ELLIOTT ELECTRIC SUPPLY
We Deliver...Lower Cost, Quality Products, & Personal Service
2310 N. Stallings Dr.
Nacogdoches, TX 75964-0
Phone: 9365697941
Fax: 9365604685

# X34S 20/25/35W LED FLOOD 3K/4K/5K KNUCKLE 120/277V

*RAB LIGHTING*

| | |
|---|---|
| Catalog Number | X34S |
| Manufacturer | RAB LIGHTING |
| Description | 35W/25W/20W KNUCKLE BRONZE 3000K/4000K/5000K SELECTABLE |
| Weight per unit | 1.2 (lbs/each) |
| Product Category | Lighting |

## Features

| | |
|---|---|
| Media | Yes |

## Descriptions

| | |
|---|---|
| Description | 20/25/35W LED FLOOD 3K/4K/5K KNUCKLE 120/277V |
| Long Description | 35W/25W/20W KNUCKLE BRONZE 3000K/4000K/5000K SELECTABLE |
| Product Type | 352520W Knuckle Bronze 3/4/5K or 277V |
| Extra Long Description | RAB X34S 352520W KNUCKLE BRONZE 3/4 |

## Manufacturer Information

| | |
|---|---|
| Brand | RAB Lighting Inc<br>Rab Lighting |
| GTIN | 00192552033121 |
| Manufacturers Part Number | X34S |
| UPC | 885360 |

## Taxonomies, Classifications, and Categories

| | |
|---|---|
| Category Description | LED FLOODLIGHTS, WALLPACKS, BOLLARDS & LANDSCAPE LIGHTING |

## Packaging

| | |
|---|---|
| Carton | 1 |
| Weight Per Each | 1.2 (lbs/each) |

# X34S



Color: Bronze

Weight: 1.2 lbs

| Project: | Type: |
|---|---|
| Prepared By: | Date: |

### Driver Info

| | |
|---|---|
| Type | Constant Current |
| 120V | 0.30A/0.22A/0.18A |
| 208V | N/A |
| 240V | N/A |
| 277V | 0.13A/0.10A/0.08A |
| Input Watts | 19.6-33.6W |

### LED Info

| | |
|---|---|
| Watts | 35/25/20W |
| Color Temp | 3000K/4000K/5000K |
| Color Accuracy | 81-84 CRI |
| L70 Lifespan | 100,000 Hours |
| Lumens | 2,685-4,677 lm |
| Efficacy | 121.5-150.9 lm/W |

## Technical Specifications

### Field Adjustability

**Field Adjustable:**
Field Adjustable Light Output:
35W/25W/20W (factory default 35W)
Color temperature selectable 3000K, 4000K and 5000K (factory default 4000K)

### Compliance

**UL Listed:**
Suitable for wet locations

**IESNA LM-79 & LM-80 Testing:**
RAB LED luminaires and LED components have been tested by an independent laboratory in accordance with IESNA LM-79 and LM-80.

**IP Rating:**
Ingress protection rating of IP65 for dust and water

**Trade Agreements Act Compliant:**
This product is a product of Cambodia and a "designated country" end product that complies with the Trade Agreements Act

**DLC Listed:**
This product is on the Design Lights Consortium (DLC) Qualified Products List and is eligible for rebates from DLC Member Utilities. Designed to meet DLC 5.1 requirements.
DLC Product Code: S-T9KEIS

### Electrical

**Driver:**
Constant Current, Class 1, 120/277V, 50/60 Hz
35W: 120V: 0.30A, 277V: 0.13A
25W: 120V: 0.22A, 277V: 0.10A
20W: 120V: 0.18A, 277V: 0.08A

**THD:**
35W: 4.3% at 120V, 8.2% at 277V
25W: 5.0% at 120V, 16.8% at 277V
20W: 6.1% at 120V, 20.5% at 277V

**Power Factor:**
35W: 99.7% at 120V, 96.2% at 277V
25W: 99.7% at 120V, 91.7% at 277V
20W: 99.4% at 120V, 90.6% at 277V

**Surge Protection:**
2kV

### Optical

**NEMA Type:**
NEMA Beam Spread of 7H x 7V

### LED Characteristics

**LEDs:**
Long-life, high-efficacy, surface-mount LEDs

**Color Uniformity:**
RAB's range of Correlated Color Temperature follows the guidelines of the American National Standard for Specifications for the Chromaticity of Solid State Lighting (SSL) Products, ANSI C78.377-2017.

### Performance

**Lifespan:**
100,000-Hour LED lifespan based on IES LM-80 results and TM-21 calculations

**Wattage Equivalency:**
35W: Replaces up to 150W Metal Halide (MH) or 100W High Pressure Sodium (HPS)
25W: Replaces up to 100W Metal Halide (MH) or 70W High Pressure Sodium (HPS)
20W: Replaces up to 100W Metal Halide (MH) or 70W High Pressure Sodium (HPS)

### Construction

**Cold Weather Starting:**
The minimum starting temperature is -40°C (-40°F)

**Maximum Ambient Temperature:**
Suitable for use in up to 40°C (104°F)

**Housing:**
Die-cast aluminum


Copyright © 2024 RAB Lighting All Rights Reserved Note: Specifications are subject to change at any time without notice

## Technical Specifications (continued)

**Mounting:**
Knuckle mount

**Lens:**
Glass

**Reflector:**
Polycarbonate

**Finish:**
Formulated for high durability and long-lasting color

**Green Technology:**
Mercury and UV free. RoHS-compliant components.

### Other

**Note:**
All values are typical (tolerance +/- 10%)

**5 Yr Limited Warranty:**
The RAB 5-year, limited warranty covers light output, driver performance and paint finish. RAB's warranty is subject to all terms and conditions found at rablighting.com/warranty.

**Buy American Act Compliance:**
RAB values USA manufacturing! Upon request, RAB may be able to manufacture this product to be compliant with the Buy American Act (BAA). Please contact customer service to request a quote for the product to be made BAA compliant.

## Dimensions

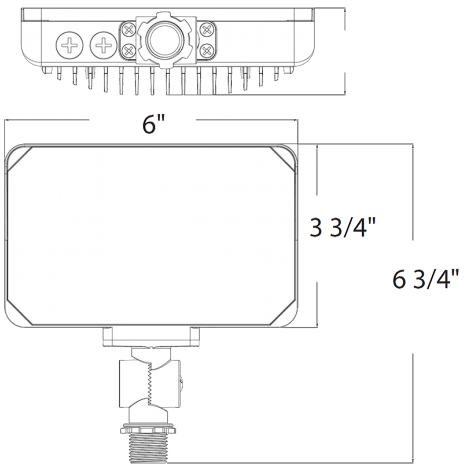


## Features

- 100,000-Hour LED lifespan
- IP65 Rated
- 5-Year, limited warranty


Copyright © 2024 RAB Lighting All Rights Reserved Note: Specifications are subject to change at any time without notice

## Ordering Matrix

| Family | Wattages | Mounting | Color Temp | Finish | Driver |
|---|---|---|---|---|---|
| X34 | S | | | | |
| | **XS =** 16/13/10W<br>**S =** 35/25/20W<br>**M =** 65/55/45W | **Blank =** Knuckle | **Blank =** 3000K/4000K/5000K CCT Adjustable | **Blank =** Bronze<br>**W =** White | **Blank =** 120V/277V |


Copyright © 2024 RAB Lighting All Rights Reserved Note: Specifications are subject to change at any time without notice