ELLIOTT ELECTRIC SUPPLY

We Deliver...Lower Cost, Quality Products, & Personal Service

2310 N. Stallings Dr.
Nacogdoches, TX 75964-0
Phone: 9365697941
Fax: 9365604685



WPLED104 104 WATT LED WALLPACK

RAB LIGHTING

Catalog Number	WPLED104
Manufacturer	RAB LIGHTING
Description	Wall Packs 14159 Lumens Wpled 104W Bronze
Weight per unit	27.1 (lbs/each)
Product Category	Led Wallpacks

Features

Voltage Rating	120/277
Wattage	104
Average Life	100000
Lumens	14159

Descriptions

Description	104 WATT LED WALLPACK
Long Description	Wall Packs 14159 Lumens Wpled 104W Bronze
Product Type	Wall PK 104W Cool 4X26W Bronze
Special Features	LED
Extra Long Description	RAB WPLED104 WALL PK 104W COOL 4X26

Manufacturer Information

Brand	Rab Lighting
	RAB Lighting Inc
GTIN	00019813041575
Manufacturers Part Number	WPLED104
UPC	885360

Taxonomies, Classifications, and Categories

Category Description	LED FLOODLIGHTS, WALLPACKS, BOLLARDS & LANDSCAPE LIGHTING
Type	Wallpack

Packaging

Carton	1
Weight Per Each	27.1 (lbs/each)

WPLED104

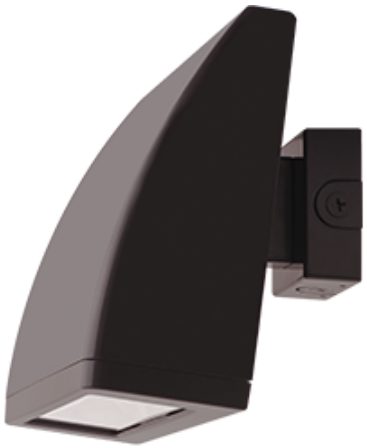

LED 104W Wall packs. 3 cutoff options. patent-pending thermal management system. 100,000 hour L70 lifespan. 5-year, no-compromise warranty.

Color: Bronze

Weight: 27.1 lbs

Project:	Type:
Prepared By:	Date:

Driver Info

Type	Constant Current
120V	0.95A
208V	0.59A
240V	0.51A
277V	0.44A
Input Watts	107.5W

LED Info

Watts	104W
Color Temp	5000K (Cool)
Color Accuracy	71 CRI
L70 Lifespan	100,000 Hours
Lumens	14,159 lm
Efficacy	131.7

Technical Specifications

Compliance

UL Listed:
UL Suitable for Wet Locations as Uplight and Downlight Wall Mount Only

IP Rating:
Ingress protection rating of IP66 for dust and water

IESNA LM-79 & LM-80 Testing:
RAB LED luminaires and LED components have been tested by an independent laboratory in accordance with IESNA LM-79 and LM-80.

DLC Listed:
This product is listed by Design Lights Consortium (DLC) as an ultra-efficient premium product that qualifies for the highest tier of rebates from DLC Member Utilities. Designed to meet DLC 5.1 requirements.
DLC Product Code: P000017B6

LED Characteristics

LEDs:
Four multi-chip, high-output, long-life LEDs

Color Consistency:
7-step MacAdam Ellipse binning to achieve consistent fixture-to-fixture color

Color Stability:
LED color temperature is warrantied to shift no more than 200K in color temperature over a 5-year period

Color Uniformity:
RAB's range of Correlated Color Temperature follows the guidelines of the American National Standard for Specifications for the Chromaticity of Solid State Lighting (SSL) Products, ANSI C78.377.2011.

Electrical

Driver:
Constant current, Class 1, 120-277V, 50/60 Hz, 4kV Surge Protection, 120V: 0.95A, 208V: 0.59A, 240V: 0.51A, 277V: 0.44A

Dimming Driver:
Driver includes dimming control wiring for 0-10V dimming systems. Requires separate 0-10V DC dimming circuit. Dims down to 10%.

THD:
5.22% at 120V, 7.4% at 277V

Power Factor:
99.7% at 120V, 92.4% at 277V

Performance

Lifespan:
100,000-Hour LED lifespan based on IES LM-80 results and TM-21 calculations

Wattage Equivalency:
Equivalent to 400W Metal Halide

Construction

Maximum Ambient Temperature:
Suitable for use in up to 40°C (104°F)

Housing:
Precision die-cast aluminum housing, door frame arm and wall bracket

Mounting:
Die-cast aluminum wall bracket with (5) 1/2" conduit openings with plugs. Two-piece bracket with tether for ease of installation and wiring.

Arm:
Die-cast aluminum with wiring access plate

Cutoff:
Standard (15°)

Lens:
Tempered glass

Copyright © 2024 RAB Lighting All Rights Reserved Note: Specifications are subject to change at any time without notice

Technical Specifications (continued)

Reflector:
Specular vacuum metallized polycarbonate

Gaskets:
High-temperature silicone

Finish:
Formulated for high durability and long-lasting color

Green Technology:
Mercury and UV free. RoHS-compliant components.

Other

Patents:
The design of the WPLED104 is protected by patents pending in US, Canada, China, Taiwan and Mexico

Warranty:
RAB warrants that our LED products will be free from defects in materials and workmanship for a period of five (5) years from the date of delivery to the end user, including coverage of light output, color stability, driver performance and fixture finish. RAB's warranty is subject to all terms and conditions found at rablighting.com/warranty.

Buy American Act Compliance:
RAB values USA manufacturing! Upon request, RAB may be able to manufacture this product to be compliant with the Buy American Act (BAA). Please contact customer service to request a quote for the product to be made BAA compliant.

Optical

BUG Rating:
B1 U2 G4

Copyright © 2024 RAB Lighting All Rights Reserved Note: Specifications are subject to change at any time without notice

Dimensions

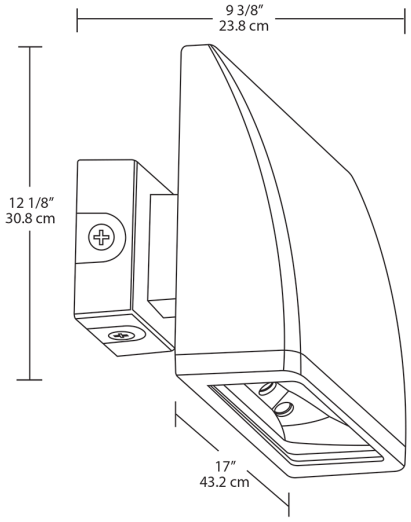

Features

- High performance LED light engine
- Maintains 70% of initial lumens at 100,000-hours
- Weatherproof high temperature silicone gaskets
- Superior heat sinking with die cast aluminum housing and external fins
- Replaces 400W MH
- 100 up to 277 Volts
- 5-Year, No-Compromise Warranty

Ordering Matrix

Family	Cutoff	Wattage	Color Temp	Finish	Driver Options	Options
WPLED		104				
	Blank = Standard (15 degrees) **C =** Cutoff (7.5 degrees) **FC =** Full Cutoff (0 degrees)	**104 =** 104W	**Blank =** 5000K Cool **N =** 4000K Neutral **Y =** 3000K Warm	**Blank =** Bronze **W =** White	**Blank =** No Option **/480 =** 480V **/BL =** Bi-Level	**Blank =** No Option **/PCS =** 120V Swivel Photocell **/PCS2 =** 277V Swivel Photocell **/PCS4 =** 480V Swivel Photocell

Copyright © 2024 RAB Lighting All Rights Reserved Note: Specifications are subject to change at any time without notice