ELLIOTT ELECTRIC SUPPLY
We Deliver...Lower Cost, Quality Products, & Personal Service
3706 Frankston Hwy
Tyler, TX 75701-0000
Phone: 9035099882
Fax: 9035099832

# WP1220C 2G VERT/HOR WP CVR

*INTERMATIC INC.*

| | |
|---|---|
| Catalog Number | WP1220C |
| Manufacturer | INTERMATIC INC. |
| Description | Weatherproof Outlet Cover, 2 Gang, 5-1/2 in (L) x 5 in (W) x 2-1/4 in (H), Horizontal Mount/Vertical Mount, Rectangular, UV Stabilized Plastic, Clear |
| Weight per unit | 0.6340 (lbs/each) |
| Product Category | Wall Plates & Covers |

## Features

| | |
|---|---|
| Cable Size | (2) 14 Gauge, (1) 12 Gauge |
| Knockouts | true |
| Material | Polycarbonate |
| Warranty | 1 |
| Insulation | True |
| Number Of Outlet | 2 |

## Dimensions and Weight

| | |
|---|---|
| Depth | 2-1/4 |

## Descriptions

| | |
|---|---|
| Construction | Heavy-Duty Polycarbonate |
| Description | 2G VERT/HOR WP CVR |
| Features | Plastic In-Use Weatherproof Covers are easy to install and include a gasket, mounting screws, base, cover assembly, and inserts to meet the needs of a variety of applications. |
| Long Description | Plastic In-Use Weatherproof Cover, Double-Gang, Vrt, 2.25" Clear |
| Product Type | Plastic In-Use Weatherproof Cover, Double-Gang, VRT, 2.25" C |
| Special Features | Features: 3 Patented Inserts For GFCI, Duplex, Toggle or Round Receptacles, Two-Gang Models Include 6 Snap-Together, Rotating, Inserts That Create 70 Combinations, Heavy-Duty Polycarbonate Construction, Clear Cover on Most Models, Pre-adhered Gasket, Meets Requirements For Cold Impact Testing -60øF (-51øC) |
| Extra Long Description | INT WP1220C Plastic In-Use Weatherp |

## Manufacturer Information

| | |
|---|---|
| Brand | Intermatic |
| GTIN | 00078275072695 |
| UPC | 683341 |

## Taxonomies, Classifications, and Categories

| | |
|---|---|
| Category Description | WEATHERPROOF BOXES & COVERS |
| Type | Weatherproof Receptacle Cover |

3706 Frankston Hwy
Tyler, TX 75701-0000
Phone: 9035099882
Fax: 9035099832

## Packaging

| | |
|---|---|
| Carton | 1 |
| Package | 6 |
| Weight Per Each | 0.6340 (lbs/each) |

## Uses, Certifications, and Standards

| | |
|---|---|
| Application | Schools, Residential, Industrial, Sports Fields, Commercial, Agricultural, Signage |
| Mounting | VERTICAL |
| Standard | 2008 NEC Article 406.8, UL Certified for Type 3R, UL/CSA Cold Impact Testing |

Project:

Location:

Product Type:

Contact/Phone:

Model #:

# WP1100C, WP1200C, WP3100C Series

The WP1100C, WP1200C, and WP3100C Series Plastic While-In-Use Covers are easy to install and shipped with gasket, mounting screws, base, and cover assembly, and patented inserts for a variety of applications.

## Features

- Complies with 2008 NEC Article 406.8(B)(1)
- 3 patented inserts for GFCI, duplex, toggle or round receptacles
- Two-gang models include 6 snap-together, rotating, inserts that create 70 combinations
- Single-gang covers mount vertically and horizontally
- Heavy-duty polycarbonate construction
- Pre-adhered gasket
- Meets requirements for cold impact testing: -60°F (-51°C)

## Ratings

| | |
|---|---|
| Cover: | Clear (white on selected surfaces) UV stabilized polycarbonate with two cord outlets ½" (12.7 mm) wide by 9⁄16" (14.2 mm) high. Models WP1150C and WP1250C – one cord outlet ¾" (19.1 mm) wide by 1 5⁄16" (33.3 mm) high |
| Mounting Base and Inserts: | Black UV stabilized polycarbonate |
| Gasket: | Neoprene – ⅛" (4.8 mm) thick with slits for mounting screws |
| Maximum Cord Size: | Two 14 gauge AWG or One 12 gauge AWG WP1250C and WP1150C: Two 14 gauge AWG or One 10 gauge AWG |
| Shipping Weight: | WP1110C - .41 lbs. (0.19 kg)<br>WP1150C/WP1230C - .75 lbs. (0.34 kg)<br>WP1220C - .72 lbs. (0.33 kg)<br>WP1250C - .9 lbs. (0.41kg) |
| Warranty: | Limited 1 year |

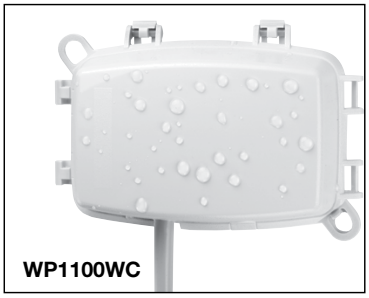
WP1100WC


WP1220C


WP1230C

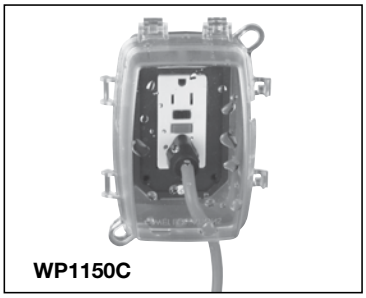
WP1150C


WP3100C

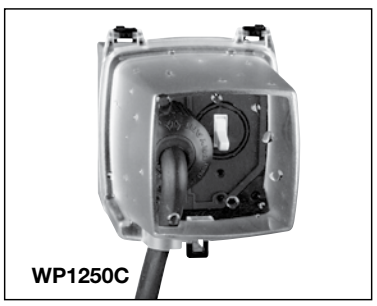
WP1250C

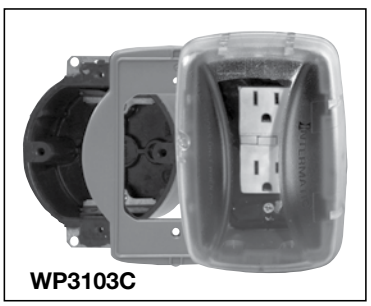
WP3103C

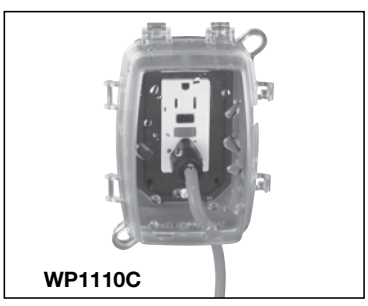
WP1110C

# WP1100C, WP1200C, WP3100C Series

| Model Number | Type | Depth (in) | Color | Cord Diameter (in) | Exit Port Length (in) | Hidden Hinges | Lockable Hasp |
|---|---|---|---|---|---|---|---|
| **WP1100WC** | Single Gang, Horizontal or Vertical (WP17) | 2 ¾ | White | .5 | .75 | No | Yes |
| **WP1110C** | Single Gang, Horizontal or Vertical (WP17) | 3 ⅝ | Clear | .5 | .75 | No | Yes |
| **WP1150C** | Single Gang, Horizontal or Vertical (WP17) | 4 ¾ | Clear | .8 | 1.27 | No | Yes |
| **WP1220C** | Two Gang (WP217) | 2 ¼ | Clear | .5 | .75 | No | No |
| **WP1230C** | Two Gang (WP217) | 3 ⅛ | Clear | .5 | .75 | No | No |
| **WP1250C** | Two Gang (WP217) | 4 ¾ | Clear | .8 | 1.27 | No | Yes |
| **WP3100C** | Single Gang, Horizontal or Vertical (WP17) | 2 ¾ | Clear | .5 | .97 | Yes | Yes |
| **WP3103C** | 3/0 Adapter Plate for 3” Round Box Applications, Single Gang, Horizontal or Vertical (WP17) | 2 ¾ | Clear | .5 | .97 | Yes | Yes |

## Specification

The weatherproof cover (WP1100C/WP3100C) shall be designed to mount on a single gang horizontal or vertical junction box to ensure weather protection for a standard receptacle. The cover shall mount on indoor or outdoor junction boxes and shall include a weatherproof cover/base assembly, a gasket, two universal inserts, and mounting hardware. The weatherproof cover shall include two inserts to provide flexibility in installation. The outlet cover shall meet UL requirements for wet locations. The weatherproof cover shall be designed to meet requirements of 2008 NEC Article 406.8(B)(1) and shall be NEMA 3R rated. The weatherproof cover shall be constructed entirely of UV stabilized high impact polycarbonate material. The cover, which encloses the cord set, shall be clear to allow visual inspection. The cover shall meet agency requirements for cold impact at -60°F (-51°C). The cover shall provide a useable inside depth of _____ (2 ¼")(3 ⅛")(4 ⅝"). The weatherproof cover shall be Intermatic model _____ (See Model Numbers Listed).

## Specification

The weatherproof cover (WP1200C) shall be designed to mount on a two gang junction box to ensure weather protection for a standard receptacle. The cover shall mount on indoor or outdoor junction boxes and shall include a weatherproof cover/base assembly, a gasket, six universal inserts, and mounting hardware. The inserts must provide flexibility for mounting at any angle including: 90°, 180°, or 270°. The outlet cover shall meet UL requirements for wet locations. The weatherproof cover shall be designed to meet requirements of 2008 NEC Article 406.8(B)(1) and shall be NEMA 3R rated. The weatherproof cover and base shall be constructed entirely of UV stabilized polycarbonate material. The cover, which encloses the cord set, shall be clear to allow visual inspection. The cover shall meet agency requirements for cold impact at -60°F (-51°C). The cover shall provide a useable inside depth of _____(2 ¼")(3 ⅛") (4 ⅝"). The Weatherproof cover shall be Intermatic model _____ (See Model Numbers Listed).

## Diagrams

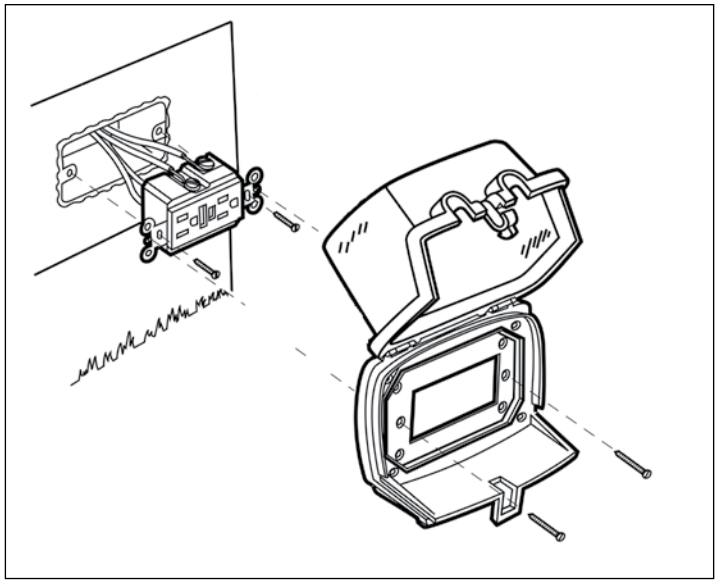

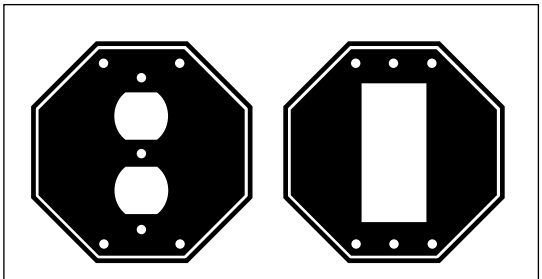

WP217 Inserts

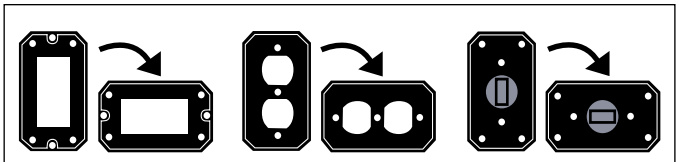

WP17 Inserts