ELLIOTT ELECTRIC SUPPLY
We Deliver...Lower Cost, Quality Products, & Personal Service
2310 N. Stallings Dr.
Nacogdoches, TX 75964-0
Phone: 9365697941
Fax: 9365604685

W34S 17W/25W/35W LED WALL PACK 3K/4K/5K - SMALL

RAB LIGHTING

Catalog Number	W34S
Manufacturer	RAB LIGHTING
Description	WALLPACK SMALL FA 35/25/17W 3000K/4000K/5000K120-277V JUNCTION BOX BRONZE
Weight per unit	6.2 (lbs/each)
Product Category	Lighting

Features

Media	Yes

Descriptions

Description	17W/25W/35W LED WALL PACK 3K/4K/5K - SMALL
Long Description	WALLPACK SMALL FA 35/25/17W 3000K/4000K/5000K120-277V JUNCTION BOX BRONZE
Product Type	Wallpack Small 35/25/17W 5/4/3K JB BZ
Extra Long Description	RAB W34S WALLPACK SMALL 35/25/17W 5

Manufacturer Information

Brand	RAB Lighting Inc Rab Lighting
GTIN	00192552028295
Manufacturers Part Number	W34S
UPC	885360

Taxonomies, Classifications, and Categories

Category Description	LED FLOODLIGHTS, WALLPACKS, BOLLARDS & LANDSCAPE LIGHTING

Packaging

Carton	1
Weight Per Each	6.2 (lbs/each)

W34S



Color: Bronze

Weight: 6.6 lbs

Project:	Type:
Prepared By:	Date:

Driver Info

Type	Constant Current
120V	0.30A/0.21A/0.15
208V	0.17A/0.13A/0.09A
240V	0.15A/0.11A/0.08A
277V	0.13A/0.09A/0.07A
Input Watts	18.7-39.1W

LED Info

Watts	35/25/17W
Color Temp	3000K/4000K/5000K
Color Accuracy	73-75 CRI
L70 Lifespan	100,000 Hours
Lumens	2,728-5,574 lm
Efficacy	131.3-153 lm/W

Technical Specifications

Field Adjustability

Field Adjustable:
Field Adjustable Light Output:
35W/25W/17W (factory default 35W)
Color temperature selectable by 5000K, 4000K and 3000K

Compliance

UL Listed:
Suitable for wet locations

Trade Agreements Act Compliant:
This product is a product of Cambodia and a "designated country" end product that complies with the Trade Agreements Act

DLC Listed:
This product is listed by Design Lights Consortium (DLC) as an ultra-efficient premium product that qualifies for the highest tier of rebates from DLC Member Utilities. Designed to meet DLC 5.1 requirements.
DLC Product Code: S-4S68AI

Electrical

Driver:
Constant Current, Class 2, 120-277V, 50/60Hz:
35W: 120V: 0.30A, 208V: 0.17A, 240V: 0.15A, 277V: 0.13A
25W: 0.21A, 208V: 0.13A, 240V: 0.11A, 277V: 0.09A
17W: 120V: 0.15A, 208V: 0.09A, 240V: 0.08A, 277V: 0.07A

Dimming Driver:
Driver includes dimming control wiring for 0-10V dimming systems. Requires separate 0-10V DC dimming circuit. Dims down to 10%.

THD:
2.85% at 120V, 6.55% at 277V

Power Factor:
99.5% at 120V, 92% at 277V

Photocell:
Integrated photocell included with on/off switch

Performance

Lifespan:
100,000-Hour LED lifespan based on IES LM-80 results and TM-21 calculations

Wattage Equivalency:
35W: Replaces up to 175W Metal Halide or 150W High Pressure Sodium
25W: Replaces up to 125W Metal Halide or 100W High Pressure Sodium
17W: Replaces up to 100W Metal Halide or 70W High Pressure Sodium

LED Characteristics

LEDs:
Long-life, high-efficacy, surface-mount LEDs

Color Uniformity:
RAB's range of Correlated Color Temperature follows the guidelines of the American National Standard for Specifications for the Chromaticity of Solid State Lighting (SSL) Products, ANSI C78.377-2017.

Construction

Housing:
Die-cast aluminum

Lens:
Glass

Reflector:
Specular aluminum

Cold Weather Starting:
The minimum starting temperature is -40°C (-40°F)

Maximum Ambient Temperature:
Suitable for use in up to 40°C (104°F)

Mounting:
Die-cast backbox with four (4) conduit entry points and knockout pattern for junction box or direct wall mounting. Hinged door for easy re-assembly.

Green Technology:
Mercury and UV free. RoHS-compliant components.

Copyright © 2024 RAB Lighting All Rights Reserved Note: Specifications are subject to change at any time without notice

Technical Specifications (continued)

Finish:
Formulated for high durability and long-lasting color

Optical

BUG Rating:
35W: B0 U3 G3
25W: B0 U3 G2
17W: B0 U2 G2

Other

5 Yr Limited Warranty:
The RAB 5-year, limited warranty covers light output, driver performance and paint finish. RAB's warranty is subject to all terms and conditions found at rablighting.com/warranty.

Note:
All values are typical (tolerance +/- 10%)

Buy American Act Compliance:
RAB values USA manufacturing! Upon request, RAB may be able to manufacture this product to be compliant with the Buy American Act (BAA). Please contact customer service to request a quote for the product to be made BAA compliant.

Dimensions

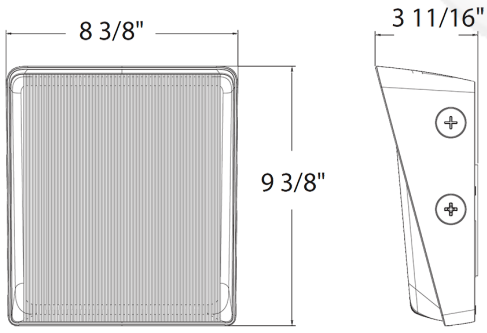

Features

- 100,000-Hour LED lifespan
- 0-10V dimming standard
- 5-Year, limited warranty

Copyright © 2024 RAB Lighting All Rights Reserved Note: Specifications are subject to change at any time without notice

Ordering Matrix

Family	Size (Wattages)	Color Temp	Finish	Voltage	Options
W34	S				
	S = Small (35/25/17W) **M =** Medium (80/60/40W) **L =** Large (150/100/75W)	**Blank =** 3000K/4000K/5000K CCT Adjustable	**Blank =** Bronze	**Blank =** 120-277V, 0-10V Dimming	**Blank =** Integrated Photocell

Copyright © 2024 RAB Lighting All Rights Reserved Note: Specifications are subject to change at any time without notice