ELLIOTT ELECTRIC SUPPLY
We Deliver...Lower Cost, Quality Products, & Personal Service
2310 N. Stallings Dr.
Nacogdoches, TX 75964-0
Phone: 9365697941
Fax: 9365604685



W3470L *DELISTED* 69W LED WALL PACK 5K 7188LM - MEDIUM

RAB LIGHTING

Catalog Number	W3470L
Manufacturer	RAB LIGHTING
Description	RAB W34-70L WP 69W 7200LM LED UNIV
Weight per unit	10.3 (lbs/each)
Product Category	Led Wallpacks

Features

Voltage Rating	120/277
Wattage	69
Average Life	50000
Lumens	7188

Descriptions

Description	*DELISTED* 69W LED WALL PACK 5K 7188LM - MEDIUM
Long Description	RAB W34-70L WP 69W 7200LM LED UNIV
Product Type	WP 69W 7200LM Led Univ 5K 80 Cri BZ

Manufacturer Information

Brand	RAB Lighting Inc
GTIN	00019813833200
Manufacturers Part Number	W34-70L
UPC	885360

Taxonomies, Classifications, and Categories

Category Description	LED FLOODLIGHTS, WALLPACKS, BOLLARDS & LANDSCAPE LIGHTING
Type	Wallpack

Availability

Manufacturer Status	Inactive

Packaging

Carton	1
Weight Per Each	10.3 (lbs/each)

W34-70L



Ultra-economy wall pack with traditional look.

Color: Bronze

Weight: 10.3 lbs

Project:	**Type:**
Prepared By:	**Date:**

Driver Info

Type	Constant Current
120V	0.58A
208V	0.34A
240V	0.29A
277V	0.25A
Input Watts	68.1W

LED Info

Watts	69W
Color Temp	5000K (Cool)
Color Accuracy	84 CRI
L70 Lifespan	50,000 Hours
Lumens	8,676
Efficacy	127.4 lm/W

Technical Specifications

Compliance

UL Listed:

Suitable for wet locations. Suitable for mounting within 4 feet of the ground.

DLC Listed:

This product is on the Design Lights Consortium (DLC) Qualified Products List and is eligible for rebates from DLC Member Utilities.
DLC Product Code: PAMBNJRA

Performance

Lifespan:

50,000-Hour LED lifespan based on IES LM-80 results and TM-21 calculations

Electrical

Driver:

Constant Current, Class 2, 120-277V, 50/60Hz, 120V: 0.58A, 208V: 0.34A, 240V: 0.29A, 277V: 0.25A

THD:

6.8% at 120V, 7.92% at 277V

Power Factor:

99.6% at 120V, 96.7% at 277V

Note:

All values are typical (tolerance +/- 10%)

LED Characteristics

LEDs:

Long-life, high-efficacy, surface-mount LEDs

Color Uniformity:

RAB's range of Correlated Color Temperature follows the guidelines of the American National Standard for Specifications for the Chromaticity of Solid State Lighting (SSL) Products, ANSI C78.377-2017.

Construction

Housing:

Die-cast aluminum

Lens:

Glass

Reflector:

Specular aluminum

Cold Weather Starting:

Minimum starting temperature is -40°C (-40°F)

Maximum Ambient Temperature:

Suitable for use in up to 40°C (104°F)

Copyright © 2021 RAB Lighting All Rights Reserved Note: Specifications are subject to change at any time without notice

Technical Specifications (continued)

Construction

Mounting:

Die-cast backbox with four (4) conduit entry points and knockout pattern for junction box or direct wall mounting. Hinged door for easy re-assembly.

Green Technology:

Mercury and UV free. RoHS-compliant components.

Finish:

Formulated for high durability and long-lasting color

Other

Replacement:

Replaces up to 250W Metal Halide

Equivalency:

Equivalent to 200W Metal Halide

5 Yr Limited Warranty:

The RAB 5-year, limited warranty covers light output, driver performance and paint finish. RAB's warranty is subject to all terms and conditions found at rablighting.com/warranty.

Trade Agreements Act Compliant:

This product is a product of Cambodia and a "designated country" end product that complies with the Trade Agreements Act

Buy American Act Compliance:

RAB values USA manufacturing! Upon request, RAB may be able to manufacture this product to be compliant with the Buy American Act (BAA). Please contact customer service to request a quote for the product to be made BAA compliant.

Dimensions

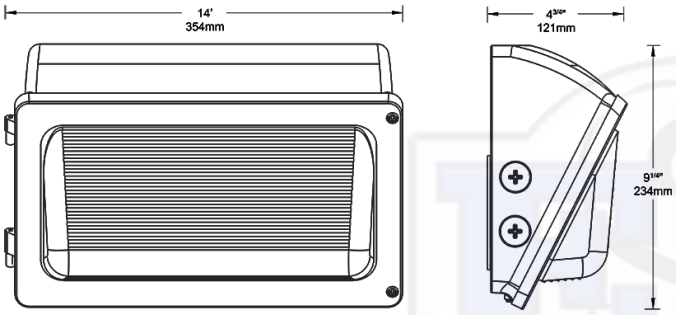

Features

- Economy-grade wall pack with traditional look
- Covers footprint of medium-sized HID wall packs
- Available in various lumen packages
- Integrated 0-10V dimming
- 50,000-Hour LED lifespan

Ordering Matrix

Family		Lumen Package		CRI/Color Temp	Voltage	Options
W34	–	70L	–			
		55L = 6,500lm, 51W **70L =** 8,500lm, 69W **90L =** 10,000lm, 87W		**Blank =** 80 CRI / 5000K **840 =** 80 CRI / 4000K **830 =** 80 CRI / 3000K	**Blank =** 120-277V, 0-10V Dimming **/480 =** 480V, 0-10V Dimming	**Blank =** No Option **/PCU =** 120-277V Button Photocell **/MVS =** Microwave Motion Sensor **/LC =** 120-277V Lightcloud® Controller

All values are nominal with +/- 10% tolerance. See spec sheet for more details.

Copyright © 2021 RAB Lighting All Rights Reserved Note: Specifications are subject to change at any time without notice