ELLIOTT ELECTRIC SUPPLY
We Deliver...Lower Cost, Quality Products, & Personal Service
2310 N. Stallings Dr.
Nacogdoches, TX 75964-0
Phone: 9365697941
Fax: 9365604685



VXLED13DG 13W LED VPRPRF 50K CLNG MNT FRST GLOBE

RAB LIGHTING

Catalog Number	VXLED13DG
Manufacturer	RAB LIGHTING
Description	Vaporproof 729 Lumens Led 13W Ceiling Frosted Globeglobe Diecast Guard
Weight per unit	5.1 (lbs/each)
Product Category	Led Vapor Tight Lighting

Features

Voltage Rating	120/277
Wattage	13

Descriptions

Description	13W LED VPRPRF 50K CLNG MNT FRST GLOBE
Long Description	Vaporproof 729 Lumens Led 13W Ceiling Frosted Globeglobe Diecast Guard
Product Type	Vaporproof 13W Ceiling FR GL GL
Extra Long Description	RAB VXLED13DG VAPORPROOF 13W CEILIN

Manufacturer Information

Brand	RAB Lighting Inc Rab Lighting
GTIN	00019813028330
Manufacturers Part Number	VXLED13DG
UPC	885360

Taxonomies, Classifications, and Categories

Category Description	LED HAZARDOUS LOCATION & VAPOR TIGHT LIGHTING
Type	INDUSTRIAL

Packaging

Carton	1
Weight Per Each	5.1 (lbs/each)

Uses, Certifications, and Standards

Application	Indoor
Mounting	CEILING

VXLED13DG



High performance LED Vaporproof fixture. A classic design with cutting edge LED technology. Comes with die cast guard and frosted globe.

Color: Natural

Weight: 5.1 lbs

Project:	Type:
Prepared By:	Date:

Driver Info

Type	Constant Current
120V	0.13A
208V	0.08A
240V	0.07A
277V	0.06A
Input Watts	15.1W

LED Info

Watts	13W
Color Temp	5000K (Cool)
Color Accuracy	65 CRI
L70 Lifespan	100,000 Hours
Lumens	729 lm
Efficacy	48.3 lm/W

Technical Specifications

Performance

Lifespan:
100,000-Hour LED lifespan based on IES LM-80 results and TM-21 calculations

Construction

Temperature:
The VXLED is rated for 40°C maximum ambient and -30°C minimum cold starting temperatures

Globes and Guards:
Vaporproof LEDs are compatible with RAB Globes and Guards

Construction:
Die cast aluminum housing and door. Tether connects back housing halves for safety.

Cold Weather Starting:
The minimum starting temperature is -40°C (-40°F)

Ambient Temperature:
Suitable for use in up to 35°C (95°F)

Housing:
Die-cast aluminum housing and driver housing

Mounting:
Three 1/2" NPS conduit entry points

Guard and Globe:
Shot blasted guard with frosted globe

Reflector:
High quality hydroformed semi-specular aluminum

Gaskets:
High-temperature Silicone

Finish:
Natural shot blasted aluminum

Green Technology:
Mercury and UV free. RoHS-compliant components.

Electrical

Driver:
Multi-chip single 13W high output long life LED Driver. Constant Current,100V-277V, 50/60 Hz., 100-240VAC.3-.15 Amps 277VAC.15 Amps. Will deliver 70% of its initial lumens at 100,000 hours based onlm-80 Tests.

Surge Protection:
4kV

Compliance

IESNA LM-79 & LM-80 Testing:
RAB LED luminaires and LED components have been tested by an independent laboratory in accordance with IESNA LM-79 and LM-80.

UL Listed:
UL Listed Suitable for Wet locations as a Downlight

LED Characteristics

Color Consistency:
7-step MacAdam Ellipse binning to achieve consistent fixture-to-fixture color

Color Stability:
LED color temperature is warrantied to shift no more than 200K in color temperature over a 5-year period

Color Uniformity:
RAB's range of Correlated Color Temperature follows the guidelines of the American National Standard for Specifications for the Chromaticity of Solid State Lighting (SSL) Products, ANSI C38.377-2011.

Other

Warranty:
RAB warrants that our LED products will be free from defects in materials and workmanship for a period of five (5) years from the date of delivery to the end user, including coverage of light output, color stability, driver performance and fixture finish. RAB's warranty is subject to all terms and conditions found at rablighting.com/warranty.

Copyright © 2024 RAB Lighting All Rights Reserved Note: Specifications are subject to change at any time without notice

Technical Specifications (continued)

Patents:
The VXLED a design is protected by patents in the U.S. Pat. D653,795, Taiwan Pat. D150462, and pending in Canada, China, and Mexico.

Buy American Act Compliance:
RAB values USA manufacturing! Upon request, RAB may be able to manufacture this product to be compliant with the Buy American Act (BAA). Please contact customer service to request a quote for the product to be made BAA compliant.

Optical

BUG Rating:
B0 U3 G1

Dimensions

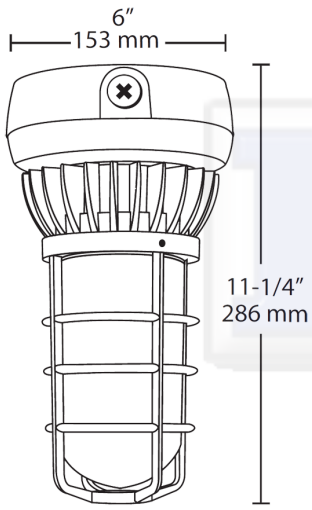

Features

- Vaporproof LED Ceiling Mount
- Superior Thermal Management (Patent Pending)
- All Die-Cast Aluminum Construction
- 100,000-hour life based on LM-80 results and TM-21 calculations
- Thermal Shock-Resistant Frosted Glass Globe
- Traditional Look, Cutting-Edge Technology
- 5-Year, No-Compromise Warranty

Copyright © 2024 RAB Lighting All Rights Reserved Note: Specifications are subject to change at any time without notice