ELLIOTT ELECTRIC SUPPLY
We Deliver...Lower Cost, Quality Products, & Personal Service
2310 N. Stallings Dr.
Nacogdoches, TX 75964-0
Phone: 9365697941
Fax: 9365604685



VDV226110 RATCHETING CABLE CRIMPER/STRIPPER/CUTTER

KLEIN TOOLS

Catalog Number	VDV226110
Manufacturer	KLEIN TOOLS
Description	Klein Tools Coax Cable Crimper / Wire Stripper / Wire Cutter is a premium, long lasting tool for CAT3, CAT5e and CAT6/6A cable using RJ11/RJ12 standard and RJ45 Pass-Thru™ connectors. Pass-Thru™ technology significantly reduces prep work time wiring diagram on the tool helps eliminate rework and wasted materials. Compact, non-slip comfort grip reduces hand strain and stores easily. For use with Klein Pass-Thru™ Connectors (in packs of 10, 50 or 200).
Weight per unit	0.9000 (lbs/each)
Product Category	Wire & Cable Crimpers

Features

Cable Size	CAT3, CAT5e, CAT6/6A
Cable Type	CAT3, CAT5e, CAT6/6A
Connector Type	RJ45 Klein Tools Pass-Thru™, and RJ11, RJ12 Standard
Material	Steel
Media	Yes

Material, Color, and Finish

Handle Color	Black;Yellow

Dimensions and Weight

Overall Length	6.094

ELLIOTT ELECTRIC SUPPLY
We Deliver...Lower Cost, Quality Products, & Personal Service
2310 N. Stallings Dr.
Nacogdoches, TX 75964-0
Phone: 9365697941
Fax: 9365604685

Descriptions

Description	RATCHETING CABLE CRIMPER/STRIPPER/CUTTER
Features	Klein Tools Coax Cable Crimper / Wire Stripper / Wire Cutter is a premium, long lasting tool for CAT3, CAT5e and CAT6/6A cable using RJ11/RJ12 standard and RJ45 Pass-Thru™ connectors. Pass-Thru™ technology significantly reduces prep work time wiring diagram on the tool helps eliminate rework and wasted materials. Compact, non-slip comfort grip reduces hand strain and stores easily. For use with Klein Pass-Thru™ Connectors (in packs of 10, 50 or 200).
Long Description	Klein Tools Coax Cable Crimper / Wire Stripper / Wire Cutter is a premium, long lasting tool for CAT3, CAT5e and CAT6/6A cable using RJ11/RJ12 standard and RJ45 Pass-Thru™ connectors. Pass-Thru™ technology significantly reduces prep work time wiring diagram on the tool helps eliminate rework and wasted materials. Compact, non-slip comfort grip reduces hand strain and stores easily. For use with Klein Pass-Thru™ Connectors (in packs of 10, 50 or 200).
Product Type	Pass-Thru™ Modular Crimper
Extra Long Description	KLE VDV226-110 Pass-Thru™ Modular C

Manufacturer Information

Brand	Klein Tools
GTIN	00092644690945
Manufacturers Part Number	VDV226-110
UPC	783523

Taxonomies, Classifications, and Categories

Category Description	HAND TOOLS
Type	Crimper

Packaging

Carton	1
Package	3
Weight	14.4 oz (408 g)
Weight Per Each	0.9000 (lbs/each)

Uses, Certifications, and Standards

Application	Cable Connection

PASS-THRU™
CONNECTORS AND CRIMPERS

Now with CAT6A UTP and STP Connectors for CAT6A cable and larger diameter/thicker jacket CAT6 cable



CAT6/6A CONNECTORS FULLY COMPLIANT WITH PoE AND PoE+ STANDARDS

KLEIN TOOLS®

PASS-THRU™ CONNECTORS

Klein-designed Pass-Thru™ Connectors provide fast, reliable connector installations for voice and data applications. Cable easily passes through connector for consistent and secure terminations.

- 8 position, 8 contact pass-through type data plugs for solid or stranded wire

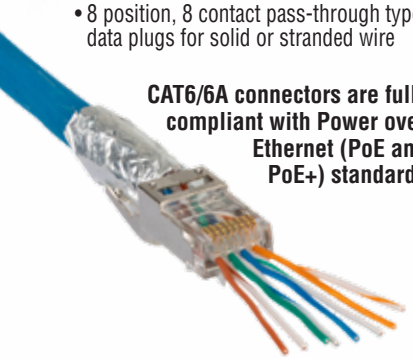

CAT6/6A connectors are fully compliant with Power over Ethernet (PoE and PoE+) standards



CAT5e



CAT6



CAT6A UTP



CAT6A STP

Cable Type	Cat. No.	UPC 0-92644+	Pack Size
CAT5e	**VDV826-728**	69097-6	10
	VDV826-702	69082-2	50
	VDV826-762	69188-1	200
CAT6	**VDV826-729**	69092-1	10
	VDV826-703	69093-8	50
	VDV826-763	69189-8	200
NEW CAT6A UTP*	**VDV826-704**	58378-0	50
	VDV826-764	58379-7	200
NEW CAT6A STP**	**VDV826-705**	58391-9	50
	VDV826-754	58392-6	100

* Unshielded Twisted Pair **Shielded Twisted Pair

PASS-THRU™ CRIMPERS

Pass-Thru technology significantly reduces prep work time, with flush cut wire trimming blades. Klein offers modular crimp-connector installation tools for voice and data applications with Pass-Thru RJ45 connector plugs.

Ratcheting Modular Crimper

VDV226-110

- Cuts, strips, crimps and trims twisted pair cable (STP/UTP)
- Crimps 4, 6 and 8 position modular connectors
  - RJ11/RJ12 standard
  - RJ45 Klein Tools Pass-Thru™
- Full-cycle ratchet mechanism ensures complete connector termination
- 2,000+ cuts from durable, heat-treated blades



VDV226-110

- On-tool wiring diagram helps eliminate rework and wasted materials
- Use with Klein Tools Pass-Thru™ Connectors
- Not for use with standard (non Pass-Thru™) connectors
- Replacement blades available

Compact Modular Crimper

VDV226-005

- Crimps and trims Klein Tools RJ45 Pass-Thru™ connectors onto paired-conductor cables (round STP/UTP cables)



VDV226-005

Cat. No.	UPC 0-92644+	Description	Cable Type	Connector Type	Position/Pair/Conductors
VDV226-110	69094-5	Pass Thru™ Ratcheting Modular Crimper	CAT5e, CAT6/6A	RJ45 Klein Tools Pass-Thru™	8-Position, 4-Pair/8-Conductor
VDV226-005	58287-5	Pass-Thru™ Compact Crimper			
VDV999-076	69112-6	Replacement Blade Kit for VDV226-110			
VDV999-078	58332-2	Replacement Blade Kit for VDV226-005			

⚠ Visit www.kleintools.com for warnings and instructions.

See our complete line of **Pass-Thru™ Connectors, Crimpers and Accessories**
www.kleintools.com

For Professionals
SINCE 1857™

KLEIN TOOLS®

© 2021 Klein Tools, Inc.
Lincolnshire, IL 60069
82979 Rev. 06/21 A