ELLIOTT ELECTRIC SUPPLY

We Deliver...Lower Cost, Quality Products, & Personal Service

2310 N. Stallings Dr.
Nacogdoches, TX 75964-0
Phone: 9365697941
Fax: 9365604685



STL110LED 300W 120V LED MTN SENSOR

RAB LIGHTING

Catalog Number	STL110LED
Manufacturer	RAB LIGHTING
Description	LED MTN Sensor, Black, 50 ft Coverage Area, 5 L x 3-1/2 W x 5 H Dimensions, For Use With Raintight Photoelectric Switch, Made in USA, 1 W Power Rating, Mains Power Source, LED MTN Sensor Sensor Type, 50' x 100° Detection Pattern Special Features, cULus Listed;I.E.C Specs, 5:12 Sec Time Delay, 100 ° Viewing Angle, 120 V Voltage Rating, 1.1 lb Weight
Weight per unit	0.9300 (lbs/each)
Product Category	Motion Sensing Devices

Descriptions

Description	300W 120V LED MTN SENSOR
Long Description	Outdoor Sensors Stealth 110 Sensor 300W Max 120V Led Bronze
Product Type	Stealth 110 Senr 120V 300W Max BZ
Extra Long Description	RAB STL110-LED STEALTH 110 SENR 120

Manufacturer Information

Brand	RAB Lighting Inc
GTIN	00019813498935
Manufacturers Part Number	STL110-LED
UPC	885360

Taxonomies, Classifications, and Categories

Category Description	Commercial dimmers, motion sensors, & photo cells

Packaging

Carton	1
Weight Per Each	0.9300 (lbs/each)

STL110-LED



STEALTH Sensor with 110° view. Double Look Down lens, surge protection, LED detection indicator and Color Matched Lens.

Color: Bronze

Weight: 0.9 lbs

Project:	Type:
Prepared By:	Date:

Technical Specifications

Compliance

UL Listed:
Raintight Photoelectric Switch

Electrical

Switching Capacity:
8 amps

Voltage:
120V
300W LED

Surge Protection:
I.E.C specs

Sensor Specifications

Detection Pattern:
50' x 100°

Time Adjustment:
5 seconds to 12 minutes

Power Consumption:
1 watt

Other

Warranty:
10-year sensor warranty

Buy American Act Compliance:
RAB values USA manufacturing! Upon request, RAB may be able to manufacture this product to be compliant with the Buy American Act (BAA). Please contact customer service to request a quote for the product to be made BAA compliant.

Copyright © 2024 RAB Lighting All Rights Reserved Note: Specifications are subject to change at any time without notice

Dimensions

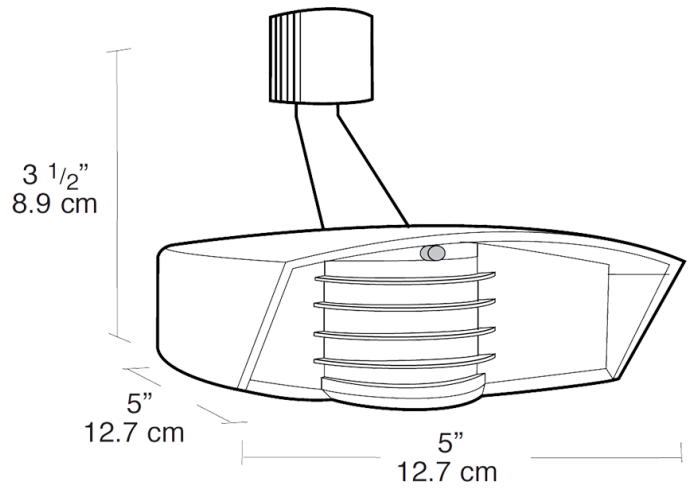

Features

- Compatible with LED lamps
- Temperature compensation
- Radio frequency immunity
- 6000 volt surge protection
- LED detection & "on guard" indicator
- Color matched vandal resistant lens and grill
- Protected manual override with auto reset
- Can be wired in parallel

Copyright © 2024 RAB Lighting All Rights Reserved Note: Specifications are subject to change at any time without notice