ELLIOTT ELECTRIC SUPPLY
We Deliver...Lower Cost, Quality Products, & Personal Service
2310 N. Stallings Dr.
Nacogdoches, TX 75964-0
Phone: 9365697941
Fax: 9365604685



# STL110 1000W 120V STEALTH 110 SENSOR BRONZE

*RAB LIGHTING*

| | |
|---|---|
| Catalog Number | STL110 |
| Manufacturer | RAB LIGHTING |
| Description | Stealth 110 Sensor, Bronze, 110 ° Coverage, Wall Mount, 120 V, 8 A, Motion Sensor, Adjustment, 5 sec to 12 min Time Delay, 1.10 lb |
| Weight per unit | 0.9300 (lbs/each) |
| Product Category | Lighting Sensors |

## Features

| | |
|---|---|
| Wattage | 1000 |

## Descriptions

| | |
|---|---|
| Description | 1000W 120V STEALTH 110 SENSOR BRONZE |
| Long Description | Outdoor Sensors Stealth 110 Sensor 1000W 120V Bronze |
| Product Type | Stealth 110 Senr 1000W 120V Bronze |
| Special Features | NONFIXTURE |
| Extra Long Description | RAB STL110 STEALTH 110 SENR 1000W 1 |

## Manufacturer Information

| | |
|---|---|
| Brand | RAB Lighting Inc |
| GTIN | 00019813601700 |
| UPC | 885360 |

## Taxonomies, Classifications, and Categories

| | |
|---|---|
| Category Description | Commercial dimmers, motion sensors, & photo cells |
| Type | SENSOR |

## Packaging

| | |
|---|---|
| Carton | 1 |
| Weight | 1.10 |
| Weight Per Each | 0.9300 (lbs/each) |

## Uses, Certifications, and Standards

| | |
|---|---|
| Application | Outdoor |
| Mounting | CEILING |
| Standard | 110 degree detection |

# STL110



STEALTH Sensor with 110° view. Double Look Down lens, surge protection, LED detection indicator and Color Matched Lens.

Color: Bronze

Weight: 0.9 lbs

| Project: | Type: |
|---|---|
| Prepared By: | Date: |

## Technical Specifications

### Compliance

**UL Listed:**
Suitable for wet locations

### Electrical

**Power Consumption:**
1W

**Surge Protection:**
Withstands up to 6000 volts

**Wall Switch Manual Override:**
Two flip logic prevents activation by momentary power outages. Override resets to auto at dawn. No extra wiring needed.

**RF Immunity:**
Circuits fully shielded for maximum radio frequency immunity

**Voltage:**
120V AC 60 Hertz

**Switching Capacity:**
1000W incandescent @ 120 volts, 8 amps

### Sensor Specifications

**Time Adjustment:**
5 seconds to 12 minutes

**Wide Sensitivity Control:**
Adjustable from 100% to 30%

**Advanced Detection Logic:**
Minimizes false triggers

**Photoelectric Control:**
Deactivates lights during daylight. Fully adjustable for 24 hour operation or custom applications.

**Detection:**
Angle of view = 110°
Recommended Mounting Height = 10'-0"
Maximum Recommended Look-Out Zone = 50'-0"

### Construction

**Temperature Compensation:**
Sensitivity adjusts automatically for consistent detection in hot and cold ambient temperatures

**Horizontal Lock, No-tool Joints:**
Keeps sensing pattern level for fast, error-free installation

**Floodlights:**
Precision die cast aluminum. 1/2" NPS threaded arm with serrated locking swivel fits all standard mounting boxes and covers.

### LED Characteristics

**LED Detection Indicator:**
Shows when sensor is detecting in daytime and glows red at night for "on-guard" deterrence

**Color Matched Lens:**
Dark lens with bronze units, white lens with white units

### Other

**Warranty:**
10-year sensor warranty

**Buy American Act Compliance:**
RAB values USA manufacturing! Upon request, RAB may be able to manufacture this product to be compliant with the Buy American Act (BAA). Please contact customer service to request a quote for the product to be made BAA compliant.


Copyright © 2024 RAB Lighting All Rights Reserved Note: Specifications are subject to change at any time without notice

## Dimensions

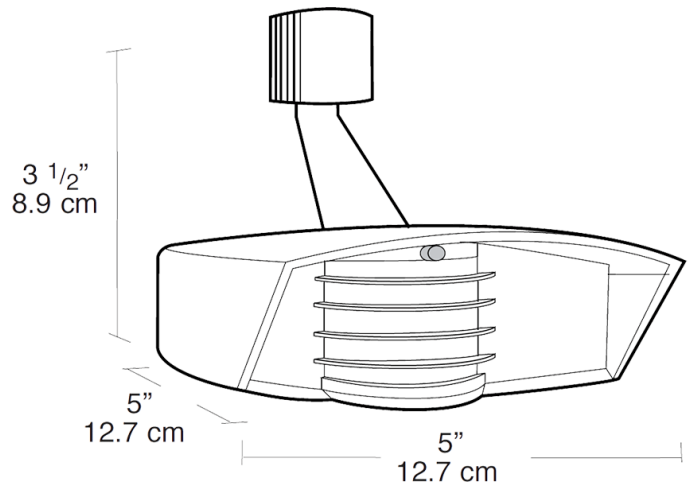


## Features

- Temperature compensation
- Radio frequency immunity
- 6000 volt surge protection
- LED detection & "on guard" indicator
- Color matched vandal resistant lens and grill
- Protected manual override with auto reset
- Can be wired in parallel


Copyright © 2024 RAB Lighting All Rights Reserved Note: Specifications are subject to change at any time without notice