ELLIOTT ELECTRIC SUPPLY
We Deliver...Lower Cost, Quality Products, & Personal Service
2310 N. Stallings Dr.
Nacogdoches, TX 75964-0
Phone: 9365697941
Fax: 9365604685



SLED5 5W SQUARE LED STEPLIGHT

RAB LIGHTING

Catalog Number	SLED5
Manufacturer	RAB LIGHTING
Description	Landscape 196 Lumens Steplight 5 Inches Square 5W Cool Led Bronze
Weight per unit	1.7 (lbs/each)
Product Category	Step Lights

Features

Voltage Rating	100/240
Wattage	5
Lumens	196

Material, Color, and Finish

Color	Bronze

Descriptions

Description	5W SQUARE LED STEPLIGHT
Long Description	Landscape 196 Lumens Steplight 5 Inches Square 5W Cool Led Bronze
Product Type	Steplight 5" Square 5W Cool Bronze
Extra Long Description	RAB SLED5 STEPLIGHT 5" SQUARE 5W CO

Manufacturer Information

Brand	RAB Lighting Inc Rab Lighting
GTIN	00019813019871
Manufacturers Part Number	SLED5
UPC	885360

Taxonomies, Classifications, and Categories

Category Description	LED FLOODLIGHTS, WALLPACKS, BOLLARDS & LANDSCAPE LIGHTING
Type	Landscape

Packaging

Carton	1
Weight Per Each	1.7 (lbs/each)

Uses, Certifications, and Standards

Application	Outdoor
Mounting	CEILING

SLED5



Square LED Step Lights. Equivalent to 13 Watt CFL or 40 Watt incandescent. Applications for steps, decks, landscape and entries. Meets ADA requirements. 5-year, no-compromise warranty.

Color: Bronze

Weight: 1.7 lbs

Project:	Type:
Prepared By:	Date:

Driver Info

Type	Constant Current
120V	0.1A
208V	0.06A
240V	0.05A
277V	0.049A
Input Watts	5.3W

LED Info

Watts	5W
Color Temp	5000K (Cool)
Color Accuracy	68 CRI
L70 Lifespan	100,000 Hours
Lumens	196 lm
Efficacy	37 lm/W

Technical Specifications

Compliance

UL Listed:
Suitable for wet locations. Suitable for mounting within 4ft. of the ground.

IESNA LM-79 & LM-80 Testing:
RAB LED luminaires and LED components have been tested by an independent laboratory in accordance with IESNA LM-79 and LM-80.

Performance

Lifespan:
100,000-Hour LED lifespan based on IES LM-80 results and TM-21 calculations

Wattage Equivalency:
Equivalent to 13W CFL or 60W Incandescent

Electrical

Driver:
4W high output long life LED. Driver Constant Current, Class 2, 50-60 Hz, 100-240 VAC 0.18 amps.

Voltage:
120-277V

Surge Protection:
1000 Volts

Construction

Finish:
Formulated for high durability and long-lasting color

Cold Weather Starting:
The minimum starting temperature is -40°C (-40°F)

Maximum Ambient Temperature:
Suitable for use in up to 40°C (104°F)

Green Technology:
Mercury and UV free. RoHS-compliant components.

Housing:
Precision die-cast aluminum housing and mounting plate (junction box not included)

Gaskets:
High-temperature silicone

LED Characteristics

Color Consistency:
7-step MacAdam Ellipse binning to achieve consistent fixture-to-fixture color

Lumen Maintenance:
The LED will deliver 70% of its initial lumens at 100,000 hours of operation

Color Temperature:
5000K

Other

Patents:
The design of the SLED Lights are protected by U.S. Pat. 612,975, Canada Pat. 133101, and China Pat. ZL201030129140.1.

Warranty:
RAB warrants that our LED products will be free from defects in materials and workmanship for a period of five (5) years from the date of delivery to the end user, including coverage of light output, color stability, driver performance and fixture finish. RAB's warranty is subject to all terms and conditions found at rablighting.com/warranty.

Buy American Act Compliance:
RAB values USA manufacturing! Upon request, RAB may be able to manufacture this product to be compliant with the Buy American Act (BAA). Please contact customer service to request a quote for the product to be made BAA compliant.

Copyright © 2024 RAB Lighting All Rights Reserved Note: Specifications are subject to change at any time without notice

Dimensions

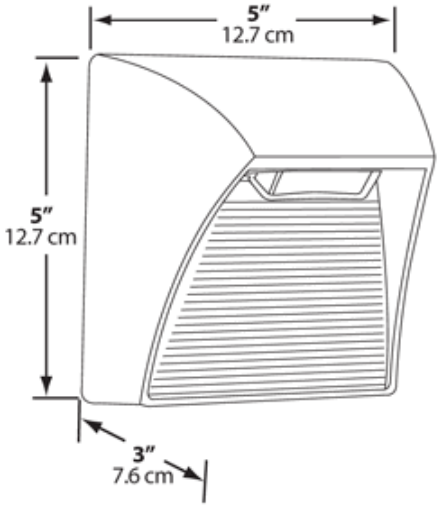

Features

- 5 Watt, High output LED
- 100,000-hour life
- Superior heat sinking with die cast aluminum housing
- Meets ADA Requirements
- Junction Box Not Included

Copyright © 2024 RAB Lighting All Rights Reserved Note: Specifications are subject to change at any time without notice