ELLIOTT ELECTRIC SUPPLY
We Deliver...Lower Cost, Quality Products, & Personal Service
2310 N. Stallings Dr.
Nacogdoches, TX 75964-0
Phone: 9365697941
Fax: 9365604685



SFA6 SLIPFIT ADAPTER

CROUSE-HINDS

Catalog Number	SFA6
Manufacturer	CROUSE-HINDS
Description	Floodlight Slip Fitter, 2 in Length, 4.4 lb
Weight per unit	4.4 (lbs/each)
Product Category	Lighting Accessories

Features

Dimensions	10.0000 IN X 7.4000 IN X 6.6000 IN

Descriptions

Description	SLIPFIT ADAPTER
Features	Crouse-Hinds series Champ FMVA LED floodlights are designed to provide full-spectrum, crisp, white light in Class I and Class II hazardous areas. Eleven versions of the Champ FMVA are available, ranging from 3,000 to 50,000 lumens, providing a reliable and long-life solution for a wide range of floodlighting applications. Champ FMVA LED floodlights are certified for use in NEC, CEC and IEC hazardous locations, providing a single solution for applications around the world. These floodlights are ideal for
Long Description	Eaton Crouse-Hinds series Champ FMV/PFM slipfitter adapter
Product Type	Industrial LTG Parts-Ind Flood
Special Features	Short RG58 Coaxial Tail Is Terminated With A Crimped N-Type Female Connector, Used With CC3 SMA, CC10 SMA, CC20 SMA Coaxial Extender Kit
Extra Long Description	CRH SFA6 INDUSTRIAL LTG PARTS-IND F

Manufacturer Information

Brand	Eaton
	Eaton Crouse-Hinds
GTIN	00782274445212
UPC	782274

Taxonomies, Classifications, and Categories

Category Description	Poles & Accessories
Type	Floodlight slipfitter

Packaging

Carton	1
Weight Per Each	4.4 (lbs/each)

Uses, Certifications, and Standards

Application	Ind Facilities & Factories - Facility: Lighting and Lighting Controls

Pro LED Lighting
Champ® hi-lumen LED floodlights

CROUSE-HINDS SERIES

Champ® Pro PFM

Hi-lumen LED floodlights for heavy industrial











EATON
Powering Business Worldwide

Champ® Pro Series Floodlights

Safe. Reliable. Efficient.

Eaton's Crouse-Hinds offers the broadest portfolio of LED luminaires for any industrial or hazardous application.

We utilize more than 100 years of lighting expertise to maximize the benefits of LED technology and provide the safest, most reliable LED luminaires on the market today.



Why LED?

Useful life
- Economic life is up to 100,000 hours of maintenance-free and safe operation

Energy efficiency
- LED average energy consumption is up to 65% less than HID and 85% less than incandescent

Start/restart time
- Instant illumination compared to 10 min restrike time for HID

Light quality
- Higher color rendering and color temperature compared to HID

Environmental benefits
- LED reduces carbon footprint
- Mercury-free

Why Crouse-Hinds?

Industry-best reliability
- Built to withstand extreme temperatures, vibration, water and dust

Thermal management
- Effective heat sinking ensures longer life

Quality of light
- Custom optics designed to maximize light distribution and intensity

Retrofit compatibility
- LED fixtures are compatible with Crouse-Hinds' HID installed base

Success story
Dragline retrofit

Location:
Colowyo Mine, Meeker, CO

Background:
Colowyo was looking for a reliable, low maintenance solution to replace 1000W metal halide fixtures on the boom of their dragline.

Challenge:
Reduce maintenance/downtime and increase visibility on dragline. Colowyo had been using 1000W metal halide fixtures and wanted to look at LED from a maintenance and safety aspect. Key driving issues were the time factor to replace fixtures on the boom and the dragline's downtime cost (several thousands of dollars per hour) to perform maintenance.

Solution:
Eaton's Crouse-Hinds PFM25L LED Floodlights

Results:
Increased visibility, eliminated downtime and over $27,000 in savings

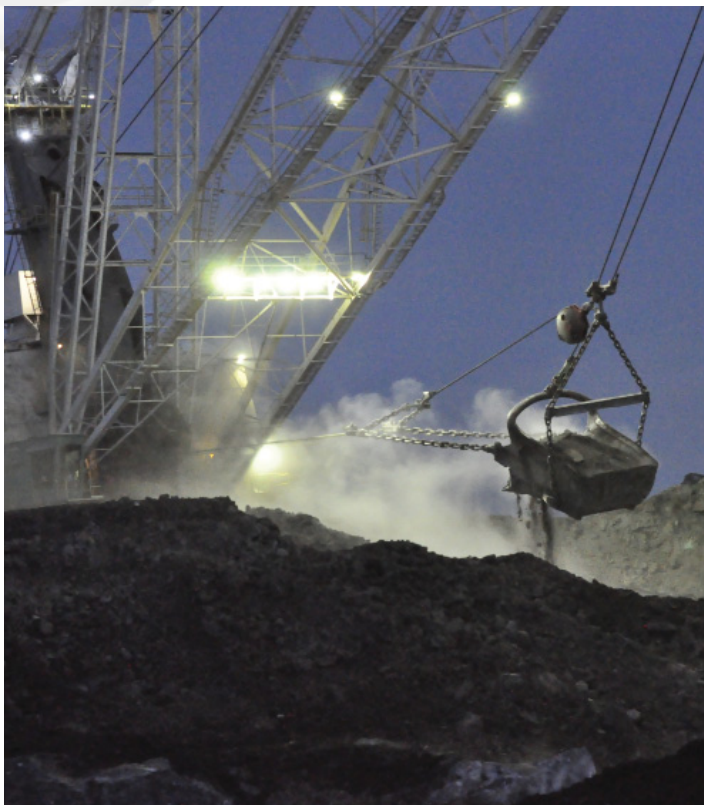

Design features





HIGH LUMEN OUTPUT

- High efficiency drivers and LEDs provide 100 LPW output for reliable, low cost operation in harsh and heavy industrial applications

RUGGED HEAT SINK

- Heat sink designed to perform in high ambient temperatures up to +55°C and as low as -40°C
- Thick walled castings make for a tough, rugged housing that keeps the internal driver and LED temperature down

VERSATILE DESIGN

- Can be used for outdoor or indoor applications, and for a wide range of mounting heights depending on model and light level requirement
- Replaceable drivers and LEDs for ease of maintenance and "no lights out" feature

MULTIPLE LENS OPTIONS

- Tempered and clear glass standard
- Polycarbonate and diffused glass lens options available

FULL-FRAME YOKE

- Designed to utilize the SFA6 slipfitter and SWB6 wall mount bracket, making it ideal for retrofit or new installations



PFM25L - 25,000 lumen model

Features & specifications

Champ Pro PFM Series LED Floodlights

Champ Pro Series LED Floodlights are designed to provide full-spectrum, crisp, white light. Two versions of the Champ are available, 25,000 and 50,000 lumens, providing ideal solutions for a wide range of applications.



PFM25L

Applications:

- High lumen output for installation in high mounting heights
- Locations requiring continuous and consistent light levels
- Areas requiring frequent on-and-off of lights
- Where extremely corrosive, wet, dusty, hot and/or cold conditions exist; indoors or outdoors
- NEMA 4X, marine, wet locations and hose-down environments
- Indoor and outdoor area lighting in plants, buildings and parking areas
- Manufacturing plants; heavy industrial, chemical, petrochemical or pharmaceutical facilities; platforms; loading docks; outdoor mounted general area lighting
- Ball mills, stackers and reclaimers, concentrators, smelters, mine roadways, outdoor processing areas, truck service shops, shovels and drag lines

LED system:

- Cool white (5000K, 67 CRI)
- Advanced heat sink design ensures LED does not exceed manufacturer's temperature ratings across all specified ambient conditions
- LM-79, LM-80 reports available upon request

Champ Pro LED benefits:

- Instant illumination and restrike
- Cold temperature operation / no warm-up required
- Redundancy in drivers with multiple series circuits connected to each driver to avoid complete loss of illumination
- Easy installation - yoke design to mount to SFA6
- Energy-efficient technology - up to 65% energy savings over HID fixtures
- Provides up to 100,000 hours of life - eliminates need for frequent lamp replacement
- Contains no mercury or other hazardous substances
- Shock- and vibration-resistant solid-state luminaires have no filaments or glass components that could break - greatly reduces the risk of premature failure
- Operating ambient -40°C to +40°C
- DesignLights® Consortium compliant for utility rebates*
- 5 year fixture warranty‡

‡Refer to page 2 of the D-0914 authorized distributor price book for Crouse-Hinds standard Terms and Conditions.

* Approved models include: PFM25LCYUNV1 76, PFM25LCYUNV34 76, PFM50LCYUNV1 76, PFM50LCYUNV34 76,

Refer to www.designlights.org Qualified Products List under family models for full listing details. Not all models are approved for all application categories.

Certifications and compliances:

- UL1598, UL1598A, cUL
- NEMA 4X; IP66
- IEC 60598; IEC 62471; IEC 62031; IEC 61347-2-13; IEC 62493
- CENELEC EN 55015; CENELEC EN 61547; CENELEC EN 61000-3-2
- SA AS/NZR CISPR 15

Model Number	Nominal Lumens	Wattage	Equivalent HID Luminaire	Typical Energy Savings/Lifetime
PFM25L	26,240 (7x6) / 32,041 (3x3)	263	750-1000W	Up to 65% energy savings and over 100,000 hours of continuous operation!
PFM50L	53,890 (7x6) / 64,082 (3x3)	531	1500W	

Effective projected area (EPA)

	PFM25L	PFM50L
Maximum EPA	2.80	6.00

Electrical ratings

	PFM25L	PFM50L
Input Power (Watts)	263	531
Input Amps at 120-277 VAC	0.70 - 2.80	1.40 - 5.60
Voltage Range, VAC	120-277V, 277-480V @ 50/60 Hz	
Voltage Range, VDC	127-250V	
Power Factor	>0.90	

Drivers

Option	25L & 50L
/UNV1	90-305 VAC, 50/60 Hz; 127-250 VDC
/UNV34	277-480 VAC, 50/60 Hz

Weights

Model Number	LBS.	KG.
PFM25L	52.00	23.59
PFM50L	106.00	48.08



PFM50L

Standard materials:

- Lamp housing and adapter - die cast aluminum with Corro-free™ epoxy powder coat
- Lens - heat- and impact-resistant glass
- Gaskets - silicone
- External hardware - stainless steel
- Factory-sealed, no external seals required

Accessories (ordered separately):

	Model Number
• Bolt-on visor	**DSV1**
• Bolt-on wire guard	**P61**
• Floodlight slipfitter	**SFA6***
• Slipfitter wall mount adapter	**SWB6***
• Safety cable	**SC30H†**

* Available with PFM25L model only.
† PFM50L requires two safety cables.

Options (add suffix to model number)

	Suffix
• Two conduit/cable glands of like thread installed	**S886**
• Diffused glass lens	**S891**
• Polycarbonate lens	**S903**

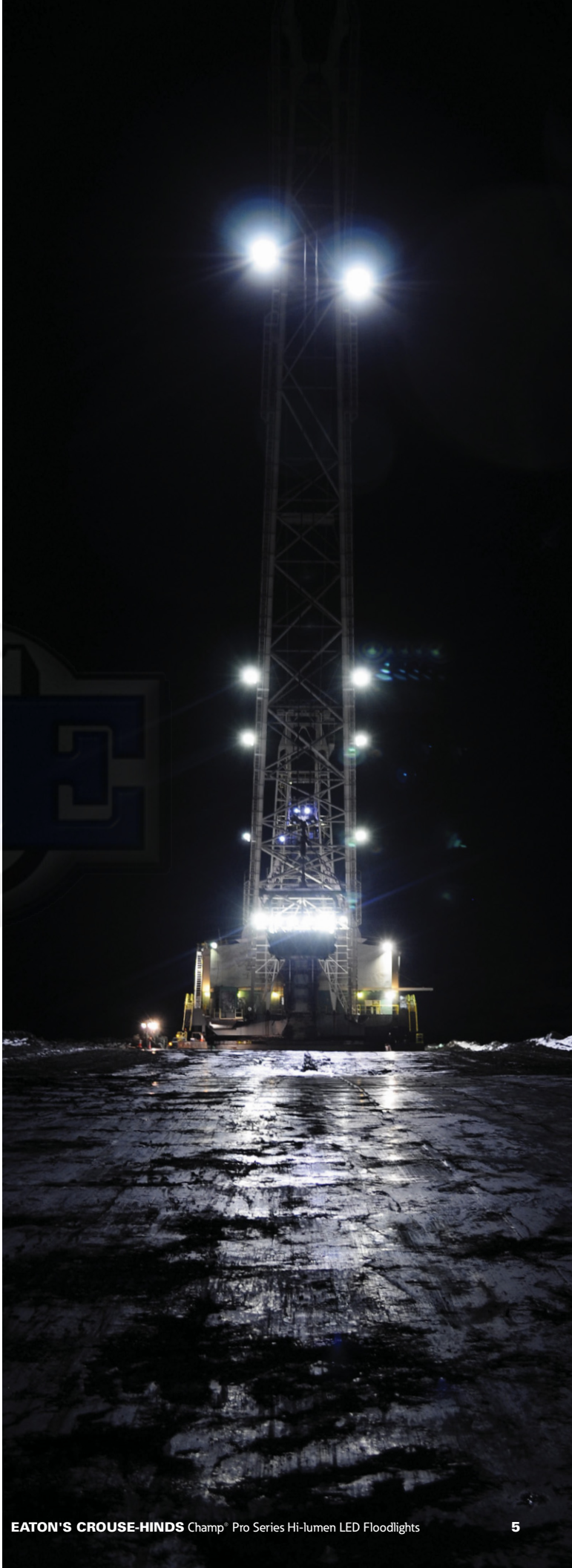

Ordering information

Part number example

PFM13LWY/UNV1 76 S886

PFM 25L C Y /UNV1 76 S886

Model

PFM	NEC model
NPFM	IEC model

Light source/intensity

25L	26,240 nominal lumens, 263 watts (7x6)
50L	53,890 nominal lumens, 531 watts (7x6)

Color temperature

C	5000K (cool white)

Mount

Y	Yoke

Options

S886	Two conduit/cable glands of like thread installed
S891	Diffused glass lens
S903	Polycarbonate lens

Entries

BLANK	3/4" NPT
M20*	20mm
M25*	25mm

* NPFM requires entry type.

Optical distribution

76	7x6 floodlight pattern optics
33	3x3 floodlight pattern optics

Voltage

/UNV1	90 to 305 VAC 50/60 Hz; 127 to 250 VDC
/UNV34	277 to 480 VAC 50/60 Hz

Dimensions - PFM25L

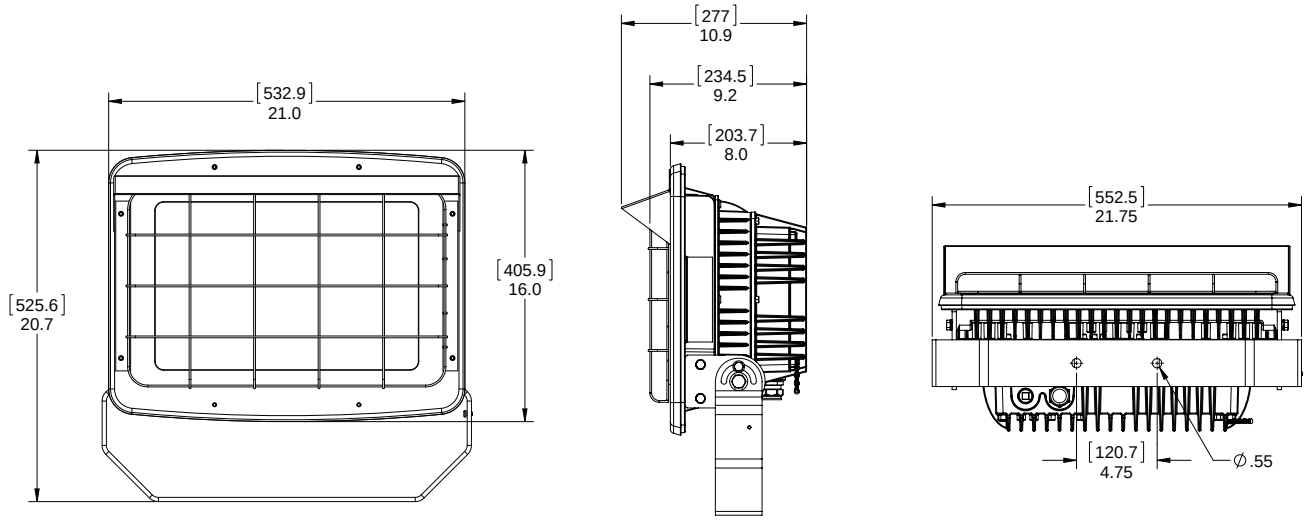

Photometric data

PFM25L Height: 50 ft.

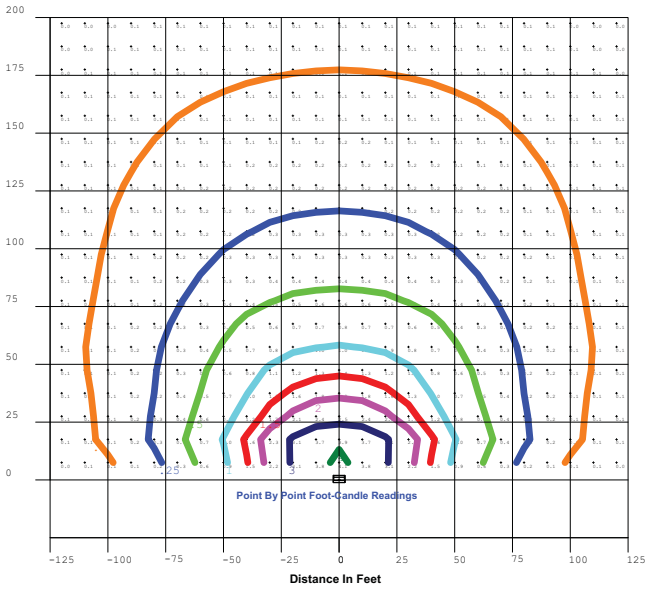

4.00 Fc | 3.00 Fc | 2.00 Fc | 1.50 Fc | 1.00 Fc | 0.50 Fc | 0.25 Fc | 0.10 Fc

Model Number	Nominal Lumens	Wattage	Equivalent HID Luminaire
PFM25L	26,240	263	750-1000W

PFM50L Height: 50 ft.

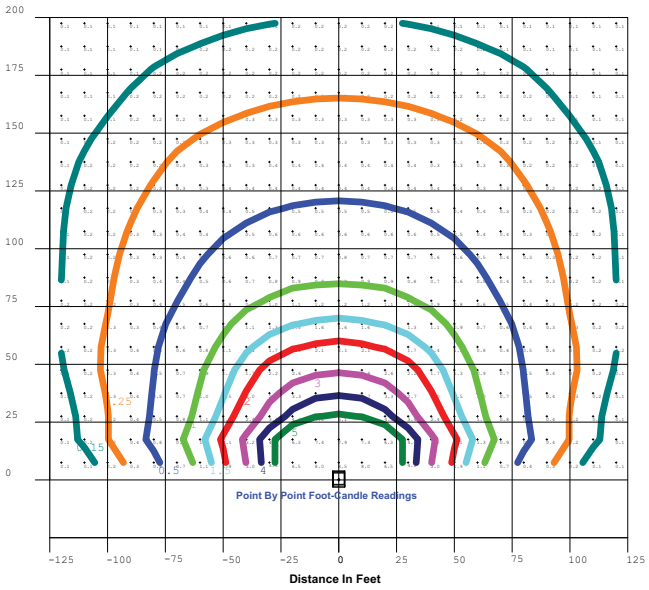

5.00 Fc | 4.00 Fc | 3.00 Fc | 2.00 Fc | 1.50 Fc | 1.00 Fc | 0.50 Fc | 0.25 Fc | 0.15 Fc

Model Number	Nominal Lumens	Wattage	Equivalent HID Luminaire
PFM50L	53,890	531	1500W

Dimensions - PFM50L

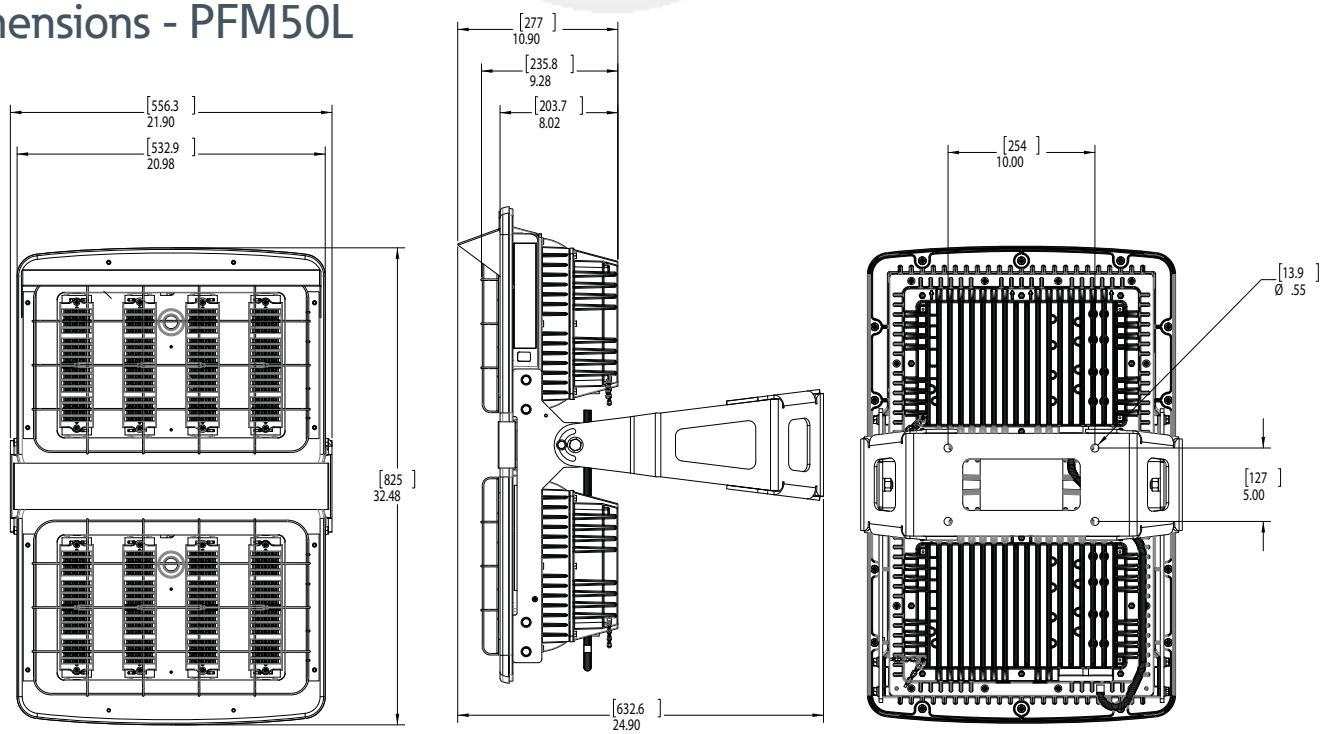

U.S. (global headquarters): Eaton's Crouse-Hinds business

1201 Wolf Street
Syracuse, NY 13208

(866) 764-5454
FAX: (315) 477-5179
FAX Orders Only:
(866) 653-0640

crousecustomerctr@eaton.com

Canada

Toll Free: 800-265-0502
FAX: (800) 263-9504
FAX Orders only: (866) 653-0645

Middle East (Dubai)

9714-8066100
FAX: 9714-8894813

chmesales@eaton.com

Korea

82-2-3484-6783
82-2-3484-6778

CCHK-sales@
cooperindustries.com

Mexico/Latin America/Caribbean

52-555-804-4000
FAX: 52-555-804-4020

ventascentromex@eaton.com

Singapore

65-6645-9888
FAX: 65-6297-4819

chsi-sales@
cooperindustries.com

Australia

61-2-8787-2777
FAX: 61-2-9609-2342

CEASales@
cooperindustries.com

Europe (Germany)

49 (0) 6271 806-500
49 (0) 6271 806-476

sales.CCH.de@
cooperindustries.com

China

86-21-2899-3600
FAX: 86-21-2899-4055

cchsales@
cooperindustries.com

India

91-124-4683888
FAX: 91-124-4683899

cchindia@
cooperindustries.com

For more information:

If further assistance is required, please contact an authorized Eaton Distributor, Sales Office, or Customer Service Department.

Eaton
1000 Eaton Boulevard
Cleveland, OH 44122
United States
Eaton.com

© 2016 Eaton
All Rights Reserved
Printed in USA
Publication No. 5110-0216
February 2016

Eaton is a registered trademark.

All other trademarks are property of their respective owners.

Powering Business Worldwide