ELLIOTT ELECTRIC SUPPLY
We Deliver...Lower Cost, Quality Products, & Personal Service
2310 N. Stallings Dr.
Nacogdoches, TX 75964-0
Phone: 9365697941
Fax: 9365604685



SA520B 120V AC/DC ONELINK SMOKE ALARM-BRIDGE UNIT

BRK BRANDS/ADEMCO/FIRST ALERT

Catalog Number	SA520B
Manufacturer	BRK BRANDS/ADEMCO/FIRST ALERT
Description	Smoke Alarm-Bridge Unit, 120 V ac, 85 dB @ 10 ft Sound Level, White, +40 °F Operating Temperature, +100 °F Operating Temperature, 5.0 in Overall Width, 2.0 in Overall Height, 9.3 oz
Weight per unit	0.7400 (lbs/each)
Product Category	Fire & Alarm Monitors & Systms

Features

Operating Voltage	120V AC 60Hz w/ 3V battery backup
Output Current	120V AC 60Hz w/ 3V battery backup
Sensor Type	Photo
Temperature Range	40 Degree F (4 Degree C) to 100 Degree F (38 Degree C)
Alarm Type	Audio
Dimensions	5.0" diameter x 2.1" height

Material, Color, and Finish

Color	White
Enclosure Material	Plastic

Descriptions

Description	120V AC/DC ONELINK SMOKE ALARM-BRIDGE UNIT
Features	Hardwired Wireless Interconnect smoke alarm bridge unit with replaceable battery backup and Silence feature.
Long Description	BRK SA520B 120V AC Wireless Interco
Product Type	120V Ac Wireless Interconnect SMK Bridge

Manufacturer Information

Brand	BRK
GTIN	00029054002051
UPC	881740

Taxonomies, Classifications, and Categories

Category Description	SIGNALING EQUIPMENT
Type	Wireless Smoke Alarm with Voice and Location

Availability

Manufacturer Status	Inactive

Packaging

Carton	1
Package	3
Weight Per Each	0.7400 (lbs/each)

2310 N. Stallings Dr.
Nacogdoches, TX 75964-0
Phone: 9365697941
Fax: 9365604685

Uses, Certifications, and Standards

Mounting	Electrical junction box, wall or ceiling
Environmental Conditions	10 percent to 90 percent relative humidity (RH)
Standard	UL217

SMOKE ALARM PHOTOELECTRIC

WIRELESS INTERCONNECT

CAT. **SA520B**

BRIDGE UNIT
Easily add BRK Battery Powered Wireless Interconnect alarms to an existing BRK interconnected 120V AC system by replacing one hardwired alarm with this Bridge Unit.

WIRELESS INTERCONNECT
Reliable and secure radio frequency communication between alarms. 915 MHz frequency with 65,000 security codes and 3 channel frequency hopping.

MESH NETWORK COMMUNICATION
2-way communication format that sends, receives and re-sends the alarm signals providing a more reliable network.

PHOTOELECTRIC
Photoelectric technology is generally more sensitive at detecting large particles, which tend to be produced in greater amounts by smoldering fires.

SILENCE FEATURE
Silences nuisance alarms.

TAMPER RESISTANT
Locks alarm to mounting bracket to prevent removal of battery and/or alarm. Perfect for apartment, dormitory or hotel applications.

LIMITED 10 YEAR WARRANTY

FEDERAL COMMUNICATIONS COMMISSION · USA · PHOTOELECTRIC

Listed to UL 217 Standard

BRK®

THE PROFESSIONAL STANDARD

120V AC, 60Hz Wire-in with two AA Battery Backup

Description:

BRK SA520B (model SA520) is a wire-in, 120V AC 60Hz single and/or multiple station photoelectric smoke alarm specifically designed for residential and institutional applications including sleeping rooms of hospitals, hotels, motels, dormitories, and other multifamily dwellings as defined in standard NFPA 101. BRK SA520B has been fully tested and complies with, UL217, CSFM, NFPA 72, and NFPA 101 and other agencies that model their codes after the above agencies. It meets building codes where AC with battery backup smoke alarms with wireless interconnect and silence features are required and with model building codes published by the ICC.

BRK SA520B is a state of the art wireless smoke alarm designed to provide early warning of a fire. It features a fully insect screened Photoelectric smoke sensing chamber, an 85dB horn, a full function test switch and a silence feature. This smoke alarm interconnects via wired and/or wireless communication. Wireless communication is on a reliable and secure radio frequency of 915 MHz frequency with 65,000 security codes and 3 channel frequency hopping. It operates on a Mesh Network; a two-way communication format that sends, receives and re-sends the alarm signals providing a more reliable network. It also features tamper resistant locking pins that lock alarm to the mounting bracket and battery drawer to prevent removal of battery or alarm. Perfect for apartment, dormitory or hotel applications. Designed for wall or ceiling mounting. Includes mounting anchors and screws.



CAT. SA520B



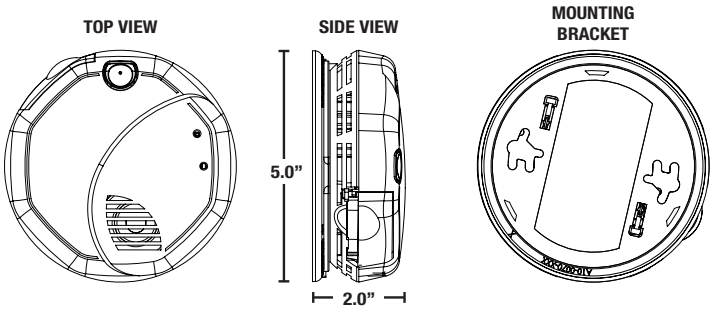

ARCHITECTURAL AND ENGINEERING SPEC

The smoke alarm shall be a BRK Model SA520 (cat. no. SA520B) and shall provide at a minimum the following features and functions:

1. A photoelectric smoke sensing chamber.
2. Wireless interconnect: 915 MHz frequency with 65,000 security codes and 3 channel frequency hopping.
3. Operates on a Mesh Network; a two-way communication format that sends, receives and re-sends the alarm signals providing a more reliable network.
4. A fully screened sensing chamber to resist entry of small insects.
5. Powered by 120V AC, 60Hz and have a monitored AA battery backup 2, a solid state horn rated at 85dB at 10 ft and should be capable of self restoring.
6. A visual LED power-on indicator to confirm unit is receiving power or is in alarm.
7. Two Silence features - Low Battery Silence: Silence low battery chirp for up to 8 hours. Alarm Silence: Temporarily silence unwanted nuisance alarms.
8. Two Locking features - tamper resistant locking pins that lock battery drawer and/or alarm to mounting bracket.
9. The unit shall be capable of operating between 40°F (4°C) and 100°F (38°C) and relative humidity between 10% and 95%.
10. The unit shall have a plug in connector and be capable of interconnection of up to 18 alarms, 12 of which can be smoke alarms.
11. The unit shall at a minimum meet the requirements of UL217, CSFM, NFPA 72, NFPA 101, ICC.

INSTALLATION OF ALARM

Installation of this smoke alarm must conform to all local electrical codes and Article 760 of the National Electrical Code (NFPA 70) and NFPA 72. Interconnected units must meet the following requirements: Total length of wire interconnecting units should be less than 1000 feet, be #18 gauge or larger and be rated at least 300V. It is recommended that all units be on the same fuse or circuit breaker. If local codes do not permit, be sure the neutral wire is common to both phases.

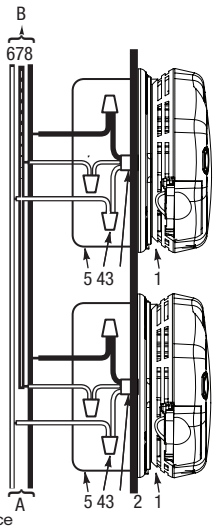

THE PARTS OF THIS ALARM

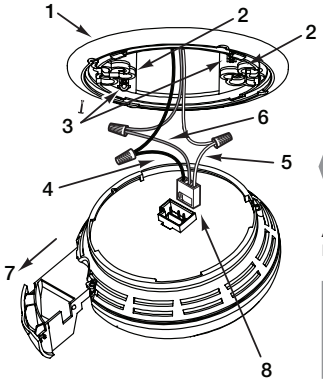

1. Mounting bracket
2. Mounting Slots
3. Locking Pins
4. Hot (Black) AC Wire
5. Nuetral (White) AC Wire
6. Interconnect (Orange) Wire
7. Pull-out battery drawer
8. Quick-Connect Plug

A. Unswitched 120VAC 60 Hz source
B. To additional units; Maximum = 18 total (Maximum 12 Smoke Alarms)

1. Smoke Alarm
2. Ceiling or Wall
3. Power Connector
4. Wire Nut
5. Junction Box
6. Neutral Wire (White)
7. Interconnect Wire (Orange)
8. Hot Wire (Black)

TECHNICAL SPECS

Alarm Dimensions:	5.0"Dia. x 2.0"H
Weight:	9.3 oz
Operating Voltage:	120V AC with battery backup (Two 1.5V AA Batteries)
Temperature Range:	40°F (4°C) to 100°F (38°C)
Humidity Range:	10% to 95% relative humidity (RH)
Audio Alarm:	85dB at 10 feet
Wireless Frequency:	915 MHz. FCC approved. Complies with Part 15 of the FCC Rules.
RF Linking:	Automatic with 65,000 security codes
Test/Silence:	Electronically simulates smoke condition, causing the unit to alarm. Press and hold test/silence button.
Alarm Reset:	Automatic when smoke clears
Smoke Sensor:	Photoelectric
Interconnections:	Up to 18 units, RF or hardwired (needs SA520B Bridge Unit), with smoke, carbon monoxide, heat alarms and relays. Maximum 12 smoke alarms.
Listing:	Listed to UL217 Standard

SHIPPING SPECS

Individual Carton Dimensions	5.13"L x 2.38"W x 5.13"H
Weight	0.74 lbs.
Cube	0.04 ft3
UPC	0 29054 00205 1
Master Carton Dimensions	10.75"L x 7.88"W x 11.06"H
Master Pack	12
Weight	9.4 lbs.
Cube:	0.54 ft3
I2of5:	100 29054 00205 3
Pallet Information	
Cases per Layer	22
Number of Layers:	4
Cases per Pallet:	88
Units per Pallet:	1,056
Cube:	54 ft3
Weight:	882 lbs.

BATTERY DRAWER LOCK

Remove Pin from Mounting Bracket

Close Door. Insert Pin in Holes through alarm and Battery Drawer

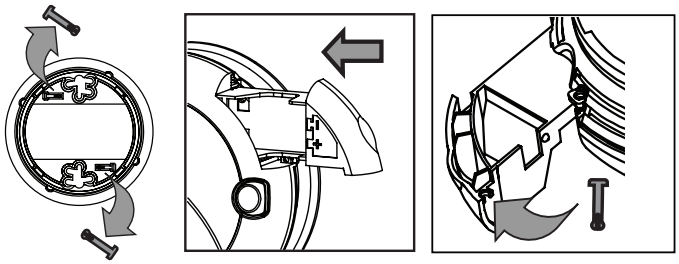

BRK®
THE PROFESSIONAL STANDARD
brkelectronics.com

©2016 BRK Brands, Inc. a subsidiary of Newell Brands (NYSE: NWL) 3901 Liberty Street Road, Aurora, IL 60504-8122, All rights reserved. First Alert is a registered trademark of the First Alert Trust. BRK is a registered trademark of BRK Brands, Inc. CM3226

This product is intended for non-professional do it yourself installation. If you would like information about a professionally installed and monitored system, please contact First Alert Professional at 1-800-921-6025. First Alert Professional is not affiliated with BRK Brands, Inc.