ELLIOTT ELECTRIC SUPPLY
We Deliver...Lower Cost, Quality Products, & Personal Service
2310 N. Stallings Dr.
Nacogdoches, TX 75964-0
Phone: 9365697941
Fax: 9365604685



SA15 15" HIGHBAY REFLECTOR

COOPER LIGHTING SOLUTIONS

Catalog Number	SA15
Manufacturer	COOPER LIGHTING SOLUTIONS
Description	15" ALUMINUM HIGH-BAY REFLECTOR
Weight per unit	1.0 (lbs/each)
Product Category	Lighting Reflectors

Material, Color, and Finish

Color	Silver CU-IN

Dimensions and Weight

Size	15.9 IN Length 15.9 IN Width 8.2 IN Height

Descriptions

Description	15" HIGHBAY REFLECTOR
Long Description	15" ALUMINUM HIGH-BAY REFLECTOR
Product Type	15" Alum High-Bay Reflector
Special Features	Easy slide-on die-cast aluminum mounting box with tapped opening

Manufacturer Information

Brand	Cooper Lumark
GTIN	00662400127505
Manufacturers Part Number	SA15
UPC	783363
Sub Brand	SS Steeler 15"

Taxonomies, Classifications, and Categories

Category Description	Indoor HID Lighting
Type	Industrial Component

Packaging

Carton	1
Weight Per Each	1.0 (lbs/each)

Uses, Certifications, and Standards

Application	lighting
Mounting	Accessory
Standard	UL Listed - Damp Location

Lumark

DESCRIPTION

The Steeler combines computerized design, durable cold-rolled steel and a field-adjustable reflector to provide a degree of versatility unmatched in other industrials. U.L. listed and labeled for damp location. CSA Certified. The Steeler is perfect for warehouses, gymnasiums, assembly areas, hangars, manufacturing and automotive service areas.

Catalog #		Type
Project		
Comments		Date
Prepared by		

SPECIFICATION FEATURES

Construction
HOUSING: Heavy-duty, formed steel housing with an open air ballast for cooler operation is finished in a white polyester powder coat. UNIVERSAL BRACKETS: Universal ladder brackets allow for the flexibility to change out with other reflectors available in acrylic or glass.

Electrical
BALLAST: High power factor ballast with class H insulation. Minimum starting temperature is -40°C (-40°F) for HPS and -30°C (-20°F) for MH, MP and ML. SOCKET: Mogul-base socket standard for HPS. For Metal Halide, protected socket standard, for use with "O" rated protected Metal Halide lamps only.

Optical
REFLECTOR: Computer-designed, field-adjustable reflector mounts easily and allows multiple distribution patterns for precise control.

Mounting
Easy slide-on die-cast aluminum mounting box with tapped opening for 3/4" conduit.



SS
15" STEELER

70 - 450W
High Pressure Sodium
Pulse Start Metal Halide
Metal Halide

ALUMINUM HIGH-BAY

DIMENSIONS

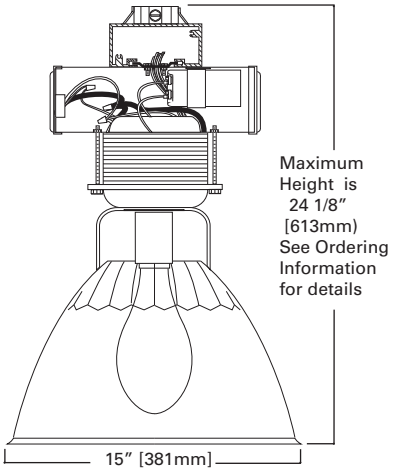

TECHNICAL DATA

EISA Compliant Ⓔ
65° Ambient Environment.
90° Supply Wire Rating.

ENERGY DATA

Reactor Ballast Input Watts
70W HPS NPF/HPF (82 Watts)
100W HPS NPF/HPF (118 Watts)
150W HPS NPF/HPF (175 Watts)
150W MH NPF/HPF (185 Watts)

CWI Ballast Input Watts
250W HPS HPF (300 Watts)
250W MH HPF (300 Watts)
400W HPS HPF (465 Watts)
400W MH HPF (475 Watts)

CWA Ballast Input Watts
175W MP HPF (198 Watts) Ⓔ
200W MP HPF (227 Watts) Ⓔ
250W MP HPF (283 Watts) Ⓔ
320W MP HPF (365 Watts) Ⓔ
350W MP HPF (400 Watts) Ⓔ
400W MP HPF (452 Watts) Ⓔ
400W HPS HPF (465 Watts)
450W MP HPF (508 Watts) Ⓔ

Shipping Data
Approximate Net Weight:
30 lbs. (13 kgs.)

PHOTOMETRICS

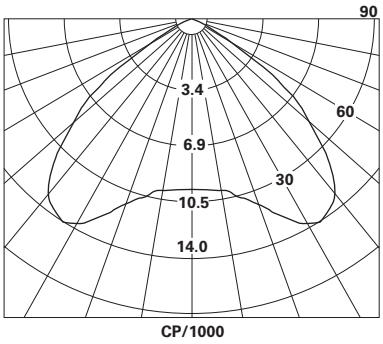

MPSS-SA15-400-MT-Q
400-Watt MP, Medium Distribution
44,000-Lumen Clear Lamp

Coefficients Of Utilization

	Effective floor cavity reflectance								20%											
rc	80%				70%				50%			30%			10%			0%		
rw	70	50	30	10	70	50	30	10	50	30	10	50	30	10	50	30	10	0		
RCR																				
1	88	85	82	80	86	83	80	78	79	77	76	76	74	73	73	72	71	69		
2	81	76	71	67	79	74	70	66	71	68	65	68	66	63	66	64	62	60		
3	75	67	62	57	73	66	61	57	64	59	56	61	58	55	59	56	53	52		
4	69	60	54	49	67	59	53	49	57	52	48	55	51	47	53	50	47	45		
5	63	54	47	43	62	53	47	42	51	46	42	50	45	41	48	44	41	39		
6	58	49	42	37	57	48	42	37	46	41	37	45	40	36	44	39	36	34		
7	54	44	37	33	53	43	37	33	42	36	32	41	36	32	40	35	32	30		
8	50	40	34	29	49	39	33	29	38	33	29	37	32	29	36	32	28	27		
9	47	37	30	26	46	36	30	26	35	30	26	34	29	26	33	29	25	24		
10	44	33	27	23	43	33	27	23	32	27	23	31	26	23	31	26	23	22		

Spacing Criterion 1.8

Zone	%Lamp	Zone	%Lamp
0-30	22.8	0-90	78.0
0-40	42.3	90-180	1.2
0-60	73.9	Total	79.2

Candlepower

Degree	CP
0	10052
5	10086
15	10829
25	12819
35	13908
45	11170
55	6188
65	1182
75	276
85	28
95	7
105	23
115	17
125	18
135	40
145	83
155	614
165	288
175	18
180	17

ORDERING INFORMATION

Sample Number: MPSS-SA15-M-175-MT-OR

Lamp Type
MP=Pulse Start Metal Halide[1]
MH=Metal Halide[1, 2]
HP=High Pressure Sodium[3]

Series
SS= Steeler

Reflector Type
SA=Anodized Spun Aluminum

Reflector Diameter
15= 15" Diameter

Distribution [4]
C= Concentrated
M= Medium
W= Wide

Lamp Wattage
MP
70=70W
100=100W
175=175W
200= 200W
250= 250W
320= 320W
350= 350W
400= 400W
450= 450W
MH [2]
175= 175W
250= 250W
400= 400W
HP
70= 70W
100= 100W
150= 150W
250= 250W
400=400W

Voltage [5]
120V=120V
208V=208V
240V=240V
277V=277V
347V= 347V
480V= 480V
MT= Multi-Tap, [6] wired 277V
TT= Triple-Tap, [7] wired 347V
5T= 5-Tap[8]

Socket
OR= Open Rated [9] Socket for Metal Halide Lamps
__= Non Applicable (HPS or Not compatible with OR Socket)

Options
C3=3' Cord with no plug (Specify Voltage)[10]
PC3=3' Cord with NEMA Plug (120V-L5-15P, 208V-L6-15P, 347V-L37-20P, AND 480V-L8-20P) Other cord lengths are available by specifying length (PC6 for 6' Cord) Requires FH-1 or FL-1, or SHK. Example: PC3-120V Use with TPPH-NEMA. Specify Voltage. [10]
PHC= Power Cord and Plug (18" Power Cord and Non-NEMA plug configuration. Must be used with FL-1 and TPPH (Thru-Way Pendant Power Hook). Must specify single voltage.
PHC-NEMA= Power Cord and NEMA Plug (18" Power Cord and 20 AMP NEMA plug configuration). Must be used with FL-1 and TPPH-NEMA (Thru-Way Pendant Power Hook).
P= Pre-set Socket Position from the factory
FH-1= Die-cast Aluminum Fixture Hook (with 3/4" threads for easy installation)
FL-1= Malleable Iron Plated Fixture Loop (with 3/4" threads for easy installation)
SHK=Die-cast Aluminum Fixture Hook (with safety screw and 3/4" threads for easy installation)
HSW=Integral LumaWatt Sensor and Control [11] w/ Wide Distribution
F1=Single Fuse (120, 277 or 347V only)
F2=Double Fuse (208, 240 or 480V only)
SCF=3' Aircraft Safety Cable secures Housing to Ceiling (Alternative lengths available. Example: SCF6 = 6' Cable)
Q=Quartz Restrike (Hot Strike Only)
EM=Quartz Restrike with "Delay Relay" (Quartz lamp strikes at both hot and cold starts)
EM/SC=Emergency Separate Circuit[12]
L/TCB=Less Top Connector Box (Housing shipped less top connector box. (Specify when using TWMBS accessory)
LL=Lamp Included[13]
SCR=Aircraft Safety Cable-Housing to Reflector
W/MWS=MWS Industrial components attached to the fixture at the factory. (Standard cord length is 3 ft. 6 ft. and 11 ft. also available. Please refer to MWS Modular Wiring System section for additional information.
HC=LumaWatt Fixture Control Module [11, 14] (Low voltage leads pulled out of top connection box for areas requiring all wiring to be installed in conduit)
HL=LumaWatt Fixture Control Module [11] (Allows low voltage control wire to be daisy-chained between fixtures outside AC conduit run similar to low voltage intercom's, fire alarms and phone systems)
QLL=Quartz Lamp Included (Lamp is Cooper designated product based on luminaire requirements. Lamp is shipped separate from luminaire unless otherewise noted)

Accessories [15]
C3=3' Cord-No Plug - Requires FH-1, FL-1, or SHK [10]
PC3=3' Cord with NEMA Plug - (120V-L5, 208V-L6-15P, 347V-L37-20P and 480V-L8-20P) Other cord lengths are available by specifying length (PC6 for 6' cord). Requires FH-1 or FL-1, or SHK. Use with TPPH-NEMA. Specify Voltage. [10]
PHC= Power Hook Cord and Non-NEMA plug configuration. Must be used with FL-1 and TPPH (Thru-Way Pendant Power Hook)
PHC-NEMA= Power Cord and NEMA plug - 18" Power Cord and 20 Amp NEMA plug configuration. Must be used with FL-1 and TPPH-NEMA (Thru-Way Pendant Power Hook)
SGB15= Safety Glass Bottom (Not Compatiable with "WG15")
WG15= Wire Guard (Not Compatible with "SGB15")
WG15/GLC= Gym Wireguard w/ Safety Glass
MBT= Twin Mount Bracket (Fixtures must be same voltage and without hooks, loops or plugs.)
TPPH=Thru-Way Pendant Power Hook. Requires FL-1 and PHC. Specify Voltage.
TPPH-F=Thru-Way Pendant Power Hook Single Fuse, 120, 277 or 347 Volt. Requires FL-1 and PHC. Specify Voltage.
TPPH-F2=Thru-Way Pendant Power Hook - Double Fused, 208, 240, or 480 Volt. Requires FL-1 and PHC. Specify Voltage.
TPPH-F-QD=Thru-Way Pendant Power Hook Single Fuse, Quick Disconnect. Requires FL-1 and PHC. Specify Voltage (120, 277, or 347V)
TPPH-F2-QD=Thru-Way Pendant Power Hook Double Fuse, Quick Disconnect. Requires FL-1 and PHC. Specify Voltage (208, 240, or 480V)
TPPH-NEMA=Thru-Way Pendant Power Hook. Requires FL-1 and PHC-XXXV-NEMA. (Specify Voltage).
FH-1=Fixture Hook
FL-1=Fixture Loop
SHK=Hook with Safety Screw
TWMBS=Thru-Way Mounting Box[16]

Notes:
1. Open Rated socket and lamp must be used.
2. MH available in non-U.S. markets only.
3. Not available in 175, 200, 320, 350 and 450W.
4. Factory set for concentrated, medium or wide distributions otherwise fixture is shipped in medium setting.
5. Products also available in non-US voltages and 50HZ for international markets. Consult your Cooper Representative for availabiltiy and ordering information. 88% Efficient EISA Compliant MP Fixtures not available in 347V and TT Voltages.
6. Multi-Tap ballast 120/208/240/277V wired 277V.
7. Triple-Tap ballast 120/277/347V wired 347V.
8. 5-Tap ballast 120/208/240/277/480V wired 277V. 400W Metal Halide only. 88% efficient EISA Compliant MP fixtures not available in 5-Tap Voltages.
9. Not applicable for HPS.
10. Requires FH-1or FL-1or SHK.
11. 30 second time delay when switching from bright to dim. Consult individual lamp manufacturers recommendations for compatible lamps. For use with CWA ballast only.
12. Not available with HL or HC options.
13. Lamp is shipped separately.
14. Not available with PC3, C3, PHC or MWS. Not available with single circuit MWS special order.
15. Order separately.
16. Specify L/TCB when using thru-way mounting box (TWMBS) accessory.

VOLTAGE CHART	
MT=Multi-Tap	120/208/240/277 (wired 277V)
TT=Triple-Tap	120/277/347 (wired 347V)
5T=5-Tap [10]	120/208/240/277/480 (wired 277V)

LAMP TYPE	WATTAGE
Pulse Start Metal Halide (MP)	70, 100, 175, 200, 250, 320, 350, 400, 450W
Metal Halide (MH)	175, 250, 400W
High Pressure Sodium (HPS)	70, 100, 150, 250, 400W