ELLIOTT ELECTRIC SUPPLY
We Deliver...Lower Cost, Quality Products, & Personal Service
2310 N. Stallings Dr.
Nacogdoches, TX 75964-0
Phone: 9365697941
Fax: 9365604685



R4WH JNO R4WH 4FT WHITE TRAC

LITHONIA LIGHTING - ACUITY

Catalog Number	R4WH
Manufacturer	LITHONIA LIGHTING - ACUITY
Description	Reduced profile, single circuit trac sections for surface or pendant mounting. Compatible with a full range of feed, connector, and mounting accessories. Accepts all Trac-Lites and Trac-Master trac fixtures.
Weight per unit	1.8 (lbs/each)
Product Category	Lighting Accessories

Features

Voltage Rating	120 V
Warranty	1

Material, Color, and Finish

Color	White

Dimensions and Weight

Height	2
Length	49
Width	2

Descriptions

Description	JNO R4WH 4FT WHITE TRAC
Long Description	Reduced profile, single circuit trac sections for surface or pendant mounting. Compatible with a full range of feed, connector, and mounting accessories. Accepts all Trac-Lites and Trac-Master trac fixtures.
Product Type	Trac-Lites Trac Section, 1-Circuit, 4FT Track
Extra Long Description	LITH R 4FT WH Trac-Lites Trac Secti

Manufacturer Information

Brand	JUNO Acuity Brands
GTIN	00661209031747
Manufacturers Part Number	R 4FT WH
UPC	784231

Packaging

Carton	1
Weight Per Each	1.8 (lbs/each)

2310 N. Stallings Dr.
Nacogdoches, TX 75964-0
Phone: 9365697941
Fax: 9365604685

Uses, Certifications, and Standards

Application	Automotive & Parking,Education,Government,Healthcare,Hospitality,House of Worship,Offices & Banks,Residential,Retail,Sports and Recreation
Mounting	Track/Monopoint
Environmental Conditions	Indoor

JUNO

Project:

Fixture Type:

Location:

Contact/Phone:

TRAC-LITES Current Limiting Feeds For R Series Trac Systems

BAA BABA

PRODUCT DESCRIPTION

Juno Trac-Lites Current Limiting Feeds provide a simple solution for complying with stringent energy codes like ASHRAE 90.1 and California Title 24. Installed at every trac lighting feed location, these feeds employ supplementary current limiting circuit breakers which are designed to limit available wattage to lighting circuits to only that necessary to meet the lighting design criteria. Rather than lighting loads being calculated by the greater of maximum fixture wattage ratings or an arbitrary watts-per-foot multiplier, the Trac-Lites Current Limiting Feeds enable calculations to instead be made based on the rating of the supplementary breaker(s) installed in the feeds. Because they limit a circuit, not the lighting equipment itself, the Trac-Lites Current Limiting Feeds provide maximum flexibility to accommodate frequent lighting design modifications and layout changes, especially typical for retail spaces.

PRODUCT SPECIFICATIONS

Features Designed to be installed at every trac feed location, in place of a standard non-limiting feed • In-line feeds can be used to feed trac as one electrical circuit in both directions or as two separate circuits using two current limiters • Feed connector and current limiting circuit breaker are specified and ordered separately for maximum configuration flexi-bility • Not intended to be used as a primary circuit protector.

Mini End Feed Construction Surface mounting only – not intended to be installed over a j-box • T-bar compatible only when installed off-grid and fed directly • One 7/8" knockout for direct electrical feed connections • Includes ground terminal attachment screw • Injection molded polycarbonate cover attaches to mounting plate using tamper-resistant screws (screwdriver bit supplied with each mini end feed) • Mini end feed connector is permanently attached to trac using one-way screw • Also available in reverse polarity configuration.

End Feed Construction Heavy-duty 14 gauge (0.075 thick) die formed galvanized steel mounting plate • Surface or j-box mounting • T-bar compatible when fed directly • Mounting holes provided for j-box attachment • Center knockout enables feeding from j-box for simple wiring termination • Two 7/8" knockouts for direct electrical feed connections • Includes ground terminal attachment screw • Injection molded polycarbonate cover with tearout for 2-breaker installations • Cover attaches to mounting plate using tamper-resistant screws (screwdriver bit supplied with each mini end feed) • Feed connector is permanently attached to trac using one-way screw.

Finish Available in white, black, bronze or silver finishes • Supplementary current limiting circuit breakers are ordered separately and can be specified in complementary finishes to match feed connector.

Supplementary Current Limiting Circuit Breakers Miniature single pole supplementary current limiters limit the current (wattage) that can be consumed on the trac section being fed • Utilizes hydraulic magnetic technology which provides accurate and reliable circuit protection even when exposed to extremely hot and/or cold application environments • Rated for 120VAC, 60Hz operation • Available in individual amperage ratings of 0.5A, 1A, 2A, 3A, 4A, 5A, 6A, 7A, 8A, 10A, 12A and 14A, selected based on actual lighting loads • Can be operated continuously at rated current • Specially designed to prevent nuisance tripping • Easily snaps into mounting plate without the use of tools • Leads wires provided for simplified installation • ON/OFF indication clearly identifies breaker status • Easily resettable in the event of an overcurrent situation • UL 1077, CSA 22.2 approved.

Labels UL and cUL Listed • Approved by the California Energy Commission to meet the requirements of Title 24 • Complies with ASHRAE 90.1 and IECC Section 805.5.1.4 for trac current limiting.

Government Procurement

BAA – Buy America(n) Act: Product qualifies as a domestic end product under the Buy American Act as implemented in the FAR and DFARS. Product also qualifies as manufactured in the United States under DOT Buy America regulations.

BABA – Build America Buy America: Product qualifies as produced in the United States under the definitions of the Build America, Buy America Act.

Please refer to www.acuitybrands.com/buy-american for additional information.

Note: Actual performance may differ as a result of end-user environment and application.

Specifications subject to change without notice.



ORDERING INFORMATION

Electrical feeds are chosen based on application (end or in-line). Supplementary current limiters are chosen separately based on total wattage to be applied to the trac circuit. Feeds and current limiters are supplied separately and easily assembled by the installer.

Current Limiting Electrical Feeds

Catalog Number	Description	Finish	Trac Type
RCLFM11 BL	Mini End Feed	Black	1-Circuit
RCLFM11 WH	Mini End Feed	White	1-Circuit
RCLFM11 SL	Mini End Feed	Silver	1-Circuit
RCLFM11 BZ	Mini End Feed	Bronze	1-Circuit
RCLFM11 RP BL	Mini End Feed - Reverse Polarity	Black	1-Circuit
RCLFM11 RP WH	Mini End Feed - Reverse Polarity	White	1-Circuit
RCLFM11 RP SL	Mini End Feed - Reverse Polarity	Silver	1-Circuit
RCLFM11 RP BZ	Mini End Feed - Reverse Polarity	Bronze	1-Circuit
RCLF11 BL	End Feed	Black	1-Circuit
RCLF11 WH	End Feed	White	1-Circuit
RCLF11 SL	End Feed	Silver	1-Circuit
RCLF11 BZ	End Feed	Bronze	1-Circuit
RCLF21 BL	In-Line Feed	Black	1-Circuit
RCLF21 WH	In-Line Feed	White	1-Circuit
RCLF21 SL	In-Line Feed	Silver	1-Circuit
RCLF21 BZ	In-Line Feed	Bronze	1-Circuit

Current Limiting Circuit Breakers

(order separately)

Catalog Number	Description	Finish	Wattage
TCLCB 0.5A BLCK	0.5A Current Limiter	Black	60W
TCLCB 0.5A WHT	0.5A Current Limiter	White	60W
TCLCB 1A BLCK	1A Current Limiter	Black	120W
TCLCB 1A WHT	1A Current Limiter	White	120W
TCLCB 2A BLCK	2A Current Limiter	Black	240W
TCLCB 2A WHT	2A Current Limiter	White	240W
TCLCB 3A BLCK	3A Current Limiter	Black	360W
TCLCB 3A WHT	3A Current Limiter	White	360W
TCLCB 4A BLCK	4A Current Limiter	Black	480W
TCLCB 4A WHT	4A Current Limiter	White	480W
TCLCB 5A BLCK	5A Current Limiter	Black	600W
TCLCB 5A WHT	5A Current Limiter	White	600W
TCLCB 6A BLCK	6A Current Limiter	Black	720W
TCLCB 6A WHT	6A Current Limiter	White	720W
TCLCB 7A BLCK	7A Current Limiter	Black	840W
TCLCB 7A WHT	7A Current Limiter	White	840W
TCLCB 8A BLCK	8A Current Limiter	Black	960W
TCLCB 8A WHT	8A Current Limiter	White	960W
TCLCB 10A BLCK	10A Current Limiter	Black	1200W
TCLCB 10A WHT	10A Current Limiter	White	1200W
TCLCB 12A BLCK	12A Current Limiter	Black	1440W
TCLCB 12A WHT	12A Current Limiter	White	1440W
TCLCB 14A BLCK	14A Current Limiter	Black	1680W
TCLCB 14A WHT	14A Current Limiter	White	1680W

Printed in U.S.A. © 2017-2024 Acuity Brands Lighting, Inc. Rev. 03/18/24

TRAC-LITES
Current Limiting Feeds
For R Series Trac Systems

MINI END FEED

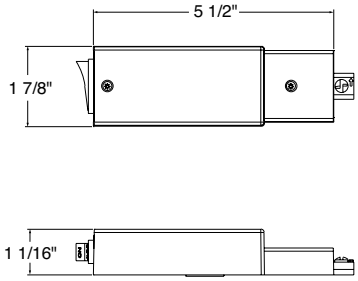

END FEED

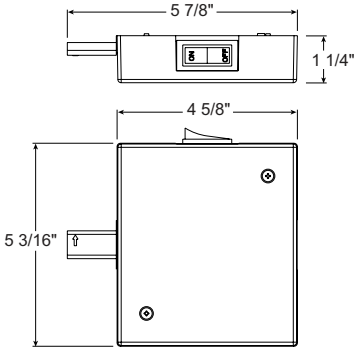

IN-LINE FEED

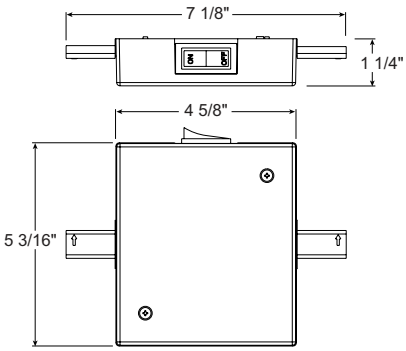

APPLICATION

Energy codes typically calculate trac lighting loads based on linear feet of installed trac. Some codes use an arbitary multiplier as low as 30 watts/foot while others use a multiplier as high as 70 watts/foot. When using the energy efficient lighting technologies available today, the connected load is typically much less than the per-foot multipliers used by most energy codes. This penalizes lighting designs that employ trac lighting and wastes available lighting watts that could be used more effectively.

Below is a typical trac lighting example. The Standard Layout consists of 100' of single circuit trac (4 circuits x 25' each) with 32 LED trac heads, each consuming 24W, for a total connected load of 768W. The scenario with the Trac-Lites Current Limiting Feeds uses the original 100' of single circuit trac, with each 25' trac section monitored by a 2-Amp supplementary current limiter that is closely matched to the actual connected load of 768W plus a small buffer. This significantly reduces the calculated watts per the energy codes.

1. Standard Layout <u>without</u> Trac-Lites Current Limiting Feeds

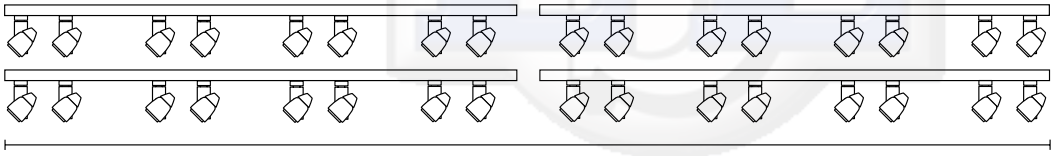

Trac length determines wattage calculation

100 ft of track = 4500W*

*Based on 45W/ft multiplier of California Title 24

Trac-Lites Current Limiting Feeds install between the branch circuit breaker and the trac lighting, solving the energy code calculation discrepancy, making the wattage calculation independent of trac length.

3. Standard Layout <u>with</u> Trac-Lites Current Limiting Feeds

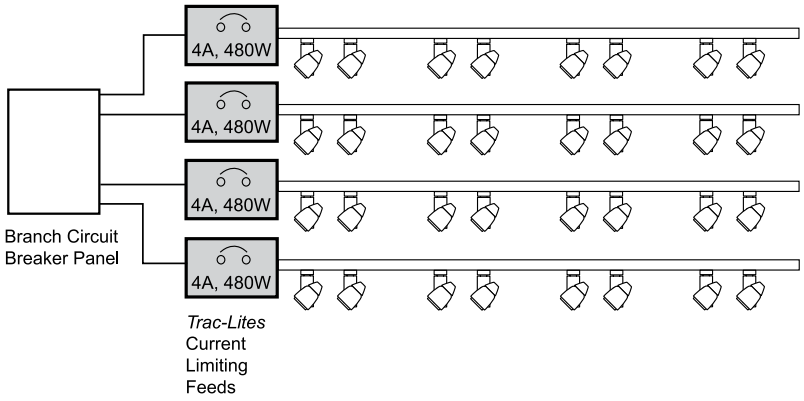

Same 100 ft of trac: 4A @ 120V = 480W (x4 circuits)
1920W total

Printed in U.S.A. © 2017-2024 Acuity Brands Lighting, Inc. Rev. 03/18/24