Pass and Seymour
Switch and Outlet Box
Part No. PH122R

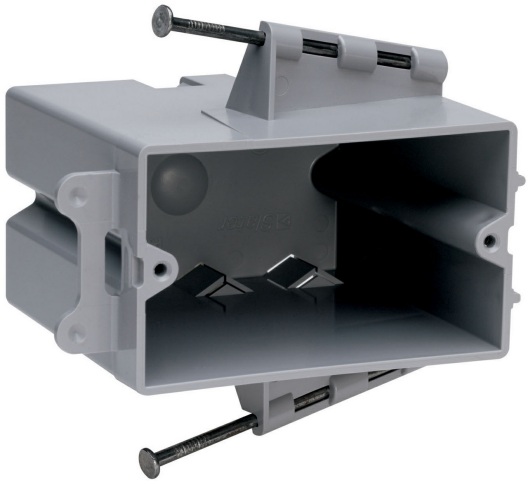

Single-Gang, Switch and Outlet Box, Horizontal,captive Mounting Nails on Each End. 100 pack.

Features & Benefits

Durable, impact-resistant thermoplastic box.

Easy installation, rectangular cutout.

Innovative extras that cut installation time.

Specifications

General Info

Product Line	Pass & Seymour	Color	Gray
UPC Number	785007042351	Country Of Origin	United States
Material	Thermoplastic	Features	Deep, Steel Stud Mount
Installation Location	Wall	Number of Knockouts	4
Application Sector	Commercial, Residential	Standard	Residential/Commercial
Warranty Type	1-Year Limited Warranty	Type	Outlet Box

Dimensions

Product Width US	2.25 in	Product Depth US	3.875 in
Product Length US	3.75 in	Cubic Capacity	22 in^3

Additional Information

RoHS Compliant	Yes	Product Environmental Profile	Yes

Technical Information

Number of Gangs	1	Indoor/Outdoor	Indoor
Cable Entry	Back, Bottom, Top	Box Shape	Rectangular
Mounting Type	Nail On		

Pass and Seymour
Switch and Outlet Box
Part No. PH122R

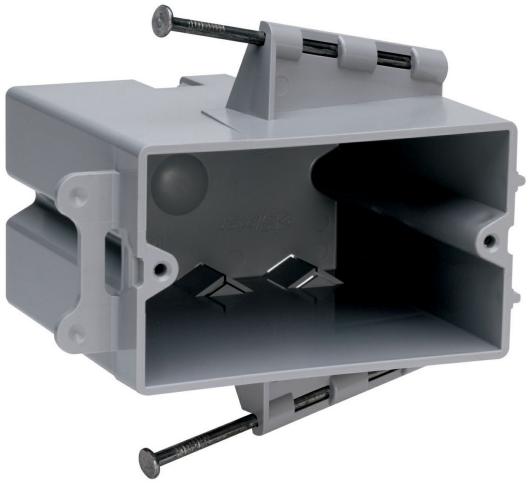

Single-Gang, Switch and Outlet Box, Horizontal,captive Mounting Nails on Each End. 100 pack.

Features & Benefits

Durable, impact-resistant thermoplastic box.

Easy installation, rectangular cutout.

Innovative extras that cut installation time.

Specifications

General Info

Product Line	Pass & Seymour	Color	Gray
UPC Number	785007042351	Country Of Origin	United States
Material	Thermoplastic	Features	Deep, Steel Stud Mount
Installation Location	Wall	Number of Knockouts	4
Application Sector	Commercial, Residential	Standard	Residential/Commercial
Warranty Type	1-Year Limited Warranty	Type	Outlet Box

Dimensions

Product Width US	2.25 in	Product Depth US	3.875 in
Product Length US	3.75 in	Cubic Capacity	22 in^3

Additional Information

RoHS Compliant	Yes	Product Environmental Profile	Yes

Technical Information

Number of Gangs	1	Indoor/Outdoor	Indoor
Cable Entry	Back, Bottom, Top	Box Shape	Rectangular
Mounting Type	Nail On		