ELLIOTT ELECTRIC SUPPLY
We Deliver...Lower Cost, Quality Products, & Personal Service
2310 N. Stallings Dr.
Nacogdoches, TX 75964-0
Phone: 9365697941
Fax: 9365604685



NFFLDLC100S 252W LED LRG FLOOD 40K 33900LM

COOPER LIGHTING SOLUTIONS

Catalog Number	NFFLDLC100S
Manufacturer	COOPER LIGHTING SOLUTIONS
Description	LED Flood Light, Construction and Storage Sites;Light Industrial Locations;Marinas and Service Areas;Parking Lots;Rail Yards, 33941 lm Brightness (Lumens), Black, 70 Color Rendering Index, 4000 K Color Temperature, 0.923 A @ 277 V;2.141 A @ 120 V Current Rating, Powder Coated Finish, 27-1/2 in;699 mm Height, IP66 IP Rating, LED Lamp Type, 16 in;406 mm Length, Glass Lens Material, Die Cast Aluminum Material, +40 °C Maximum Operating Temperature, -40 °C Minimum Operating Temperature, Slip Fitter Mount, 4 - L
Weight per unit	47.8 (lbs/each)
Product Category	Led Floodlights

Features

Ballast Type	N/A
Fixture Type	FLOODLIGHT
Shape	Rectangular
Voltage Rating	120-277V
Amperage Rating	0.91A at 277V
Battery	N/A
Lumens	33900

Dimensions and Weight

Size	29.0 IN Length 17.0 IN Width 11.5 IN Height

Descriptions

Description	252W LED LRG FLOOD 40K 33900LM
Long Description	Night Falcon Large, 4000K, 120-277V, Sliptfitter, Carbon Bronze
Product Type	NFFLD-L C100 Unv Fitter Xo
Special Features	Die-cast aluminum housing, driver compartment and driver door
Extra Long Description	ECL NFFLD-L-C100-S NFFLD-L C100 UNV

Manufacturer Information

Brand	Cooper Lighting Solutions
	LUMARK
GTIN	00080083800889
Manufacturers Part Number	NFFLD-L-C100-S
UPC	783363

2310 N. Stallings Dr.
Nacogdoches, TX 75964-0
Phone: 9365697941
Fax: 9365604685

Taxonomies, Classifications, and Categories

Category Description	LED FLOODLIGHTS, WALLPACKS, BOLLARDS & LANDSCAPE LIGHTING
Type	FLOODLIGHT

Packaging

Carton	1
Weight Per Each	47.8 (lbs/each)

Uses, Certifications, and Standards

Application	lighting
Mounting	SLIPFITTER
Standard	RoHS Compliant;1.5G Vibration Rated;DLC Certified;DLC Premium;FCC Class A;IP66 Rated;ISO Certified;UL Listed;BAA Compliant

Lumark

DESCRIPTION

The Night Falcon™ high wattage LED floodlight luminaire combines high-efficiency, precision engineered optics and energy efficiency in a cost-effective solution. Incorporating an innovative thermal management design into the fixture, that maximizes heat dissipation, results in longer fixture and LED life. The rugged, die-cast housing is IP66 and 3G vibration rated for exceptional durability and long term reliability. The Night Falcon luminaire is ideal floodlight for many area outdoor lighting situations, including parking lots, construction and storage sites, rail yards, light industrial locations, marinas and service areas.

Catalog #		**Type**
Project		
Comments		**Date**
Prepared by		

SPECIFICATION FEATURES

Construction
Heavy-duty, die cast aluminum housing, driver compartment and driver housing door. A separate driver compartment and external fins provide optimal thermal management that result in longer LED and driver life.The housing, driver compartment and optical chamber are IP66 rated. Access to the driver for maintenance is achieved with a removable driver door using pan head screws. A one-piece silicone gasket seals the door to the fixture housing. The fixture is 3G vibration rated (ANSI C136.31) to ensure durability in area and site lighting applications.

Optics
The LED chamber(s) incorporate a vacuum metalized reflector that provides high-efficiency illumination. Optics are precisely designed to shape the the NEMA 6H x 6V wide distribution and the 3H x 3V spot distribution, maximizing efficiency and application spacing. Clear glass tempered lens with full circumference form-in-place silicone gasket protects the optics from damage. Offered standard in 4000K (+/- 275K) CCT and minimum 70 CRI. Optional 3000K, 5000K and 5700K CCT.

Electrical
LED drivers are mounted to the removable die-cast aluminum doors for optimal heat sinking and ease of maintenance. 120-277V 50/60Hz, 347V 60Hz or 480V 60Hz operation. Integral 6kV surge is standard.10kV/10kA common- and differential- mode surge protection available as an option. 0-10V dimming driver is standard to accommodate controls capability such as dimming and occupancy. Standard NEMA 3-PIN twistlock photocontrol receptacle and NEMA 7-PIN twistlock photocontrol receptacles are available as options. Suitable for ambient temperatures from -40°C to 40°C. 93% lumen maintenance greater than 50,000 hours per IESNA TM-21 at 25°C.

Accessories
Heavy-duty steel top and side visors control glare and spill light. 1/8" thick UV stabilized vandal guard shields glass lens from impact when mounted at low levels. Easy to install wire guard features a heavy-gauge welded construction with corrosion resistant polyester powder coat finish to protect glass from projected objects.

Mounting
Mounting options include an integral die-cast aluminum slipfitter that fits 2-3/8" - 3" O.D. tenon. The trunnion mounting includes a 1/4" polyester powder coated galvanized steel trunnion with a 16/3 SOW cord. The trunnion mount uses an interlocking slide adjustment that is locked into place with a set screw.

Finish
Housing and cast parts finished in five-stage super TGIC polyester powder coat paint, 2.5 mil nominal thickness for superior protection against fade and wear. Standard color is carbon bronze. Additional colors available in summit white, white, grey, bronze, black, dark platinum and graphite metallic. Consult your lighting representitive at Eaton for a complete selection of standard colors.

Warranty
Five-year warranty.





NFFLD-L
NIGHT FALCON LARGE

Solid State LED

FLOODLIGHT

DIMENSIONS

Slipfitter Mount

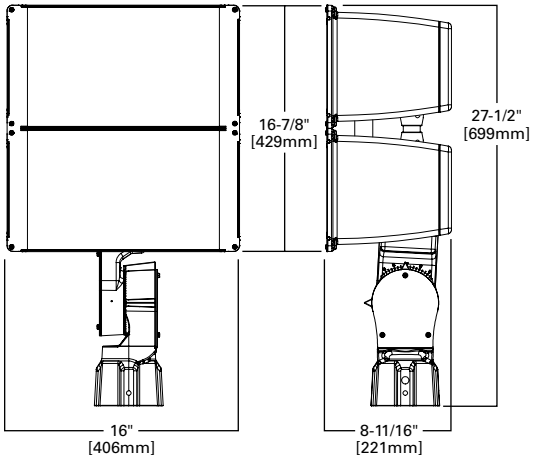

Trunnion Mount

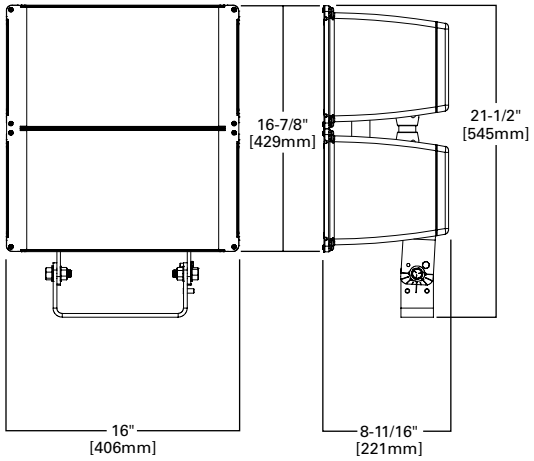

CERTIFICATION DATA
UL/cUL Wet Location Listed
IP66 Fixture and Optical Chamber
LM79/LM80 Compliant
3G Vibration Rated
RoHS Compliant
DesignLights Consortium® Qualified*

ENERGY DATA
Electronic LED Driver
> 0.9 Power Factor
< 20% Total Harmonic Distortion
120V 50/60Hz, 347V/60Hz and 480V/60Hz
-40°C Minimum Ambient Temperature Rating
+40°C Maximum Ambient Temperature Rating

EPA
Effective Projected Area (Sq. Ft.): 2.5

SHIPPING DATA
Approximate Net Weight:
48 lbs. (22 kgs.)

Powering Business Worldwide

*www.designlights.org

POWER AND LUMENS

	6x6				3x3			
C100 LED	**NFFLD-L-C100**	**NFFLD-L-C100-7060**	**NFFLD-L-C100-7050**	**NFFLD-L-C100-7030**	**NFFLD-L-C100**	**NFFLD-L-C100-7060**	**NFFLD-L-C100-7050**	**NFFLD-L-C100-7030**
Delivered Lumens	33,941	32,933	33,466	32,627	29,302	28,432	28,892	28,168
CCT (Kelvin)	4000K	5700K	5000K	3000K	4000K	5700K	5000K	3000K
CRI (Color Rendering Index)	70	70	70	70	70	70	70	70
Power Consumption (Watts)	252	252	252	252	284	284	284	284
C75 LED	**NFFLD-L-C75**	**NFFLD-L-C75-7060**	**NFFLD-L-C75-7050**	**NFFLD-L-C75-7030**	**NFFLD-L-C75**	**NFFLD-L-C75-7060**	**NFFLD-L-C75-7050**	**NFFLD-L-C75-7030**
Delivered Lumens	25,942	25,172	25,579	24,938	24,667	23,925	24,322	23,712
CCT (Kelvin)	4000K	5700K	5000K	3000K	4000K	5700K	5000K	3000K
CRI (Color Rendering Index)	70	70	70	70	70	70	70	70
Power Consumption (Watts)	179W	179W	179W	179W	236W	236W	236W	236W
C125 LED	**NFFLD-L-C125**	**NFFLD-L-C125-7060**	**NFFLD-L-C125-7050**	**NFFLD-L-C125-7030**				
Delivered Lumens	38,215	37,069	38,600	37,188				
CCT (Kelvin)	4000K	5700K	5000K	3000K				
CRI (Color Rendering Index)	70	70	70	70				
Power Consumption (Watts)	268W	268W	268W	268W				
C150 LED	**NFFLD-L-C150**	**NFFLD-L-C150-7060**	**NFFLD-L-C150-7050**	**NFFLD-L-C150-7030**				
Delivered Lumens	43,098	41,805	43,533	41,939				
CCT (Kelvin)	4000K	5700K	5000K	3000K				
CRI (Color Rendering Index)	70	70	70	70				
Power Consumption (Watts)	316W	316W	316W	316W				
C175 LED	**NFFLD-L-C175**	**NFFLD-L-C175-7060**	**NFFLD-L-C175-7050**	**NFFLD-L-C175-7030**				
Delivered Lumens	48,028	46,587	48,512	46,737				
CCT (Kelvin)	4000K	5700K	5000K	3000K				
CRI (Color Rendering Index)	70	70	70	70				
Power Consumption (Watts)	371W	371W	371W	371W				

CURRENT DRAW

Voltage (V)	Model Series						
	6x6					3x3	
	NFFLD-L-C75	NFFLD-L-C100	NFFLD-L-C125	NFFLD-L-C150	NFFLD-L-C175	NFFLD-L-C75	NFFLD-L-C100
	Current (A)	Current (A)	Current (A)	Current (A)	Current (A)	Current (A)	Current (A)
120V	1.499	2.141	2.279	2.688	3.155	2.008	2.391
277V	0.661	0.923	0.991	1.155	1.341	0.859	1.039
347V	0.539	0.760	0.784	0.924	1.082	0.692	0.841
480V	0.398	0.548	0.565	0.666	0.772	0.509	0.639

LUMEN MAINTENANCE

Ambient Temperature	TM-21 Lumen Maintenance (60,000 Hours)	Theoretical L70 (Hours)
6H x 6V (Wide)		
25°C	90.0%	>393,000
40°C	88.9%	>180,000
3H x 3V (Spot)		
25°C	93.38%	>317,000
40°C	92.34%	>271,000

LUMEN MULTIPLIER

Ambient Temperature	Lumen Multiplier
10°C	1.03
15°C	1.02
25°C	1.00
40°C	0.97

DIMENSIONS

Yoke Mount

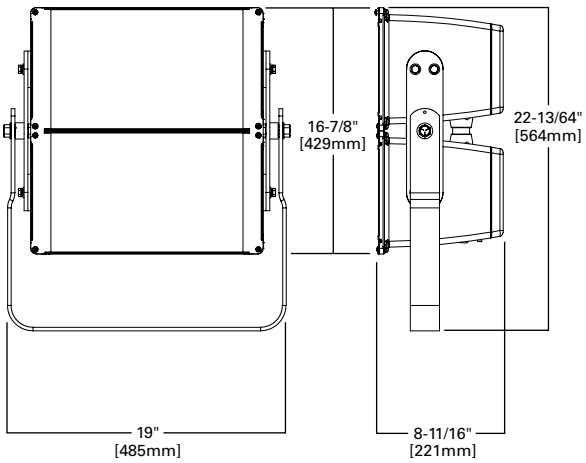

TRUNNION MOUNT DRILL PATTERN

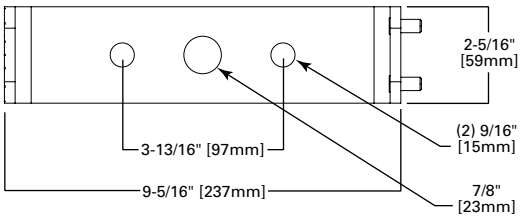

YOKE MOUNT DRILL PATTERN

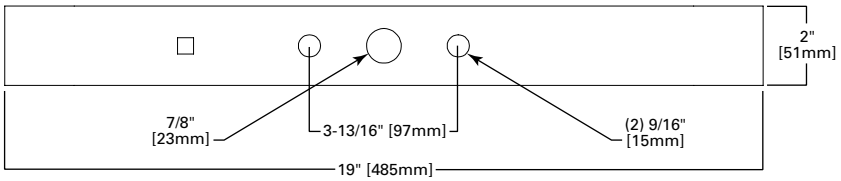

ACCESSORIES

Top and Side Visors

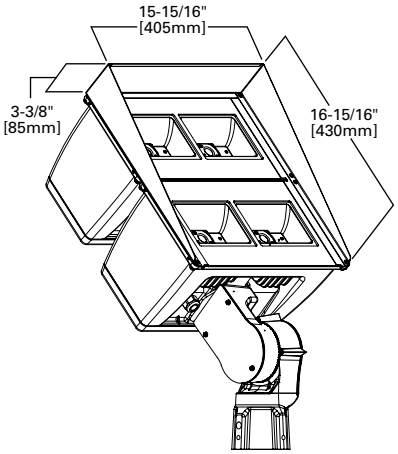

Wire Guard

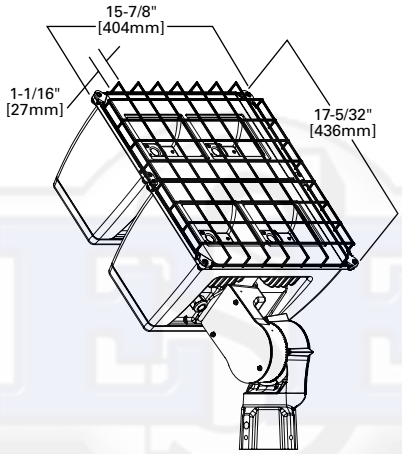

Vandal Shield

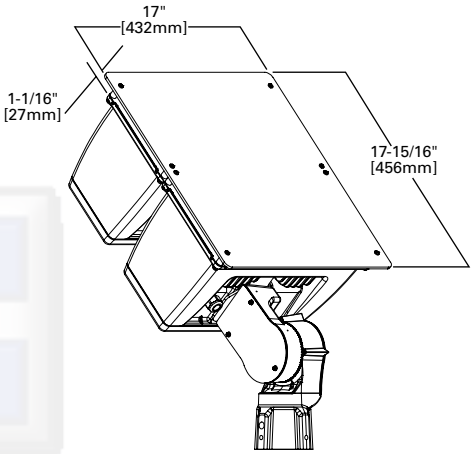

Powering Business Worldwide

Eaton
1121 Highway 74 South
Peachtree City, GA 30269
P: 770-486-4800
www.eaton.com/lighting

Specifications and dimensions subject to change without notice.

CONTROL OPTIONS

0-10V (D)
This fixture is offered standard with 0-10V dimming driver(s). The D option provides 0-10V dimming wire leads for use with a lighting control panel or other control method.

Photocontrol (PER and PER7)
Photocontrol receptacles (PER and PER7) provide a flexible solution to enable "dusk-to-dawn" lighting by sensing light levels. Advanced control systems compatible with NEMA 7-pin standards can be utilized with the PER7 receptacle.

WaveLinx Wireless Outdoor Lighting Control Module (WOLC-7P-10A)
The 7-pin wireless outdoor lighting control module enables WaveLinx to control outdoor area, site and flood lighting. WaveLinx controls outdoor lighting using schedules to provide ON, OFF and dimming controls based on astronomic or time schedules based on a 7 day week.

ORDERING INFORMATION

Sample Number: NFFLD-L-C100-D-UNV-66-S-CB-PER

Product Family [1,2]	Light Engine [3]	Driver [4]	Voltage	Distribution	Mounting	Color
NFFLD-L=Night Falcon Large	**C100**=33,900 Nominal Lumens **C75**=25,900 Nominal Lumens **C125**=38,000 Nominal Lumens **C150**=43,000 Nominal Lumens **C175**=48,000 Nominal Lumens	**D**=Dimming (0-10V)	**UNV**=120-277V **347**=347V **480**=480V [5]	**66**=NEMA 6H x 6V Wide **33**=NEMA 3H x 3V Spot [6]	**S**=Slipfitter [7] **T**=Trunnion **Y**=Yoke	**CB**=Carbon Bronze (Standard) **BK**=Black **BZ**=Bronze **AP**=Grey **WH**=White **WHT**=Summit White **DP**=Dark Platinum **GM**=Graphite Metallic

Options (Add as Suffix)	**Accessories** (Order Separately) [10]
7030=70 CRI / 3000K [8] **7050**=70 CRI / 5000K [8] **7060**=70 CRI / 5700K [8] **PER**=NEMA 3-PIN Twistlock Photocontrol Receptacle **PER7**=NEMA 7-PIN Twistlock Photocontrol Receptacle [9] **10K**=10kV/10kA UL 1449 Surge Protective Device	**FA63**=3" O.D. Surface Mount Bracket **RAB-X**=Right Angle Bracket for Slipfitter **SAB-X**=Steel Angle Bracket for Trunnion **TYS-XX**=Slipfitter Adapter for 2-3/8", 3" or 3-1/2" O.D. Tenon **OA1223**=10kV/10kA UL 1449 Surge Protective Device Replacement **OA/RA1013**=Photocontrol Shorting Cap **OA/RA1014**=NEMA Photocontrol - 120V **OA/RA1016**=NEMA Photocontrol - Multi-Tap **OA/RA1027**=NEMA Photocontrol - 480V **OA/RA1201**=NEMA Photocontrol - 347V **TS2HW/NFFLD-XX**=Top and Side Visors [11] **VSHW/NFFLD**=Vandal Shield [11] **WGHW/NFFLD**=Wire Guard [11] **WOLC-7P-10A**=WaveLinx Outdoor Control Module (7-pin) [12]

NOTES:
1. DesignLights Consortium® Qualified. Refer to www.designlights.org Qualified Products List under Family Models for details.
2. Customer is responsible for engineering analysis to confirm pole and fixture compatibility for all applications. Refer to our pole white paper WP513001EN for additional support information.
3. Standard 4000K CCT and minimum 70 CRI. Consult IES file for actual lumen output.
4. Consult factory for driver surge protection values.
5. Only for use with 480V Wye systems. Per NEC, not for use with ungrounded systems, impedance grounded systems or corner grounded systems (commonly known as Three Phase Three Wire Delta, Three Phase High Leg Delta and Three Phase Corner Grounded Delta systems).
6. Only available in C75 and C100 light engines.
7. Fits 2-3/8" to 3" O.D. tenon, wire leads run through slipfitter.
8. Extended lead times apply. Use dedicated IES files for 3000K, 5000K and 5700K when performing layouts. These files are published on the Night Falcon large luminaire product page on the website.
9. Must order with dimming driver.
10. Replace XX with paint color.
11. Cannot combine TS2HW/NFFLD (Top and Side Visor), VSHW/NFFLD (Vandal Shield), or WGHW/NFFLD (Wire Guard), limited to one external guard per fixture.
12. Requires 7-pin NEMA twistlock photocontrol receptacle.

STOCK ORDERING INFORMATION

Stock Sample Number: NFFLD-L-C100-S

Series	Light Engine	Mounting	Voltage
NFFLD-L=Night Falcon Large	**C100**=33,900 Nominal Lumens **C75**=25,900 Nominal Lumens	**S**=Slipfitter **T**=Trunnion	**[BLANK]**=120-277V **347**=347V

NOTES: Options not available with stock products. Order accessories as separate items for field installation. Refer to standard ordering information to add options. Refer to In-Stock Guide for availability. Stock fixture is 4000K, 6x6 distribution, dimming, 120-277V or 347V, carbon bronze only.