ELLIOTT ELECTRIC SUPPLY
We Deliver...Lower Cost, Quality Products, & Personal Service
2310 N. Stallings Dr.
Nacogdoches, TX 75964-0
Phone: 9365697941
Fax: 9365604685

NFFLDC25T TRUN 85W LED FLOOD 40K 10,530LM

COOPER LIGHTING SOLUTIONS

Catalog Number	NFFLDC25T
Manufacturer	COOPER LIGHTING SOLUTIONS
Description	LED Flood Light, Die-Cast Aluminum, 120 to 277 V ac;347 V ac;480 V ac, 85 W, 70, 10530 lm Brightness (Lumens), 4000 K, Powder Coat, 15-15/16 in Length, 8-11/16 in Width, 12-11/16 in Height, Tempered Glass Lens Material, Trunion Mount, +40 °C Operating Temperature, -40 °C Operating Temperature, 60000 h Average Life, 5 yr Warranty, 20 lb
Weight per unit	19.8 (lbs/each)
Product Category	Led Floodlights

Features

Ballast Type	N/A
Fixture Type	FLOODLIGHT
Lamp Type	LED
Number Of Lamps	2
Shape	Rectangular
Voltage Rating	120-277V
Amperage Rating	0.30A at 277V
Battery	N/A
Lumens	11666
Media	Yes

Dimensions and Weight

Size	18.2 IN Length 17.5 IN Width 9.75 IN Height

Descriptions

Description	TRUN 85W LED FLOOD 40K 10,530LM
Long Description	Night Falcon, 4000K, 120-277V, Trunnion, Carbon Bronze
Product Type	NFFLD, C25, Unv, Carbon Bronze, Trunnion
Special Features	Die-cast aluminum housing, driver compartment and driver door
Extra Long Description	ECL NFFLD-C25-T NFFLD,C25,UNV,CARBO

Manufacturer Information

Brand	Cooper Lighting Solutions
	LUMARK
GTIN	00080083801220
Manufacturers Part Number	NFFLD-C25-T
UPC	783363

Taxonomies, Classifications, and Categories

Category Description	LED FLOODLIGHTS, WALLPACKS, BOLLARDS & LANDSCAPE LIGHTING
Type	FLOODLIGHT

2310 N. Stallings Dr.
Nacogdoches, TX 75964-0
Phone: 9365697941
Fax: 9365604685

Packaging

Carton	1
Weight Per Each	19.8 (lbs/each)

Uses, Certifications, and Standards

Application	lighting
Mounting	TRUNNION
Standard	UL Listed;DLC Certified;DLC Premium;1.5G Vibration Rated;IP66 Rated;ISO Certified;RoHS Compliant;FCC Class A;BAA Compliant

Lumark

DESCRIPTION

The Night Falcon™ LED floodlight luminaire combines high-efficiency optics, superior thermal management and energy efficiency in a cost-effective solution. The compact, robust design incorporates a separate driver compartment for maximum heat dissipation to insure longevity of both the fixture and the LEDs. The Night Falcon luminaire uses precision engineered optics delivering superior uniformity and excellent illumination to the targeted application. Typical applications include area lighting for security, building facade lighting, accent and signage lighting in both commercial and industrial applications. The Night Falcon luminaire is UL/cUL listed for wet locations and is IP66 rated.

Catalog #		**Type**
Project		
Comments		**Date**
Prepared by		

SPECIFICATION FEATURES

Construction
Heavy-duty, die-cast aluminum housing, driver compartment and driver housing door. A separate driver compartment and external fins provide optimal thermal management that result in longer LED and driver life.The housing, driver compartment and optical chamber are IP66 rated. Access to the driver for maintenance is achieved with a removable driver door using pan head screws. A one-piece silicone gasket seals the door to the fixture housing. The fixture is 3G vibration rated (ANSI C136.31) to ensure durability in area and site lighting applications. Suitable for mounting within 4' (1.2m) of the ground.

Optics
The LED chamber incorporates a vacuum metalized reflector that provides high-efficiency illumination. Optics are precisely designed to shape the the NEMA 6H x 6V wide distribution and the 3H x 3V spot distribution, maximizing efficiency and application spacing. Clear glass tempered lens with full circumference form-in-place silicone gasket protects the optics from damage. Offered standard in 4000K (+/- 275K) CCT and minimum 70 CRI. Optional 5700K, 5000K and 3000K CCT and minimum 70 CRI are available.

Electrical
LED driver is mounted to the removable die-cast aluminum door for optimal heat sinking and ease of maintenance. 120-277V 50/60Hz, 347V 60Hz or 480V 60Hz operation. Integral 6kV surge is standard.10kV/10kA common- and differential- mode surge protection available as an option. 0-10V dimming driver is available to accommodate controls capability such as dimming and occupancy. Standard NEMA 3-PIN twistlock photocontrol receptacle and NEMA 7-PIN twistlock photocontrol receptacles are available as options. Suitable for ambient temperatures from -40°C to 40°C. Optional 50°C HA (high ambient) available. 92% lumen maintenance greater than 60,000 hours per IESNA TM-21 at 25°C.

Accessories
Heavy-duty steel top and side visors control glare and spill light. 1/8" thick UV stabilized vandal guard shields glass lens from impact when mounted at low levels. Easy to install wire guard features a heavy-gauge welded construction with corrosion resistant polyester powder coat finish to protect glass from projected objects.

Mounting
Mounting options include an integral die-cast aluminum slipfitter that is preset to a tilt of 45°. The knuckle base is supplied with a tooth lock adjustment that can be adjusted in 5° increments to provide flexibility in aiming the fixture from a variety of surfaces. Visual 15° adjustment indicators on the knuckle allow for 180° field rotation of the floodlight assembly. The slipfitter fits standard 2-3/8"-3" O.D. tenon. The trunnion mounting includes a 3/16" polyester powder coated galvanized steel trunnion with a 16/3 SOW cord. The trunnion mount uses an interlocking slide adjustment that is locked into place with a set screw.

Finish
Housing and cast parts finished in five-stage super TGIC polyester powder coat paint, 2.5 mil nominal thickness for superior protection against fade and wear. Standard color is carbon bronze. Additional colors available in summit white, white, grey, bronze, black, dark platinum and graphite metallic. Consult your lighting representitive at Eaton for a complete selection of standard colors.

Warranty
Five-year warranty.

DIMENSIONS

Slipfitter Mount

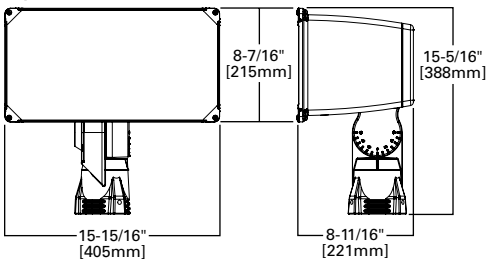

Trunnion Mount

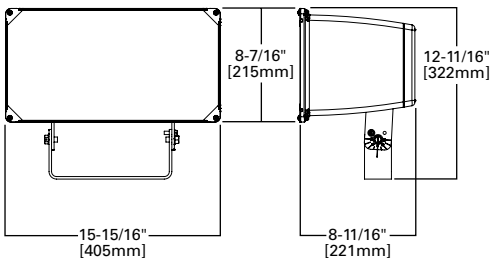

Yoke Mount

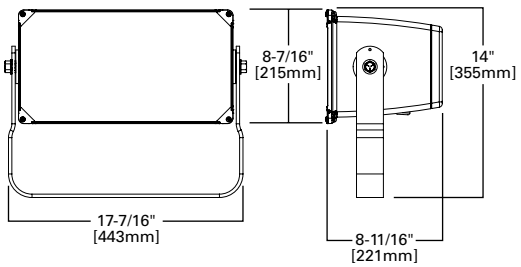

*www.designlights.org





NFFLD
NIGHT FALCON

Solid State LED

FLOODLIGHT

CERTIFICATION DATA
UL/cUL Wet Location Listed
IP66 Fixture and Optical Chamber
LM79/LM80 Compliant
3G Vibration Rated
RoHS Compliant
DesignLights Consortium® Qualified*

ENERGY DATA
Electronic LED Driver
> 0.9 Power Factor
< 20% Total Harmonic Distortion
120V 50/60Hz, 347V/60Hz and 480V/60Hz
-40°C Minimum Ambient Temperature Rating
+40°C Maximum Ambient Temperature Rating

EPA
Effective Projected Area (Sq. Ft.): 1.25

SHIPPING DATA
Approximate Net Weight:
20 lbs. (9.09 kgs.)

Powering Business Worldwide

POWER AND LUMENS

	6x6				3x3			
C25 LED	**NFFLD-C25**	**NFFLD-C25-7030**	**NFFLD-C25-7050**	**NFFLD-C25-7060**	**NFFLD-C25**	**NFFLD-C25-7030**	**NFFLD-C25-7050**	**NFFLD-C25-7060**
Delivered Lumens	10,530	10,122	10,383	10,217	10,272	9,874	10,128	9,967
CCT (Kelvin)	4000K	3000K	5000K	5700K	4000K	3000K	5000K	5700K
CRI (Color Rendering Index)	70	70	70	70	70	70	70	70
Power Consumption (Watts)	85W	85W	85W	85W	93W	93W	93W	93W
C40 LED	**NFFLD-C40**	**NFFLD-C40-7030**	**NFFLD-C40-7050**	**NFFLD-C40-7060**	**NFFLD-C40**	**NFFLD-C40-7030**	**NFFLD-C40-7050**	**NFFLD-C40-7060**
Delivered Lumens	16,932	16,268	16,686	16,421	14,113	13,567	13,916	13,694
CCT (Kelvin)	4000K	3000K	5000K	5700K	4000K	3000K	5000K	5700K
CRI (Color Rendering Index)	70	70	70	70	70	70	70	70
Power Consumption (Watts)	128W	128W	128W	128W	143W	143W	143W	143W
C55 LED	**NFFLD-C55**	**NFFLD-C55-7030**	**NFFLD-C55-7050**	**NFFLD-C55-7060**				
Delivered Lumens	19,943	19,407	20,144	20,285				
CCT (Kelvin)	4000K	3000K	5000K	5700K				
CRI (Color Rendering Index)	70	70	70	70				
Power Consumption (Watts)	145W	145W	145W	145W				
C70 LED	**NFFLD-C70**	**NFFLD-C70-7030**	**NFFLD-C70-7050**	**NFFLD-C70-7060**				
Delivered Lumens	23,797	23,157	24,037	24,205				
CCT (Kelvin)	4000K	3000K	5000K	5700K				
CRI (Color Rendering Index)	70	70	70	70				
Power Consumption (Watts)	184W	184W	184W	184W				

CURRENT DRAW

Voltage (V)	**Model Series**					
	6x6				**3x3**	
	NFFLD-C25	**NFFLD-C40**	**NFFLD-C55**	**NFFLD-C70**	**NFFLD-C25**	**NFFLD-C40**
	Current (A)	**Current (A)**	**Current (A)**	**Current (A)**	**Current (A)**	**Current (A)**
120V	0.708	1.070	1.2299	1.5695	0.778	1.190
277V	0.340	0.465	0.535	0.6726	0.340	0.531
347V	0.251	0.377	0.4213	0.5334	0.271	0.419
480V	0.195	0.273	0.3044	0.3831	0.207	0.320

LUMEN MAINTENANCE

Ambient Temperature	**TM-21 Lumen Maintenance** (60,000 Hours)	**Theoretical L70** (Hours)
6H x 6V (Wide)		
25°C	> 94.55%	> 388,000
40°C	> 93.58%	> 327,000
50°C	--	--
3H x 3V (Spot)		
25°C	>92.18%	>262,000
40°C	>91.81%	>249,000

LUMEN MULTIPLIER

Ambient Temperature	**Lumen Multiplier**
10°C	1.03
15°C	1.02
25°C	1.00
40°C	0.97
50°C	0.96

DRILLING PATTERNS

Trunnion Mount

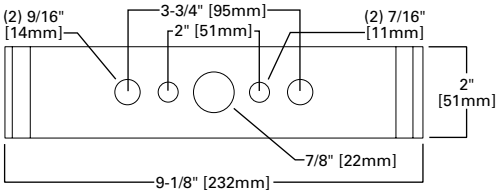

Yoke Mount

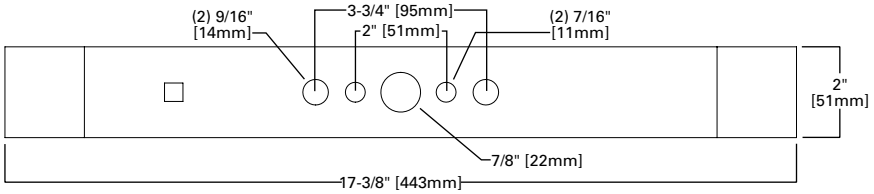

OPTIONAL INTEGRATED SENSOR

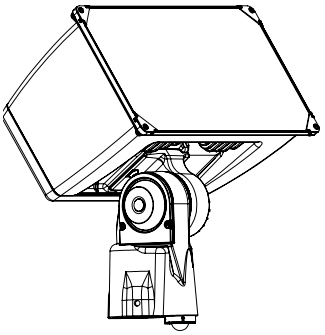

ACCESSORIES

Top and Side Visors

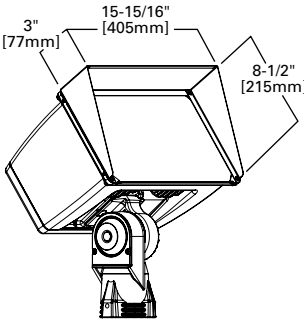

Wire Guard

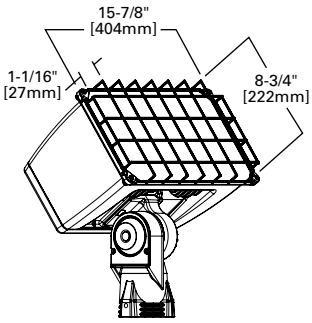

Vandal Shield

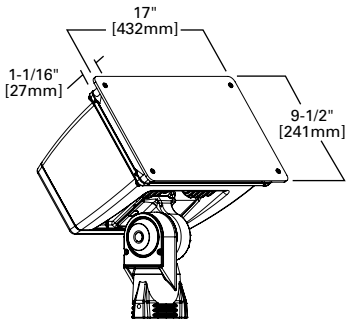

CONTROL OPTIONS

0-10V (D)
This fixture is offered standard with 0-10V dimming driver(s). The DIM option provides 0-10V dimming wire leads for use with a lighting control panel or other control method.

Photocontrol (PER and PER7)
Photocontrol receptacles (PER and PER7) provide a flexible solution to enable “dusk-to-dawn” lighting by sensing light levels. Advanced control systems compatible with NEMA 7-pin standards can be utilized with the PER7 receptacle.

Dimming Occupancy Sensor (MSP/DIM-LXX and MSP-LXX)
These sensors are factory installed in the luminaire housing. When the MSP/DIM-LXX sensor option is selected, the occupancy sensor is connected to a dimming driver and the entire luminaire dims when there is no activity detected. When activity is detected, the luminaire returns to full light output. The MSP/DIM sensor is factory preset to dim down to approximately 50 percent power with a time delay of five minutes. The MSP-LXX sensor is factory preset to turn the luminaire off after five minutes of no activity.

These occupancy sensors includes an integral photocell that can be activated with the ISHH-01 accessory for “dusk-to-dawn” control or daylight harvesting -- the factory preset is OFF. The ISHH-01 is a wireless tool utilized for changing the dimming level, time delay, sensitivity and other parameters. A variety of sensor lens are available to optimize the coverage pattern for mounting heights from 8’-30’.

For mounting heights from 12' to 30' (-L30)

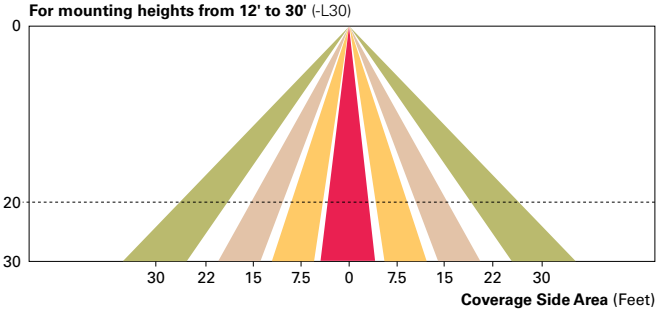

For mounting heights from 8' to 12' (-L12)

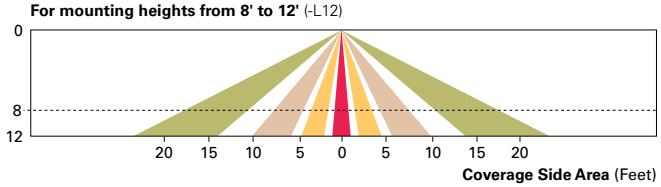

WaveLinx Wireless Outdoor Lighting Control Module (WOLC-7P-10A)
The 7-pin wireless outdoor lighting control module enables WaveLinx to control outdoor area, site and flood lighting. WaveLinx controls outdoor lighting using schedules to provide ON, OFF and dimming controls based on astronomic or time schedules based on a 7 day week.

ORDERING INFORMATION

Sample Number: NFFLD-C40-E-UNV-66-S-CB-PER

Product Family [1]	Light Engine [2]	Driver [3]	Voltage	Distribution	Mounting	Color
NFFLD=Night Falcon LED Floodlight	**C25**=10,500 Nominal Lumens **C40**=16,900 Nominal Lumens **C55**=20,000 Nominal Lumens **C70**=24,000 Nominal Lumens	**E**=Non-Dimming **D**=Dimming (0-10V)	**UNV**=120-277V **347**=347V [4] **480**=480V [4]	**66**=NEMA 6H x 6V Wide **33**=NEMA 3H x 3V Spot [5]	**S**=Slipfitter [6] **T**=Trunnion **Y**=Yoke	**CB**=Carbon Bronze (Standard) **BK**=Black **BZ**=Bronze **AP**=Grey **WH**=White **WHT**=Summit White **DP**=Dark Platinum **GM**=Graphite Metallic

Options (Add as Suffix)	**Accessories** (Order Separately) [12]
7030=70 CRI / 3000K [7] **7050**=70 CRI / 5000K [7] **7060**=70 CRI / 5700K [7] **PER**=NEMA 3-PIN Twistlock Photocontrol Receptacle **PER7**=NEMA 7-PIN Twistlock Photocontrol Receptacle [8] **10K**=10kV/10kA UL 1449 Surge Protective Device **D10**=<10% Dimming [8] **HA**=50°C High Ambient Temperature [9] **MSP/DIM-L12**=Integrated Sensor for Dimming Operation, 8' - 12' Mounting Height [10, 11] **MSP/DIM-L30**=Integrated Sensor for Dimming Operation, 12' - 30' Mounting Height [10, 11] **MSP-L12**=Integrated Sensor for ON/OFF Operation, 8' - 12' Mounting Height [10, 11] **MSP-L30**=Integrated Sensor for ON/OFF Operation, 12' - 30' Mounting Height [10, 11]	**FA63**=3" O.D. Surface Mount Bracket [13] **OA1223**=10kV/10kA UL 1449 Surge Protective Device Replacement **OA/RA1013**=Photocontrol Shorting Cap **OA/RA1014**=NEMA Photocontrol - 120V **OA/RA1016**=NEMA Photocontrol - Multi-Tap **OA/RA1027**=NEMA Photocontrol - 480V **OA/RA1201**=NEMA Photocontrol - 347V **RAB-XX**=Right Angle Pipe Bracket for Slipfitter **SAB-XX**=Steel Angle Bracket for Trunnion **TYS-XX**=Slipfitter Adapter for 2-3/8", 3" or 3-1/2" O.D. Tenon [14] **TS2/NFFLD-XX**=Top and Side Visors [15] **VS/NFFLD**=Vandal Shield [15] **WG/NFFLD**=Wire Guard [15] **ISHH-01**=Integrated Sensor Programming Remote **WOLC-7P-10A**=WaveLinx Outdoor Control Module (7-pin) [16]

NOTES:
1. DesignLights Consortium® Qualified. Refer to www.designlights.org Qualified Products List under Family Models for details.
2. Standard 4000K CCT and minimum 70 CRI. Consult IES file for actual lumen output.
3. Consult factory for driver surge protection values.
4. Not recommended for use with ungrounded, delta configured systems.
5. Only available in C25 adn C40 light engines.
6. Fits 2-3/8" to 3" O.D. tenon, wire leads run through slipfitter.
7. Extended lead times apply. Use dedicated IES files for 3000K and 5700K when performing layouts. These files are published on the Night Falcon luminaire product page on the website.
8. Must order with dimming driver.
9. Not available with 3H x 3V spot distribution.
10. 0-10V dimming driver required. Integrated sensor option only available in slipfitter mounting.
11. Not available with Photocontrol.
12. Replace XX with color designation. Additional brackets and adaptors available on the poles product page on the website.
13. Not available with tenon mount.
14. Not available with slipfitter mount.
15. Cannot combine TS2 (Top and Side Visor), VS (Vandal Shield), or WG (Wire Guard), limited to one external guard per fixture.
16. Requires 7-pin NEMA twistlock photocontrol receptacle.

STOCK ORDERING INFORMATION

Stock Sample Number: NFFLD-C40-S

Series	Light Engine	Mounting	Voltage
NFFLD=Night Falcon	**C25**=10,500 Nominal Lumens **C40**=16,900 Nominal Lumens	**S**=Slipfitter **T**=Trunnion	**[BLANK]**=120-277V **347**=347V

NOTES: Options not available with stock products. Order accessories as separate items for field installation. Refer to standard ordering information to add options. Refer to In-Stock Guide for availability. Stock fixture is 4000K, non-dimming, 120-277V or 347V 6Hx6V, carbon bronze only.