ELLIOTT ELECTRIC SUPPLY

We Deliver...Lower Cost, Quality Products, & Personal Service

2310 N. Stallings Dr.
Nacogdoches, TX 75964-0
Phone: 9365697941
Fax: 9365604685



MP17VG 17" MINI MIGHT POST VERDE

RAB LIGHTING

Catalog Number	MP17VG
Manufacturer	RAB LIGHTING
Description	Landscape Mighty Post Mini 17 Inches 2 Inches Diameter Verde Green
Weight per unit	1.5 (lbs/each)
Product Category	Lighting Poles

Descriptions

Description	17" MINI MIGHT POST VERDE
Long Description	Landscape Mighty Post Mini 17 Inches 2 Inches Diameter Verde Green
Product Type	Mighty Post Mini 17 Inch 2 Inch Diamet
Extra Long Description	RAB MP17VG MIGHTY POST MINI 17 Inch

Manufacturer Information

Brand	RAB Lighting Inc Rab Lighting
GTIN	00019813100616
Manufacturers Part Number	MP17VG
UPC	885360

Taxonomies, Classifications, and Categories

Category Description	Fuses & Fuse Accessories
Type	ACCESSORY POST

Packaging

Carton	1
Package	24
Weight Per Each	1.5 (lbs/each)

Uses, Certifications, and Standards

Mounting	CEILING

MP17VG

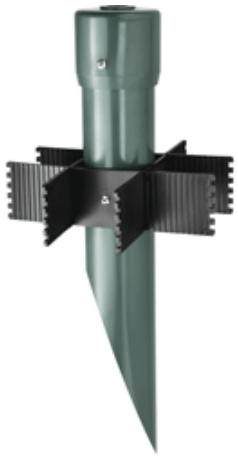

17" PVC mounting post for lighter weight ground mounted landscape lighting. Post is 2" pipe (2 3/8" O.D.) for cleaner look. In-ground stabilizing grid included.

Color: Verde green

Weight: 1.5 lbs

Project:	Type:
Prepared By:	Date:

Technical Specifications

Compliance

UL Listed:

Suitable for wet locations. Fixtures with ground wire must be used.

Construction

Post Materials:

UL Schedule 40 PVC pipe

Set Screw:

Locks cap to post and prevents rotation

Cap:

PVC

Other

Patents:

Pat. D424,524.

Buy American Act Compliance:

RAB values USA manufacturing! Upon request, RAB may be able to manufacture this product to be compliant with the Buy American Act (BAA). Please contact customer service to request a quote for the product to be made BAA compliant.

Copyright © 2021 RAB Lighting All Rights Reserved Note: Specifications are subject to change at any time without notice

MP17VG

Dimensions

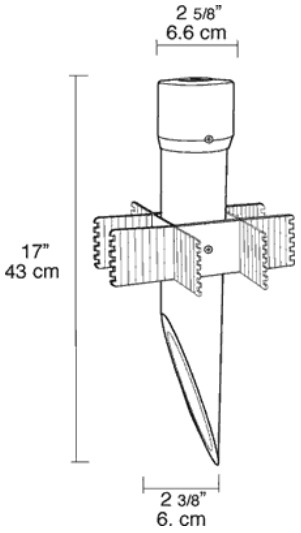

Features

- Cleanly styled molded PVC cap
- Rugged extruded PVC pipe
- Sturdy "Ground Grabber" stabilizer with teeth and ribs for maximum stability
- Also available a 19" PVC post and an extra rugged Die cast aluminum cap for heavier HID floods
- Rounded edges protect wires
- 1/2" threaded hole fits standard floodlights & lawn lights
- Post Adapter lets you add outlets and sensors

Copyright © 2021 RAB Lighting All Rights Reserved Note: Specifications are subject to change at any time without notice