ELLIOTT ELECTRIC SUPPLY
We Deliver...Lower Cost, Quality Products, & Personal Service
2310 N. Stallings Dr.
Nacogdoches, TX 75964-0
Phone: 9365697941
Fax: 9365604685



LU300 300W LUMINATOR 110 SENSOR +2 FLOODS BRZ

RAB LIGHTING

Catalog Number	LU300
Manufacturer	RAB LIGHTING
Description	Luminator Sensor, PAR-38 Lamp, 2 Lamps, 110 ° Viewing Angle, 15-1/2 in Length, Non Dimmable, 120 V ac, 2.5 A, 1 W, 150 W (PAR-38 Lamp), Polycarbonate Material, White, Main Power Source, 1.4 lb
Weight per unit	1.2 (lbs/each)
Product Category	Occupancy Sensing Lighting

Features

Wattage	300

Material, Color, and Finish

Color	Bronze

Descriptions

Description	300W LUMINATOR 110 SENSOR +2 FLOODS BRZ
Long Description	Outdoor Sensors Luminator 110 Sensor 2 Floods 300W 120V Round Cover Bronze
Product Type	Luminator 110 Senr Sad 2FLOODS 300W
Special Features	NONFIXTURE
Extra Long Description	RAB LU300 LUMINATOR 110 SENR SAD 2F

Manufacturer Information

Brand	RAB Lighting Inc
GTIN	00019813730004
UPC	885360

Taxonomies, Classifications, and Categories

Category Description	Commercial dimmers, motion sensors, & photo cells
Type	SENSOR

Packaging

Carton	1
Package	12
Weight	1.4
Weight Per Each	1.2 (lbs/each)

Uses, Certifications, and Standards

Application	Outdoor
Mounting	CEILING

LU300



Luminator sensor with two weatherproof, corrosion-proof floodlights and round mounting plate. PRE-WIRED FOR EASY INSTALLATION. Both floods and sensor have universal ball swivels for easy tool-less adjustment. Lamps not supplied.

Color: Bronze

Weight: 1.2 lbs

Project:	Type:
Prepared By:	Date:

Technical Specifications

Compliance

UL Listed:
Suitable for wet locations

Electrical

Voltage:
120V AC 60Hz

Power Consumption:
1W

Wall Switch Manual Override:
Two flip logic prevents activation by momentary power outages. Override resets to auto after 6 hours or at dawn. No extra wiring needed.

Surge Protection:
Withstands up to 3000 volts

Switching Capacity:
300W incandescent @ 120 volts, 2.5 amps.

Sensor Specifications

Time Adjustment:
8 seconds to 10 minutes

Photo Control:
Deactivates lights during daylight. Fully adjustable for 24 hour operation or custom applications.

Detector Sensitivity:
Adjustable from 100% to 50%

Auto Test Logic:
5 minutes of test time when powered. Resets to auto mode without adjustment.

Sensor Housing:
Made of tough, corrosion resistant polycarbonate

Detection:
110° view

Construction

Floodlights:
Made of tough, corrosion-resistant polycarbonate. Accepts PAR-38 lamps, medium base, 150W max. Lamps not included.

Other

Warranty:
3-year sensor warranty

Buy American Act Compliance:
RAB values USA manufacturing! Upon request, RAB may be able to manufacture this product to be compliant with the Buy American Act (BAA). Please contact customer service to request a quote for the product to be made BAA compliant.

Copyright © 2024 RAB Lighting All Rights Reserved Note: Specifications are subject to change at any time without notice

Dimensions

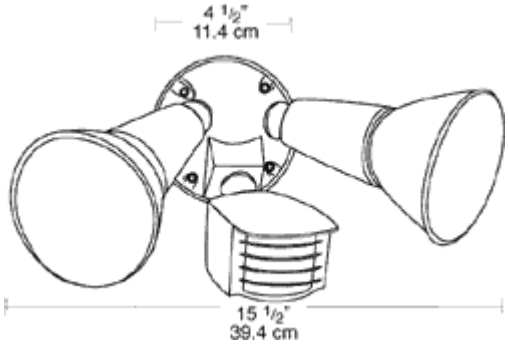

Features

- 300 Watt switching capacity
- Manual override
- Fully adjustable positioning
- 110° double look down lens
- Tough, vandal resistant lens and grill
- LS300 fits 1/2" standard threaded cover plates
- 3-Year Warranty

Copyright © 2024 RAB Lighting All Rights Reserved Note: Specifications are subject to change at any time without notice