ELLIOTT ELECTRIC SUPPLY
We Deliver...Lower Cost, Quality Products, & Personal Service
2310 N. Stallings Dr.
Nacogdoches, TX 75964-0
Phone: 9365697941
Fax: 9365604685



LSLFLEDA *DISCONTINUED* SPOT HOOD REFL KIT BRZ

RAB LIGHTING

Catalog Number	LSLFLEDA
Manufacturer	RAB LIGHTING
Description	Floodlights Spot Hood Reflector Kit Lfled5 With Lens Bronze
Weight per unit	0.2625 (lbs/each)
Product Category	Lighting Lenses

Features

Media	Yes

Descriptions

Description	*DISCONTINUED* SPOT HOOD REFL KIT BRZ
Long Description	Floodlights Spot Hood Reflector Kit Lfled5 With Lens Bronze
Product Type	Spot Hood Refl Kit LFLED5 W/ Lens BZ
Extra Long Description	RAB LSLFLEDA SPOT HOOD REFL KIT LFL

Manufacturer Information

Brand	RAB Lighting Inc
	Rab Lighting
GTIN	00019813032474
Manufacturers Part Number	LSLFLEDA
UPC	885360

Taxonomies, Classifications, and Categories

Category Description	LED FLOODLIGHTS, WALLPACKS, BOLLARDS & LANDSCAPE LIGHTING
Type	ACCESSORY FLOOD

Packaging

Carton	1
Weight Per Each	0.2625 (lbs/each)

LSLFLEDA



Accessorize your LFLED with a NEMA Type: 3H x 3V or 3H x 2V spot lens.

Color: Bronze

Weight: 0.3 lbs

Project:	Type:
Prepared By:	Date:

Driver Info

Type	Constant Current
120V	N/A
208V	N/A
240V	N/A
277V	N/A
Input Watts	N/A

LED Info

Watts	0W
Color Temp	N/A
Color Accuracy	N/A
L70 Lifespan	N/A Hours
Lumens	N/A
Efficacy	N/A

Technical Specifications

Compliance

UL Listed:

Suitable for wet locations. Suitable for ground mounting.

Construction

Lens:

Microprismatic diffusion lens for smooth and even light distribution

Housing:

Precision die-cast aluminum

Finish:

Formulated for high durability and long-lasting color

Optical

NEMA Type:

Fixture has a NEMA Type 3H x 3V

Other

Compatibility:

Compatible with LFLED5B.

Patents:

The design of the LSFLED is protected by patents pending in US, Canada, China, Taiwan and Mexico

Buy American Act Compliance:

RAB values USA manufacturing! Upon request, RAB may be able to manufacture this product to be compliant with the Buy American Act (BAA). Please contact customer service to request a quote for the product to be made BAA compliant.

Copyright © 2021 RAB Lighting All Rights Reserved Note: Specifications are subject to change at any time without notice

Dimensions

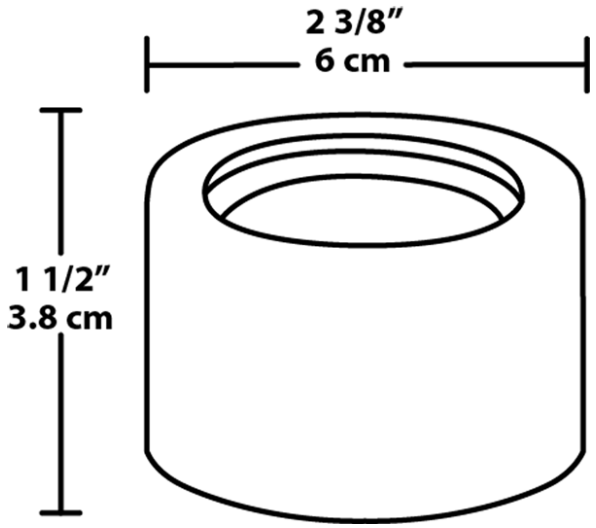

Features

- Microprismatic diffusion lens for smooth and even light distribution
- Precision die-cast aluminum housing
- 5-Year, No-Compromise Warranty

Copyright © 2021 RAB Lighting All Rights Reserved Note: Specifications are subject to change at any time without notice