ELLIOTT ELECTRIC SUPPLY
We Deliver...Lower Cost, Quality Products, & Personal Service
2310 N. Stallings Dr.
Nacogdoches, TX 75964-0
Phone: 9365697941
Fax: 9365604685



LS300W 300W 120V LUMIN 110 SENSOR WHITE

RAB LIGHTING

Catalog Number	LS300W
Manufacturer	RAB LIGHTING
Description	Luminator 110 Sensor, White, 110 ° Coverage, 120 V, 2.5 A, Motion Sensor, Adjustment, 8 sec to 10 min Time Delay, Wall Mount, 0.6 lb/EA
Weight per unit	0.6000 (lbs/each)
Product Category	Lighting Sensors

Features

Wattage	300

Descriptions

Description	300W 120V LUMIN 110 SENSOR WHITE
Long Description	Outdoor Sensors Luminator 110 Sensor 300W 120V White
Product Type	Luminator 110 Senr 300W 120V WH
Special Features	NONFIXTURE
Extra Long Description	RAB LS300W LUMINATOR 110 SENR 300W

Manufacturer Information

Brand	RAB Lighting Inc
GTIN	00019813730028
UPC	885360

Taxonomies, Classifications, and Categories

Category Description	Commercial dimmers, motion sensors, & photo cells
Type	SENSOR

Packaging

Carton	1
Package	12
Weight	0.7
Weight Per Each	0.6000 (lbs/each)

Uses, Certifications, and Standards

Application	Outdoor
Mounting	CEILING

LS300W



Luminator sensor with 110° view, manual override, 300 Watt switching capacity and auto test logic.

Color: White

Weight: 0.6 lbs

Project:	Type:
Prepared By:	Date:

Technical Specifications

Compliance

UL Listed:
Suitable for wet locations

Electrical

Voltage:
120V AC 60Hz

Power Consumption:
1W

Wall Switch Manual Override:
Two flip logic prevents activation by momentary power outages. Override resets to auto after 6 hours or at dawn. No extra wiring needed.

Surge Protection:
Withstands up to 3000 volts

Switching Capacity:
300W incandescent @ 120 volts, 2.5 amps.

Sensor Specifications

Time Adjustment:
8 seconds to 10 minutes

Photo Control:
Deactivates lights during daylight. Fully adjustable for 24 hour operation or custom applications.

Detector Sensitivity:
Adjustable from 100% to 50%

Auto Test Logic:
5 minutes of test time when powered. Resets to auto mode without adjustment.

Sensor Housing:
Made of tough, corrosion resistant polycarbonate

Detection:
110° view

Construction

Floodlights:
Made of tough, corrosion-resistant polycarbonate. Accepts PAR-38 lamps, medium base, 150W max. Lamps not included.

Other

Warranty:
3-year sensor warranty

Buy American Act Compliance:
RAB values USA manufacturing! Upon request, RAB may be able to manufacture this product to be compliant with the Buy American Act (BAA). Please contact customer service to request a quote for the product to be made BAA compliant.

Copyright © 2024 RAB Lighting All Rights Reserved Note: Specifications are subject to change at any time without notice

Dimensions

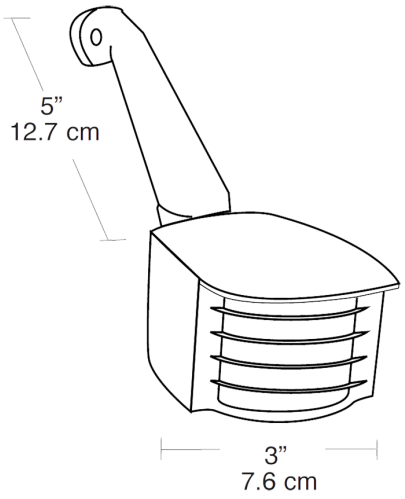

Features

- 300 Watt switching capacity
- Manual override
- Fully adjustable positioning
- 110° double look down lens
- Tough, vandal resistant lens and grill
- LS300 fits 1/2" standard threaded cover plates
- 3-Year Warranty

Copyright © 2024 RAB Lighting All Rights Reserved Note: Specifications are subject to change at any time without notice