ELLIOTT ELECTRIC SUPPLY

We Deliver...Lower Cost, Quality Products, & Personal Service

2310 N. Stallings Dr.
Nacogdoches, TX 75964-0
Phone: 9365697941
Fax: 9365604685



LFP38W 150W FLOOD PAR38/PAR20 MAX WHITE

RAB LIGHTING

Catalog Number	LFP38W
Manufacturer	RAB LIGHTING
Description	LANDSCAPE FLOOD 150W PAR38 OR PAR20 MAX WHITE
Weight per unit	0.7500 (lbs/each)
Product Category	Incandescent Floodlights

Descriptions

Description	150W FLOOD PAR38/PAR20 MAX WHITE
Long Description	LANDSCAPE FLOOD 150W PAR38 OR PAR20 MAX WHITE
Product Type	Flood 150W PAR38 or PAR20 Max White
Extra Long Description	RAB LFP38W FLOOD 150W PAR38 OR PAR2

Manufacturer Information

Brand	RAB Lighting Inc
	Rab Lighting
GTIN	00019813102535
Manufacturers Part Number	LFP38W
UPC	885360

Taxonomies, Classifications, and Categories

Category Description	Incandescent (Except Residential)

Packaging

Carton	1
Package	12
Weight Per Each	0.7500 (lbs/each)

LFP38W



Premium PAR38 Flood with large, molded high temperature black silicone gasket that totally seals lamp. Die cast aluminum housing. EZ Locknut. Suitable for mounting within 4' of the ground. PAR38 or PAR20, 150 Watt max. Lamp not supplied.

Color: White

Weight: 0.8 lbs

Project:	Type:
Prepared By:	Date:

Lamp Info

Type	PAR20
Watts	150W
Shape/Size	N/A
Base	N/A
ANSI	N/A
Hours	2,500
Lamp Lumens	N/A
Efficacy	N/A

Ballast Info

Type	N/A
120V	N/A
208V	N/A
240V	N/A
277V	N/A
Input Watts	N/A

Technical Specifications

Compliance

UL Listed:
Suitable for wet locations

Electrical

Sockets:
Porcelain with all copper current carrying components and spring loaded center contact

Construction

Swivels:
Fully adjustable with sure-grip locknuts. 1/2" NPS threaded arm with locking swivel fits all standard mounting covers.

Housings:
Precision die-cast aluminum. Tuffy flood is molded plastic.

Optical

Lamp:
PAR38 or PAR20, 150 watt max. lamp not supplied.

Other

Buy American Act Compliance:
RAB values USA manufacturing! Upon request, RAB may be able to manufacture this product to be compliant with the Buy American Act (BAA). Please contact customer service to request a quote for the product to be made BAA compliant.

Copyright © 2024 RAB Lighting All Rights Reserved Note: Specifications are subject to change at any time without notice

Dimensions

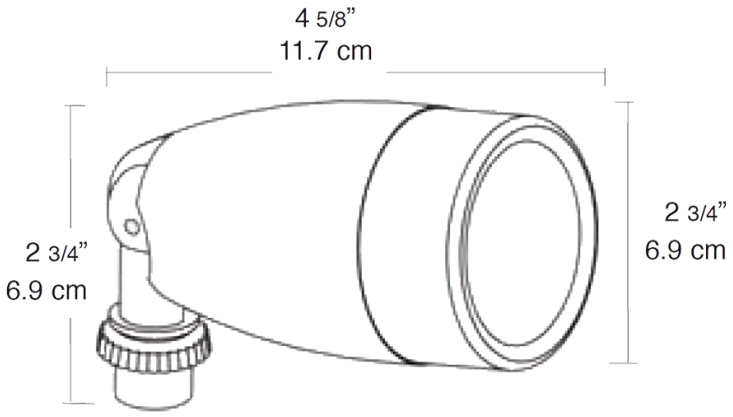

Features

- Molded, high temperature silicone gasket
- EZ Grip locknut matches fixture finish and can be adjusted with fingers, pliers or a screwdriver
- Rugged heavy sand die cast aluminum housing with durable powder coating
- Sockets have all copper current carrying components
- Fully adjustable swivel with sure-grip locks
- Mounting arms have 1/2" threads

Copyright © 2024 RAB Lighting All Rights Reserved Note: Specifications are subject to change at any time without notice