ELLIOTT ELECTRIC SUPPLY
We Deliver...Lower Cost, Quality Products, & Personal Service
2310 N. Stallings Dr.
Nacogdoches, TX 75964-0
Phone: 9365697941
Fax: 9365604685



LFP16A 60W LOW VOLT BRONZE FLOOD

RAB LIGHTING

Catalog Number	LFP16A
Manufacturer	RAB LIGHTING
Description	Landscape 650 Lumens Flood Sleek 16 Par16 60W Max Bronze
Weight per unit	0.8800 (lbs/each)
Product Category	Incandescent Floodlights

Material, Color, and Finish

Color	Bronze

Descriptions

Description	60W LOW VOLT BRONZE FLOOD
Long Description	Landscape 650 Lumens Flood Sleek 16 Par16 60W Max Bronze
Product Type	Flood Sleek 16 PAR16 60W Max Bronze
Extra Long Description	RAB LFP16A FLOOD SLEEK 16 PAR16 60W

Manufacturer Information

Brand	RAB Lighting Inc
	Rab Lighting
GTIN	00019813102429
Manufacturers Part Number	LFP16A
UPC	885360

Taxonomies, Classifications, and Categories

Category Description	Incandescent (Except Residential)
Type	ACCESSORY LANDSCAPE

Packaging

Carton	1
Package	12
Weight Per Each	0.8800 (lbs/each)

Uses, Certifications, and Standards

Application	Outdoor

LFP16A



PAR16 floodlight with die cast aluminum housing, integral glare shield and tempered lens. Sleek good looks with minimal size. Supplied with 6" leads and ground wire. Medium base PAR16 lamp, 60 Watt max. Lamp not supplied.

Color: Bronze

Weight: 0.9 lbs

Project:	Type:
Prepared By:	Date:

Lamp Info

Type	PAR16
Watts	60W
Shape/Size	N/A
Base	N/A
ANSI	N/A
Hours	2,000
Lamp Lumens	650 lm
Efficacy	N/A

Ballast Info

Type	N/A
120V	N/A
208V	N/A
240V	N/A
277V	N/A
Input Watts	N/A

Technical Specifications

Compliance

UL Listed:
Suitable for wet locations. Suitable for mounting within 4ft (1.2m) of the ground.

Construction

Swivels:
1/2" NPS threaded arm with serrated locking swivel fits all standard mounting boxes. EZ Grip locknuts color matched to fixture.

Housings:
Precision die-cast aluminum

Compatibility:
Fixture is compatible with GE and Sylvania Par16 lamps. Not compatible with Philips Par16 lamp.

Electrical

Voltage:
120V

Sockets:
Medium base porcelain with all copper current carrying components and spring loaded center contact

Other

Buy American Act Compliance:
RAB values USA manufacturing! Upon request, RAB may be able to manufacture this product to be compliant with the Buy American Act (BAA). Please contact customer service to request a quote for the product to be made BAA compliant.

Copyright © 2024 RAB Lighting All Rights Reserved Note: Specifications are subject to change at any time without notice

Dimensions

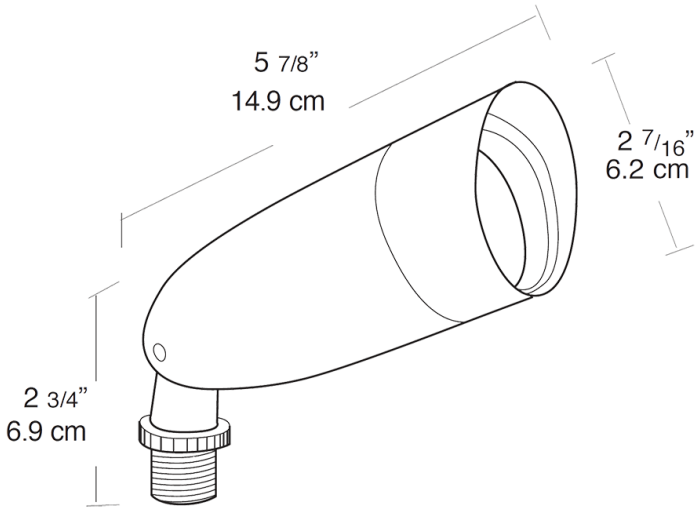

Features

- Rugged die cast aluminum housing with polyester powder coat finish
- Deep Glare Shield
- weatherproof lens and gasket
- "O" Ring seal for full weather protection
- No-rust brass & stainless steel external hardware
- Rugged mounting arm has 1/2" threads and pivots 180
- EZ Grip locknuts are color matched to fixture and can be tightened with fingers, pliers or screwdriver

Copyright © 2024 RAB Lighting All Rights Reserved Note: Specifications are subject to change at any time without notice