ELLIOTT ELECTRIC SUPPLY
We Deliver...Lower Cost, Quality Products, & Personal Service
2310 N. Stallings Dr.
Nacogdoches, TX 75964-0
Phone: 9365697941
Fax: 9365604685

LF34S 8W LED BULLET FLOOD 27K/3K/35K/4K/5K KNKL - BRONZE

RAB LIGHTING

Catalog Number	LF34S
Manufacturer	RAB LIGHTING
Description	LANDSCAPE FIELD ADJUSTABLE SMALL 8W 120V, 2700/3000/3500/4000/5000K BRONZE
Weight per unit	0.5000 (lbs/each)
Product Category	Lighting

Features

Media	Yes

Descriptions

Description	8W LED BULLET FLOOD 27K/3K/35K/4K/5K KNKL - BRONZE
Long Description	LANDSCAPE FIELD ADJUSTABLE SMALL 8W 120V, 2700/3000/3500/4000/5000K BRONZE
Product Type	Small 8W 120V, 27/3/35/4/5K BZ
Extra Long Description	RAB LF34S SMALL 8W 120V, 27/3/35/4/

Manufacturer Information

Brand	Rab Lighting
	RAB Lighting Inc
GTIN	00192552042185
Manufacturers Part Number	LF34S
UPC	885360

Taxonomies, Classifications, and Categories

Category Description	LED FLOODLIGHTS, WALLPACKS, BOLLARDS & LANDSCAPE LIGHTING

Packaging

Carton	1
Weight Per Each	0.5000 (lbs/each)

LF34S



Color: Bronze

Weight: 0.5 lbs

Project:	Type:
Prepared By:	Date:

Driver Info

Type	Constant Current
120V	0.07A
208V	N/A
240V	N/A
277V	N/A
Input Watts	7.7-8W

LED Info

Watts	8W
Color Temp	2700K/3000K/3500K/4000K/5000K
Color Accuracy	81-84 CRI
L70 Lifespan	100,000 Hours
Lumens	955-1,043 lm
Efficacy	119.4-133.7 lm/W

Technical Specifications

Field Adjustability

Field Adjustable:
Field Adjustable Light Output:
Color temperature selectable by 2700K, 3000K, 3500K, 4000K and 5000K (default: 4000K)

Compliance

UL Listed:
Suitable for wet locations

IP Rating:
Ingress protection rating of IP65 for dust and water

IESNA LM-79 & LM-80 Testing:
RAB LED luminaires and LED components have been tested by an independent laboratory in accordance with IESNA LM-79 and LM-80.

LED Characteristics

LEDs:
Long-life, high-efficacy, discrete, surface-mount LEDs

Color Consistency:
7-step MacAdam Ellipse binning to achieve consistent fixture-to-fixture color

Color Uniformity:
RAB's range of Correlated Color Temperature follows the guidelines of the American National Standard for (SSL) Products, ANSI C78.377-2017.

Electrical

Driver:
Constant Current, Class 2, 120V, 50/60 Hz, 120V: 0.07A

THD:
13.41% at 120V

Power Factor:
97.1% at 120V

Dimmable:
Yes, 120V with TRIAC dimmer

Dim to Off:
Yes

Aux Power Supply:
No

Surge Protection:
2.5kV

Performance

Lifespan:
100,000-Hour LED lifespan based on IES LM-80 results and TM-21 calculations

Construction

Cold Weather Starting:
The minimum starting temperature is -40°C (-40°F)

Maximum Ambient Temperature:
Suitable for use in up to 40°C (104°F)

Housing:
Die-cast aluminum

Tilt Increment:
Rotates in 2 degree increments

Lens:
Tempered glass

Gaskets:
High-temperature silicone

Finish:
Formulated for high durability and long-lasting color

Green Technology:
Mercury and UV free. RoHS-compliant components.

Copyright © 2024 RAB Lighting All Rights Reserved Note: Specifications are subject to change at any time without notice

Technical Specifications (continued)

Installation

Mounting:
Knuckle mount

Other

5 Yr Limited Warranty:
The RAB 5-year, limited warranty covers light output, driver performance and paint finish. RAB's warranty is subject to all terms and conditions found at rablighting.com/warranty.

Buy American Act Compliance:
RAB values USA manufacturing! Upon request, RAB may be able to manufacture this product to be compliant with the Buy American Act (BAA). Please contact customer service to request a quote for the product to be made BAA compliant.

Dimensions

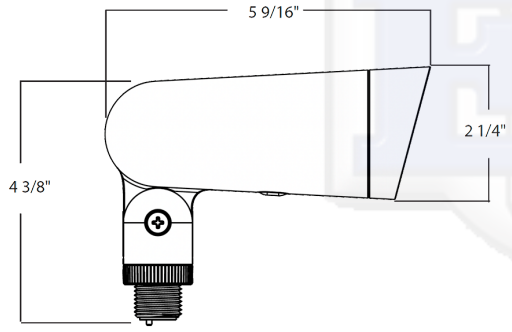

Features

- 100,000-hour LED Life
- TRIAC dimming
- IP65 rating protects against dust and water
- 5-Year, limited warranty

Ordering Matrix

Family	Size/Wattage	Mounting	Color Temp	Finish	Driver
LF34	S				
	S = Small, 8W **L =** Large, 33W	**Blank =** Knuckle Arm	**Blank =** 2700/3000/3500/4000/5000K CCT Adjustable	**Blank =** Bronze **B =** Black **W =** White	**Blank =** 120V, TRIAC

Copyright © 2024 RAB Lighting All Rights Reserved Note: Specifications are subject to change at any time without notice