ELLIOTT ELECTRIC SUPPLY
We Deliver...Lower Cost, Quality Products, & Personal Service
2310 N. Stallings Dr.
Nacogdoches, TX 75964-0
Phone: 9365697941
Fax: 9365604685



LES13 13W LED BLT FLD 50K BRZ

RAB LIGHTING

Catalog Number	LES13
Manufacturer	RAB LIGHTING
Description	Floodlights 1169 Lumens Les 13W 5000K Bronze
Weight per unit	1.3 (lbs/each)
Product Category	Led Floodlights

Features

Voltage Rating	120
Wattage	13
Lumens	1169

Descriptions

Description	13W LED BLT FLD 50K BRZ
Long Description	Floodlights 1169 Lumens Les 13W 5000K Bronze
Product Type	Leslieflood 13W 120V 5K 80CRI BZ
Extra Long Description	RAB LES13 LESLIEFLOOD 13W 120V 5K 8

Manufacturer Information

Brand	RAB Lighting Inc
	Rab Lighting
GTIN	00019813497235
Manufacturers Part Number	LES13
UPC	885360

Taxonomies, Classifications, and Categories

Category Description	LED FLOODLIGHTS, WALLPACKS, BOLLARDS & LANDSCAPE LIGHTING
Type	FLOODLIGHT

Packaging

Carton	1
Package	12
Weight Per Each	1.3 (lbs/each)

Uses, Certifications, and Standards

Application	Outdoor
Mounting	CEILING

LES13



Economical low-profile 13W LED floodlight delivers a wide 6H X 6V beam distribution and replaces 75 Watt halogen BR30.

Color: Bronze

Weight: 1.3 lbs

Project:	Type:
Prepared By:	Date:

Driver Info

Type	Constant Current
120V	0.10A
208V	N/A
240V	N/A
277V	N/A
Input Watts	10.9W

LED Info

Watts	13W
Color Temp	5000K (Cool)
Color Accuracy	84 CRI
L70 Lifespan	60,000 Hours
Lumens	1,358 lm
Efficacy	124.6 lm/W

Technical Specifications

Compliance

UL Listed:
Suitable for wet locations. Suitable for mounting within 4 ft of the ground.

IP Rating:
Ingress protection rating of IP66 for dust and water

IESNA LM-79 & LM-80 Testing:
RAB LED luminaires and LED components have been tested by an independent laboratory in accordance with IESNA LM-79 and LM-80.

DLC Listed:
This product is on the Design Lights Consortium (DLC) Qualified Products List and is eligible for rebates from DLC Member Utilities. Designed to meet DLC 5.1 requirements.
DLC Product Code: P31LQDM8

Optical

NEMA Type:
6H x 6V Beam Spread

Construction

Cold Weather Starting:
The minimum starting temperature is -40°C (-40°F)

Maximum Ambient Temperature:
Suitable for use in up to 40°C (104°F)

Housing:
Precision die-cast aluminum housing, lens frame and mounting arm

Reflector:
Vacuum-metalized polycarbonate

Lens:
Diffused glass for smooth, even light distribution

Mounting:
Heavy-duty mounting arm with "O" ring seal, wire seal plug & stainless steel screw

Gaskets:
High-temperature silicone gaskets

Finish:
Our environmentally friendly polyester powder coatings are formulated for high-durability and long-lasting color

Green Technology:
Mercury and UV free. RoHS-compliant components.

Other

Note:
All values are typical (tolerance +/- 10%)

5 Yr Limited Warranty:
The RAB 5-year, limited warranty covers light output, driver performance and paint finish. RAB's warranty is subject to all terms and conditions found at rablighting.com/warranty.

Buy American Act Compliance:
RAB values USA manufacturing! Upon request, RAB may be able to manufacture this product to be compliant with the Buy American Act (BAA). Please contact customer service to request a quote for the product to be made BAA compliant.

LED Characteristics

LEDs:
Long-life, high-efficacy, surface-mount LEDs

Color Uniformity:
RAB's range of Correlated Color Temperature follows the guidelines of the American National Standard for Specifications for the Chromaticity of Solid State Lighting (SSL) Products, ANSI C78.377-2017.

Performance

Wattage Equivalency:
75W PAR30

Electrical

Driver:
120V driver, 50/60/ Hz, 120V: 0.10A

Copyright © 2024 RAB Lighting All Rights Reserved Note: Specifications are subject to change at any time without notice

Technical Specifications (continued)

THD:
10.9% at 120V

Power Factor:
99% at 120V

Dimensions

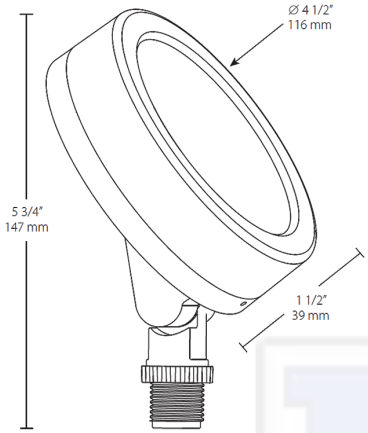

Features

- Equivalent to 75W halogen BR30 wide flood
- Wide 6H x 6V distribution
- Diffused lens for smooth, even light distribution
- |Very low profile
- Adjustable knuckle
- 60,000-Hour LED lifespan

Ordering Matrix

Family	Wattage	Color Temp	Finish
LES	13		
	13 = 13W	**Blank =** 5000K Cool **N =** 4000K Neutral **Y =** 3000K Warm	**Blank =** Bronze **B =** Black [1] **VG =** Verde Green [1] **W =** White

[1] *Not available with sensor.*

Copyright © 2024 RAB Lighting All Rights Reserved Note: Specifications are subject to change at any time without notice