ELLIOTT ELECTRIC SUPPLY
We Deliver...Lower Cost, Quality Products, & Personal Service
2310 N. Stallings Dr.
Nacogdoches, TX 75964-0
Phone: 9365697941
Fax: 9365604685



LB212 2-1/2" PVC TYPE LB CONDULET

CANTEX,INC

Catalog Number	LB212
Manufacturer	CANTEX,INC
Description	CANTEX 5133669 is a 2-1/2 in. Conduit Body Type LB which provides pull, splice, and tap access for conductors in a conduit system along with a change in direction
Weight per unit	3.8 (lbs/each)
Product Category	PVC Conduit Fittings & Accy

Dimensions and Weight

Size	2 1/2

Descriptions

Description	2-1/2" PVC TYPE LB CONDULET
Features	CANTEX 5133669 is a 2-1/2 in. Conduit Body Type LB which provides pull, splice, and tap access for conductors in a conduit system along with a change in direction
Long Description	CANTEX 5133669 is a 2-1/2 in. Conduit Body Type LB which provides pull, splice, and tap access for conductors in a conduit system along with a change in direction
Product Type	2 1/2 Ul-LB Access FTG
Extra Long Description	CTX 5133669 2 1/2 UL-LB ACCESS FTG

Manufacturer Information

Brand	PVC & Accessories
	CANTEX INC.
GTIN	00088700065475
Manufacturers Part Number	5133669
UPC	881780

Taxonomies, Classifications, and Categories

Category Description	PVC CONDULETS
Type	2-1/2 in. Conduit Body Type LB

Trade Size

Trade Size	2 1/2

Packaging

Carton	1
Weight Per Each	3.8 (lbs/each)

Uses, Certifications, and Standards

Standard	UL Listed;UL, Made in USA

Conduit Bodies

CANTEX

Conduit Bodies - Type LB

1/2" THROUGH 2"



Conduit Body Type LB provides pull, splice, and tap access for conductors in a conduit system along with a change in direction. Type LB Conduit Bodies are used to make a 90-degree turn in a conduit run with one opening on top and one opening exiting from the back opposite the cover.

- Durable non-conductive PVC will not rust or corrode
- For use with Schedule 40 & 80 conduit
- Includes lid, gasket, and screws
- UL listed
- Made in USA

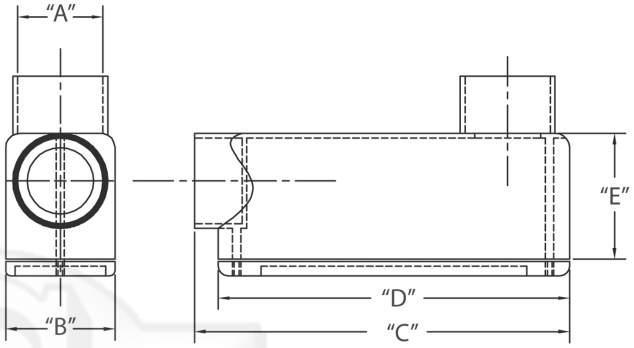

2-1/2" THROUGH 4"



Part Number	Trade Size	Carton Quantity	"A"	"B"	"C"	"D'	"E"	Volume Cu. In.	3-Wire Fill
5133663	1/2	25	.875	1.313	4.188	4.000	1.438	4.3	#6 or smaller
5133664	3/4	15	1.063	1.500	4.938	4.625	1.625	6.5	#6 or smaller
5133665	1	10	1.313	1.750	5.875	5.375	2.000	11.8	#6 or smaller
5133666	1-1/4	10	1.688	2.500	7.563	7.188	2.375	25.0	XHHW #1
5133667	1-1/2	10	1.875	2.625	8.563	8.000	2.750	36.5	XHHW #2/0
5133668	2	5	2.375	3.125	9.813	9.563	3.375	63.5	XHHW #4/0
5133669	2-1/2	5	2.875	4.625	15.000	12.875	4.563	198.0	XHHW 500 MCM
5133670	3	5	3.643	4.625	15.125	12.875	4.563	198.0	XHHW 500 MCM
5133671	3-1/2	4	4.000	5.625	16.188	12.875	5.500	305.0	XHHW 500 MCM
5133672	4	4	4.000	5.625	16.188	12.875	5.500	305.0	XHHW 500 MCM

Dimensions are nomina



SINGLE SOURCE FOR PVC ELECTRICAL

CANTEX offers a complete line of PVC Conduit Bodies as part of a full line PVC electrical products. The CANTEX Conduit Body line includes multiple sizes of Type LB, Type LL, Type LR, Type T, Type C, and Type E Conduit Bodies.

With several decades of experience manufacturing PVC conduit, fittings and accessories, you can trust CANTEX to provide quality products. To see our complete line of PVC Conduit Bodies or our full line of PVC electrical products visit www.cantexinc.com.