ELLIOTT ELECTRIC SUPPLY

We Deliver...Lower Cost, Quality Products, & Personal Service

2310 N. Stallings Dr.
Nacogdoches, TX 75964-0
Phone: 9365697941
Fax: 9365604685



KTDDSLEDT884L 4L 8' NON-BALLASTED STRIP

KEYSTONE TECHNOLOGIES

Catalog Number	KTDDSLEDT884L
Manufacturer	KEYSTONE TECHNOLOGIES
Description	LED Tube Strip Fixture, White, Steel, 22 W, Non Dimmable, 8 ft Length, 4.28 in Width, 5 yr Warranty, 10 lb
Weight per unit	10.0 (lbs/each)
Product Category	Led Highbay Lighting

Features

Ballast Type	N/A
Circuit Type	N/A
Input Voltage	N/A
Lamp Type	T8
Nominal Length	N/A
Nominal Size	8 ft Linear
Number Of Lamps	4
Output Current	N/A
Output Voltage	N/A
Sensor Type	N/A
Wattage	N/A
Wire Type	N/A
Ip Rating	N/A

Material, Color, and Finish

Base Type	G13
Color Rendering Index (Cri)	N/A
Housing Color	White

Descriptions

Description	4L 8' NON-BALLASTED STRIP
Long Description	Key KT-DDSLEDT8-8-4L-DP 8 4 lamp Co
Product Type	8 4 Lamp Complete Strip Fixture, Wired For Type B T8 Led Tub

Manufacturer Information

Brand	Keystone
GTIN	00890949003824
Manufacturers Part Number	KT-DDSLEDT8-8-4L-DP
UPC	891916

Taxonomies, Classifications, and Categories

Category Description	LED ARCHITECTURAL & SPECIFICATION LIGHTING

ELLIOTT ELECTRIC SUPPLY
We Deliver...Lower Cost, Quality Products, & Personal Service
2310 N. Stallings Dr.
Nacogdoches, TX 75964-0
Phone: 9365697941
Fax: 9365604685

Availability

Manufacturer Status	Inactive

Packaging

Carton	1
Weight Per Each	10.0 (lbs/each)

Uses, Certifications, and Standards

Energy Star	N

KT-DDSLEDT8-8-4L

8', 4-LAMP STRIP FIXTURE

DESCRIPTION

8' LED tube ready strip fixture, 4 lamp. (lamps sold separately)

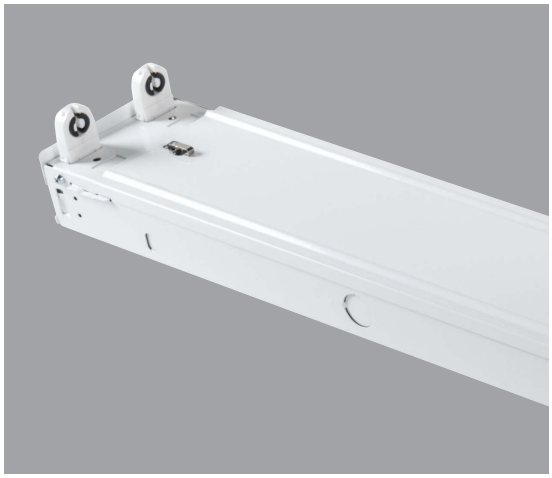

APPLICATION

Used for indoor highbay, lowbay, warehouse and general lighting applications.

PRODUCT FEATURES

- Designed for use with single ended wiring (type B) LED T8 tubes; includes Pre-Wired Sockets
- Post painted white steel body
- Rated for dry and damp locations
- Designed only for use with Keystone single ended wiring DirectDrive LED lamps: 25W max per lamp

PRODUCT DIMENSIONS

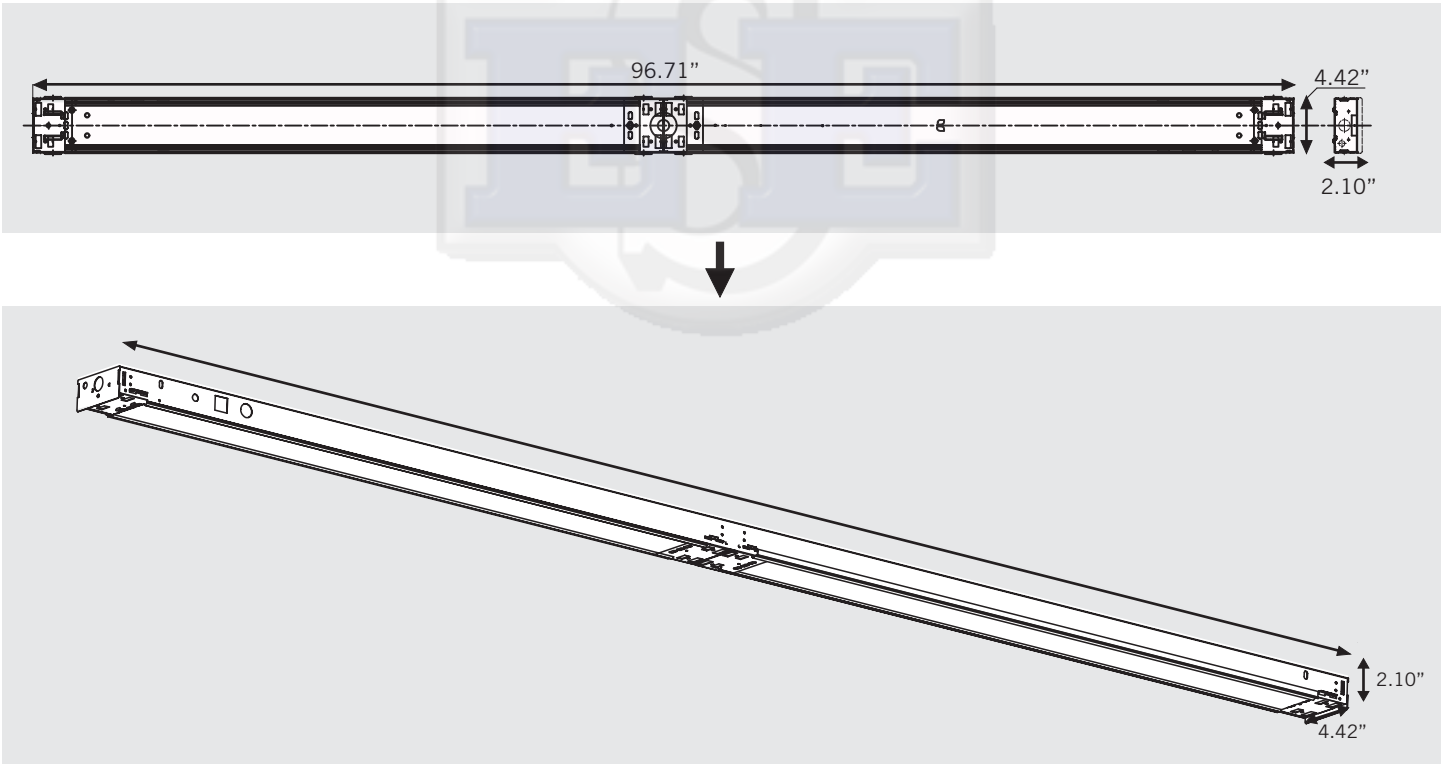

Note: In order for UL safety certification to be valid, only Keystone lamps may be installed in the fixture as per product label.

SINCE 1945
KEYSTONE
LIGHT MADE EASY®

KT-DDSLEDT8-8-4L
8', 4-LAMP STRIP FIXTURE

ORDERING INFORMATION

ORDER CODE	PACK QTY.	EASY CODE	UPC
KT-DDSLEDT8-8-4L	1	LMY-52	89094900382

CATALOG NUMBER BREAKDOWN

KT-DDSLEDT8-8-4L
1 2 3 4 5 6 7

1 **Keystone Technologies**
2 **Direct Drive**
3 **Strip Fixture**
4 **LED Lamp**
5 **T8 Tubes**
6 **8' Nominal Size**
7 **4 Lamps**