ELLIOTT ELECTRIC SUPPLY

We Deliver...Lower Cost, Quality Products, & Personal Service

2310 N. Stallings Dr.
Nacogdoches, TX 75964-0
Phone: 9365697941
Fax: 9365604685



HSLED13A *DISCONTINUED* 13W LED FLD/SPOT 51K BRZ

RAB LIGHTING

Catalog Number	HSLED13A
Manufacturer	RAB LIGHTING
Description	Landscape 1640 Lumens Spot Bullet 13W 5000K Bronze
Weight per unit	4.9 (lbs/each)
Product Category	Led Floodlights

Features

Voltage Rating	120/277
Wattage	13
Lumens	1502
Media	Yes

Descriptions

Description	*DISCONTINUED* 13W LED FLD/SPOT 51K BRZ
Long Description	Landscape 1640 Lumens Spot Bullet 13W 5000K Bronze
Product Type	Lflood 13W Cool Spot Bullet W/ Hood BZ
Special Features	LED
Extra Long Description	RAB HSLED13A LFLOOD 13W COOL SPOT B

Manufacturer Information

Brand	RAB Lighting Inc
	Rab Lighting
GTIN	00019813331270
Manufacturers Part Number	HSLED13A
UPC	885360

Taxonomies, Classifications, and Categories

Category Description	LED FLOODLIGHTS, WALLPACKS, BOLLARDS & LANDSCAPE LIGHTING
Type	FLOODLIGHT

Packaging

Carton	1
Weight Per Each	4.9 (lbs/each)

Uses, Certifications, and Standards

Application	Outdoor
Mounting	CEILING

HSLED13A



Bullet shape die cast aluminum flood with spotlighting for over 40 feet away.

Color: Bronze

Weight: 3.5 lbs

Project:	**Type:**
Prepared By:	**Date:**

Driver Info

Type	Constant Current
120V	0.12A
208V	0.07A
240V	0.06A
277V	0.06A
Input Watts	13.5W

LED Info

Watts	13W
Color Temp	5100K (Cool)
Color Accuracy	71 CRI
L70 Lifespan	100,000 Hours
Lumens	1,640 lm
Efficacy	121.5 lm/W

Technical Specifications

Compliance

UL Listed:
Suitable for wet locations. Suitable for ground mounting.

IESNA LM-79 & LM-80 Testing:
RAB LED luminaires and LED components have been tested by an independent laboratory in accordance with IESNA LM-79 and LM-80.

DLC Listed:
This product is on the Design Lights Consortium (DLC) Qualified Products List and is eligible for rebates from DLC Member Utilities. Designed to meet DLC 5.1 requirements.
DLC Product Code: PSEHVPID

Performance

Lifespan:
100,000-Hour LED lifespan based on IES LM-80 results and TM-21 calculations

Optical

Spotlight Distribution:
Beam Angle of 11° and Field Angle of 24° enables the HSLED to produce a very narrow spot distribution

NEMA Type:
NEMA Beam Spread of 4H x 4V

LED Characteristics

LEDs:
13 Watt high output, long-life LED

Lumen Maintenance:
100,000 hours Life Based onIm-80 Tests

Color Consistency:
7-step MacAdam Ellipse binning to achieve consistent fixture-to-fixture color

Color Stability:
LED color temperature is warrantied to shift no more than 200K in color temperature over a 5-year period

Color Uniformity:
RAB's range of Correlated Color Temperature follows the guidelines of the American National Standard for (SSL) Products, ANSI C78.377-2017.

Electrical

Driver:
Constant Current, 120-277V with 4kV surge protection, 120V: 0.12A, 208V: 0.07A, 240V: 0.06A, 277V: 0.06A

THD:
10.11% at 120V, 10.95% at 277V

Power Factor:
99% at 120V, 91.7% at 277V

Surge Protection:
4kV

Construction

Ambient Temperature:
Suitable for use in up to 40°C (104°F)

Cold Weather Starting:
The minimum starting temperature is -40°C (-40°F)

Thermal Management:
Cast aluminum Thermal Management system for optimal heat sinking. The HSLED is designed for cool operation, most efficient output and maximum LED life by minimizing LED junction temperature.

Housing:
Precision die-cast aluminum housing, hood and mounting arm

Gaskets:
High-temperature Silicone

Finish:
Formulated for high durability and long-lasting color

Copyright © 2024 RAB Lighting All Rights Reserved Note: Specifications are subject to change at any time without notice

Technical Specifications (continued)

Green Technology:
Mercury and UV free. RoHS-compliant components.

Other

Warranty:
RAB warrants that our LED products will be free from defects in materials and workmanship for a period of five (5) years from the date of delivery to the end user, including coverage of light output, color stability, driver performance and fixture finish. RAB's warranty is subject to all terms and conditions found at rablighting.com/warranty.

Patents:
The design of the HSLED is protected by Taiwan Patent 01510965 and patents pending in US, Canada, China, and Mexico

Buy American Act Compliance:
RAB values USA manufacturing! Upon request, RAB may be able to manufacture this product to be compliant with the Buy American Act (BAA). Please contact customer service to request a quote for the product to be made BAA compliant.

Dimensions

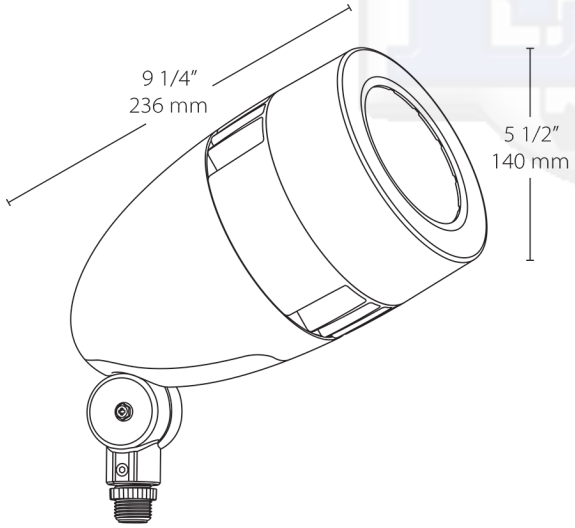

Features

- Spot lighting for over 40 feet away
- Perfect for flag lighting
- NEMA type - 4H x 4V
- Available in four colors
- 100,000-hour life based on LM-80 results and TM-21 calculations
- 5-Year, No-Compromise Warranty

Copyright © 2024 RAB Lighting All Rights Reserved Note: Specifications are subject to change at any time without notice

Ordering Matrix

Family	Wattage	Color Temp	Finish	Driver Options	Other Options
HSLED	13		A		
	18 = 18W **13 =** 13W **26 =** 26W	**N =** 4000K Neutral **Y =** 3000K Warm **Blank =** 5000K Cool	**W =** White **Blank =** Bronze **B =** Black **VG =** Verde Green **A =** Bronze	**Blank =** Standard **/D10 =** 0-10V Dimming **/480 =** 480V (Only available for 26W)	**Blank =** Standard **USA =** BAA Compliant

Copyright © 2024 RAB Lighting All Rights Reserved Note: Specifications are subject to change at any time without notice