Project		Catalog #		Type	
Prepared by		Notes		Date	

HALO

HLCEMS 4" Surface Mount LED Disk Light with Integrated Motion Sensor

HLCE LED Disk Light now comes with an integrated Motion Sensor in 4” and 6” sizes. This product mounts directly to the ceiling or junction box and creates a stylish look. It comes with 5CCT selection to create a perfect ambience to match your style. HLCE MS delivers higher lumens and allows for lower installation cost by removing the switch from the circuit.[1]

Typical Applications Residential • Multifamily • Hospitality

Interactive Menu

- Order Information page 2
- Product Specifications page 4
- Photometric Data page 4
- Product Warranty
- Dimming Guide

Refer to ENERGY STAR® Certified Products List.
Can be used to comply with California Title 24 High Efficacy requirements.
Certified to California Appliance Efficiency Database under JA8.

Top Product Features

- 4” Surface Mount LED Disk Light (Round)
- Ultra-fast below-the-ceiling installation; no clips or plates needed.
- Installs in many 3-1/2" and 4" round standard and pancake junction boxes and recessed housings (See compatibility lists)
- **Color Temperature (CCT):** 5-color Field-SeleCCTable (2700K, 3000K, 3500K, 4000K, 5000K); 90+ CRI
- **Brightness (@3000K):** 1035 lumens
- **Dimming:** Dims to 10% (phase cut LE/TE) with compatible dimmers; 120V input
- Matte Black and Paintable Matte White Decorative Overlays (sold separately)
- Mounting hardware and E26 adapter included
- AIR-TITE, wet location-listed, IC-rated, and ENERGY STAR® certified
- 50,000 hrs of maintenance-free operation
- 5-year warranty

1. T24 and RoHS are self-tested by Cooper Lighting Solutions. Not a third party certification.

Order Information

Catalog Number	Module	Lumens (@3000K)	CRI/CCT	Driver	Finish	Packaging
HLCEMS410FS1E	4-inch LED Disk Light with Integrated Motion Sensor	1035 lm	90+ CRI, 5-color Field-SeleCCTable™ CCT: 2700/3000/3500/4000/5000K	10% Phase Cut LE/TE Dimming, 120V 60Hz	Matte White	Recyclable 4-color plastic-free packaging
HLCEMS410FS1E-CA	4-inch LED Disk Light Integrated Motion Sensor (California Version)[2]	1035 lm	90+ CRI, 5-color Field-SeleCCTable™ CCT: 2700/3000/3500/4000/5000K	10% Phase Cut LE/TE Dimming, 120V 60Hz	Matte White	Recyclable 4-color plastic-free packaging
HLCEMS410FS1E-6BP	4-inch LED Disk Light with Integrated Motion Sensor (6-pack)	1035 lm	90+ CRI, 5-color Field-SeleCCTable™ CCT: 2700/3000/3500/4000/5000K	10% Phase Cut LE/TE Dimming, 120V 60Hz	Matte White	6 Pack Recyclable 4-color plastic-free packaging

2. California versions do not include Recessed Housing Mounting Hardware (Retrofit Springs, E26 Edison Socket Adapter) for mounting to compatible housings.

Accessories (sold separately)

Accessories
Decorative Trim Overlays **HLCEMS4TRMMB** = 4" Round Decorative Overlay, Matte Black **HLCEMS4TRMWH** = 4" Round Decorative Overlay, Paintable Matte White

HLCEMS4TRMWH
Paintable Matte White

HLCEMS4TRMMB
Matte Black

Dimensional and Mounting Details

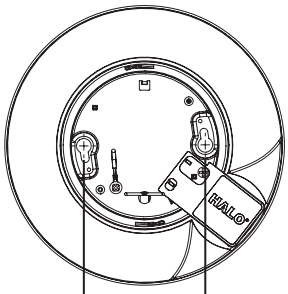

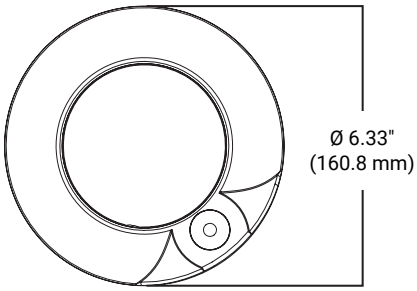

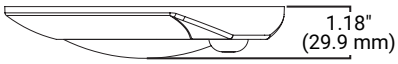

MOTION SENSOR

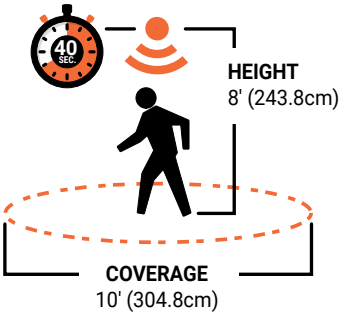

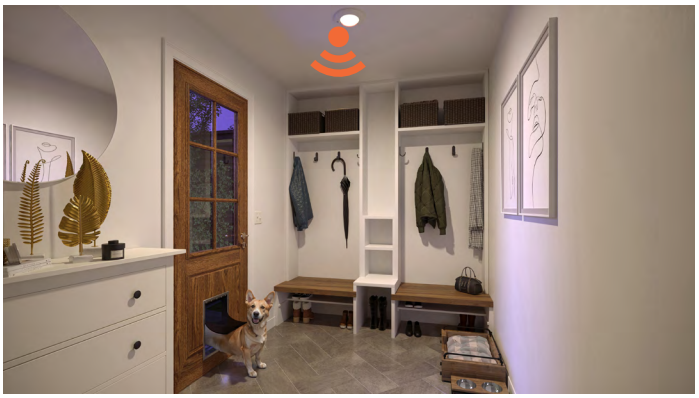

Compatible Junction Boxes [4]

Round
New Work Fixture Box (Plastic)
4" Diameter x 2-3/16"

Round
New Work Ceiling Box (Plastic)
3-1/2" Diameter x 2-3/4"

Round
Old Work Box (Plastic)
4-1/4" Diameter flange (3-1/2" I.D.) x 2-5/8"

Round
New Work Fixture Box (Plastic) w/Bar Hanger
4" x 2-3/16"

JB4FR2
4" NC JBox for Fire Rated Ceilings
4" diameter x 5-1/2"
(102mm x 140mm)

4. This is a representative list of compatible junction boxes only. Information contained in this literature about other manufacturers' products is from published information made available by the manufacturer and is deemed to be reliable, but has not been verified. Cooper Lighting Solutions makes no specific recommendation on product selection and there are no warranties of performance or compatibility implied. Installer must determine that site conditions are suitable to allow proper installation.

Compatible Housings

The non-California HLCE Series LED Disc Light is UL Certified for use with the following recessed housings.

HALO - 4" Housings

Standard Housings	E4ICATSB, E4TATSB, E4RTATSB
Junction Box Housings	JB4FR2

HALO - 5" Housings

Standard Housings	H5ICAT, H5RICAT, E5ICAT, E5RICAT
Shallow Housings	H25ICAT

Product Specifications

Fixture
- Twist-release polycarbonate lens
- Stamped aluminum fixture
- Integrated PIR Motion Sensor

LED Array
- Color Temperature: Field selectable color temperatures (CCT): 2700K, 3000K, 3500K, 4000K, 5000K
- Color Quality: 90+ CRI minimum
- Color Accuracy within 4 step on endpoints 6 in the middle provides excellent color quality and uniformity
- Factory default color temperature (CCT) is set to bright white (3000K)
- Backlit LED technology
- Expected Life: L70 at 50,000 hours projected in accordance with TM-21

Optical Assembly
- Precision engineered optic provides uniform luminance from a low-profile convex lens
- Removable lens for easy installation from below the ceiling.

Driver & Dimming
- Integral 120V 60Hz constant current driver provides noise-free, high-efficiency operation
- Dimmable: Continuous, flicker-free phase cut (leading-edge/trailing-edge - LE/TE) dimming from 100% to 10% output with compatible dimmers
- See this fixture's Dimming Guide for compatible dimmers
  - Tip: For optimal dimming performance, consider dimmers with low-end trim adjustment; note that some dimmers require a neutral wire in the box

Wiring
- Wire nuts provided for mains connections
- The included E26 medium screw-base Edison adapter provides easy retrofit of incandescent housings (non-California product only).
- Includes E26 medium socket adapter provides mains connections for recessed housing installations.
- Reference installation instructions for complete mounting steps

Electrical Junction Box Mounting
- HLCE fixtures may be used in compatible electrical junction boxes in direct contact with insulation including spray foam insulation
- Installs from below the ceiling
- Suitable for installation in most 3-1/2" and 4" octagon and round electrical junction boxes.
- Compatible with compact (pancake) junction boxes
- The installer must ensure compatibility of fit, wiring and proper mounting in the electrical junction box. This includes all applicable national and local electrical and building coded NEMA LSD 57-2013
- Reference installation instructions for complete mounting steps

Recessed Housing Mounting
- Extension Springs for 4" & 5" housings included in the box (Compatible with Halo 4" & 5" housings, refer list)
- Not for use in recessed housings in direct contact with spray foam insulation refer to NEMA LSD 57-2013
- The included wire nuts and E26 medium socket adapter provide easy mounting to recessed housings (non-California product only)
- Reference installation instructions for complete mounting steps

Compliance
- cULus certified for US and Canada
- Damp location listed
- Airtight per ASTM-E283 (no gasket necessary)
- Suitable for use in clothes closets when installed in accordance with the NEC 410.16 spacing requirements
- EMI/RFI emissions per FCC 47CFR Part 15 consumer limits
- Contains no mercury or lead and RoHS compliant[1]
- Photometric testing in accordance with IES LM-79-08
- Lumen maintenance projections in accordance with IES LM-80-08 and TM-21-11
- ENERGY STAR® certified, reference Certified Light Fixtures database
- Certified to State of California Title 20, State regulated LED Lamp; reference Modernized Appliance Efficiency Database System (MAEDBS) for State-regulate d LED Lamp
- Can be used for State of California Title 24 high efficacy LED compliance under JA8[1], reference Modernized Appliance Efficiency Database System (MAEDBS) for 2022 JA8 High Efficacy Lighting

Warranty
- Five year limited warranty, consult website for details. www.cooperlighting.com/warranty

1. T24 and RoHS are self-tested by Cooper Lighting Solutions. Not a third party certification.

Energy Data

HLCEMS410FS1E	
Lumens	1000 (nominal)
Input Voltage	120V
Input Current	0.112
Input Power	12.1W
Driver Efficiency	68%
Inrush(A)	3.4
THDi	45%
PF	>0.9
T Ambient	-30°C to +40°C
Sound Rating	<22dBA
Efficacy (LPW)	82 LPW

Catalog Number	CCT	Watts	lumens	LPW	CRI
HLCEMS410FS1E	2700K	12.2	1000	82.2	92
	3000K	12.2	1035	84.8	94
	3500K	12.2	1065	87.0	95
	4000K	12.2	1075	88.3	95
	5000K	12.2	1065	87.5	93

Photometric Data

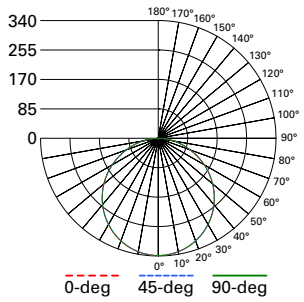

HLCEMS410FS1E-3000K

Spacing criterion:
(0-180) 1.26 | (90-270) 1.26 | (Diagonal) 1.38
Beam Angle (50%) 115°
Field Angle (10%) 170°
Lumens: 1035
Input Watts: 12.2 W
Efficacy: 84.8 LPW
UGR: 29
Test Report: P1057167

Zonal Lumen	Lumens	% Lumens
0-30	264	25.5
0-40	434	41.9
0-60	774	74.8
0-90	1021	98.6

CCT: Range of 2700K - 5000K

TM-30-15	Rf = 91
	Rg = 100
CRI/CIE	Ra = 94
	R9 = 67.5

Cooper Lighting Solutions
1121 Highway 74 South
Peachtree City, GA 30269
P: 770-486-4800
www.cooperlighting.com

© 2025 Cooper Lighting Solutions
All Rights Reserved.

Specifications and dimensions subject to change without notice.

Project		Catalog #		Type	
Prepared by		Notes		Date	

HALO

HLCEMS 4" Surface Mount LED Disk Light with Integrated Motion Sensor

HLCE LED Disk Light now comes with an integrated Motion Sensor in 4” and 6” sizes. This product mounts directly to the ceiling or junction box and creates a stylish look. It comes with 5CCT selection to create a perfect ambience to match your style. HLCE MS delivers higher lumens and allows for lower installation cost by removing the switch from the circuit.[1]

Typical Applications Residential • Multifamily • Hospitality

Interactive Menu

- Order Information page 2
- Product Specifications page 4
- Photometric Data page 4
- Product Warranty
- Dimming Guide

Refer to ENERGY STAR® Certified Products List.
Can be used to comply with California Title 24 High Efficacy requirements.
Certified to California Appliance Efficiency Database under JA8.

Top Product Features

- 4” Surface Mount LED Disk Light (Round)
- Ultra-fast below-the-ceiling installation; no clips or plates needed.
- Installs in many 3-1/2" and 4" round standard and pancake junction boxes and recessed housings (See compatibility lists)
- **Color Temperature (CCT):** 5-color Field-SeleCCTable (2700K, 3000K, 3500K, 4000K, 5000K); 90+ CRI
- **Brightness (@3000K):** 1035 lumens
- **Dimming:** Dims to 10% (phase cut LE/TE) with compatible dimmers; 120V input
- Matte Black and Paintable Matte White Decorative Overlays (sold separately)
- Mounting hardware and E26 adapter included
- AIR-TITE, wet location-listed, IC-rated, and ENERGY STAR® certified
- 50,000 hrs of maintenance-free operation
- 5-year warranty

1. T24 and RoHS are self-tested by Cooper Lighting Solutions. Not a third party certification.

Order Information

Catalog Number	Module	Lumens (@3000K)	CRI/CCT	Driver	Finish	Packaging
HLCEMS410FS1E	4-inch LED Disk Light with Integrated Motion Sensor	1035 lm	90+ CRI, 5-color Field-SeleCCTable™ CCT: 2700/3000/3500/4000/5000K	10% Phase Cut LE/TE Dimming, 120V 60Hz	Matte White	Recyclable 4-color plastic-free packaging
HLCEMS410FS1E-CA	4-inch LED Disk Light Integrated Motion Sensor (California Version)[2]	1035 lm	90+ CRI, 5-color Field-SeleCCTable™ CCT: 2700/3000/3500/4000/5000K	10% Phase Cut LE/TE Dimming, 120V 60Hz	Matte White	Recyclable 4-color plastic-free packaging
HLCEMS410FS1E-6BP	4-inch LED Disk Light with Integrated Motion Sensor (6-pack)	1035 lm	90+ CRI, 5-color Field-SeleCCTable™ CCT: 2700/3000/3500/4000/5000K	10% Phase Cut LE/TE Dimming, 120V 60Hz	Matte White	6 Pack Recyclable 4-color plastic-free packaging

2. California versions do not include Recessed Housing Mounting Hardware (Retrofit Springs, E26 Edison Socket Adapter) for mounting to compatible housings.

Accessories (sold separately)

Accessories
Decorative Trim Overlays **HLCEMS4TRMMB** = 4" Round Decorative Overlay, Matte Black **HLCEMS4TRMWH** = 4" Round Decorative Overlay, Paintable Matte White

HLCEMS4TRMWH
Paintable Matte White

HLCEMS4TRMMB
Matte Black

Dimensional and Mounting Details

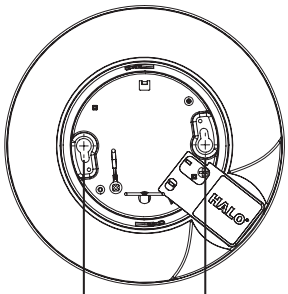

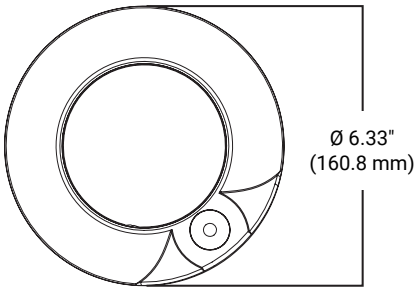

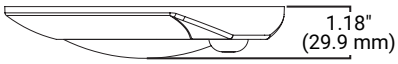

MOTION SENSOR

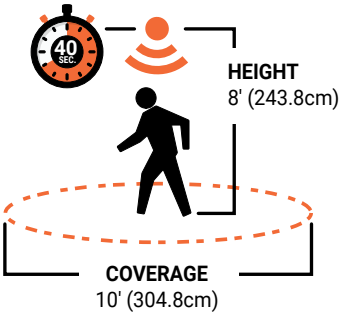

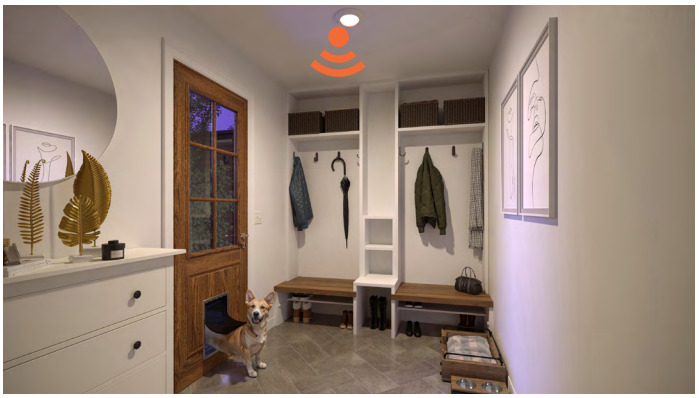

Compatible Junction Boxes [4]

Round
New Work Fixture Box (Plastic)
4" Diameter x 2-3/16"

Round
New Work Ceiling Box (Plastic)
3-1/2" Diameter x 2-3/4"

Round
Old Work Box (Plastic)
4-1/4" Diameter flange (3-1/2" I.D.) x 2-5/8"

Round
New Work Fixture Box (Plastic) w/Bar Hanger
4" x 2-3/16"

JB4FR2
4" NC JBox for Fire Rated Ceilings
4" diameter x 5-1/2"
(102mm x 140mm)

4. This is a representative list of compatible junction boxes only. Information contained in this literature about other manufacturers' products is from published information made available by the manufacturer and is deemed to be reliable, but has not been verified. Cooper Lighting Solutions makes no specific recommendation on product selection and there are no warranties of performance or compatibility implied. Installer must determine that site conditions are suitable to allow proper installation.

Compatible Housings

The non-California HLCE Series LED Disc Light is UL Certified for use with the following recessed housings.

HALO - 4" Housings

Standard Housings	E4ICATSB, E4TATSB, E4RTATSB
Junction Box Housings	JB4FR2

HALO - 5" Housings

Standard Housings	H5ICAT, H5RICAT, E5ICAT, E5RICAT
Shallow Housings	H25ICAT

Product Specifications

Fixture
- Twist-release polycarbonate lens
- Stamped aluminum fixture
- Integrated PIR Motion Sensor

LED Array
- Color Temperature: Field selectable color temperatures (CCT): 2700K, 3000K, 3500K, 4000K, 5000K
- Color Quality: 90+ CRI minimum
- Color Accuracy within 4 step on endpoints 6 in the middle provides excellent color quality and uniformity
- Factory default color temperature (CCT) is set to bright white (3000K)
- Backlit LED technology
- Expected Life: L70 at 50,000 hours projected in accordance with TM-21

Optical Assembly
- Precision engineered optic provides uniform luminance from a low-profile convex lens
- Removable lens for easy installation from below the ceiling.

Driver & Dimming
- Integral 120V 60Hz constant current driver provides noise-free, high-efficiency operation
- Dimmable: Continuous, flicker-free phase cut (leading-edge/trailing-edge - LE/TE) dimming from 100% to 10% output with compatible dimmers
- See this fixture's Dimming Guide for compatible dimmers
  - Tip: For optimal dimming performance, consider dimmers with low-end trim adjustment; note that some dimmers require a neutral wire in the box

Wiring
- Wire nuts provided for mains connections
- The included E26 medium screw-base Edison adapter provides easy retrofit of incandescent housings (non-California product only).
- Includes E26 medium socket adapter provides mains connections for recessed housing installations.
- Reference installation instructions for complete mounting steps

Electrical Junction Box Mounting
- HLCE fixtures may be used in compatible electrical junction boxes in direct contact with insulation including spray foam insulation
- Installs from below the ceiling
- Suitable for installation in most 3-1/2" and 4" octagon and round electrical junction boxes.
- Compatible with compact (pancake) junction boxes
- The installer must ensure compatibility of fit, wiring and proper mounting in the electrical junction box. This includes all applicable national and local electrical and building coded NEMA LSD 57-2013
- Reference installation instructions for complete mounting steps

Recessed Housing Mounting
- Extension Springs for 4" & 5" housings included in the box (Compatible with Halo 4" & 5" housings, refer list)
- Not for use in recessed housings in direct contact with spray foam insulation refer to NEMA LSD 57-2013
- The included wire nuts and E26 medium socket adapter provide easy mounting to recessed housings (non-California product only)
- Reference installation instructions for complete mounting steps

Compliance
- cULus certified for US and Canada
- Damp location listed
- Airtight per ASTM-E283 (no gasket necessary)
- Suitable for use in clothes closets when installed in accordance with the NEC 410.16 spacing requirements
- EMI/RFI emissions per FCC 47CFR Part 15 consumer limits
- Contains no mercury or lead and RoHS compliant[1]
- Photometric testing in accordance with IES LM-79-08
- Lumen maintenance projections in accordance with IES LM-80-08 and TM-21-11
- ENERGY STAR® certified, reference Certified Light Fixtures database
- Certified to State of California Title 20, State regulated LED Lamp; reference Modernized Appliance Efficiency Database System (MAEDBS) for State-regulate d LED Lamp
- Can be used for State of California Title 24 high efficacy LED compliance under JA8[1], reference Modernized Appliance Efficiency Database System (MAEDBS) for 2022 JA8 High Efficacy Lighting

Warranty
- Five year limited warranty, consult website for details. www.cooperlighting.com/warranty

1. T24 and RoHS are self-tested by Cooper Lighting Solutions. Not a third party certification.

Energy Data

HLCEMS410FS1E	
Lumens	1000 (nominal)
Input Voltage	120V
Input Current	0.112
Input Power	12.1W
Driver Efficiency	68%
Inrush(A)	3.4
THDi	45%
PF	>0.9
T Ambient	-30°C to +40°C
Sound Rating	<22dBA
Efficacy (LPW)	82 LPW

Catalog Number	CCT	Watts	lumens	LPW	CRI
HLCEMS410FS1E	2700K	12.2	1000	82.2	92
	3000K	12.2	1035	84.8	94
	3500K	12.2	1065	87.0	95
	4000K	12.2	1075	88.3	95
	5000K	12.2	1065	87.5	93

Photometric Data

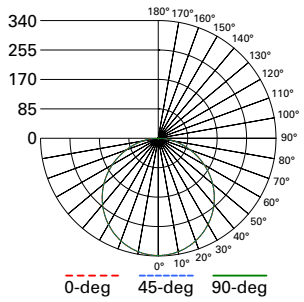

HLCEMS410FS1E-3000K

Spacing criterion:
(0-180) 1.26 | (90-270) 1.26 | (Diagonal) 1.38
Beam Angle (50%) 115°
Field Angle (10%) 170°
Lumens: 1035
Input Watts: 12.2 W
Efficacy: 84.8 LPW
UGR: 29
Test Report: P1057167

Zonal Lumen	Lumens	% Lumens
0-30	264	25.5
0-40	434	41.9
0-60	774	74.8
0-90	1021	98.6

CCT: Range of 2700K - 5000K

TM-30-15	Rf = 91
	Rg = 100
CRI/CIE	Ra = 94
	R9 = 67.5

Cooper Lighting Solutions
1121 Highway 74 South
Peachtree City, GA 30269
P: 770-486-4800
www.cooperlighting.com

© 2025 Cooper Lighting Solutions
All Rights Reserved.

Specifications and dimensions subject to change without notice.