ELLIOTT ELECTRIC SUPPLY
We Deliver...Lower Cost, Quality Products, & Personal Service
2310 N. Stallings Dr.
Nacogdoches, TX 75964-0
Phone: 9365697941
Fax: 9365604685



# HLC6FS1E 6" 15W LED DISK LIGHT 27K/3K/25K/4K/5K DIM 120V

*COOPER LIGHTING SOLUTIONS*

| | |
|---|---|
| Catalog Number | HLC6FS1E |
| Manufacturer | COOPER LIGHTING SOLUTIONS |
| Description | 6" 15W LED DISK LIGHT 27K/3K/25K/4K/5K DIM 120V |
| Weight per unit | N/A |
| Product Category | |

## Descriptions

| | |
|---|---|
| Description | 6" 15W LED DISK LIGHT 27K/3K/25K/4K/5K DIM 120V |

## Manufacturer Information

| | |
|---|---|
| Brand | Cooper Lighting Solutions |
| Manufacturers Part Number | HLC6FS1E-24P |
| UPC | 783363 |

## Taxonomies, Classifications, and Categories

| | |
|---|---|
| Category Description | LED GENERAL PURPOSE LIGHTING |

## Availability

| | |
|---|---|
| Minimum Qty | 24 |

## Packaging

| | |
|---|---|
| Carton | 24 |
| Weight Per Each | N/A |

| | | | | | |
|---|---|---|---|---|---|
| **Project** | | **Catalog #** | | **Type** | |
| **Prepared by** | | **Notes** | | **Date** | |

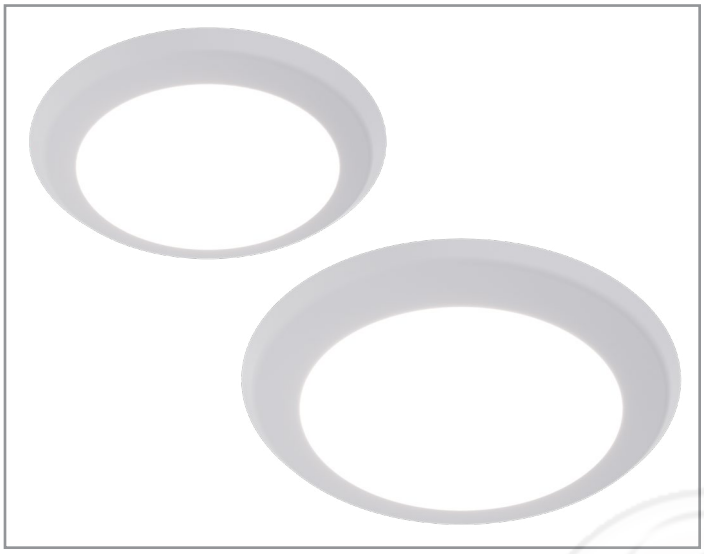

# HALO

## HLC Tapered Surface Mount LED Disk Lights

### HLC4FS1E-24P • HLC6FS1E-24P

Low-profile 4" and 6" tapered disk lights with 5-color selectability, wet-location rating, and smooth 10% dimming. Mounts directly to junction boxes for a flush, clean ceiling finish. Twist-release lens enables quick installation and CCT selection. Available in economical 24-packs for high-volume installs.

**Typical Applications** Residential • Multifamily • Hospitality

## Interactive Menu


- Order Information page 2
- Product Specifications page 3
- Energy Data page 4
- Photometric Data page 4
- Product Warranty


Refer to ENERGY STAR® Certified Products List.
Can be used to comply with California Title 24 High Efficacy requirements.
Certified to California Appliance Efficiency Database under JA8.

## Top Product Features

- 4" & 6" Surface Mount LED Disk Light (Round)
- Ultra-fast below-the-ceiling installation; no clips or plates needed
- Installs in many 3-1/2" & 4" (3O/4O) octagonal, or round standard & pancake junction boxes (See compatibility list)
- **5-color Field-SeleCCTable:** (27/30/35/40/5000K); 90+ CRI
- **Brightness (@3000K):** 690 or 970 lumens
- **Dimming:** Dims to 10% (phase cut LE/TE) with compatible dimmers*; 120V input
- Mounting hardware included
- Integral gasket meets AIR-TITE and code compliance for additional energy savings
- Wet location-listied for shower or covered outdoor areas.
- ENERGY STAR® certified
- 50,000 hrs of maintenance-free operation
- 5-year warranty

* Consult the HLC Dimming Guide for dimmer compatibility.

1. T24 and RoHS are self-tested by Cooper Lighting Solutions. Not a third party certification.

## Dimensional and Mounting Details

### 4" - HLC4FS1E

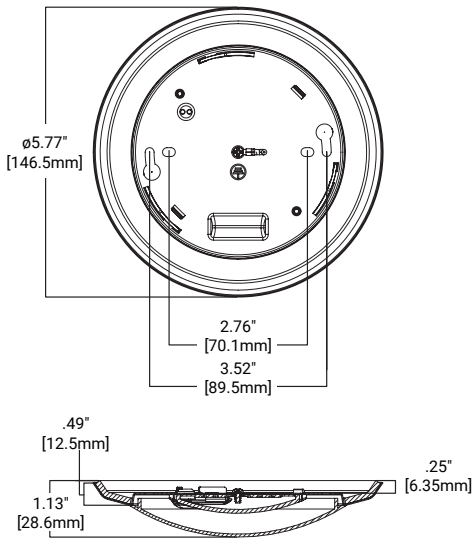


### 6" - HLC6FS1E

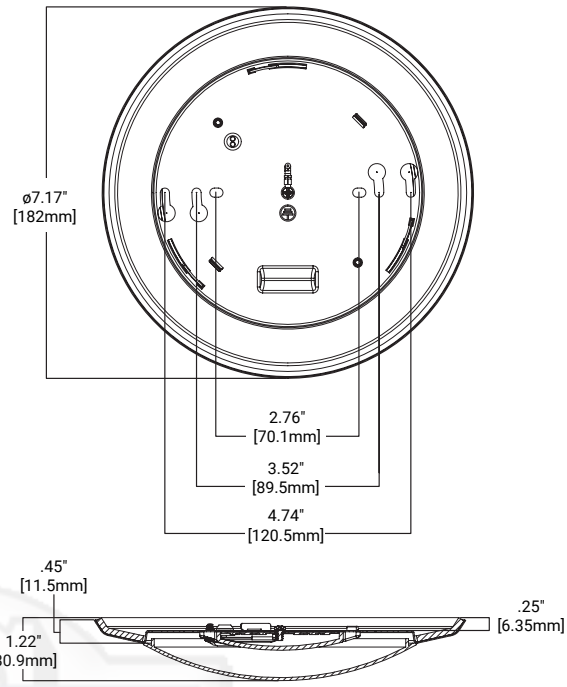


## Order Information

| Catalog Number | Module | Lumens (@3000K) | CRI/CCT | Driver | Finish | Packaging |
|---|---|---|---|---|---|---|
| **HLC4FS1E-24P** | 4" LED Disk Light, Bulk 24 Pack | 690 lm | 90+ CRI, 5-color Field-SeleCCTable™ CCT: 2700/3000/3500/4000/5000K | 10% Phase Cut LE/TE Dimming, 120V 60Hz | Matte White | 24 pack, Plastic-free Recyclable |
| **HLC6FS1E-24P** | 6" LED Disk Light, Bulk 24 Pack | 970 lm | 90+ CRI, 5-color Field-SeleCCTable™ CCT: 2700/3000/3500/4000/5000K | 10% Phase Cut LE/TE Dimming, 120V 60Hz | Matte White | 24 pack, Plastic-free Recyclable |

## Compatible Junction Boxes (2)



**Octagon**
**Steel Light Fixture w/Fan Box**
4" x 4" x 2-1/8"



**Square**
**Steel Deep Box**
4" x 4" x 2-1/8"



**Round**
**New Work Fixture Box (Plastic)**
4" Diameter x 2-3/16"



**Round**
**New Work Ceiling Box (Plastic)**
3-1/2" Diameter x 2-3/4"



**Round**
**Old Work Box (Plastic)**
4-1/4" Diameter flange (3-1/2" I.D.) x 2-5/8"



**4" round surface mount box**
4" diameter x 1-1/2"
(102mm x 38mm)



**TP316**
**For non-metallic cable**
4" x 4" x 2-1/8"



**TP317**
**For metal clad cable**
4" x 4" x 2-1/8"



**Round ceiling pan** (3)
4" diameter x 13/16"
(102mm x 21mm)



**Round New Work Fixture Box (Plastic) w/Bar Hanger**
4" x 2-3/16"



**JB4FR2 - 4" New Construction Junction Box Housing** (Suitable for use in Fire Rated Ceiling construction)
4" diameter x 5-1/2"
(102mm x 140mm)

2. This is a representative list of compatible junction boxes only. Information contained in this literature about other manufacturers' products is from published information made available by the manufacturer and is deemed to be reliable, but has not been verified. Cooper Lighting Solutions makes no specific recommendation on product selection and there are no warranties of performance or compatibility implied. Installer must determine that site conditions are suitable to allow proper installation of the mounting bracket in the box.

3. To ensure proper installation and airtite seal, pan/pancake boxes must be installed completely flush with ceiling material.

## Product Specifications

### Construction
- Stamped steel

### Optics
- Twist-release polycarbonate lens
- Precision engineered optic provides uniform luminance from a low-profile convex lens
- Removable lens for easy install from below installation

### LED
- Backlit LED technology
- 5CCT Field Selectable color temperature (2700K, 3000K, 3500K, 4000K, 5000K)
- 90 CRI is standard
- Color accuracy within 7 SDCM at the CCT endpoints, provide color accuracy and uniformity.
- Expected Life: L70 at 50,000 hours projected in accordance with TM-21

### Driver
- Integral 120V 60Hz constant current driver provides virtually noise free operation.
- Continuous, flicker-free dimming from 100% to 10% with select leading or trailing edge 120V phase cut dimmers. See dimming guide.
- Dimming to 10% is best assured using dimmers with low end trim adjustment. Consult dimmer manufacturer for compatibility and conditions of use. (Note some dimmers require a neutral in the wallbox.)
- **TIPS:** For optimal dimming performance, consider dimmers with low-end trim adjustment and note that some dimmers require a neutral wire in the wallbox. (See the HLC Dimming Guide and then consult dimmer manufacturer for compatibility and conditions of use.)

### Electrical Junction Box Mounting
- HLC fixtures may be used in compatible electrical junction boxes in direct contact with insulation including spray foam insulation
- Keyhole mounting slots allow for quick installation with provided screws
- Installs from below the ceiling
- Suitable for installation in most 3-1/2" and 4" octagon and round electrical junction boxes.
- Mounting holes at 2.76", 3.52" and 4.74" allow for mounting to most junction boxes.
- Compatible with compact (pancake) junction boxes (ensure pancake box is flush with the ceiling)
- The installer must ensure compatibility of fit, wiring and proper mounting in the electrical junction box. This includes all applicable national and local electrical and building coded NEMA LSD 57-2013
- Reference installation instructions for complete mounting steps

### Gasket
- Closed-cell gasket achieves restrictive airflow requirements without additional caulking

### Compliance
- ETL certified for US and Canada
- Wet Location listed
- Suitable for use in clothes closets when installed in accordance with the NEC 410.16 spacing requirements.
- Airtight per ASTM-E283 (no gasket necessary)
- EMI/RFI emissions per FCC 47CFR Part 15B
- Contains no mercury or lead and RoHS compliant [1].
- Photometric testing in accordance with IES LM-79-08
- Lumen maintenance projections in accordance with IES LM-80-08 and TM-21-11.
- Can be used for State of California Title 24 high efficacy luminaire compliance [1]
- Can be used for International Energy Conservation Code (IECC) and Washington State Energy Code high efficiency luminaire Compliance
- ENERGY STAR® Certified luminaire - consult ENERGY STAR® Certified Product List

### Warranty
- Five year limited warranty, consult website for details. www.cooperlighting.com/warranty

1. T24 and RoHS are self-tested by Cooper Lighting Solutions. Not a third party certification.



**Cooper Lighting Solutions**
1121 Highway 74 South
Peachtree City, GA 30269
P: 770-486-4800
www.cooperlighting.com

© 2026 Cooper Lighting Solutions
All Rights Reserved.

Specifications and dimensions subject to change without notice.

## Energy Data

| HLC4FS1E | |
|---|---|
| Lumens | 700 |
| Input Voltage | 120V |
| Input current FP | 0.085A |
| Input Power | 11 W |
| Efficiency | 69 |
| Inrush(A) | <1A |
| THDi | <50 |
| PF | >0.9 |
| T Ambient | -20~40°C |
| Sound Rating | ≤22DB |
| Efficacy (LPW) | ≥60 |

| HLC6FS1E | |
|---|---|
| Lumens | 900 |
| Input Voltage | 120V |
| Input current FP | 0.129 |
| Input Power | 14 W |
| Efficiency | 65 |
| Inrush(A) | <1A |
| THDi | <50 |
| PF | >0.9 |
| T Ambient | -20~40°C |
| Sound Rating | ≤22DB |
| Efficacy (LPW) | ≥60 |

| | CCT | Watts | lumens | LPW | CRI |
|---|---|---|---|---|---|
| HLC4FS1E | 2700K | 9.8 | 650 | 66.3 | 92 |
| | 3000K | 9.8 | 690 | 70.4 | 92 |
| | 3500K | 10.0 | 730 | 73 | 92 |
| | 4000K | 9.9 | 750 | 75.8 | 92 |
| | 5000K | 9.6 | 710 | 70 | 92 |

| | CCT | Watts | lumens | LPW | CRI |
|---|---|---|---|---|---|
| HLC6FS1E | 2700K | 14.6 | 910 | 62.3 | 92 |
| | 3000K | 14.7 | 970 | 66 | 92 |
| | 3500K | 15.1 | 1050 | 69.5 | 92 |
| | 4000K | 14.9 | 1060 | 71.1 | 92 |
| | 5000K | 14.5 | 1010 | 69.7 | 92 |

## Photometric Data

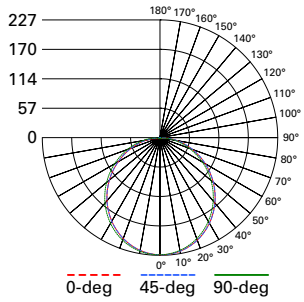


**HLC4FS1E-24P-3000K**
Spacing criterion:
(0-180) 1.24 | (90-270) 1.25 | (Diagonal) 1.36
Beam Angle: 113°
Field Angle: 175°
Lumens: 690
Input Watts: 9.8 W
Efficacy: 70.4 LPW
UGR: 28
Test Report: P1219800

| Zonal Lumen | Lumens | % Lumens |
|---|---|---|
| 0-30 | 175 | 26.5 |
| 0-40 | 285.9 | 43.3 |
| 0-60 | 505.5 | 76.6 |
| 0-90 | 674 | 102.1 |

| | |
|---|---|
| TM-30-15 | Rf = 92 |
| | Rg = 99 |
| CRI/CIE | Ra = 94.7 |
| | R9 = 70 |




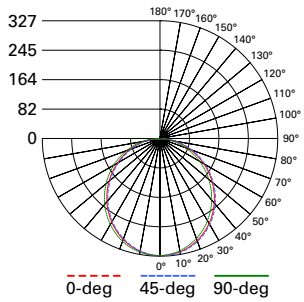


**HLC6FS1E-24P-3000K**
Spacing criterion:
(0-180) 1.24 | (90-270) 1.24 | (Diagonal) 1.36
Beam Angle: 111°
Field Angle: 171°
Lumens: 970
Input Watts: 14.7 W
Efficacy: 66 LPW
UGR: 26
Test Report: P1219805

| Zonal Lumen | Lumens | % Lumens |
|---|---|---|
| 0-30 | 251 | 26.7 |
| 0-40 | 409.7 | 43.6 |
| 0-60 | 721.4 | 76.8 |
| 0-90 | 952 | 101.3 |

| | |
|---|---|
| TM-30-15 | Rf = 92 |
| | Rg = 100 |
| CRI/CIE | Ra = 94 |
| | R9 = 69 |






**Cooper Lighting Solutions**
1121 Highway 74 South
Peachtree City, GA 30269
P: 770-486-4800
www.cooperlighting.com

© 2026 Cooper Lighting Solutions
All Rights Reserved.

Specifications and dimensions
subject to change without notice.