ELLIOTT ELECTRIC SUPPLY
We Deliver...Lower Cost, Quality Products, & Personal Service
2310 N. Stallings Dr.
Nacogdoches, TX 75964-0
Phone: 9365697941
Fax: 9365604685



# HB101A 150W INCAN PAR39 BULLET FLD

*RAB LIGHTING*

| | |
|---|---|
| Catalog Number | HB101A |
| Manufacturer | RAB LIGHTING |
| Description | Incandescent Floodlight, 150 W, 120 to 277 V, Bronze, Die-Cast Aluminum (Housing) Material, Medium Base, Non Dimmable, 5-5/8 in Diameter, 7 in Height, 1.6 lb |
| Weight per unit | 1.5 (lbs/each) |
| Product Category | Incandescent Floodlights |

## Material, Color, and Finish

| | |
|---|---|
| Color | Bronze |

## Descriptions

| | |
|---|---|
| Description | 150W INCAN PAR39 BULLET FLD |
| Long Description | Landscape Flood H System Bullet Style 150W Par38 Bronze |
| Product Type | FLD H Syst Bullet Style 150W PAR38 BZ |
| Extra Long Description | RAB HB101A FLD H SYST BULLET STYLE |

## Manufacturer Information

| | |
|---|---|
| Brand | RAB Lighting Inc |
| GTIN | 00019813101217 |
| UPC | 885360 |

## Taxonomies, Classifications, and Categories

| | |
|---|---|
| Category Description | Incandescent (Except Residential) |
| Type | Landscape |

## Packaging

| | |
|---|---|
| Carton | 1 |
| Package | 12 |
| Weight Per Each | 1.5 (lbs/each) |

# HB101A



Bullet design. Durable one pierce die cast with rugged mounting arm, weatherproof gasket and drain holes. Accepts 150 Watt PAR 38 max. Lamp not supplied.

Color: Bronze

Weight: 1.5 lbs

| Project: | Type: |
|---|---|
| Prepared By: | Date: |

### Lamp Info

| | |
|---|---|
| Type | PAR38 |
| Watts | 150W |
| Shape/Size | N/A |
| Base | N/A |
| ANSI | N/A |
| Hours | N/A |
| Lamp Lumens | N/A |
| Efficacy | N/A |

### Ballast Info

| | |
|---|---|
| Type | N/A |
| 120V | N/A |
| 208V | N/A |
| 240V | N/A |
| 277V | N/A |
| Input Watts | N/A |

## Technical Specifications

### Compliance

**UL Listed:**
Suitable for wet locations. Suitable for mounting within 4ft (1.2m) of the ground. When using as an uplight in outdoor applications, a Hood or a Visor must be used.

### Electrical

**Sockets:**
Porcelain with all copper current carrying components

### Construction

**Swivels:**
Fully adjustable with sure-grip locks. 1/2" NPS threaded arm with serrated locking swivel fits all standard mounting covers. Color matched EZ Grip lock nuts.

**Housings:**
Die-cast aluminum with powder coat finish

**Gaskets:**
High-temperature silicone rubber extends around both socket and lamp

### Optical

**Lamps:**
Medium base Par-38 lamps up to 150W. Halogen lamps give brighter light and choice of beam spreads.

### Other

**Buy American Act Compliance:**
RAB values USA manufacturing! Upon request, RAB may be able to manufacture this product to be compliant with the Buy American Act (BAA). Please contact customer service to request a quote for the product to be made BAA compliant.


Copyright © 2024 RAB Lighting All Rights Reserved Note: Specifications are subject to change at any time without notice

## Dimensions

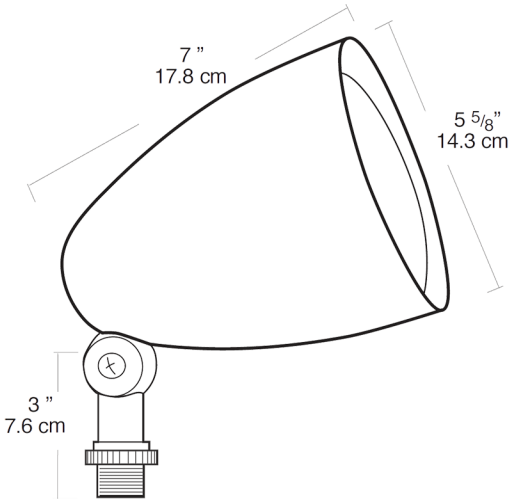


## Features

- Lamp recessed 1" from lip for side glare reduction
- Set screw for hood, grill or visor attachment
- Heavy duty mounting arm with internal O-ring, locking teeth, and stainless steel screw
- Large Silicone rubber gasket provides weatherproof protection around the lamp and socket
- Caution: When using as an uplight in outdoor applications a Hood or a Visor must be used
- HV1 Visor with integral guard and glass lens for maximum glare reduction and lamp protection
- HG1 Guard: Protects lamp from damage and vandalism
- HH1 Hood with glass lens reduces glare and protects lamp from water and impact damage


Copyright © 2024 RAB Lighting All Rights Reserved Note: Specifications are subject to change at any time without notice