ELLIOTT ELECTRIC SUPPLY
We Deliver...Lower Cost, Quality Products, & Personal Service
2310 N. Stallings Dr.
Nacogdoches, TX 75964-0
Phone: 9365697941
Fax: 9365604685



# H101A 150W FLD H SYS BELL STYLE BRZ

*RAB LIGHTING*

| | |
|---|---|
| Catalog Number | H101A |
| Manufacturer | RAB LIGHTING |
| Description | Incandescent Floodlight, 150 W, 120 to 277 V, Bronze, Die-Cast Aluminum (Housing) Material, Medium Base, Non Dimmable, 5-5/8 in Diameter, 7 in Height, 1.4 lb |
| Weight per unit | 1.3 (lbs/each) |
| Product Category | Incandescent Floodlights |

## Features

| | |
|---|---|
| Wattage | 150 |

## Descriptions

| | |
|---|---|
| Description | 150W FLD H SYS BELL STYLE BRZ |
| Long Description | Landscape Flood H System Bell Style 150W Par38 Bronze |
| Product Type | Flood H System Bell Style 150W PAR38 Bro |
| Special Features | Bell Style |
| Extra Long Description | RAB H101A FLOOD H SYSTEM BELL STYLE |

## Manufacturer Information

| | |
|---|---|
| Brand | RAB Lighting Inc |
| GTIN | 00019813101507 |
| UPC | 885360 |

## Taxonomies, Classifications, and Categories

| | |
|---|---|
| Category Description | Incandescent (Except Residential) |
| Type | Landscape |

## Packaging

| | |
|---|---|
| Carton | 1 |
| Weight Per Each | 1.3 (lbs/each) |

# H101A



Large size flood for easier relamping and glare reduction. Durable one piece die casting with rugged mounting arm, weatherproof gasket and drain holes. Accepts 150 Watt PAR 38 max. Lamp not supplied.

Color: Bronze

Weight: 1.3 lbs

| Project: | Type: |
|---|---|
| Prepared By: | Date: |

### Lamp Info

| | |
|---|---|
| Type | PAR38 |
| Watts | 150W |
| Shape/Size | N/A |
| Base | N/A |
| ANSI | N/A |
| Hours | N/A |
| Lamp Lumens | N/A |
| Efficacy | N/A |

### Ballast Info

| | |
|---|---|
| Type | N/A |
| 120V | N/A |
| 208V | N/A |
| 240V | N/A |
| 277V | N/A |
| Input Watts | N/A |

## Technical Specifications

### Compliance

**UL Listed:**
Suitable for wet locations. Suitable for mounting within 4ft (1.2m) of the ground. When using as an uplight in outdoor applications, a Hood or a Visor must be used.

### Electrical

**Sockets:**
Porcelain with all copper current carrying components

### Construction

**Swivels:**
Fully adjustable with sure-grip locks. 1/2" NPS threaded arm with serrated locking swivel fits all standard mounting covers. Color matched EZ Grip lock nuts.

**Housings:**
Die-cast aluminum with powder coat finish

**Gaskets:**
High-temperature silicone rubber extends around both socket and lamp

### Optical

**Lamps:**
Medium base Par-38 lamps up to 150W. Halogen lamps give brighter light and choice of beam spreads.

### Other

**Buy American Act Compliance:**
RAB values USA manufacturing! Upon request, RAB may be able to manufacture this product to be compliant with the Buy American Act (BAA). Please contact customer service to request a quote for the product to be made BAA compliant.


Copyright © 2024 RAB Lighting All Rights Reserved Note: Specifications are subject to change at any time without notice

## Dimensions

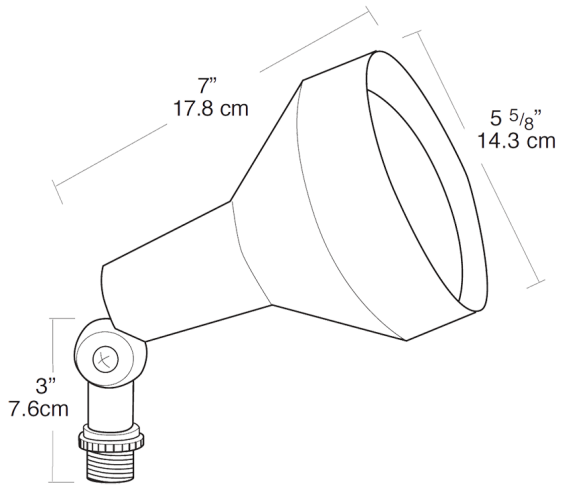


## Features

- Lamp recessed 1" from lip for side glare reduction
- Set screw for hood, grill or visor attachment
- Large Silicone rubber gasket provides weatherproof protection around the lamp and socket
- Caution: When using as an uplight in outdoor applications a Hood or a Visor must be used
- HV1 Visor with integral guard and glass lens for maximum glare reduction and lamp protection
- HG1 Guard: Protects lamp from damage and vandalism
- HH1 Hood with glass lens reduces glare and protects lamp from water and impact damage


Copyright © 2024 RAB Lighting All Rights Reserved Note: Specifications are subject to change at any time without notice