Elliott Electric Supply

We Deliver...Lower Cost, Quality Products, & Personal Service

2310 N. Stallings Dr.
Nacogdoches, TX 75964-0
Phone: 9365697941
Fax: 9365604685



GLED78W 277V 5668LUMEN LT FX

RAB LIGHTING

Catalog Number	GLED78W
Manufacturer	RAB LIGHTING
Description	Garage Lights 8963 Lumens Gled 78W 5000K White
Weight per unit	15.8 (lbs/each)
Product Category	Led Parking Lighting

Features

Voltage Rating	120/277
Wattage	78
Lumens	8652

Descriptions

Description	277V 5668LUMEN LT FX
Long Description	Garage Lights 8963 Lumens Gled 78W 5000K White
Product Type	Ceiling 78W Cool With Prismatic Len
Extra Long Description	RAB GLED78W CEILING 78W COOL WITH P

Manufacturer Information

Brand	RAB Lighting Inc
	Rab Lighting
GTIN	00019813039046
Manufacturers Part Number	GLED78W
UPC	885360

Taxonomies, Classifications, and Categories

Category Description	LED CANOPY, PARKING, POLE MOUNTED & ROADWAY LIGHTING
Type	GARAGE/CANOPY

Packaging

Carton	1
Weight Per Each	15.8 (lbs/each)

Uses, Certifications, and Standards

Application	Outdoor

GLED78W



78 Watts of energy efficient LED garage lighting replaces 250 Watt Metal Halide. 100,000 hour LED lifespan. 5-year, no-compromise warranty. High-performance output maximizes spacing criterion.

Color: White

Weight: 15.8 lbs

Project:	Type:
Prepared By:	Date:

Driver Info

Type	Constant Current
120V	0.67A
208V	0.44A
240V	0.38A
277V	0.29A
Input Watts	80.4W

LED Info

Watts	78W
Color Temp	5100K (Cool)
Color Accuracy	71 CRI
L70 Lifespan	100,000 Hours
Lumens	8,963 lm
Efficacy	111.5 lm/W

Technical Specifications

Compliance

UL Listed:
Suitable for Wet Locations. Covered Ceiling Mount Only.

IESNA LM-79 & LM-80 Testing:
RAB LED luminaires and LED components have been tested by an independent laboratory in accordance with IESNA LM-79 and LM-80.

DLC Listed:
This product is on the Design Lights Consortium (DLC) Qualified Products List and is eligible for rebates from DLC Member Utilities. Designed to meet DLC 5.1 requirements.
DLC Product Code: PWPW329E

Performance

Lifespan:
100,000-Hour LED lifespan based on IES LM-80 results and TM-21 calculations

Wattage Equivalency:
Equivalent to 250W Metal Halide

Electrical

Driver:
Driver: Constant Current, Class 2, 120V-277V, 50/60 Hz, 6kv Surge Protection, 120V: 0.67A, 208V: 0.44A, 240V: 0.38A, 277V: 0.29A

Dimming Driver:
Driver includes dimming control wiring for 0-10V dimming systems. Requires separate 0-10V DC dimming circuit. Dims down to 10%.

THD:
2.4% at 120V, 8.23% at 277V

Power Factor:
99.9% at 120V, 96.5% at 277V

LED Characteristics

LEDs:
6x13W high-output, long-life LEDs

Color Consistency:
7-step MacAdam Ellipse binning to achieve consistent fixture-to-fixture color

Color Stability:
LED color temperature is warrantied to shift no more than 200K in color temperature over a 5-year period

Color Uniformity:
RAB's range of Correlated Color Temperature follows the guidelines of the American National Standard for Specifications for the Chromaticity of Solid State Lighting (SSL) Products, ANSI C78.377-2017.

Construction

Cold Weather Starting:
The minimum starting temperature is -40°C (-40°F)

Maximum Ambient Temperature:
Suitable for use in up to 40°C (104°F)

Housing:
Precision die-cast aluminum housing and door frame

Mounting:
Easy hanging plate with hooks for ceiling mount

Lens:
Prismatic polycarbonate lens

Reflector:
Specular vacuum-metallized polycarbonate

Gaskets:
High-temperature silicone

Finish:
Formulated for high durability and long-lasting color

Green Technology:
Mercury and UV free. RoHS-compliant components.

Copyright © 2024 RAB Lighting All Rights Reserved Note: Specifications are subject to change at any time without notice

Technical Specifications (continued)

Other

Patents:
The design of GLED78 is protected by patents pending in US, Canada, China, Taiwan and Mexico

Warranty:
RAB warrants that our LED products will be free from defects in materials and workmanship for a period of five (5) years from the date of delivery to the end user, including coverage of light output, color stability, driver performance and fixture finish. RAB's warranty is subject to all terms and conditions found at rablighting.com/warranty.

Buy American Act Compliance:
RAB values USA manufacturing! Upon request, RAB may be able to manufacture this product to be compliant with the Buy American Act (BAA). Please contact customer service to request a quote for the product to be made BAA compliant.

Optical

BUG Rating:
B3 U3 G2

Dimensions

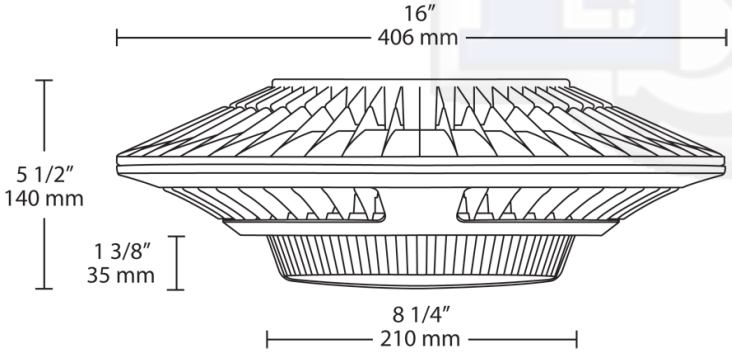

Features

- Low-profile design Ideal for Parking Garages
- 78W Replaces 250W MH Luminaires
- 100,000-hour LED lifespan based on IES LM-80 results and TM-21 calculations
- Up to 25% Reduction in Fixture Count
- Lock screw provided for pendant mount

Copyright © 2024 RAB Lighting All Rights Reserved Note: Specifications are subject to change at any time without notice

Ordering Matrix

Family	Wattage	Color Temp	Back Box	Finish	Driver
GLED	78			W	
	52 = 52W **78 =** 78W **26 =** 26W	**Blank =** 5000K Cool **N =** 4000K Neutral **Y =** 3000K Warm	**Blank =** No Backbox **BB =** Back Box	**Blank =** Bronze **W =** White	**Blank =** No Option **/D10 =** 0-10V Dimming **/480 =** 480V **/480/D10 =** 480V w/0-10V Dimming **/BL =** Bi-Level

Copyright © 2024 RAB Lighting All Rights Reserved Note: Specifications are subject to change at any time without notice