ELLIOTT ELECTRIC SUPPLY
We Deliver...Lower Cost, Quality Products, & Personal Service
2310 N. Stallings Dr.
Nacogdoches, TX 75964-0
Phone: 9365697941
Fax: 9365604685



GLED52W 52W LED CNPY 51K WHT 84LPW

RAB LIGHTING

Catalog Number	GLED52W
Manufacturer	RAB LIGHTING
Description	RAB GLED52W CEILING 52W COOL WITH P
Weight per unit	17.4 (lbs/each)
Product Category	Led Parking Lighting

Features

Voltage Rating	120/277
Wattage	52
Lumens	5952

Descriptions

Description	52W LED CNPY 51K WHT 84LPW
Long Description	RAB GLED52W CEILING 52W COOL WITH P
Product Type	Ceiling 52W Cool With Prismatic Len

Manufacturer Information

Brand	RAB Lighting Inc
	Rab Lighting
GTIN	00019813038742
Manufacturers Part Number	GLED52W
UPC	885360

Taxonomies, Classifications, and Categories

Category Description	LED CANOPY, PARKING, POLE MOUNTED & ROADWAY LIGHTING
Type	GARAGE/CANOPY

Availability

Manufacturer Status	Inactive

Packaging

Carton	1
Weight Per Each	17.4 (lbs/each)

Uses, Certifications, and Standards

Application	Outdoor

GLED52W



52 Watts of energy efficient LED garage lighting replaces 175 Watt Metal Halide. 100,000 hour LED lifespan. 5-year, no-compromise warranty. High-performance output maximizes spacing criterion.

Color: White

Weight: 17.4 lbs

Project:	Type:
Prepared By:	Date:

Driver Info

Type	Constant Current
120V	0.45A
208V	0.29A
240V	0.25A
277V	0.20A
Input Watts	53.6W

LED Info

Watts	52W
Color Temp	5100K (Cool)
Color Accuracy	71 CRI
L70 Lifespan	100,000 Hours
Lumens	5,911 lm
Efficacy	110.3 lm/W

Technical Specifications

Compliance

UL Listed:
Suitable for Wet Locations. Covered Ceiling Mount Only.

IESNA LM-79 & LM-80 Testing:
RAB LED luminaires and LED components have been tested by an independent laboratory in accordance with IESNA LM-79 and LM-80.

DLC Listed:
This product is on the Design Lights Consortium (DLC) Qualified Products List and is eligible for rebates from DLC Member Utilities. Designed to meet DLC 5.1 requirements.
DLC Product Code: P78RRGT2

Performance

Lifespan:
100,000-Hour LED lifespan based on IES LM-80 results and TM-21 calculations

Wattage Equivalency:
Equivalent to 175W Metal Halide

Electrical

Driver:
Driver: Constant Current, Class 2, 120V-277V, 50/60 Hz, 6kv Surge Protection, 120V: 0.45A, 208V: 0.29A, 240V: 0.25A, 277V: 0.20A

Dimming Driver:
Driver includes dimming control wiring for 0-10V dimming systems. Requires separate 0-10V DC dimming circuit. Dims down to 10%.

THD:
3.2% at 120V, 6.08% at 277V

Power Factor:
99.9% at 120V, 96.5% at 277V

LED Characteristics

LEDs:
4x13W high-output, long-life LEDs

Color Consistency:
7-step MacAdam Ellipse binning to achieve consistent fixture-to-fixture color

Color Stability:
LED color temperature is warrantied to shift no more than 200K in color temperature over a 5-year period

Color Uniformity:
RAB's range of Correlated Color Temperature follows the guidelines of the American National Standard for Specifications for the Chromaticity of Solid State Lighting (SSL) Products, ANSI C78.377-2017.

Construction

Cold Weather Starting:
The minimum starting temperature is -40°C (-40°F)

Maximum Ambient Temperature:
Suitable for use in up to 40°C (104°F)

Housing:
Precision die-cast aluminum housing and door frame

Mounting:
Easy hanging plate with hooks for ceiling mount

Lens:
Prismatic polycarbonate lens

Reflector:
Specular vacuum-metallized polycarbonate with ultra-white, 97% reflective optics

Gaskets:
High-temperature silicone

Finish:
Formulated for high durability and long-lasting color

Green Technology:
Mercury and UV free. RoHS-compliant components.

Copyright © 2024 RAB Lighting All Rights Reserved Note: Specifications are subject to change at any time without notice

Technical Specifications (continued)

Other

Patents:
The design of GLED52 is protected by patents pending in US, Canada, China, Taiwan and Mexico

Warranty:
RAB warrants that our LED products will be free from defects in materials and workmanship for a period of five (5) years from the date of delivery to the end user, including coverage of light output, color stability, driver performance and fixture finish. RAB's warranty is subject to all terms and conditions found at rablighting.com/warranty.

Buy American Act Compliance:
RAB values USA manufacturing! Upon request, RAB may be able to manufacture this product to be compliant with the Buy American Act (BAA). Please contact customer service to request a quote for the product to be made BAA compliant.

Optical

BUG Rating:
B3 U3 G2

Dimensions

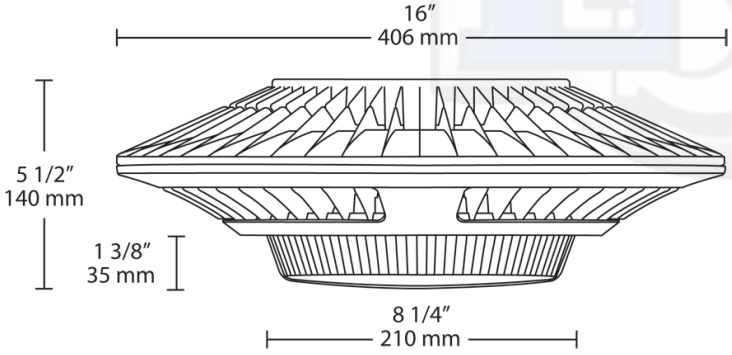

Features

- Low-profile design Ideal for Parking Garages
- 52W Replaces 175W MH Luminaires
- 100,000-hour LED lifespan based on IES LM-80 results and TM-21 calculations
- Up to 25% Reduction in Fixture Count
- Lock screw provided for pendant mount

Copyright © 2024 RAB Lighting All Rights Reserved Note: Specifications are subject to change at any time without notice

Ordering Matrix

Family	Wattage	Color Temp	Back Box	Finish	Driver
GLED	52			W	
	52 = 52W **78 =** 78W **26 =** 26W	**Blank =** 5000K Cool **N =** 4000K Neutral **Y =** 3000K Warm	**Blank =** No Backbox **BB =** Back Box	**Blank =** Bronze **W =** White	**Blank =** No Option **/D10 =** 0-10V Dimming **/480 =** 480V **/480/D10 =** 480V w/0-10V Dimming **/BL =** Bi-Level

Copyright © 2024 RAB Lighting All Rights Reserved Note: Specifications are subject to change at any time without notice