ELLIOTT ELECTRIC SUPPLY
We Deliver...Lower Cost, Quality Products, & Personal Service
2310 N. Stallings Dr.
Nacogdoches, TX 75964-0
Phone: 9365697941
Fax: 9365604685



EZ20SN EZ 20 CU-IN. 1G NAIL ON | KNOCK OUTS

CANTEX,INC

Catalog Number	EZ20SN
Manufacturer	CANTEX,INC
Description	Electrical Switch and Outlet Box, PVC Material, Gray, EZ Model, 20.3 cu.in Capacity, (4) Clamp Cable Entry, 1 Gang, Rectangular, 4 Knockouts, Angled Nail, 2.25 in Length, 3.31 in Width, 3.7 in Height
Weight per unit	0.2610 (lbs/each)
Product Category	Non-Metallic

Features

Installation Type	New Construction

Descriptions

Description	EZ 20 CU-IN. 1G NAIL ON | KNOCK OUTS
Long Description	1-Gang 20 cu. in. EZ BOX New Work Nail-on Residential Electrical Switch and Outlet Box with Wire Clamps Gray
Product Type	20 Cu In Single Gang W/Nails
Extra Long Description	CTX EZ20SN 20 CU IN SINGLE GANG W/N

Manufacturer Information

Brand	CANTEX INC.
GTIN	00088700020221
UPC	881780

Taxonomies, Classifications, and Categories

Category Description	PLASTIC BOXES

Packaging

Carton	100
Package	2500
Weight Per Each	0.2610 (lbs/each)

PART NUMBER	SIZE	"A"	"B"	"C"
EZ20SN	2 ¼" X 3 ⅝" X 3 ¼" four cable clamps, enhanced angled nails for quick mounting between studs	3 ⅞"	2 ¼"	3 ⅛"

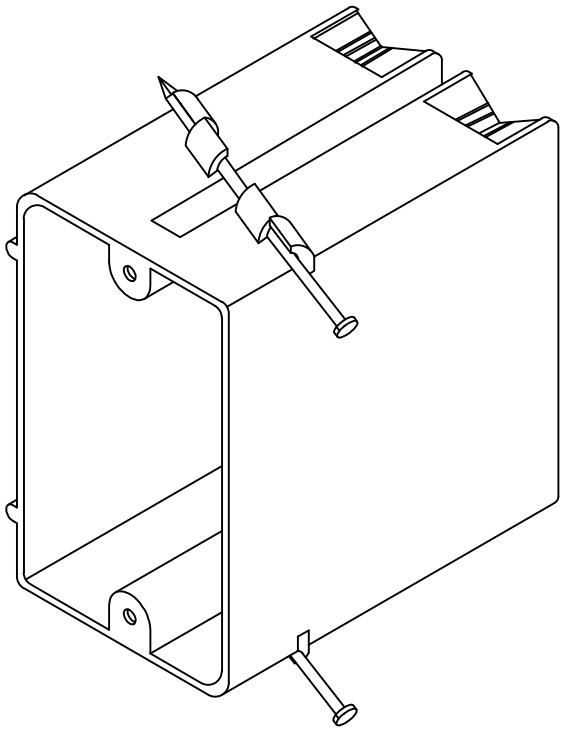

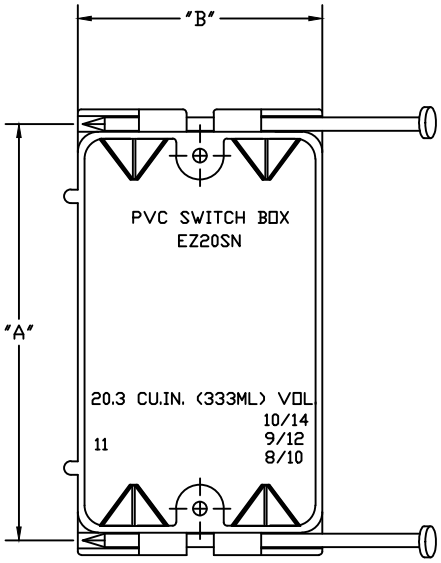

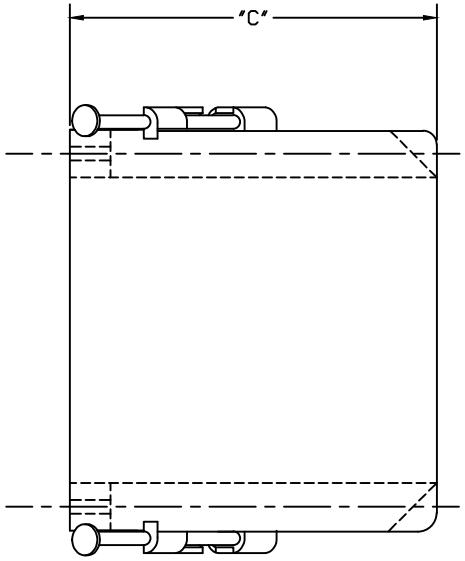

ETL Listed
Conforms to UL514C Specification
Category Code CEYY, QBWY & QCMZ
ETL 2 Hour Wall Fire Rated
Suitable for Masonry Walls
Material is Rigid PVC
For use with Type NM Cable only

CANTEX INC.
Fort Worth, TEXAS

Single Gang EZ Box 20.3 Cubic Inch, Nail On
Single Gang Nonmetallic Nail On Boxes

Drawn By: O.M.	Date: 7/3/17	Ref. EZ20SN