ELLIOTT ELECTRIC SUPPLY
We Deliver...Lower Cost, Quality Products, & Personal Service
2310 N. Stallings Dr.
Nacogdoches, TX 75964-0
Phone: 9365697941
Fax: 9365604685



DVFSQFHIV DIVA 1.5A FAN 3WAY 3SP IVORY CLAM

LUTRON

Catalog Number	DVFSQFHIV
Manufacturer	LUTRON
Description	Lutron Diva 3-Speed Fan Control and Light Switch, Single-Pole/3-Way, 1.5A Fan/1A LED, Clamshell Packaging, Ivory
Weight per unit	0.2500 (lbs/each)
Product Category	Fan Speed Switches & Controls

Features

Contact Configuration	N-O
Contact Rating	1.5
Voltage Rating	120
Wattage	180
Actuator	Paddle Switch
Amperage Rating	1.5
Connection	Wire Leads

Material, Color, and Finish

Color	Ivory
Finish	Gloss

Dimensions and Weight

Size	4.69 x 2.94

Descriptions

Description	DIVA 1.5A FAN 3WAY 3SP IVORY CLAM
Features	The Lutron Diva 3-Speed Fan Switch helps achieve the ideal comfort level for any home by controlling a single fan up to 1.5 Amps. The intuitive rocker switch turns the fan on/off to a preset and the linear slider adjusts between 3 speeds (Low, Medium and, High). Install with Lutron Claro Switches in 3-way applications. Coordinating Claro wall plates and 3-way switches sold separately. Available in 20+ colors to consistently match any Lutron device.
Long Description	Lutron Diva 3-Speed Fan Control and Light Switch, Single-Pole/3-Way, 1.5A Fan/1A LED, Clamshell Packaging, Ivory
Product Type	Diva Quiet Fanspeed Iv CLM
Special Features	Controls 1.5 A fan. Paddle turns on/off. Slide up to increase speed, down to decrease speed. 3 quiet fan speeds for increased comfort. For use with only one ceiling paddle fan. Does not include locator light. Designed to prevent motor hum.
Extra Long Description	LUT DVFSQ-FH-IV DIVA QUIET FANSPEED

ELLIOTT ELECTRIC SUPPLY
We Deliver...Lower Cost, Quality Products, & Personal Service
2310 N. Stallings Dr.
Nacogdoches, TX 75964-0
Phone: 9365697941
Fax: 9365604685

Manufacturer Information

Brand	LUTRON ELECTRONICS
	Lutron
GTIN	00027557748063
Manufacturers Part Number	DVFSQ-FH-IV
UPC	784276

Taxonomies, Classifications, and Categories

Category Description	CEILING FANS AND ACCESSORIES
Type	Fan control, 3-way/single-pole, clamshell packaging

Packaging

Carton	1
Package	6
Weight Per Each	0.2500 (lbs/each)

Uses, Certifications, and Standards

Application	Fan Control
Enclosure	Plastic
Mounting	WALLBOX
Standard	UL, CSA, NOM

DIVA Controls

The designer dimmer that matches your paddle switches.

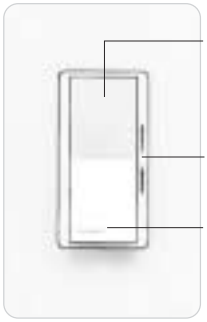

Preset Dimmer



Preset Fan-Speed Controls

PRODUCT FAMILY FEATURES

- Large paddle switch with a captive linear-slide dimmer for a standard designer wallplate opening
- Full family of products for most lighting sources
- Dimmers feature built-in soft-glow nightlight
- Uses standard single-pole and 3-way wiring for easy installation in any home
- For more Diva choices, see the new Diva Satin Colors product line

DIMENSIONS

Front

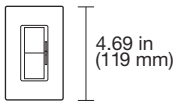

Profile

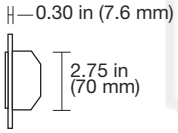

*some models up to 1.44 in (37 mm)

CONTROLS AND ACCESSORIES

Preset Dimmers

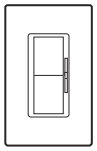

Fan-Speed Controls

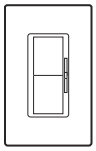

Switches

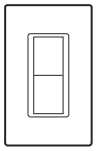

Receptacles

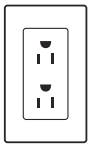

15 A Receptacle

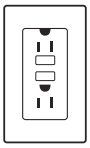

15 A GFCI Receptacle

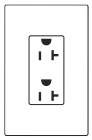

20 A Receptacle

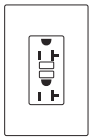

20 A GFCI Receptacle

Telephone/Cable TV Jacks

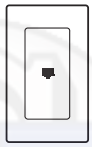

Single Telephone Jack

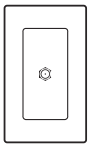

Cable TV Jack

Ports



6-Port Frame

Standard Multigang Wallplates

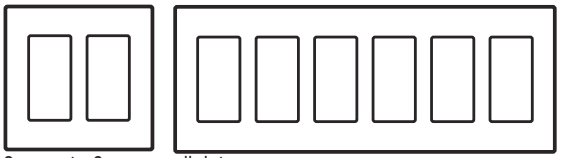

2-gang to 6-gang wallplates

SPECIFICATION SERIES STANDARD FEATURES

- Square Law Dimming
- Power-failure memory
- Electrostatic discharge tested
- RFI suppression
- Captive linear slider
- Precise color matching
- Mechanical air-gap switch to disconnect load power

Lutron controls are rated at 120 V~, 60 Hz unless otherwise noted.

JOB NAME	AREA CONTROLLED
LOCATION	JOB NUMBER
TITLE	PAGE NO.

DIMMERS

Description	Maximum Capacity [1,6]	Model #
Incandescent		
Preset Dimmers with Nightlight		
Single-pole	600 W	DV-600P-
Single-pole	1000 W	DV-10P-
3-way	600 W	DV-603P-
3-way	1000 W	DV-103P-

Note: The nightlight is visible best on the lighter colors. For 3-way and 4-way switching, use with Claro switches or other mechanical switches.

Electronic Low-Voltage		
Preset Dimmers with Nightlight		
Single-pole	300 W	DVELV-300P-
3-way	300 W	DVELV-303P-

Note: Requires neutral wire connection. The nightlight is visible best on the lighter colors. For 3-way and 4-way switching, use with Claro switches or other mechanical switches.

Magnetic Low-Voltage		
Preset Dimmers with Nightlight		
Single-pole	600 VA (450 W)[2]	DVLV-600P-
Single-pole	1000 VA (800 W)[2]	DVLV-10P-
3-way	600 VA (450 W)[2]	DVLV-603P-
3-way	1000 VA (800 W)[2]	DVLV-103P-

Note: The nightlight is visible best on the lighter colors. For 3-way and 4-way switching, use with Claro switches or other mechanical switches.

3-Wire LED/Fluorescent Ballast		
Preset Dimmers with Nightlight [4]		
Single-pole/ 3-way	8 A	DVF-103P-
Single-pole/ 3-way, 277 V~	6 A	DVF-103P-277-

Note: Requires neutral wire connection. The nightlight is visible best on the lighter colors. For 3-way and 4-way switching, use with Claro switches or other mechanical switches.

FAN-SPEED CONTROLS

Description	Maximum Capacity [1,6]	Model #
Quiet Controls		
For use with one ceiling paddle fan.		
Preset Fan-Speed Controls [3, 4]		
Single-pole/3-way, 3-speed	1.5 A	DVFSQ-F-
Light Switch/ Fan-Speed Control [4]		
Fan 3-speed with off	1.5 A	DVFSQ-LF-
Single-pole switch:		
Inc./Hal.	2 A	
CFL/LED	1 A	

Note: Does not have soft-glow nightlight.

SWITCHES [4]

General Purpose Switching of all Sources and Motor Loads		
Single-pole, 120/277 V~	15 A	CA-1PS-
3-way, 120/277 V~	15 A	CA-3PS-
4-way, 120/277 V~	15 A	CA-4PS-

ACCESSORIES

Receptacles		
Receptacle [4]		
125 V~	15 A	CAR-15-
125 V~	20 A	CAR-20-
GFCI Receptacle [4]		
125 V~	15 A	CAR-15-GFST-
125 V~	20 A	CAR-20-GFST-
Telephone and Cable Television Jacks		

A physical barrier (partition) must exist when ganging with line-voltage products

Single Telephone Jack [5]		
6-conductor, RJ11		CA-PJ-

Note: Also accepts most 4-conductor plugs.

Cable TV Jack [4, 5]		
F-STYLE		
75 Ω, coaxial cable jack		CA-CJ-

1 For capacities in multigang installations see **Derating/Maximum Capacity** on pg. 4

2 Actual lamp wattages.

3 For 3-way and 4-way switching, use with Claro switches or other mechanical switches.

4 No derating required if ganged.

5 A physical barrier (partition) must exist when ganging with line-voltage products.

6 For minimum load requirements see **Minimum Load Requirements** on pg. 4

Description	Rating	Model #

ACCESSORIES

Field Customizable Multi-Port Frame

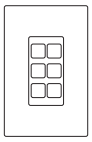

6-Port Frame	Shipped with 6 blanks *Shown with blanks*	CA-6PF-▭

Product above: For use with Lutron connectors shown below. Also compatible with Hubble Xcelerator and snap-fit connectors.

Connectors

For use with 6-port frame (CA-6PF-). Each connector fills one port.

Phone Jack	6-conductor, RJ11, Category 3	CON-1P-C3-WH
Phone Jack	8-conductor, RJ45, Category 5e	CON-1P-C5E-WH
Phone Jack	8-conductor, RJ45, Category 6	CON-1P-C6-WH
Fiber Jack	MT-RJ Feed-Through	CON-1F-MTRJ-WH
Fiber Jack	SC Simplex	CON-1F-SC-WH
Fiber Jack	LC Non-Flush Mount	CON-1F-LC-WH
Fiber Jack	ST Style	CON-1F-ST-WH
Cable Jack	F-Style, 75 Ω Coaxial cable	CON-1C-WH
BNC Jack	BNC connector	CON-1B-WH

Connectors available in white (WH) only. For information about additional colors contact Lutron Customer Service.

Description	Model #

STANDARD WALLPLATES



1-Gang
2.94 in (75 mm) W x 4.69 in (119 mm) H x
0.30 in (7.6 mm) D CW-1-



2-Gang
4.75 in (121 mm) W x 4.69 in (119 mm) H x
0.30 in (7.6 mm) D CW-2-

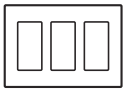

3-Gang
6.56 in (167 mm) W x 4.69 in (119 mm) H x
0.30 in (7.6 mm) D CW-3-

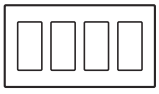

4-Gang
8.37 in (213 mm) W x 4.69 in (119 mm) H x
0.30 in (7.6 mm) D CW-4-

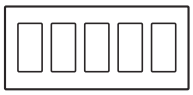

5-Gang
10.18 in (259 mm) W x 4.69 in (119 mm) H x
0.30 in (7.6 mm) D CW-5-

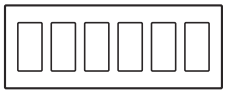

6-Gang
12.00 in (305 mm) W x 4.69in (119 mm) H x
0.30 in (7.6 mm) D CW-6-

STANDARD COLORS/FINISHES

Gloss Finishes

Add color/finish suffix to model number to order.
Example: DV-600P-**SW**

SW	Snow	MN	Midnight
TP	Taupe	BI	Biscuit
ES	Eggshell	PD	Palladiom
HT	Hot	MR	Merlot
PL	Plum	SI	Sienna
TC	Terracotta	BG	Bluestone
GB	Green Briar	GS	Goldstone
MS	Mocha Stone	ST	Stone
DS	Desert Stone	LS	Limestone

For the latest color offerings please see our website:
http://www.lutron.com/satincolors

DERATING/MAXIMUM CAPACITY

	 No side sections removed (Full Capacity)	 One side section removed (End Units)	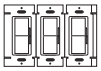 Two side sections removed (Middle Unit)
Incandescent Dimmers			
	600 W 1000 W	500 W 800 W	400 W 650 W
Electronic Low-Voltage			
	300 W	250 W	200 W
Magnetic Low-Voltage			
	600 VA (450 W[1]) 1000 VA (800 W[1])	500 VA (375 W[1]) 800 VA (650 W[1])	400 VA (300 W[1]) 650 VA (500 W[1])
Fluorescent			
Hi-lume/Eco-10 (ECO-Series)	20 ballasts/ 8 A	No derating required	
Fan-Speed Controls			
	1.5 A	No derating required	

1 Actual lamp wattage.

MINIMUM LOAD REQUIREMENTS

Incandescent/Magnetic Low-Voltage	
	40 W
Electronic Low-Voltage	
	5 W
Fluorescent	
Hi-lume/Eco-10 (ECO-Series)	1 ballast
Fan-Speed Controls	
	.33 A (40 W)

WIRING DIAGRAMS

Wiring Diagram 1
Single-Pole Wiring — **Model #**

DV-600P-
DV-10P-
DVLV-600P-
DVLV-10P-
CA-1PS-

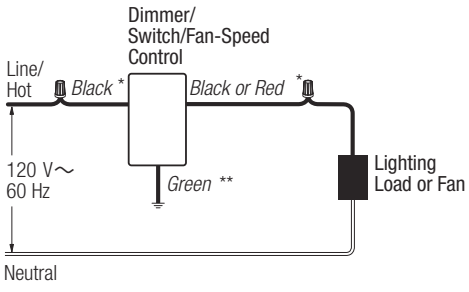

* or Brass screw terminal
** or Green screw terminal

Wiring Diagram 2
Single-Pole Wiring of 3-Way Control — **Model #**

DVFSQ-F-
DVLV-103P-
DVLV-603P-
DV-103P-
DV-603P-

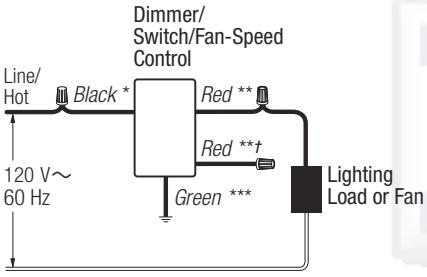

* or Copper/Black screw terminal
** or Brass screw terminal
*** or Green screw terminal
† or Red/White stripe (cap off)

Wiring Diagram 3
Single-Pole Wiring — **Model #**

DVELV-300P-

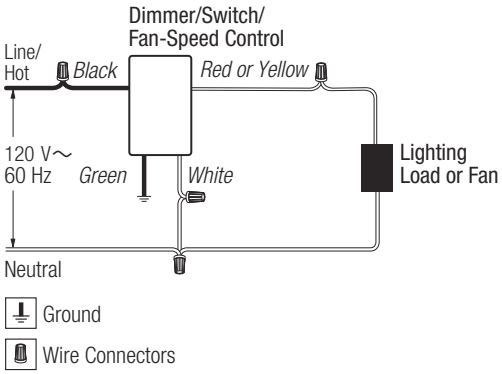

Wiring Diagram 4
3-Way Wiring — **Model #**

DVELV-303P-
CA-3PS-

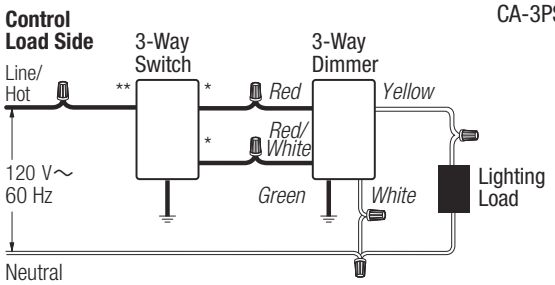

* or Copper/Black screw terminal
** or Brass/Gold screw terminal

Note: 3-way switch must be wired on the line side of the dimmer.

Wiring Diagram 5
3-Way Used as Single-Pole — **Model #**

DVELV-303P-

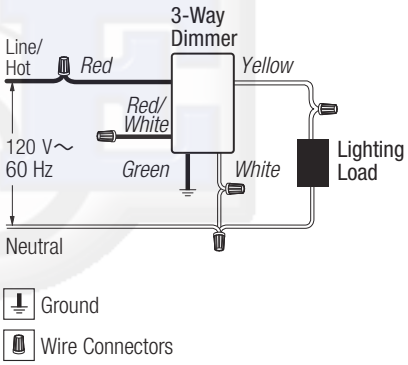

WIRING DIAGRAMS

Wiring Diagram 6
3-Way Wiring

Model #

DV-603P-
DV-103P-
DVLV-603P-
DVLV-103P-
DVFSQ-F-
CA-3PS-

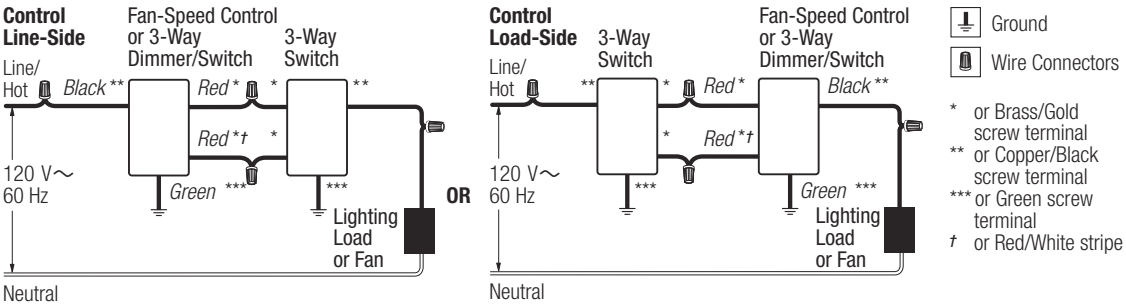

Wiring Diagram 7
4-Way Wiring

Model #

DV-603P-
DV-103P-
DVLV-603P-
DVLV-103P-
DVFSQ-F-
CA-3PS-
CA-4PS-

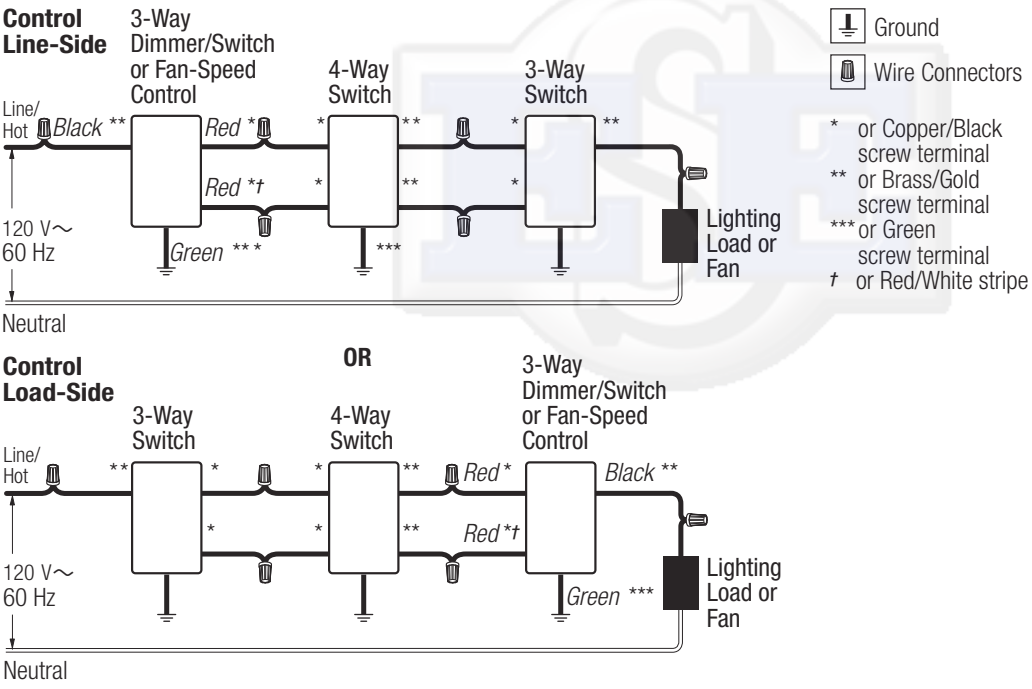

WIRING DIAGRAMS

Wiring Diagram 8
Single-Pole Wiring of a 3-Way Control

Model #

DVF-103P-
DVF-103P-277-

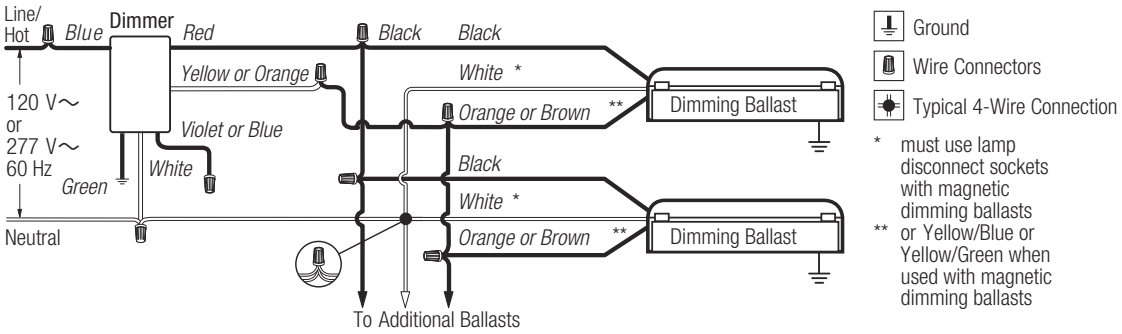

Wiring Diagram 9
3-Way Wiring

Model #

DVF-103P-
DVF-103P-277-
CA-3PS-

Control Load-Side

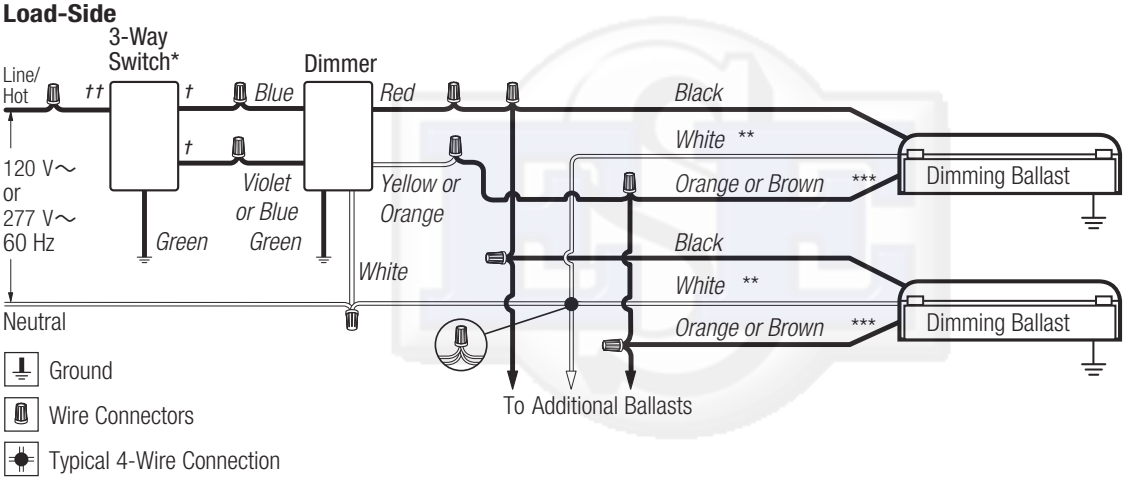

* 3-Way switch must be wired on line side of dimmer
** must use lamp disconnect sockets with magnetic dimming ballasts
*** or Yellow/Blue or Yellow/Green when used with magnetic dimming ballasts
† or Copper/Black screw terminal
†† or Brass/Gold screw terminal

WIRING DIAGRAMS

Wiring Diagram 10
Cable TV Jack Wiring

Model #

CA-CJ-

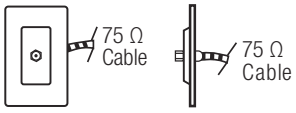

Cable TV Jack

Wiring Diagram 11
Telephone Jack Wiring

Model #

CA-PJ-

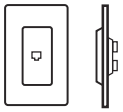

6-Conductor Telephone Jack*

Jack Position	Wire Color
1	*White*
2	*Black*
3	*Red*
4	*Green*
5	*Yellow*
6	*Blue*

* accepts most 4-conductor jacks

Wiring Diagram 12
Receptacle Wiring

Model #

CAR-15-

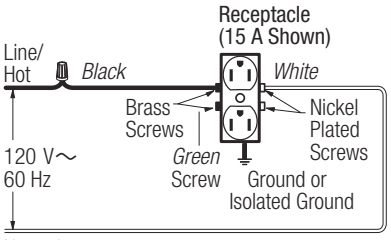

Building Ground (To Metal Box)

Ground

Wire Connectors

Wiring Diagram 13
GFCI Receptacle Wiring

Model #

CAR-15-GFST-

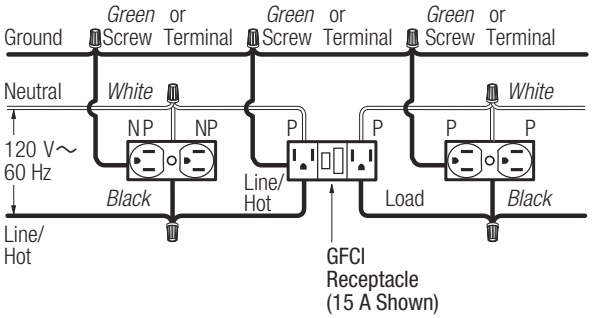

P-Protected
NP-Not Protected

Wire Connectors

Lutron, Lutron, Diva, Claro, Hi-lume, Eco-10, and Tu-Wire are trademarks of Lutron Electronics Co., Inc., registered in the U.S. and other countries.
©2017-2019 Lutron Electronics Co., Inc.