ELLIOTT ELECTRIC SUPPLY
We Deliver...Lower Cost, Quality Products, & Personal Service
2310 N. Stallings Dr.
Nacogdoches, TX 75964-0
Phone: 9365697941
Fax: 9365604685



CU4A EZ PLATE UNIV MNTG COVER BRZ

RAB LIGHTING

Catalog Number	CU4A
Manufacturer	RAB LIGHTING
Description	Weatherproof Cover, 0.55 lb/EA
Weight per unit	0.5500 (lbs/each)
Product Category	Floor Boxes & Accessories

Descriptions

Description	EZ PLATE UNIV MNTG COVER BRZ
Long Description	Outdoor Accessory Weatherproof Universal Cover 4 Hole Bronze
Product Type	Weatherproof Universal Cover 4 Hole Bron
Extra Long Description	RAB CU4A WEATHERPROOF UNIVERSAL COV

Manufacturer Information

Brand	RAB Lighting Inc
GTIN	00019813934464
UPC	885360

Taxonomies, Classifications, and Categories

Category Description	Poles & Accessories
Type	ACCESSORY WALLPACK

Packaging

Carton	1
Package	12
Weight Per Each	0.5500 (lbs/each)

Uses, Certifications, and Standards

Mounting	CEILING

CU4A



Die cast sensor & floodlight mounting plate fits round, rectangular, octagonal, recessed & surface mount boxes. Lower hole offers better sensor mounting position. 3 close-up plugs, thick, weatherproof gaskets, universal mounting bar and Hanging Helper Hook provided.

Color: Bronze

Weight: 0.6 lbs

Project:	Type:
Prepared By:	Date:

Technical Specifications

Compliance

UL Listed:

Suitable for wet locations

Construction

Covers:

Precision die cast aluminum or molded polycarbonate plastic with 1/2" threaded holes

Screws:

10-24 Brass Round Head Phillips/slotted

Gaskets:

1/8" thick closed cell silicone rubber for long lasting seal won't crumple or break

Hole Count:

4 Hole

Other

Replacement Plugs:

Available for round and rectangular covers and boxes

Patents:

Pat. D520,465.

Buy American Act Compliance:

RAB values USA manufacturing! Upon request, RAB may be able to manufacture this product to be compliant with the Buy American Act (BAA). Please contact customer service to request a quote for the product to be made BAA compliant.

Copyright © 2021 RAB Lighting All Rights Reserved Note: Specifications are subject to change at any time without notice

Dimensions

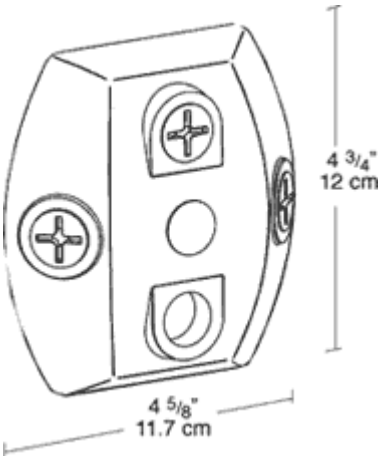

Features

- 1/8" thick weather seal gasket is closed cell foam rubber for long lasting seal that won't break
- Stainless steel screws provided
- Die cast aluminum covers are color matched
- Close-up plugs allow Phillips or slotted screwdrivers for easy installation

Copyright © 2021 RAB Lighting All Rights Reserved Note: Specifications are subject to change at any time without notice