ELLIOTT ELECTRIC SUPPLY
We Deliver...Lower Cost, Quality Products, & Personal Service
2310 N. Stallings Dr.
Nacogdoches, TX 75964-0
Phone: 9365697941
Fax: 9365604685

CERRC LED EXIT WHITE W/RED LETTERING

HUBBELL LIGHTING/CURRENT HLI

Catalog Number	CERRC
Manufacturer	HUBBELL LIGHTING/CURRENT HLI
Description	The Compass emergency exit sign offers quality and value with a compact and attractive LED based emergency exit sign with red letters. The white housing is made of high impact, UL flame rated thermoplastic. Snap together canopy, housing and removable chevrons for quick and easy installation. The CERRC has remote capacity to run up to 4 indoor or outdoor remote lamps. See the Compass CIRS or CIRD indoor matching remote, or CORS or CORD outdoor matching remote. Application in stair-wells, hallways, offices a
Weight per unit	2.0 (lbs/each)
Product Category	Exit Signs

Features

Fixture Type	Emergency Exit
Lamp Type	LED
Material	Thermoplastic
Number Of Lamps	1
Voltage Rating	120/277
Wattage	3.6/4.14
Battery	True

Material, Color, and Finish

Background Color	White
Letter Color	RED
Housing Color	White

Dimensions and Weight

Size	2 in x 12 in x 8 in

ELLIOTT ELECTRIC SUPPLY
We Deliver...Lower Cost, Quality Products, & Personal Service
2310 N. Stallings Dr.
Nacogdoches, TX 75964-0
Phone: 9365697941
Fax: 9365604685

Descriptions

Description	LED EXIT WHITE W/RED LETTERING
Long Description	The Compass emergency exit sign offers quality and value with a compact and attractive LED based emergency exit sign with red letters. The white housing is made of high impact, UL flame rated thermoplastic. Snap together canopy, housing and removable chevrons for quick and easy installation. The CERRC has remote capacity to run up to 4 indoor or outdoor remote lamps. See the Compass CIRS or CIRD indoor matching remote, or CORS or CORD outdoor matching remote. Application in stair-wells, hallways, offices a
Product Type	Exit Red LTR Unv Face Nicad Remote Cap
Special Features	N/A
Extra Long Description	DUAL CERRC EXIT RED LTR UNV FACE NI

Manufacturer Information

Brand	COMPASS DUAL-LITE
GTIN	00856143001462
Manufacturers Part Number	CERRC
UPC	785988

Taxonomies, Classifications, and Categories

Category Description	Emergency & Exit Lighting
Type	Emergency Exit

Packaging

Carton	1
Weight Per Each	2.0 (lbs/each)

Uses, Certifications, and Standards

Application	Commercial applications;Conditioned Space;Damp location;Hallways;Offices;Retail;Stair-wells
Mounting	Wall or ceiling mount
Environmental Conditions	Damp Location
Standard	UL924 Listed for Damp Location

COMPASS®

CE

LED EMERGENCY EXIT

DATE: LOCATION:

TYPE: PROJECT:

CATALOG #:

tradeSELECT®



FEATURES

- LED life-cycle exceeding 10 years
- Red or Green field selectable exit models
- AC or Emergency models
- Molded-in template for wall mounting, canopy included for ceiling or end mounting
- Dual-voltage 120 or 277V AC input
- Includes long-life Nickel Cadmium (NiCad) or Nickel Metal Hydride (NiMh) for UL recognized 90 minute emergency lighting
- Remote capacity or extended runtime option
- Damp Location Listed 20°C to 30°C (68°F to 86°F)

UL924 TITLE 20

SPECIFICATIONS

CONSTRUCTION

- The white or black housing is made of high impact UL flame rated thermoplastic with UV protection
- Universal single or double face

INSTALLATION

- Snap together canopy, housing and covers with removable chevrons for quick and easy installation

ELECTRICAL

- The remote capacity option will run 4 CIR/COR single remote lamp-heads or 2 double CIR/COR remote
- Also available with self-test/self-diagnostics to monitor battery/charger failure, battery disconnect and lamp failure

CERTIFICATIONS

- UL924 Listed for Damp Location
- NFPA 101 and NFPA 70
- OSHA
- CEC T20 Compliant

SELF-DIAGNOSTIC FEATURES

- Fault identification for battery, charger, LED integral lamps and remotes
- Self-Testing monthly and annual for 90 minutes
- Manual Testing for 30 second, 15 minutes and 90 minutes

WARRANTY

- 2 year full unit warranty

ORDERING GUIDE

	Catalog Number	Description
	CARG	White Thermoplastic Exit, Universal Face, Red or Green LED AC Only Exit, Damp Listed 10° to 40°C
	CARGB	Black Thermoplastic Exit, Universal Face, Red or Green LED AC Only Exit, Damp Listed 10° to 40°C
	CERG	White Thermoplastic Exit, Universal Face, Red or Green LED Emergency Exit, NiCad Battery, CEC T20 Compliant, Damp Listed 10° to 40°C
	CERGB	Black Thermoplastic Exit, Universal Face, Red or Green LED Emergency Exit, NiCad Battery, CEC T20 Compliant, Damp Listed 10° to 40°C
	CAR	White Thermoplastic Exit, Universal Face, Red LED AC Only Exit
	CAG	White Thermoplastic Exit, Universal Face, Green LED AC Only Exit
	CARB	Black Thermoplastic Exit, Universal Face, Red LED AC Only Exit
	CAGB	Black Thermoplastic Exit, Universal Face, Green LED AC Only Exit
	CER	White Thermoplastic Exit, Universal Face, Red LED Emergency Exit, NiCad Battery, CEC T20 Compliant
	CERB	Black Thermoplastic Exit, Universal Face, Red LED Emergency Exit, NiCad Battery, CEC T20 Compliant
	CEG	White Thermoplastic Exit, Universal Face, Green LED Emergency Exit, NiCad Battery, CEC T20 Compliant
	CEGB	Black Thermoplastic Exit, Universal Face, Green LED Emergency Exit, NiCad Battery, CEC T20 Compliant
	CERRC	White Thermoplastic Exit, Universal Face, Red LED Emergency Exit, Remote Capacity, NiMh Battery, CEC T20 Compliant
	CERRCB	Black Thermoplastic Exit, Universal Face, Red LED Emergency Exit, Remote Capacity, NiMh Battery, CEC T20 Compliant
	CEGRC	White Thermoplastic Exit, Universal Face, Green LED Emergency Exit, Remote Capacity, NiMh Battery, CEC T20 Compliant
	CERSD	White Thermoplastic Exit, Universal Face, Red LED Emergency Exit, Self-Test/Self-Diagnostics, NiCad Battery, CEC T20 Compliant
	CEGSD	White Thermoplastic Exit, Universal Face, Green LED Emergency Exit, Self-Test/Self-Diagnostics, NiCad Battery, CEC T20 Compliant

Accessories (Order Separately)	
WGEL Wireguard	8"H x 20"W x 8" D
CIR Series	Matching LED Indoor Remote Heads
COR Series	Matching LED Outdoor Remote Heads

Note: Remote Capacity Exit will only power Compass Indoor and Outdoor Remote (CIR and COR Series)

© 2022 HLI Solutions, Inc. All rights reserved. Information and specifications subject to change without notice. All values are design or typical values when measured under laboratory conditions.

COMPASS®

CE

LED EMERGENCY EXIT

DATE: LOCATION:

TYPE: PROJECT:

CATALOG #:

DIMENSIONS

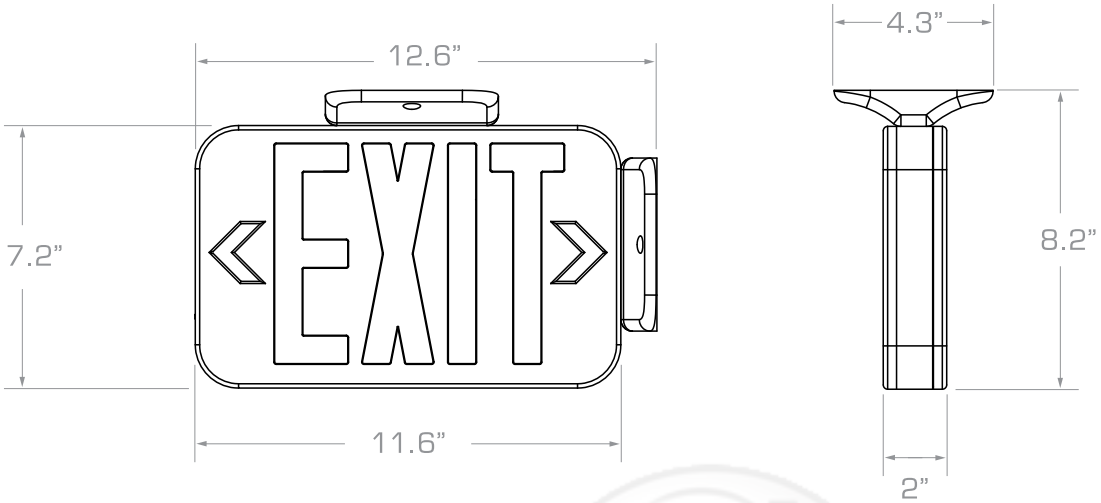

Single Carton Weight	2 lbs.
Master Carton Quantity	6 each

ENERGY CONSUMPTION

	120VAC	277VAC
CARG	2.8W	2.8W
CAR	1.78W	1.88W
CAG	1.52W	1.48W
CERG	3.4W	3.5W
CER	1.78W	1.88 W
CEG	1.49W	1.57 W
CERRC	3.60W	4.14 W
CEGRC	3.28W	3.81 W

ACCESSORIES



CIRS CIRD C0RD C0RS

© 2022 HLI Solutions, Inc. All rights reserved. Information and specifications subject to change without notice. All values are design or typical values when measured under laboratory conditions.