ELLIOTT ELECTRIC SUPPLY
We Deliver...Lower Cost, Quality Products, & Personal Service
2310 N. Stallings Dr.
Nacogdoches, TX 75964-0
Phone: 9365697941
Fax: 9365604685



CAP212 2-1/2" PVC END CAP

CANTEX,INC

Catalog Number	CAP212
Manufacturer	CANTEX,INC
Description	CANTEX 5140038 is a 2-1/2 in. End Cap designed top cap off PVC conduit either temporarily or permanently using PVC solvent cement
Weight per unit	0.3350 (lbs/each)
Product Category	PVC Conduit Fittings & Accy

Features

Material	PVC
Outside Diameter	2.875

Material, Color, and Finish

Color	Gray

Dimensions and Weight

Depth	2
Length	2.875
Size	2 1/2
Width	2.875

Descriptions

Description	2-1/2" PVC END CAP
Features	CANTEX 5140038 is a 2-1/2 in. End Cap designed top cap off PVC conduit either temporarily or permanently using PVC solvent cement
Long Description	CANTEX 5140038 is a 2-1/2 in. End Cap designed top cap off PVC conduit either temporarily or permanently using PVC solvent cement
Product Type	2 1/2 Ul End Caps
Special Features	For use with Schedule 40 & 80 and EB & DB conduit
Extra Long Description	CTX 5140038 2 1/2 UL END CAPS

Manufacturer Information

Brand	PVC & Accessories
	CANTEX INC.
GTIN	00088700527683
Manufacturers Part Number	5140038
UPC	881780

Taxonomies, Classifications, and Categories

Category Description	COUPLINGS, ADAPTERS, REDUCERS, BUSHINGS, & CAPS
Type	END CAP

ELLIOTT ELECTRIC SUPPLY
We Deliver...Lower Cost, Quality Products, & Personal Service
2310 N. Stallings Dr.
Nacogdoches, TX 75964-0
Phone: 9365697941
Fax: 9365604685

Trade Size

Trade Size	2 1/2

Packaging

Carton	1
Package	25
Weight Per Each	0.3350 (lbs/each)

Uses, Certifications, and Standards

Application	End Cap
Standard	UL Listed

PVC End Caps

CANTEX

End Caps

End Caps are designed to cap off PVC conduit either temporarily or permanently using PVC solvent cement.

- Suitable for indoor or outdoor use
- Durable non-conductive PVC will not rust or corrode
- For use with Schedule 40 & 80 and EB & DB applications
- UL and CSA listed
- Made in USA

1/2" through 4" have dome top



5" and 6" have flat top



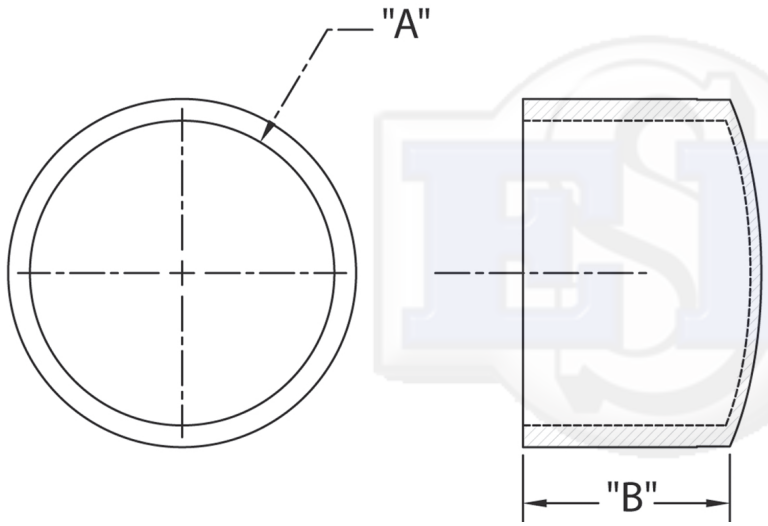

Meets NEMA TC3 Requirements
Made of Rigid PVC

Part Number	Trade Size	Carton Qty.	"A"	"B"
5140031	1/2	100	.875	.875
5140032	3/4	100	1.063	1.063
5140033	1	50	1.375	1.250
5140034	1-1/4	25	1.688	1.313
5140035	1-1/2	25	1.938	1.563
5140037	2	50	2.375	1.625
5140038	2-1/2	25	2.875	2.000
5140039	3	25	3.563	2.375
5140036	3-1/2	25	4.000	2.313
5140040	4	25	4.500	2.375
5140041	5	25	5.563	2.500
5140042	6	10	6.625	3.000

Dimensions are nominal



SINGLE SOURCE FOR PVC ELECTRICAL

CANTEX offers an all-inclusive line of Schedule 40 & Schedule 80 PVC electrical fittings and accessories. With several decades of experience manufacturing PVC fittings and accessories, you can trust CANTEX to provide quality products.

All of our PVC fittings are easy-to-install and offer non-conductivity, high impact, tensile strength, industry certifications, and resistance to a wide range of chemicals, acids, and salt. Our schedule 40 & 80 fittings and accessories connect seamlessly with other standard schedule 40 & 80 products making it easy to convert entire electrical infrastructures to PVC. See our full line of PVC electrical products at www.cantexinc.com.