ELLIOTT ELECTRIC SUPPLY
We Deliver...Lower Cost, Quality Products, & Personal Service
2310 N. Stallings Dr.
Nacogdoches, TX 75964-0
Phone: 9365697941
Fax: 9365604685



C100A 1 HOLE WTHPRF ROUND COVER BRONZE

RAB LIGHTING

Catalog Number	C100A
Manufacturer	RAB LIGHTING
Description	Outdoor Accessory Weatherproof Cover Round 1 Hole Bronze
Weight per unit	0.2000 (lbs/each)
Product Category	Bar Hangers & Outlet Box Accy.

Descriptions

Description	1 HOLE WTHPRF ROUND COVER BRONZE
Long Description	Outdoor Accessory Weatherproof Cover Round 1 Hole Bronze
Product Type	Weatherproof Cover Round 1 Hole Bronze
Extra Long Description	RAB C100A WEATHERPROOF COVER ROUND

Manufacturer Information

Brand	RAB Lighting Inc
	Rab Lighting
GTIN	00019813934051
Manufacturers Part Number	C100A
UPC	885360

Taxonomies, Classifications, and Categories

Category Description	Fluorescent Fixtures & Accessories
Type	ACCESSORY WALLPACK

Packaging

Carton	1
Weight Per Each	0.2000 (lbs/each)

C100A



Die cast round covers with one or three 1/2" holes. Fit 4" round boxes. Supplied with thick foam rubber gasket and two #10-24 stainless steel screws. 3 hole cover comes with one die cast 1/2" close-up plug.

Color: Bronze

Weight: 0.2 lbs

Project:	Type:
Prepared By:	Date:

Technical Specifications

Compliance

UL Listed:

Suitable for wet locations

Construction

Covers:

Precision die cast aluminum round covers

Screws:

10-24 Brass Round Head Phillips/slotted

Gaskets:

1/8" thick closed cell silicone rubber for long lasting seal won't crumple or break

Hole Count:

1 Hole

Other

Replacement Plugs:

Available for round and rectangular covers and boxes

Buy American Act Compliance:

RAB values USA manufacturing! Upon request, RAB may be able to manufacture this product to be compliant with the Buy American Act (BAA). Please contact customer service to request a quote for the product to be made BAA compliant.

Copyright © 2021 RAB Lighting All Rights Reserved Note: Specifications are subject to change at any time without notice

C100A

Dimensions

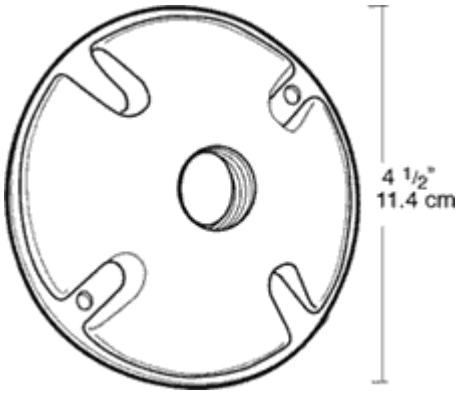

Features

- 1/8" thick weather seal gasket is closed cell silicone rubber for long lasting seal that won't break
- Stainless steel screws provided
- Die cast aluminum covers are color matched
- Close-up plugs allow Phillips or slotted screwdrivers for easy installation

Copyright © 2021 RAB Lighting All Rights Reserved Note: Specifications are subject to change at any time without notice