ELLIOTT ELECTRIC SUPPLY
We Deliver...Lower Cost, Quality Products, & Personal Service
2310 N. Stallings Dr.
Nacogdoches, TX 75964-0
Phone: 9365697941
Fax: 9365604685



BFQHSG HOUSING FOR BFQ80

AIR KING/LASKO

Catalog Number	BFQHSG
Manufacturer	AIR KING/LASKO
Description	Contractor Housing, 4 in Duct Size, BFQ110MBG;BFQ140MBG Fan;BFQ50T;BFQ75T;BFQ90MBG;Grill and Motor For Use With, Lock In Bracket Includes, Polymeric Material, 4 in Opening Diameter, 8-1/2 in Overall Depth, 3-7/8 in Overall Height, 9-1/8 in Overall Width, 4 PK Package Quantity
Weight per unit	7.5 (lbs/each)
Product Category	Exhaust Fans & Components

Features

Duct Size	798
Housing Dimensions	8.5 x 9.125 x 4.75 in

Descriptions

Description	HOUSING FOR BFQ80
Long Description	BFQ Contractor Pack Housing
Product Type	Contractor Pack HSG (Use W/BFQ Models)
Extra Long Description	AIR BFQHSG High Performance Contrac

Manufacturer Information

Brand	Air King
GTIN	00083162903105
UPC	078817

Taxonomies, Classifications, and Categories

Category Description	FANS & HEATERS
Type	Contractor Pack Housing

Packaging

Carton	1
Package	4
Weight Per Each	7.5 (lbs/each)

Uses, Certifications, and Standards

Application	Ventilation

SPECIFICATIONS

BFQHSG

EXHAUST FAN HOUSING

Exhaust Fan Housing

- **Fan Housing**
  PC/ABS polymeric, dimensions 8 1/2" x 9 1/8" x 3 7/8".

- **Duct Collar**
  Plastic collar for 4" duct connection, comes complete with built in non-metallic back draft damper for quiet operation.

- **Unit Mounting**
  Designed to mount in ceilings with at least 6" of clearance. The unit is mounted directly to the joist using a separate lock-in bracket (included with unit). The housing will mount through drywall thickness up to 3/4", with a rough-in opening of 8 1/2" x 9 1/8".

  Acceptable for use over tub or shower when installed in a GFCI protected branch circuit.

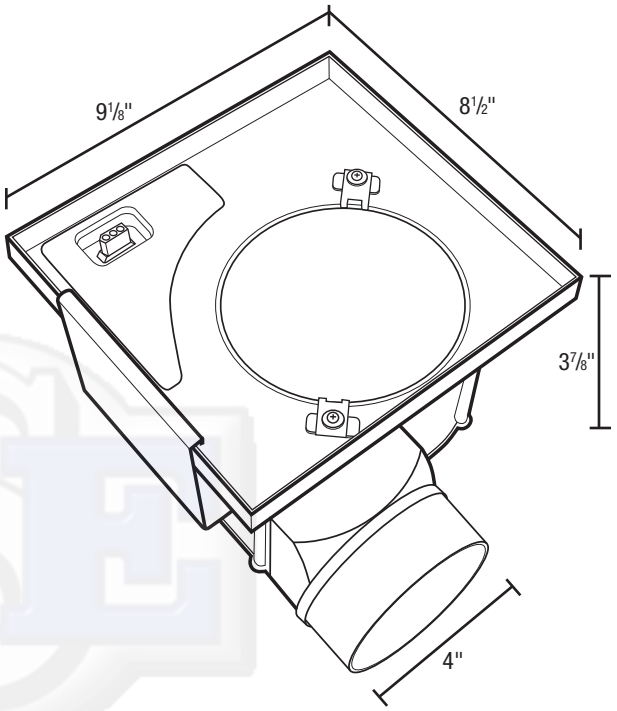

- **Available Trim Kits**
  BFQ50T: 50 CFM, ENERGY STAR® certified
  BFQ75T: 75 CFM, ENERGY STAR® certified
  BFQ80T: 80 CFM
  BFQ90MBG: 90 CFM
  BFQ110MBG: 100 CFM
  BFQ140MBG: 120 CFM

- **Shipping Info**
  Number of Housings in Box: 4
  UPC Code: 083162903105

PROJECT		ARCHITECT	
LOCATION		ENGINEER	
CONTRACTOR		SUBMITTED BY	DATE

FAN NUMBER	MODEL NUMBER	CFM	IN W.C.	RPM	WATTS	AMPS	SONES	QTY	OPTIONAL EQUIPMENT & REMARKS

U.S.: 820 Lincoln Avenue
West Chester, Pennsylvania 19380-4466
Tel: (610) 692-7400 • 877-304-3785
Fax: (610) 696-8048

Specifications subject to change without notice.