ELLIOTT ELECTRIC SUPPLY
We Deliver...Lower Cost, Quality Products, & Personal Service
2310 N. Stallings Dr.
Nacogdoches, TX 75964-0
Phone: 9365697941
Fax: 9365604685



B249B 2G 48.2 CU IN ZIP BOX W/F

ABB INSTALLATION PRODUCTS, INC

Catalog Number	B249B
Manufacturer	ABB INSTALLATION PRODUCTS, INC
Description	Double Gang Multipurpose Electrical Box, Volume 48 Cubic Inches, Length 3-5/16 Inches, Width 4-1/32 Inches, Depth 3-13/16 Inches, Color Blue, Material PVC, Mounting Means Side Flange, Internal Screws
Weight per unit	0.3300 (lbs/each)
Product Category	Non-Metallic

Features

Knockouts	true

Material, Color, and Finish

Color	Blue

Descriptions

Description	2G 48.2 CU IN ZIP BOX W/F
Features	Carlon□s most versatile non-metallic box ever. Double-gang designs that work on wood or steel studs; in new or old work; with simple, fast installation; vertical or horizontal
Long Description	Double Gang Multipurpose Electrical Box, Volume 48 Cubic Inches, Length 3-5/16 Inches, Width 4-1/32 Inches, Depth 3-13/16 Inches, Color Blue, Material PVC, Mounting Means Side Flange, Internal Screws
Product Type	2G 48.2 Cu In Zip Box W/Flange
Special Features	Accepts wire sizes: 23/14, 20/12, 18/10
Extra Long Description	TB B249B 2G 48.2 CU IN ZIP BOX W/FL

Manufacturer Information

Brand	ABB - Installation Products
	Carlon
GTIN	00034481020387
Manufacturers Part Number	B249B
UPC	786210

Taxonomies, Classifications, and Categories

Category Description	PLASTIC BOXES

Packaging

Carton	12
Weight Per Each	0.3300 (lbs/each)

Uses, Certifications, and Standards

Standard	UL E11461

Carlon®

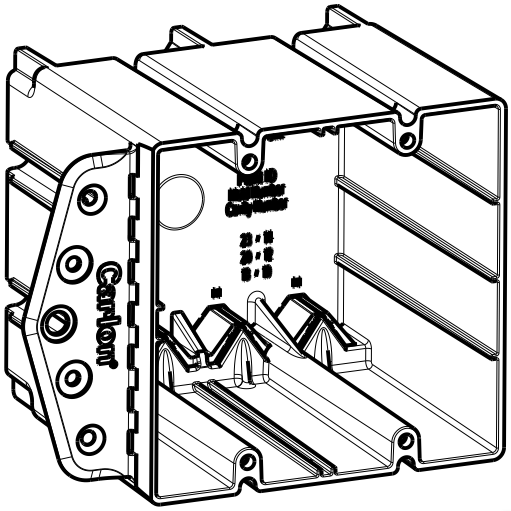

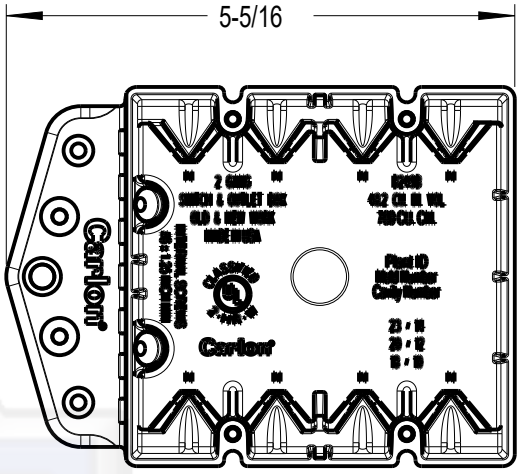

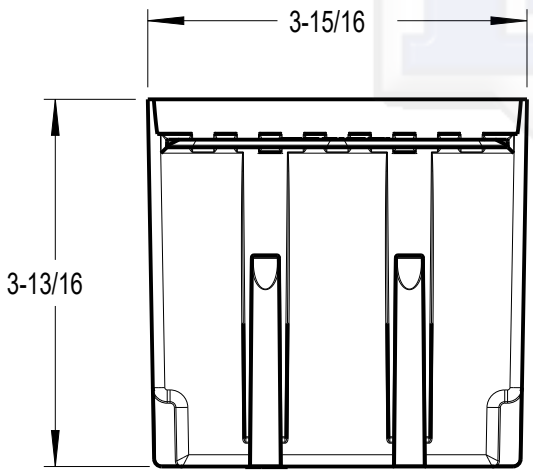

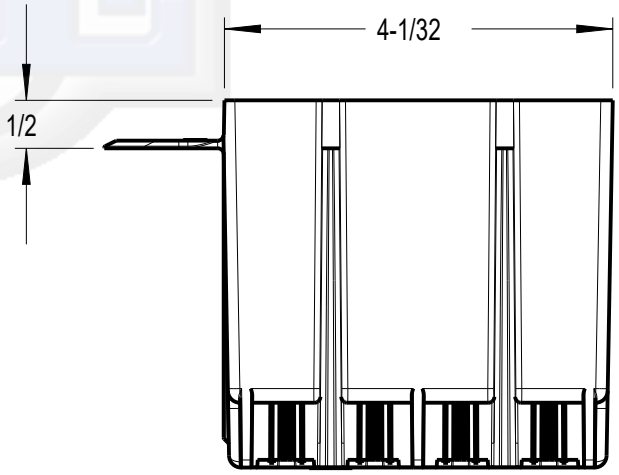

NOTES:
1. MATERIAL: BLUE PVC

GENERAL NOTES				
1. ALL DIMENSIONS ARE FOR REFERENCE ONLY. 2. DIMENSIONS IN BRACKETS [ ] ARE IN METRIC UNITS.	www.tnb.com			Thomas&Betts A Member of the ABB Group
REVISIONS	DESCRIPTION: 2 GANG NON-METALLIC OUTLET BOX B249B			
0 SEE ERN ( ) FOR APPROVAL SIGNATURES & RELEASE DATE. PROJECT NO:	ORIGINAL PROJECT NO / (ERN NO) 001D001158 / (2018584)	SHEET NO: 1 OF 1	REV. NO: 0	DRAWING NO: WSD-001895

THIS DRAWING IS INTENDED FOR DESCRIPTIVE PURPOSES ONLY. AND THE RIGHT IS RESERVED TO DEVIATE FROM ANY OF THE DETAILS SHOWN HEREON.
COPYRIGHT THOMAS & BETTS CORPORATION. ALL RIGHTS RESERVED. PROPRIETARY AND CONFIDENTIAL.