Cable support systems

B-Line by EATON

Energizing a world that demands more.

Discover today's Eaton.

Powering business worldwide

As a global power management company, we help customers worldwide manage the power needed for buildings, aircraft, trucks, cars, machinery and businesses.

Eaton's innovative technologies help customers manage electrical, hydraulic and mechanical power more reliably, efficiently, safely and sustainably.

EATON

Powering Business Worldwide

We deliver:

- **Electrical solutions** that use less energy, improve power reliability and make the places we live and work safer and more comfortable
- **Hydraulic and electrical solutions** that enable machines to deliver more productivity without wasting power
- **Aerospace solutions** that make aircraft lighter, safer and less costly to operate, and help airports operate more efficiently
- **Vehicle drivetrain and powertrain solutions** that deliver more power to cars, trucks and buses, while reducing fuel consumption and emissions

We provide integrated solutions that help make energy, in all its forms, more practical and accessible.

With 2013 sales of $22 billion, Eaton has approximately 100,000 employees around the world and sells products in more than 175 countries.

Eaton's electrical business

Eaton is a global leader with expertise in:

- Power distribution and circuit protection
- Backup power protection
- Solutions for harsh and hazardous environments
- Lighting and security
- Structural solutions and wiring devices
- Control and automation
- Engineering services

Eaton is positioned through its global solutions to answer today's most critical electrical power management challenges. With 100 years of electrical experience behind us, we're energized by the challenge of powering up a world that demands twice as much energy as today. We're anticipating needs, engineering products and creating solutions to energize our markets today and in the future.

We are dedicated to ensuring that reliable, efficient and safe power is available when it's needed most.

Eaton.com

Introduction

Eaton's B-Line Business operates out of a 50,000 square foot manufacturing and sales facility in Dammam, Saudi Arabia. At the time of the opening, the facility was reviewed by ARAMCO, which passed the Saudi oil company's detailed quality management assessments and Saudisation provisions. In conjunction with the facility's Aramco- approved status, B-Line has pledged to maintain at least 50% Saudi-employed workforce at the plant, a promise which supports the local job market.

B-Line continues to make investment in the region and in 2014 added roll-forming and additional capacity to the facility.

B-Line offers the region a broad line of cable support products, including aluminum, steel, and fiberglass cable ladder, as well as perforated and solid bottom cable tray. B-Line also provides its specification engineering services locally, providing both pre- and post-sale engineering and technical support to customers throughout the region. B-Line's presence in this area represents a continuation of the company's investment in the global oil and gas industry, adding the GCC countries to its global coverage area beyond offices in Korea, London, Calgary, and Houston.

مقدمة

تشغّل شركة إيتون بي لاين للأعمال مصنعًا تبلغ مساحته 50,000 قدم مربع في مدينة الدمام في المملكة العربية السعودية.

وعند افتتاحه، تمت مراجعة المنشأة من قبل شركة أرامكو، ونجح وفق شروط السعودة الموضوعة من قبل شركة النفط السعودية هذه. وبالترابط مع الموافقة من أرامكو، تعهّدت بي لاين بالإبقاء على نسبة ٥٠٪ من العاملين ليكونوا من السعوديين، وهو وعد يواكب سوق العمل المحلي.

وتواصل شركة بي لاين بالاستثمار في المنطقة حيث أضافت في عام 2014 قدرة تصنيع اللفائف وغيرها في المنشأة.

وتقدم بي لاين للمنطقة مجموعة عريضة من منتجات حوامل الكيابل، بما فيها المصنعة من الألمنيوم، الحديد، والفايبركلاس، وكذلك منتجات الحوامل المرنة المثقبة والصلبة. كما توفر بي لاين خدمات الاستشارات الهندسية محليًا، والخدمات الهندسية قبل وبعد المبيعات وكذا الدعم الفني للعملاء في المنطقة. وبذلك تمثل خطة بي لاين في المنطقة توسعًا لاستثمارات الشركة في صناعة النفط والغاز العالمية، مضيفة دول مجلس التعاون الخليجي إلى مناطق تغطيتها العالمية إلى جانب مكاتبها في كوريا، لندن، كالغاري، وهيوستن.

General Information ..... Inside Cover & i

Introduction GI-1
Table of Contents ..... GI-2 – GI-4
CoSPEC™ Specifier Center GI-5
Structural Steel Savings Information GI-6
Structural Steel Savings Key Product Attributes GI-7
Structural Steel Savings Support Recommendations ..... GI-8 – GI-11
Specifications & Approvals GI-12
Product Overview ..... GI-13 & GI-14

Cable Ladder Selection Process

Selection Process CLS-1
Material & Finish ..... CLS-2 – CLS-4
Corrosion ..... CLS-5 – CLS-6
Environmental Loads, Support Spans ..... CLS-7 – CLS-8
Thermal Contraction and Expansion CLS-9
Deflection CLS-10
Installation Considerations ..... CLS-11 & CLS-12
Load Capacity and Classes ..... CLS-13 & CLS-14

Perforated & Solid Cable Tray

General Information PS-2
Load Capacities & Weights PS-3
Cable Tray Straight Sections ..... PS-4 – PS-7
Cable Tray Accessories
Splice Plates, Blind Ends, Drop-Out, Cover Clamps,
Hold Down Clamps, Bonding Jumper, and Hardware ..... PS-8 – PS-10
Cable Tray Fittings ..... PS-11 – PS-22
Cable Tray Covers - Straight Section & Fitting ..... PS-23 & PS-24

Steel Cable Ladder Series 1

General Information LDS-2
Steel Cable Ladder Series 1 Straight Sections ..... LDS-3 & LDS-4
Steel Cable Ladder Series 1 Accessories
Splice Plates, Box Connectors, Blind Ends, Conduit to Ladder Adaptors,
Clamp/Guides, Ground Clamps, Bonding Jumper, Threaded Rod,
Rod Couplings, Hanger Rod Clamps, Drop-Out, Barriers ..... LDS-5 – LDS-8
Steel Cable Ladder Series 1 Covers & Cover Accessories ..... LDS-9 – LDS-11
Steel Cable Ladder Series 1 Fittings ..... LDS-12 – LDS-20

Slotted Steel Cable Ladder

General Information CL-2
Slotted Steel Cable Ladder Straight Sections ..... CL-3 & CL-4
Slotted Steel Cable Ladder Weights CL-5
Slotted Steel Cable Ladder Accessories
Splice Plates, Tee/Wall Connectors, Bonding Jumpers, Blind Ends,
Ladder Drop-Out, Threaded Rod, Rod Coulplings, Clamp/Guides,
Barriers, Clamp/Guides ..... CL-6 – CL-10
Slotted Steel Cable Ladder Fittings ..... CL-11 – CL-25
Slotted Steel Cable Ladder Covers & Cover Accessories ..... CL-26 – CL-28

Table of Contents

Aluminum Cable Ladder

NEMA 12B Aluminum Cable Ladder General Information AL-2
NEMA 12B Aluminum Cable Ladder Straight Sections AL-3
NEMA 12B Aluminum Cable Ladder Accessories
Splice Plates, Bonding Jumper, Clamp/Guides, Conduit to Ladder Adaptors, Ladder Drop-Out, Blind Ends, Box Connectors, Trapeze Support Kits, Barrier Strips ..... AL-4 – AL-6
NEMA 12B Aluminum Cable Ladder Covers & Accessories ..... AL-7 & AL-8
NEMA 12B Rated Aluminum Specification AL-9
NEMA 12B Rated Aluminum Cable Ladder Fittings ..... AL-10 – AL-21

Aluminum Cable Ladder Series 2, 3, & 4 General Information AL-24
Aluminum Cable Ladder Series 2, 3, & 4 Straight Sections ..... AL-25 – AL-32
Aluminum Cable Ladder Series 2, 3, & 4 Accessories
Splice Plates, Box Connectors, Blind Ends, Conduit to Ladder Adaptors, Ladder Drop-Outs, Barriers, Ground Clamps, Bonding Jumper, Hanger Rod Clamps, Clamp/Guides, Trapeze Kits, Brackets, Hold Down Brackets, and Beam Clamps ..... AL-33 – AL-44
Aluminum Cable Ladder Series 2, 3, & 4 Covers & Cover Accessories ..... AL-45 – AL-47
Cable Cleats AL-47
Aluminum Aluminum Cable Ladder Series 2, 3, & 4 Specification AL-48
Aluminum Cable Ladder Series 2, 3, & 4 Fittings ..... AL-49 – AL-64

Fiberglass Cable Tray & Cable Ladder

Fiberglass Perforated & Solid Cable Tray General Information GRP-2
Fiberglass Cable Tray Straight Sections ..... GRP-3 & GRP-4
Fiberglass Cable Tray Accessories
Splice Plates, Blind End Plates, Barriers, Hold Down Clamps & Accessory Hardware ..... GRP-5 & GRP-6
Fiberglass Cable Tray Fittings ..... GRP-7 – GRP-18
Fiberglass Cable Tray Covers & Cover Accessories ..... GRP-19 & GRP-20

Fiberglass Cable Ladder General Information GRP-22
Fiberglass Cable Ladder Straight Sections ..... GRP-23 – GRP-26
Fiberglass Cable Ladder Accessories
Splice Plates, Blind End Plates, Ladder Drop Out, Clamp/Guides, Hold Down Clamps, Conduit To Ladder Adaptor, Barriers, Resin Seal ..... GRP-27 – GRP-29
Fiberglass Cable Ladder Fittings ..... GRP-30 – GRP-41
Fiberglass Cable Ladder Covers & Cover Accessories ..... GRP-42 & GRP-43
Fiberglass Technical Data
Load Data, Corrosion Guide, Installation Guide ..... GRP-44 – GRP-47

Cable Cleats

Trefoil Cable Cleats CC-2
Single Cable Cleats CC-3
Selecting Cable Cleats ..... CC-4 & CC-5

Strut Support Systems

Introduction BF-2
Technical Data
- Materials, Finishes, Welding ..... BF-3 & BF-4
- Corrosion BF-5
- Design of Strut System ..... BF-6 & BF-7
- Recommended Specification BF-8
- Design Load Data BF-9

General Information BF-10
Channels & Loading ..... BF-11 – BF-18
Hardware
- Channel Nuts, Combo Nut Washer, Buzznut™, Closure Strips, End Caps, Hardware ..... BF-19 – BF-22

Strut Fittings
- Flat Fittings, Angle Fittings, Brackets, Post Bases, Beam Clamps ..... BF-23 – BF-26

Index

Part Number Index ..... IND-1 – IND-23

Miscellaneous

Metric Conversion Charts MIS-1
Bottom Design Options MIS-2

CoSPEC™ Specifier Center

CoSPEC Specifier Center is designed to help you easily SELECT, VIEW and DOWNLOAD B-Line product design content in any one of nearly one hundred non-proprietary and proprietary CAD, BIM, PDMS, and graphics formats, which helps speed the integration of the content into your design project. For more information, visit www.cooperbline.com/cospec.

Features

- Easy integration and configuration
- Comprehensive library of 2D drawings and 3D models for CAD, BIM, PDMS, SP3D, and graphics output
- The most up to date software versions and product data information are always available
- Submittals and specification sheets in PDF format
- Proprietary file format outputs are native to the chosen software

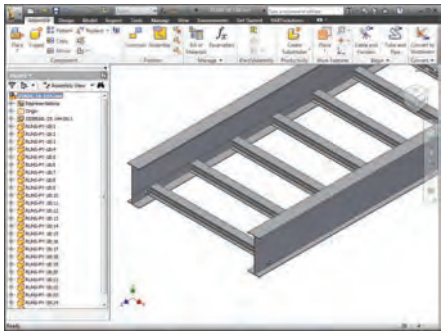

Nearly a Hundred Download Options

- Aveva PDMS and Intergraph SmartPlant SP3D (on select products) content
- Autodesk Revit output available
- Proprietary formats from AutoCAD to SolidWorks to Catia
- Non-proprietary formats like DXF and STEP, and more
- Graphics files in a number of formats including EPS

2D Native

- Allplan 2008
- AutoCAD >=V14
- Cadkey CDL >=V19
- Catia IUA - V4
- HP ME 10 >=V9
- Medusa >=2000i
- Microstation (DGN) >=V8
- SolidEdge >=V17
- VX (Varimetrix) >=V5.0

2D Neutral & Graphics

- BMP (2D & 3D View)
- DWF-ASCII 5.5, Binary 5.5 and Compressed 5.5
- DWG >=V14
- DXF-V12\HPGL-V2
- IGES >=V5.0
- JPEG (2D & 3D Views)
- Metafile 2D-V1, & PS2-V2
- MI >=V8
- PDF Datasheet
- Postscript EPS
- SVG
- TIFF (2D & 3D View)

3D Native

- Autodesk 3D Studio MAX
- Allplan = 2008
- AutoCAD >=V14
- AVEVA PDMS/Marine (Equipment Spec)
- Caddy++ via SAT-V4.2
- Catis >=V5 R8 and IUA-V4
- EMS
- Google SketchUp
- Autodesk Inventor >=R5.3, R10, R11
- Mechanical Desktop >=V5
- Nupas/Cadmatic
- One Space Modeling >=2007
- Pro/E Wildfire >=I
- PRO-Desktop
- Autodesk Revit >= 2009* (coming soon)
- SolidEdge >=V17
- SolidWorks >=2001+
- Think3 >=2006.2
- Tribon M3
- Unigraphics >=NX3
- VX (Varimetrix) >=V5

3D Neutral

- CIP
- DWG >=V14
- DXF V14
- IGES
- JT
- Metafile 3D (PS3)-V2
- Parasolid-Binary V15 and Text V15
- PDF 3D-7.01
- SAT - V2.0 through V6.0
- STEP-AP203, AP215a & AP214b
- STL
- U3D (Universal 3D)
- VRML >=V1.0
- XGL

Select

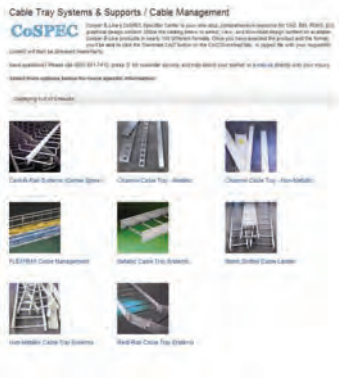

View

Download

Reduce Structural Steel Supports

With B-Line cable ladder systems, you can reduce the number of structural steel supports by as much as 66%, all while meeting or exceeding global industry standards.

Resources

By visiting www.cooperbline.com/sss, you can access our library of resources available that demonstrate the ways a B-Line cable ladder system can help reduce engineering complexity and costs. These resources include:

- **Video:** Five minute video showing our key features and support recommendations
- **Support recommendations:** Submittal drawings showing where supports are recommended to be placed
- **Test reports:** Detailed reports highlighting our products' load testing performance in our engineering laboratories
- **Calculator:** A cost savings calculator that estimates potential savings based on user-entered variables

For Steel & Aluminum Cable Ladder

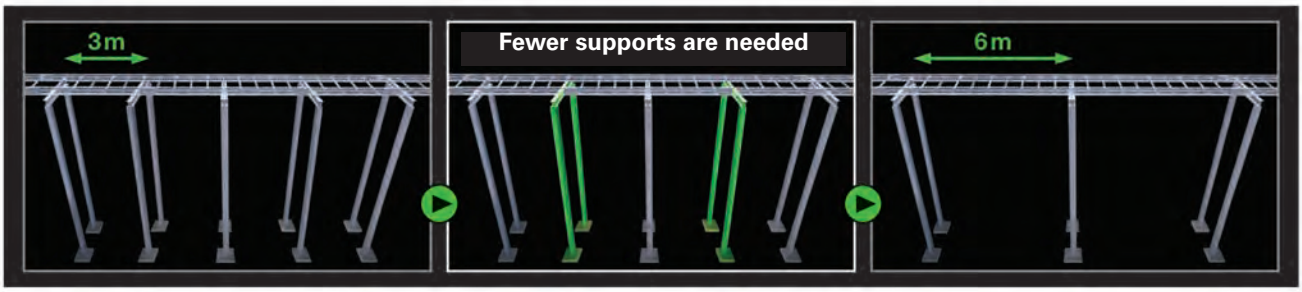

For Aluminum Cable Ladder

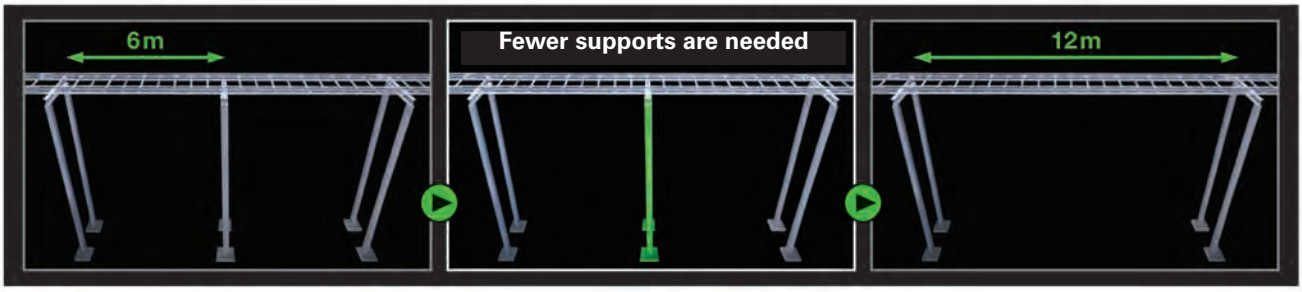

Structural Steel Savings

5 Key Product Attributes

I-Beam Side-Rail Design

I-Beam Design Can Carry up to 2.3 Times More Load than C-Channel

- Maximizes stiffness
- Offers positive rung support
- Enhances clamping options
- Carries load on longer spans, reducing support requirements

Application - Specific Materials

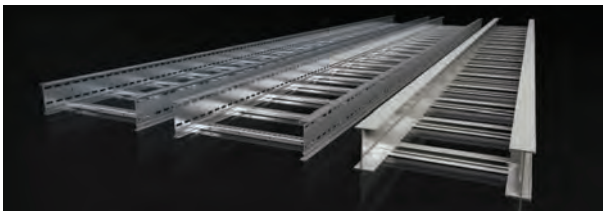

Application Specific Materials Maximize Options

- Hot-dip galvanized steel
- 316 Stainless Steel
- Marine-grade, copper-free aluminum
- Ensures the best material for the application to carry the load over the longest span

Splice Plate Design

Splice Plates Enhance Structural Integrity

- Enhances the structural integrity and strength of the system, reducing support requirements
- UL Classified as an equipment grounding conductor, eliminating bonding jumpers

Application - Specific Specialty Splices

Specialty Splice Plates Allow Load Transfer

- Patent-pending design
- Designed for thermal expansion and contraction
- Structural integration maintains load carrying capacity, reducing support requirements

Fitting Designs

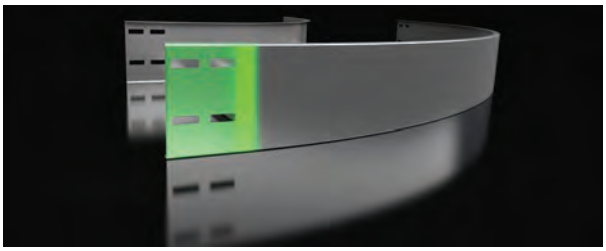

75m or 100mm Tangents

- Industry-leading 75mm to 100mm tangents
- Maximizes strength and load carrying capacity, reducing support requirements

Support Recommendations
Horizontal Bends

NEMA Standard
900mm (36”) Max Radii

- Attached ladder supported within 600mm of splice
- Fittings supported at radius center pont on both sides
- Three total supports recommended per fitting

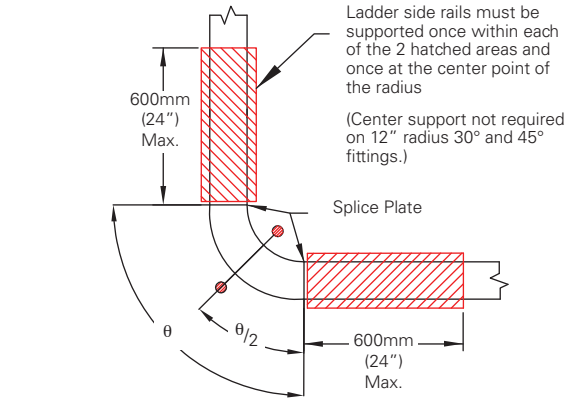

θ = 30°, 45°, 60°, 90°

B-Line Recommendations

Option 1
900mm (36”) Max Radii

- Attached ladder supported up to half span (3000mm max)
- Fittings supported within 30° of radius center point on both sides
- One support recommended per fitting with flexibility for placement and distance on ladder supports

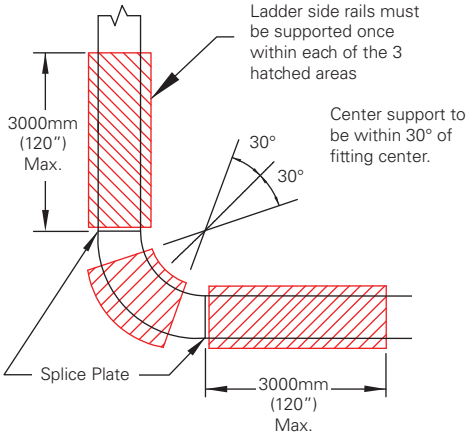

Option 1
900mm (36”) Max Radii

- Attached ladder supported within 600mm of splice
- Fitting support is eliminated
- Two total supports recommended per fitting

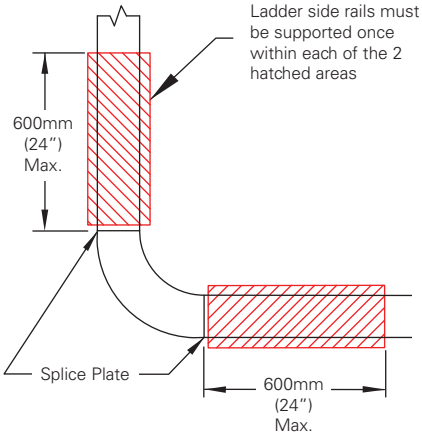

Structural Steel Savings

Support Recommendations Horizontal Tees

NEMA Standard 900mm (36”) Max Radii

- Attached ladder supported within 600mm of splice
- Fittings supported once on each side rail
- Six total supports recommended per fitting

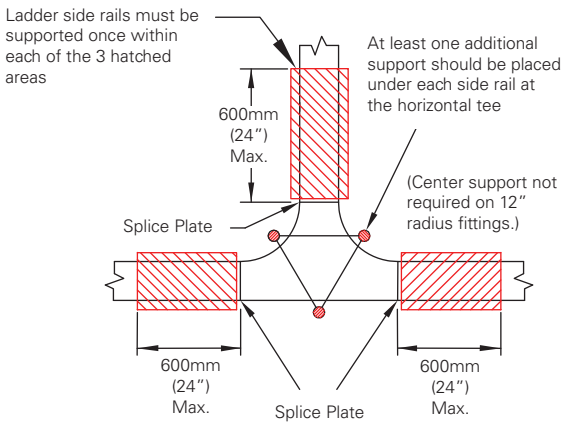

B-Line Recommendations

Option 1 900mm (36”) Max Radii

- Attached ladder supported up to half span (3000mm max)
- Fittings supported twice within defined area
- Two supports recommended per fitting with flexibility for placement and distance on ladder supports

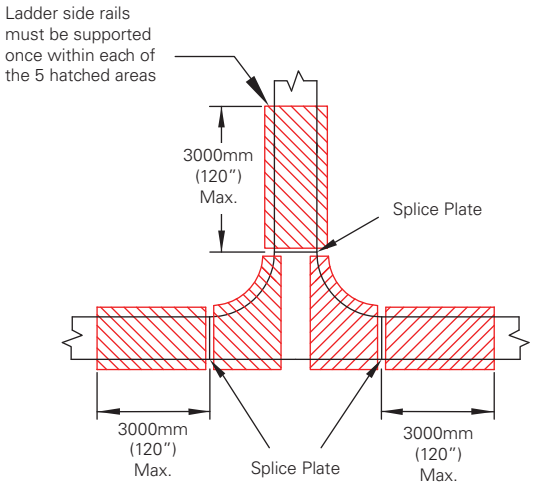

Option 2 900mm (36”) Max Radii

- Attached ladder supported within 600mm of splice
- Fitting supports are eliminated
- Three total supports recommended per fitting

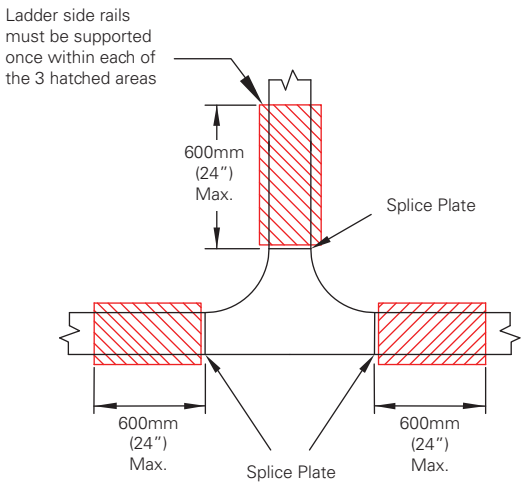

Support Recommendations Horizontal Crosses

NEMA Standard 900mm (36”) Max Radii

- Attached ladder supported within 600mm of splice
- Fittings supported once on each side rail
- Eight total supports recommended per fitting

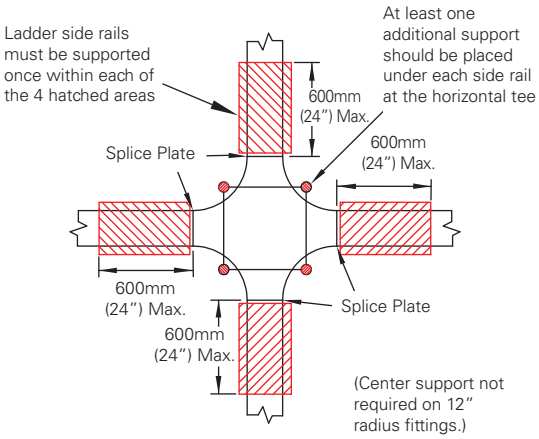

B-Line Recommendations

Options 1 & 2 900mm (36”) Max Radii

- Attached ladder supported up to half span (3000mm max)
- Fitting supported twice within defined area
- Two supports recommended per fitting with flexibility for placement and distance on ladder supports

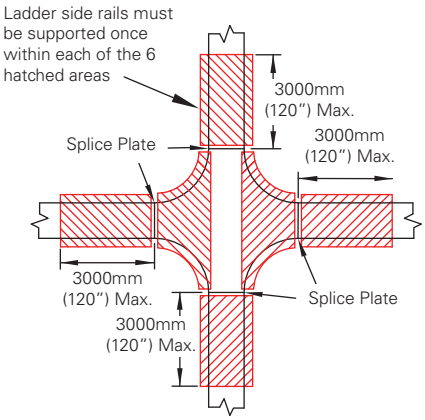

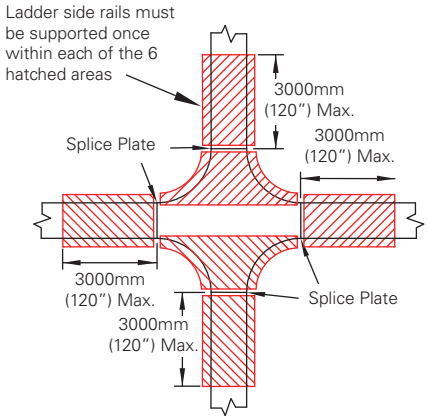

Option 3 900mm (36”) Max Radii

- Attached ladder supported within 600mm of splice
- Fitting supports are eliminated
- Four total supports recommended per fitting

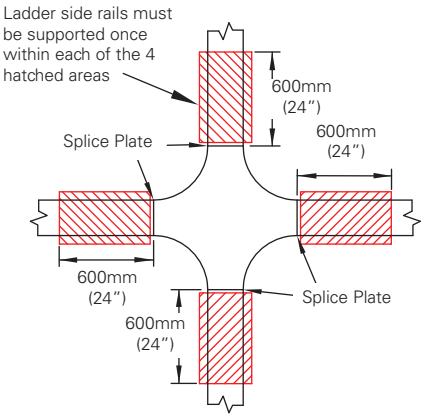

Structural Steel Savings

Support Recommendations
Vertical Inside/Outside Bends

NEMA Standard
900mm (36”) Max Radii

- Attached ladder supported within 600mm of splice
- Fittings supported Twice on each side rail
- Three total supports recommended per fitting

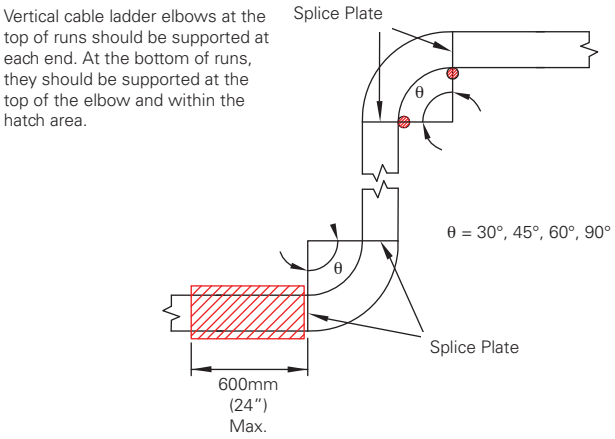

B-Line Recommendations

Options 1 & 2
900mm (36”) Max Radii

- Attached ladder supported up to half span (3000mm max)
- Fitting supported once on each side rail
- One total support recommended per fitting with flexibility for placement and distance on ladder supports

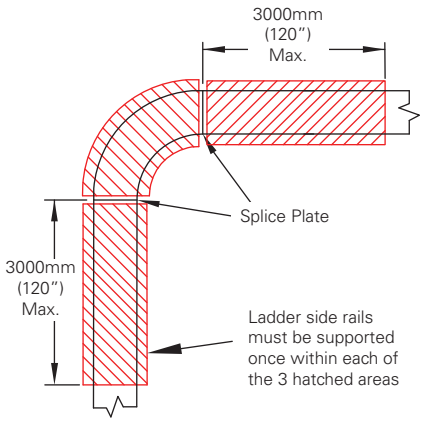

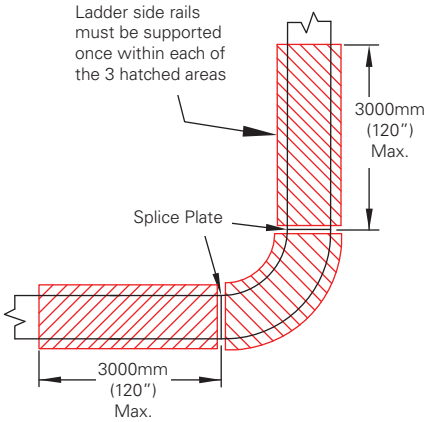

Option 3
900mm (36”) Max Radii

- Attached ladder supported within 300mm of splice and a maxjmum of 3000mm straight section in the transition between the fittings
- Fitting supports once on eachside rail
- One total support recommended per fitting with flexibility for placement and distance on ladder supports

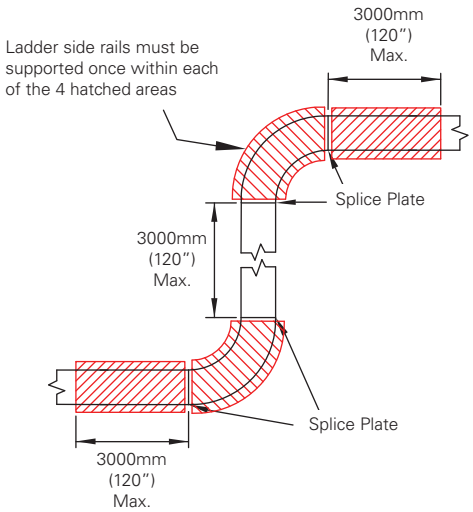

B-Line's Dammam facility is ISO Certified to ISO 9001:2008 by UKAS

Cable Ladder and Tray products are UL Classified as noted

Load tests for GRP Cable Ladder and Cable Tray, Metallic Cable Tray, and Metallic Cable Ladder products shown in this catalog have been witnessed by Det Norske Veritas (DNV)

AL HOTY

Cable Ladder and Pan Cable Tray products shown in this catalog have been tested and witnessed by Al Hoty. Documentation is available upon request.

Cable Ladder shown in this catalog conforms to the requirements of IEC Standard 61537, 2001 Ed.

Cable Ladder products shown in this catalog are CSA Classified as noted

HPL, SDL, and HDL steel ladder and aluminum ladder designs shown in this catalog are approved by the American Bureau of Shipping.

Eaton's B-Line Business is a member of the Cable Tray Institute (CTI)

Eaton's B-Line Business is a member of the National Electrical Manufacturer's Association (NEMA)

المواصفات والموافقات

مصنع بي لاين الدمام حاصل على شهادة الآيزو 9001:2008 من قبل يوكاس

جميع حوامل الكيابل والحوامل المرنة الموجودة ضمن هذا الكتالوج مصنفة ضمن "يو ال"

تمت الشهادة على اختبارات التحميل لحوامل الكيابل جي آر بي والحوامل المرنة، والحوامل المرنة المعدنية، ومنتجات والحوامل المرنة المعدنية في هذا الكتالوج من قبل "ديت نورسك فيريتاس (دي ان في)"

AL HOTY

إن جميع المنتجات الموجودة هنا في الكتالوج قد اختبرت من قبل شركة الحوطي وأصدرت شهادات معتمدة ويمكن الحصول على تلك الشهادات عند الطلب.

جميع حوامل الكيابل والحوامل المرنة الموجودة في هذا الكتالوج مصنفة ضمن IEC للقياسات نسخة رقم ٦١٥٣٧، ٢٠٠١.

جميع حوامل الكيابل والحوامل المرنة الموجودة في هذا الكتالوج مصنفة ضمن CSA

تصاميم SDL، HPL، وHDL للحوامل الحديدية المبينة في هذا الكتالوج معتمدة من قبل المكتب الأمريكي للشحن البحري.

شركة إيتون بي لاين للأعمال عضو في معهد حوال الكيابل CTI

شركة إيتون بي لاين للأعمال عضو في جمعية المصنع الوطني للكهرباء NEMA

Product Overview

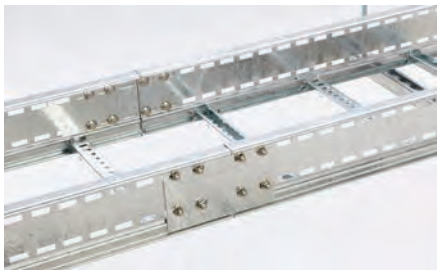

Steel Cable Ladder

Light duty steel cable ladders are designed with a top flange for stiffness and a bottom flange to support rungs securely. Heavier duty ladders utilize the B-Line I-Beam siderail profile, the strongest available siderail shape. The I-Beam provides more strength using less material than C-shaped siderails. The added strength means that the ladders are lighter and easier to install. Rungs for all cable ladders support a 200 lbs. concentrated load beyond the cataloged cable load.

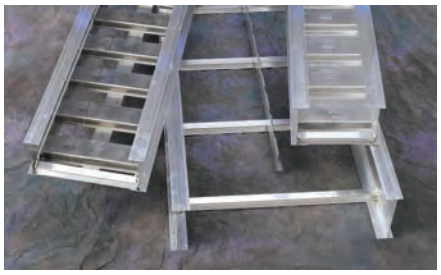

Aluminum Cable Ladder

Ideal for onshore and offshore applications, B-Line aluminum cable ladders are manufactured from marine-grade aluminum. Similar to the steel cable ladders, aluminum cable ladders include the I-Beam siderail for added strength. Options are available to minimize the number of supports required for the ladder, including mid-span splice plates and extra-long lengths.

Fiberglass Cable Ladder & Tray

B-Line's GRP ladder offering is a non-metallic cable management system that is ideal for harsh environments. The material is also lightweight, corrosion resistant, and treated with surface veil for UV resistance. Rungs are both mechanically attached and bonded with adhesive for a secure connection.

Perforated & Solid Bottom Cable Tray

B-Line Perforated and Solid Bottom Cable Tray provides a continuous bottom surface, allowing for constant cable support with no cable sag. Radiused cable fittings allow the cables to adhere to cable manufacturer's bend recommendations. An inside or outside flange on top of the tray provides added strength.

Cable Cleats

B-Line cable cleats are designed to support and retain your cables within your cable tray system in everyday conditions. More importantly, they help prevent damage in short circuit conditions. Cable cleats are one of the first lines of defense to help protect your personnel, your cables, and your cable ladder and tray systems.

Strut Support Systems

B-Line bolted framing is engineered to provide structural support in any environment. A wide variety of finishes, configurations, and fittings meet any construction need. B-Line bolted framing works is conjunction with B-line ladder tray as a preferred method of cable support.

نظرة عامة على المنتج

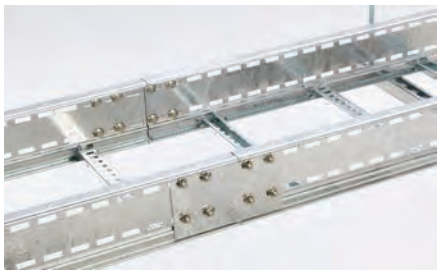

الحوامل الحديدية للكيابل

الحوامل الحديدية للأعمال الخفيفة مصممة من شفاه علوية لصلابة أكثر وشفاه سفلية لدعم سلالم الدرج بمكانها. أما الحوامل الحديدية للأعمال الثقيلة فتستمد قوتها من التصميم المميز لشركة بي لاين على صيغة I-Beam التي تعطي صلابة أكثر مع استخدام مواد أقل ليجعلها أخف وأمتن من مثيلاتها التقليدية ذات الشكل C. والصلابة الأكبر تعني أن الحوامل أخف وأسهل للتركيب. فدرجات جميع حوامل الكيابل تتحمل وزن 200 باوند من الحمل المركز أكثر من حمل الكيابل المذكور في الكاتالوج.

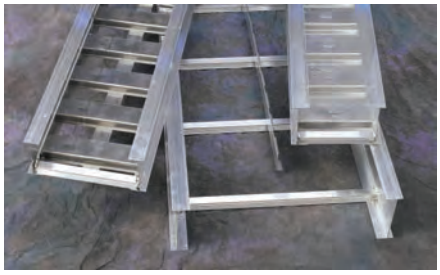

حوامل الكيابل الألمنيومية

تعتبر مثالية في الأماكن داخل البحر وخارجه لصناعة النفط والغاز، حيث أن حوامل بي لاين الألمنيومية مصنعة من درجات الألمنيوم البحرية. وكما هو الحال في حوامل الكيابل الحديدية، فإن الحوامل الأمنيومية مصنعة على شكل I-Beam لحوافها وذلك لإعطائها صلابة وخفة أكثر. كما إن هناك خيارات تتيح التقليل من عدد الدواعم المطلوبة للحامل، بما في ذلك المساندات لتحمل أكبر وأطوال إضافية.

حوامل الكيابل والمرنة المصنعة من الفايبر كلاس

شركة بي لاين توفر أنظمة إدارة لحوامل غير معدنية للكيابل والتي تعتبر مثالية للأماكن الحارة وصعبة الأجواء. كما إن المواد خفيفة الوزن، وتتحمل وتقاوم عوامل الصدأ، وقد عولجت بمواد لمقاومة أشعة الشمس فوق البنفسجية. كما إن درجات الحوامل مربوطة وملحومة ميكانيكيًا بمادة لاصقة شديدة القوة.

حوامل الكيابل المثقبة والصلبة

حوامل الكيابل المثقبة والصلبة من شركة بي لاين توفر سطحًا معدنيًا متواصلًا، ما يتيح لمساندة دعم الكيابل دون تبلدها. كما توفر عددًا من التجهيزات لملاءمة ثني الكيابل بسهولة لتتلاءم مع مستوى توصيات المصنّع. ووجود الشفاه الداخلية والخارجية على قمة الحوامل يوفر قوة إضافية.

مرابط الكيابل

مرابط الكيابل من شركة بي لاين مصممة لدعم الكيابل والمحافظة عليها ضمن نظام الحوامل في جميع الظروف. والأهم أنها تساعد في الوقاية من التلف في حالة المماس الكهربائي. إن المرابط تعتبر العامل الأساس في حماية البشر والكيابل وحوامل الكيابل وأنظمتها.

أنظمة دعم الأعمدة

تمت هندسة الحواف المصومة في شركة بي لاين لتوفير دعم هيكلي في جميع البيئات. وهناك مجموعة متنوعة من التشطيبات، والتوليفات والحشيات التي تستوفي أي احتياجات بناء. تعمل الحواف المصومة في شركة بي لاين بالتداخل مع حوامل الكيابل من بي لاين كأسلوب مفضل لدعم الكيابل.

Metric Cable Ladder Technical Guide

The technical data contained within this guide is intended to help provide adequate information to design and specify an efficient and robust cable ladder system. B-Line recommends the following subjects when designing the cable ladder system which are detailed within the corresponding sections of this guide:

1. Side Rail and Rung Design
2. Materials
3. Finish
4. Corrosion
5. Load Performance Type Tests
6. Environmental Loads
7. Impact
8. Electrical Continuity
9. Free Base Area
10. Thermal Contraction and Expansion
11. Support and Installation Recommendations
12. Cable Restraint

1. Side Rail and Rung Design

B-Line cable ladder side rail uses a high performance rolled I-Beam profile. The more complex the structural profile, the higher the strength yielded by the profile. The rolled I-Beam profile provides greater performance than standard C-section and complex C-section profiles commonly used in cable ladder designs. Due to the higher performance provided by the I-Beam, it allows for a reduced material thickness, helping reduce product weight.

The slotted side rail is designed to provide equally spaced slots along the entire length. These allow the installer to field cut and modify to standard length; and then connect new lengths and/or fittings with a standard splice plate without on-site drilling. The slots also allow the designer and installer to attach additional accessories and equipment, again without the need to drill the cable ladder. In addition, the slots result in a lighter weight ladder with increased ventilation.

2. Materials

MATERIAL	STANDARD	GRADE
Steel	BS EN 10025-2 : 2004	S275 or equivalent
Aluminum	The Aluminum Association	6063-T6 (Side Rails, Rungs, and Splice plates) 5052-H32 (Bottoms, Covers, and Accessories)
Stainless Steel	BS EN 10088-2 : 2005	1.4404 (AISI 316)

Steel Grade S275:

B-Line cable ladder is manufactured from continuously roll formed Grade S275 structural steel or equivalent. Use of a structural grade steel means the material will meet the minimum structural and chemical properties specified in the BS EN 10025-2 : 2004 standard.

Steel Grade S275:

Typical Chemical Composition

Name	Number	Deoxidation Method	C % For thickness range			Si max	Mn max	P max	S max	N max	Cu max	Other
			=< 16	> 16 =<40	>40	%	%	%	%	%	%	%
S275	1.0145	FF	0,21	0,21	0,21	-	1,6	0,035	0,035	-	0,60	-

Typical Mechanical Properties

Name	Number	ReH Minimum Yield strength (MPa) for nominal thickness(mm)									R m (MPa) for nominal thickness (mm)				
		<16	≥16 ≤40	>40 ≤63	>63 ≤80	>80 ≤100	>100 ≤150	>150 ≤200	>200 ≤250	>250 ≤400	<3	≥3 ≤100	>100 ≤150	>150 ≤250	>250 ≤400
S275	1.0145	275	265	255	245	235	225	215	205	195	430-580	410-560	400-540	380-540	380-540

Aluminum

Aluminum cable ladders are fabricated from marine grade, "copper free" extrusions. Aluminum's excellent corrosion resistance comes from its ability to form an aluminum oxide film when scratched or cut. This film re-forms whenever damaged. This property also grants excellent resistance to "weathering" from outdoor applications. Due to its light weight, relative to steel, aluminum possesses one of the best strength to weight ratios amoung alloys used for cable support systems.

These properties have made Aluminum the ideal choice for industrial plants around the world. The resistance to chemicals, indoor and outdoor, can best be determined by tests conducted by the user with exposure to the specific conditions for which it is intended. For further information, contact your local B-Line representative or the Aluminum Association.

For information on common chemicals which aluminum resists, see pages CLS-5 & CLS-6.

Stainless Steel Grade 1.4404 (AISI 316L):

B-Line cable ladder is manufactured from continuously roll formed Grade 1.4404 (AISI 316L) stainless steel. Grade 1.4404 is a non-magnetic stainless steel and part of the "austenitic" group of stainless steels. It is designed to withstand corrosive atmospheres, low and high ambient and operating temperatures. Grade 1.4404 is a superior grade of stainless steel due to it containing molybdenum. This enhances its resistance to corrosion and makes it appropriate for use in marine salt laden saliferous environments. The importance of using Grade 1.4404 (AISI 316L) relates to the corrosion resistance of the steel after welding. Stainless steel resists corrosion because it forms an impervious passive oxide layer on its surface which forms when oxygen is present. When stainless steel is welded, it may lead to a chromium carbide to precipitate at the grain boundaries, depleting the chromium within the austenite and preventing the passive oxide layer from forming. Due to the grain boundaries being small and highly anodic, a rapid corrosion can occur. This process can be prevented by using stainless steels with a carbon content of less than 0.03%. Grade 1.4044 typically has less than 0.03% carbon content.

There are a number of important factors that can make the use of stainless steel imperative. These factors can include long term maintenance costs, corrosion resistance, aesthetic appearance, and ambient operating temperature. Grade 1.4404 stainless steel exhibits stable structural properties such as yield strength and high creep strength at lowered and elevated ambient operating temperatures.

B-Line cable ladder is welded using a stainless steel welding wire to help ensure each weldment exhibits the same corrosion resistance as the base metal. Localized staining in the weld area/heat effected zone may occur when exposed to severe corrosive environments. The shielding gases and low carbon materials used in our welding processes minimize carbon contamination during welding to reduce staining and stress corrosion.

Stainless Steel Grade 1.4404 (AISI 316L):

Typical Chemical Composition

Name	Number	C	Si	Mn	P max.	S	N	Cr	Cu	Mo	Nb	Ni	Others
Standard Grades													
X2CrNiMo17-12-2	1.4404	≤0,030	≤1,00	≤2,00	0,045	≤0,015	≤0,11	16,5-18,5	-	2,00-2,50	-	10,0-13,0	-

Austenitic steels in solution annealed condition

Typical Mechanical Properties

Name	Number	Product Form	Thickness max mm	$R_{p0,2}$ MPa	R_m MPa	A %
Standard Grades						
X2CrNiMo17-12-2	1.4404	C	8	240	530-680	40
		H	13,5	220	530-680	40
		P	75	220	520-670	45
		H	13,5	220	530-730	35
		P	75	220	520-720	35

3. Finish

Zinc Coatings

Zinc protects steel in two ways. First, it protects the steel as a coating and second as a sacrificial anode to repair bare areas such as cut edges, scratches, and gouges. The corrosion protection of zinc is directly related to its thickness and the environment. This means a .2 mil coating will last twice as long as a .1 mil coating in the same environment.

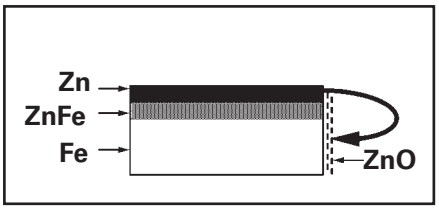

Galvanizing also protects cut and drilled edges.

Hot Dip Galvanized "After Fabrication"
(Hot dip galvanized or batch hot dip galvanized)

Hot Dip Galvanized "After Fabrication" cable ladder products are fabricated from steel and then completely immersed in a bath of molten zinc. A metallic bond occurs resulting in a zinc coating that completely coats all surfaces, including edges and welds.

Another advantage of this method is coating thickness. Cable ladders that are hot dip galvanized after fabrication provide an average minimum zinc coating thickness in accordance with BS EN ISO 1461.

The zinc thickness is controlled by the amount of time each part is immersed in the molten zinc bath; as well as the speed at which it is removed. The term "double dipping" refers to parts too large to fit into the galvanizing kettle and; therefore, must be dipped one end at a time. It does not refer to extra coating thickness.

The layer of zinc which bonds to steel provides a dual protection against corrosion. It helps protect first as an overall barrier coating. If this coating happens to be scratched or gouged, zinc's secondary defense is called upon to protect the steel by galvanic action.

Hot dip galvanizing after fabrication is recommended for prolonged outdoor exposure and will help protect steel for many years in most outdoor environments and in many aggressive industrial environments.

4. Corrosion

IEC 61537 : 2006 section 6.5.2, Table 1 "classification for resistance against corrosion" defines the classification class of various materials and finishes used in the manufacture and supply of cable ladder systems against resistance to corrosion.

In accordance with this classification table, B-Line cable ladder can be supplied to meet the following classifications:

Steel HDG : Class 6

Stainless Steel 1.4404 : Class 9B

Stainless Steel 1.4404 : Class 9D

Corrosion Guide

Chemical	Cable Ladder Material								
	Aluminum			Stainless Type 304			Stainless Type 316		
	Cold	Warm	Hot	Cold	Warm	Hot	Cold	Warm	Hot
Acteone R	R	R	R	R	R	R	R	R	
Aluminum Chloride Solution	NR	NR	NR	NR	--	--	F	--	--
Anhydrous Aluminum Chloride	R	R	R	NR	--	--	F	--	--
Aluminum Sulfate	R	R	R	R	R	R	R	R	R
Ammonium Chloride 10%	F	F	NR	R	R	R	R	R	R
Ammonium Hydroxide	F	F	F	R	R	R	R	R	R
Ammonium Phosphate	F	F	NR	R	--	--	R	--	--
Ammonium Sulfate	F	--	--	R	R	R	R	R	R
Ammonium Thiocyanate	R	R	R	R	--	--	R	R	R
Amyl Acetate	R	R	R	R	R	R	R	R	R
Amyl Alcohol	R	R	R	R	--	--	R	R	R
Arsenic Acid	F	F	F	R	R	--	R	R	R
Barium Chloride	F	F	NR	R	R	R	R	R	R
Barium Sulfate	R	R	R	R	R	--	R	R	--
Barium Sulfide	NR	NR	NR	R	R	--	R	R	--
Benzene R	R	R	R	R	R	R	R	R	
Benzoic Acid	F	F	NR	R	R	R	R	R	R
Boric Acid	R	R	F	R	R	R	R	R	R
Bromine Liquid or Vapor	NR	NR	NR	NR	NR	NR	NR	NR	NR
Butyl Acetate	R	R	R	R	--	--	R	R	R
Butyl Alcohol	R	R	R	R	R	R	R	R	R
Butyric Acid	F	F	F	R	R	R	R	R	R
Calcium Chloride 20%	F	F	NR	R	--	--	R	--	--
Calcium Hydroxide	N	--	--	R	R	F	R	R	R
Calcium Hypochlorite 2 - 3%	F	--	--	R	--	--	R	--	--
Calcium Sulfate	R	R	--	R	R	--	R	R	--
Carbon Monoxide Gas	R	R	R	R	R	R	R	R	R
Carbon Tetrachloride	F	F	NR	F	F	F	R	R	R
Chloroform Dry	R	NR	NR	R	R	--	R	R	--
Chloroform Solution	R	NR	NR	--	--	--	--	--	--
Chromic Acid 10% CP	R	R	--	R	R	F	R	R	R
Citric Acid	F	F	F	R	R	NR	R	R	R
Copper Cyanide	NR	NR	NR	R	R	R	R	R	R
Copper Sulfate 5%	NR	NR	NR	R	R	R	R	R	R
Ethyl Alcohol	R	R	R	R	R	R	R	R	R
Ethylene Glycol	R	R	F	R	R	--	R	R	R
Ferric Chloride	NR	NR	NR	NR	NR	NR	NR	NR	NR
Ferrous Sulfate 10%	R	NR	NR	R	R	--	R	R	--
Formaldehyde 37%	R	R	R	R	R	R	R	R	R
Formic Acid 10%	R	R	--	R	R	NR	R	R	R
Gallic Acid 5%	R	R	NR	R	R	R	R	R	R
Hydrochloride Acid 25%	NR	NR	NR	NR	NR	NR	NR	NR	NR
Hydrofluoric Acid 10%	NR	NR	NR	NR	NR	NR	NR	NR	NR
Hydrogen Peroxide 30%	R	R	R	R	R	R	R	R	R
Hydrogen Sulfide Wet	R	--	--	NR	NR	NR	R	R	R

R = Recommended
F = May be used under some conditions
NR = Not Recommended
-- = Information not available

The corrosion data given in this table is for general comparison only. (Reference Corrosion Resistance Tables, Second Edition)

The presence of contaminates in chemical environments can greatly affect the corrosion rate of any material.

B-Line strongly suggests that field service tests or simulated laboratory tests using actual environmental conditions be conducted in order to determine the proper materials and finishes to be selected.

For questionable environments see Fiberglass Cable Ladder Corrosion Guide (Pages GRP-45 & GRP-46).

Cold = 50 - 80°F Warm = 130 - 170°F Hot = 200 - 212°F

Corrosion Guide

Chemical	Cable Ladder Material								
	Aluminum			Stainless Type 304			Stainless Type 316		
	Cold	Warm	Hot	Cold	Warm	Hot	Cold	Warm	Hot
Lactic Acid 10%	R	F	NR	R	R	F	R	R	R
Lead Acetate 5%	NR	NR	NR	R	R	R	R	R	R
Magnesium Chloride 1%	NR	NR	NR	R	--	F	R	--	R
Magnesium Hydroxide	R	R	R	R	R	--	R	R	--
Magnesium Nitrate 5%	R	--	--	R	R	R	R	R	R
Nickel Chloride	NR	NR	NR	R	--	--	R	--	--
Nitric Acid 15%	NR	NR	NR	R	R	R	R	R	R
Oleic Acid	R	R	F	R	R	F	R	R	R
Oxalic Acid 10%	R	F	NR	NR	NR	NR	R	R	R
Phenol CP	R	R	R	R	R	R	R	R	R
Phosphoric Acid 50%	NR	NR	NR	R	R	R	R	F	NR
Potassium Bromide 100%	R	F	NR	R	R	--	R	R	R
Potassium Carbonate 100%	F	F	--	R	R	R	R	R	R
Potassium Chloride 5%	R	R	R	R	R	R	R	R	R
Potassium Dichromate	R	R	R	R	R	R	R	R	R
Potassium Hydroxide 50%	NR	NR	NR	R	R	R	R	R	R
Potassium Nitrate 50%	R	R	R	R	R	R	R	R	R
Potassium Sulfate 5%	R	R	R	R	R	R	R	R	R
Propyl Alcohol	R	R	R	R	R	R	R	R	R
Sodium Acetate 20%	R	F	F	R	R	R	R	R	R
Sodium Bisulfate 10%	R	F	F	R	R	R	R	R	R
Sodium Borate	R	F	F	R	R	R	R	R	R
Sodium Carbonate 18%	R	F	F	R	R	R	R	R	R
Sodium Chloride 5%	R	NR	NR	R	R	R	R	R	R
Sodium Hydroxide 50%	NR	NR	NR	R	R	R	R	R	R
Sodium Hypochlorite 5%	R	F	F	F	--	--	R	--	--
Sodium Nitrate 100%	R	R	R	R	R	R	R	R	R
Sodium Nitrite 100%	R	R	R	R	R	R	R	R	R
Sodium Sulfate 100%	R	R	F	R	R	R	R	R	R
Sodium Thiosulfate	R	R	R	R	R	R	R	R	R
Sulfur Dioxide (Dry)	R	R	R	R	R	R	R	R	R
Sulfuric Acid 5%	NR	NR	--	F	NR	NR	R	--	--
Sulfuric Acid 10%	NR	NR	NR	NR	NR	NR	NR	NR	NR
Sulfuric Acid 50%	NR	NR	NR	NR	NR	NR	NR	NR	NR
Sulfuric Acid 75 - 98%	NR	NR	NR	NR	NR	NR	NR	NR	NR
Sulfuric Acid 98 - 100%	NR	NR	--	R	--	--	R	R	F
Tannic Acid 10 & 50%	NR	NR	NR	R	R	R	R	R	R
Tartaric Acid 10 & 50%	F	NR	NR	R	R	R	R	R	R
Vinegar F	F	F	R	R	R	R	R	R	
Zinc Chloride 5 & 20%	F	NR	NR	R	F	NR	R	R	R
Zinc Nitrate	F	NR	NR	R	R	R	R	R	R
Zinc Sulfate	F	NR	NR	R	R	R	R	R	R

R = Recommended
F = May be used under some conditions
NR = Not Recommended
-- = Information not available

The corrosion data given in this table is for general comparison only. (Reference Corrosion Resistance Tables, Second Edition)

The presence of contaminates in chemical environments can greatly affect the corrosion rate of any material.

B-Line strongly suggests that field service tests or simulated laboratory tests using actual environmental conditions be conducted in order to determine the proper materials and finishes to be selected.

For questionable environments see Fiberglass Cable Ladder Corrosion Guide (Pages GRP-45 & GRP-46).

Cold = 50 - 80°F Warm = 130 - 170°F Hot = 200 - 212°F

5. Load Performance Type Tests

B-Line cable ladder has been performance load tested in full compliance with the requirements of IEC 61537 : 2006 standard titled "Cable Management – Cable Tray Systems and Cable Ladder Systems"; as well as NEMA VE 1 Test Method A; and load and deflection results published within this catalog are based upon these tests. IEC load tests have been witnessed by DNV independent third party inspectorates.

We recommend that the specifying engineer insists upon third part certificates confirming compliance to the IEC or NEMA standard and published load tables within the manufacturer's catalog. B-Line has tested its cable ladder to the following tests procedures

Type Test - II

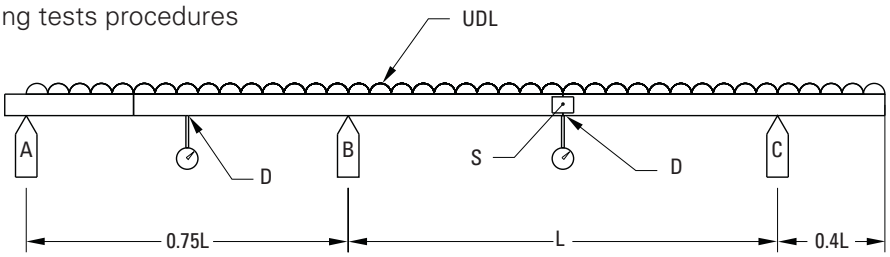

NEMA VE 1
Test Method A

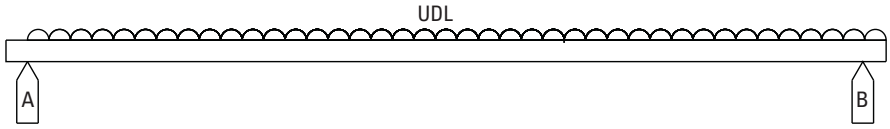

L = Intermediate Span
A,B,C = Support Positions
S = Splice Location (Mid-span)
D = Deflection Measuring Point (Mid-span)
UDL = Uniform Distributed Load

6. Environmental Loads

Wind Loads

Wind loads need to be considered for all outdoor cable ladder installations. The most severe loading to be considered is impact pressure normal to the cable ladder side rails.

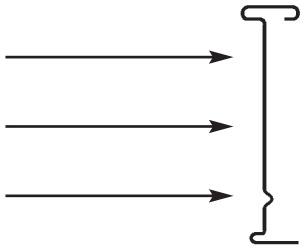

The impact pressure corresponding to several wind velocities are given below in Table 1.

Table 1
Impact Pressures

V (km/h)	P (kg/m²)	V (km/h)	P (kg/m²)	V (km/h)	P (kg/m²)
24	2.83	104	52.70	184	164.94
32	4.98	112	61.00	192	179.58
40	7.81	120	70.27	200	195.20
48	11.22	128	80.03	208	211.30
56	15.27	136	90.28	216	227.41
64	19.96	144	101.02	224	244.49
72	25.28	152	112.73	232	262.54
80	31.18	160	124.93	240	281.09
88	37.72	168	137.62		
96	44.94	176	150.79		

V= Wind Velocity P= Impact Pressure

Note: These values are for an air density of 16.02 kg/m³ corresponding to a temperature of 15.5˚ C and barometric pressure of 10,355 kg/m2.

Example Calculation: Side load for 150mm side rail with 160 km/h wind

$$\frac{124.93 \times 150}{1000} = 18.74 \text{ kg/m}$$

When covers are installed on outdoor cable ladders, aerodynamic effect which can produce a lift strong enough to separate a cover from a ladder needs to be considered. Wind moving across a covered ladder (see detail 2) creates a positive pressure inside the ladder and a negative pressure above the cover. This pressure difference can lift the cover off the ladder.

Detail 2

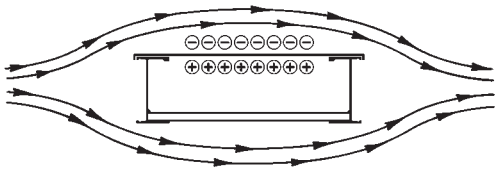

B-Line recommends the use of high performance cover clamps when covered ladders are installed in an area where strong winds occur.

Ice Loads

Glaze ice is the most commonly seen form of ice build-up. It is the result of rain or drizzle freezing on impact with an exposed object. Generally, only the top surface (or the cover) and the windward side of a cable ladder system is significantly coated with ice. The maximum design load to be added due to ice should be calculated as follows:

$$LI = \left(\frac{W \times TI}{1{,}000{,}000} \right) \times DI \quad \text{where;}$$

LI= Ice Load (kg/m)
W= Cable Tray Width (mm)
TI= Maximum Ice Thickness (mm)
DI= Ice Density = 913 kg/m^3

The maximum ice thickness will vary depending on location. A thickness of 12mm can be used as a conservative standard.

Example Calculation:
Ice Loads for 600mm wide tray with 12mm thick ice;

$$\frac{600 \times 12}{1{,}000{,}000} \times 913 = 6.57 \text{ kg/m}$$

Snow Loads

Snow is measured by density and thickness. The density of snow varies almost as much as its thickness. The additional design load from snowfall should be determined using the building codes which apply for each installation. These typically include maximum snowfall and ice accumulation for the region.

7. Impact

B-Line cable ladder conforms to an Impact Test Value of 50J based on the IEC 61537:2006, Section 10.9.

8. Electrical Continuity

Electrical continuity testing of B-Line cable ladder was conducted in accordance with IEC 61537 : 2006, section 11.1.2 and results in an electrical impedance less than 50milli ohms across the joint and 5 milli ohms per meter without a joint. B-Line Metallic Cable Ladder has also been classified as an Equipment Grounding Conductor by Underwriters Laboratories (UL) and meets the National Electrical Code (NEC) Sections 392.60 (A) and 392.60 (B).

9. Free Base Area

In accordance with IEC 61537; 2006, section 6.8, Table 5 "Free Base Area Classification" B-Line cable ladder has a classification of 'Y' on standard 300mm rung spacing and a calculated free base area of 86%.

10. Thermal Contraction and Expansion

It is important that thermal contraction and expansion be considered when installing cable ladder systems. The length of the straight cable ladder runs and the temperature differential govern the number of expansion splice plates required (see Table 2 below).

The cable ladder should be anchored at the support nearest to its midpoint between the expansion splice plates and secured by expansion guides at all other support locations (see Figure 1). The cable ladder should be permitted longitudinal movement in both directions from that fixed point. Covers should be overlapped at expansion splices.

Accurate gap settings at the time of installation are necessary for the proper operation of the expansion splice plates. The following procedure should assist the installer in determining the correct gap: (see Figure 2)

1. Plot the highest expected metal temperature on the maximum temperature line.
2. Plot the lowest expected metal temperature on the minimum temperature line.
3. Draw a line between the maximum and minimum points.
4. Plot the metal temperature at the time of installation to determine the gap setting.

Figure 1

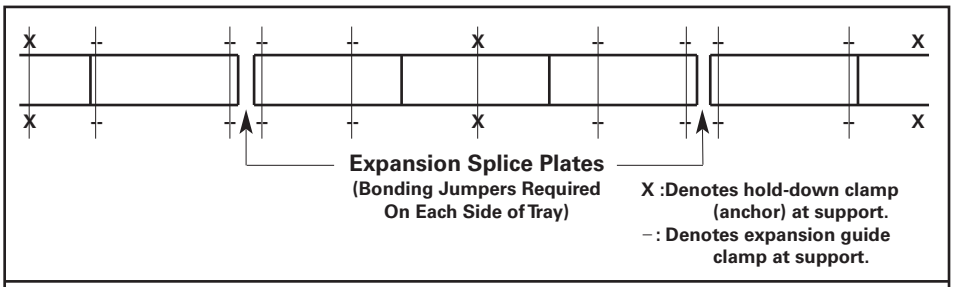

Typical Cable Ladder Installation

Figure 2

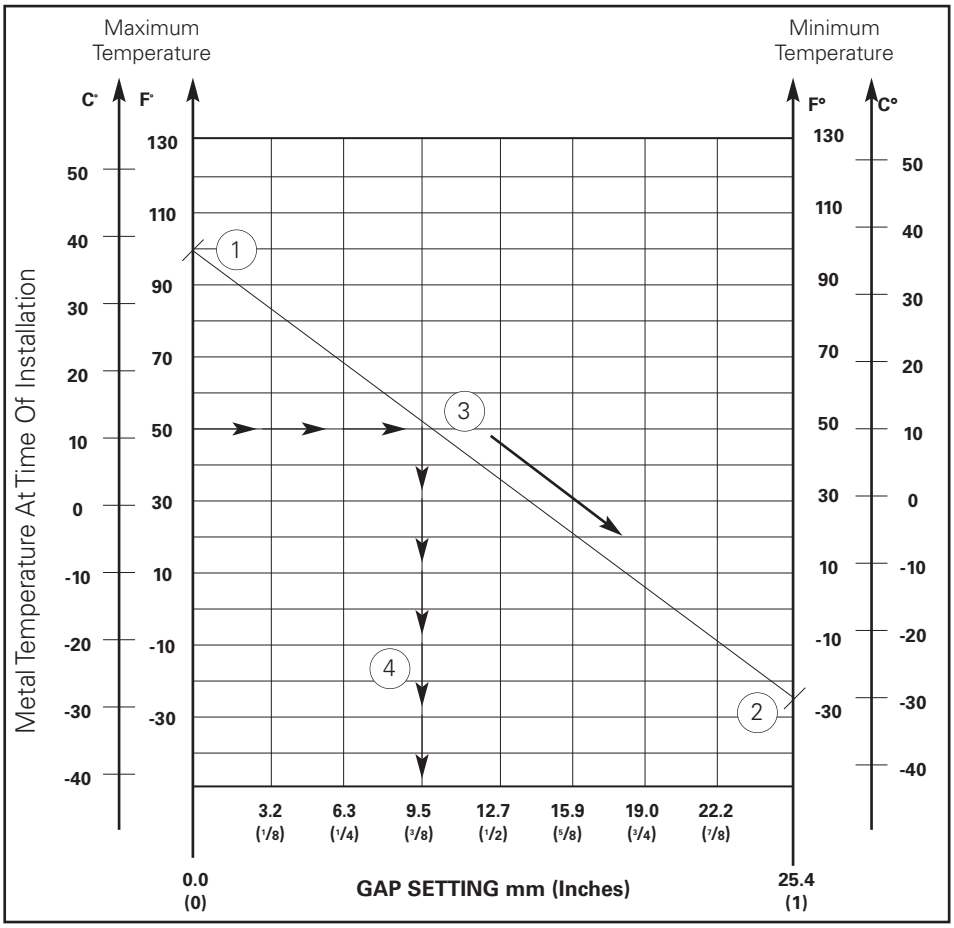

Table 2

Maximum Spacing Between Expansion Joints For 25mm Movement

Temperature Differential		Steel		Aluminum		Stainless Steel 304		Stainless Steel 316	
°C	°F	m	Feet	m	Feet	m	Feet		
13.9	25	156.0	512	79.2	260	105.7	347	115.5	379
27.8	50	78.0	256	39.6	130	53.0	174	57.6	189
41.7	75	52.1	171	26.5	87	35.4	116	38.4	126
55.6	100	39.0	128	19.8	65	26.5	87	29.0	95
69.4	125	31.1	102	15.8	52	21.0	69	23.2	76
83.3	150	25.9	85	13.1	43	17.7	58	19.2	63
97.2	175	22.2	73	11.3	37	15.2	50	16.4	54

Note: every pair of expansion splice plates requires two earth continuity connectors for grounding continuity.

11. Support and Installation Recommendations

Deflection

Deflection in a cable ladder system is primarily an aesthetic consideration. When a cable ladder system is installed in a prominent location, a maximum simple beam deflection of 1/100 of support span can be used as a guideline to minimize visual deflection.

There are two typical beam configurations: simple beam and continuous beam.

A simple beam is a single straight section of cable ladder supported, but not fastened at either end. When the ladder is loaded, the cable ladder is allowed to flex. Simple beam support is seldom used in field installations.

Simple Beam

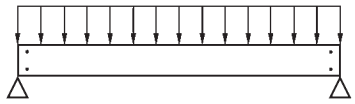

A continuous beam is the beam configuration most commonly used in cable ladder installations (for example when cable ladders are installed across several supports to form a number of spans). The continuous beam possesses traits of both simple and fixed beams. When equal loads are applied to all spans simultaneously, the counter balancing effect of the loads on both sides of a support restricts the movement of the cable ladder at the support. The effect is similar to that of a fixed beam. The end spans behave substantially like simple beams. When cable ladders of identical design are compared, the continuous beam installation will typically have approximately half the deflection of a simple beam of the same span.

Continuous Beam

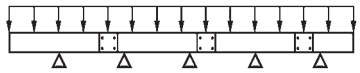

The following factors should be considered when addressing cable ladder deflection:

1. Deflection in a cable ladder system can be reduced by decreasing the support span, or by using a taller or stronger cable ladder.
2. Economic consideration must be given when addressing cable deflection criteria. Eliminating deflection can mean purchasing a stronger ladder at higher cost.
3. The location of splices in a continuous span will affect the deflection of the cable ladder system. The splices should be located at points of minimum stress whenever practical.

   B-Line recommends the following for splice installation:

   Straight section lengths should be equal to or greater than the span length to ensure not more than one splice between supports.

See the figures below for splicing configuration samples.

Typical Continuous Span Configuration

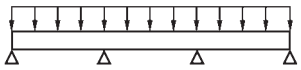

+ Maximum Positive Moment
- Maximum Negative Moment

Preferred Splice Plate Locations

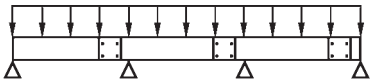

Undesirable Splice Plate Locations

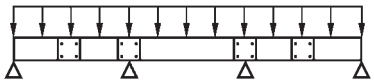

Future Expansion Requirements

One of the many features of cable ladder is the ease of adding cables to an existing system. Future expansion should always be considered when selecting a cable ladder, and allowance should be made for additional fill area and load capacity. A minimum of 50% expansion allowance is recommended.

Installation

Shorter cable ladder lengths are typically easier to maneuver on the job site during installation. Two people may be needed to manipulate longer cable ladder sections, while shorter sections might be handled by one person. Although longer cable ladder lengths are more difficult to maneuver, they can reduce installation time due to the fact that there are fewer splice connections. This trade-off should be evaluated for each set of job site restrictions.

For use with Cable Ladder

For use with Cable Tray

12. Cables and Cable Restraint

Type of Cable

In general, small, highly flexible cables should be installed in cable ladders with close rung spacing of 200mm or less. Larger, less flexible cables are typically installed in cable ladders having 300mm rung spacing. Cable ladders having rung spacing greater than 300mm should be used for very large, stiff cables to help reduce cost and facilitate cable drop-outs.

Cable Exposure

Many cable jackets are manufactured to withstand the environment without additional protection, favoring the use of the cable ladder. Cable jackets should be evaluated during project design for suitability in the project application.

Cable Attachment

A major advantage of cable ladder is the freedom of entry and exit of the cables, as well as the ability to secure cables in the cable ladder. With standard rungs, the cables may be attached with either cable ties or cable cleats. Cable attachment is particularly important on vertical runs or when the ladder is installed on its side. Ladder rung spacing should be chosen to provide adequate cable attachment points while allowing the cables to exit the system.

Cable Flexibility

The proper bend radius for cable ladder fittings is usually determined by the bend radius and stiffness of the cables to be installed. Typically, the cable manufacturer will recommend a minimum bend allowance for each cable. The fitting radius should be equal to or larger than the minimum bend radius of the largest cable which may ever be installed in the system. When several cables are to be installed in the same cable ladder, a larger bend radius may be desirable to ease cable installation.

Space Limitations

The overall dimensions for a cable ladder fitting will increase as the bend radius increases. Size and cost make the smallest acceptable fitting radius most desirable. When large radius fittings are required, the system layout must be designed to allow adequate space.

The following factors should be considered when determining the appropriate cable ladder system.

Material & Finish

- Standards Available
- Corrosion
- Thermal Contraction and Expansion
- Installation Considerations and Electrical Grounding Capacity

Strength

- Environmental Loads
- Concentrated Loads
- Support Span
- Deflection
- Rung/Trough Data
- Load Capacity
- Cable Data

Width & Available Loading Depth

- Cable Diameter
- Allowable Cable Fill
- Barrier Requirements
- Future Expansion Requirements
- Space Limitations

Length

- Lengths Available
- Support Spans (Not to exceed the length of straight sections)
- Space Limitations
- Installation

Loading Possibilities

- Power Application
- Data/Communication Cabling

Bottom Type

- Type of Cable
- Cost vs. Strength
- Cable Exposure
- Cable Attachment

Fitting Radius

- Cable Flexibility
- Space Limitations

Load Capacity

Calculate each anticipated load factor, then add them to obtain a total load.

(Example: Working Load = Cable + Concentrated + Wind + Snow + Ice Loads).

The Working Load should be used, along with the maximum support spacing, to select a span/load class designation from Table 3. Table 4 (page CLS-14) contains the most common load/span class designations per the US and Canadian metallic cable ladder standard, CSA, C22.2 No. 126.1-98 First Addition, NEMA VE 1-1998.

Table 3 - These Loading Classes Are Historical and Supplied For Reference Only

Load Class lb/ft (kg/m)	Class Designations for lengths of ft (m) 8 (2.4)	ft (m) 10 (3.0)	ft (m) 12 (3.7)	ft (m) 16 (4.9)	ft (m) 20 (6.0)
25 (37)	—	A	—	—	—
45 (67)	—	—	—	—	D
50 (74)	8A	—	12A	16A	20A
65 (97)	—	C	—	—	—
75 (112)	8B	—	12B	16B	E or 20B
100 (149)	8C	—	12C	16C	20C
120 (179)	—	D	—	—	—
200 (299)	—	E	—	—	—

Note: 8A/B/C, 12A/B/C, 16A/B/C, and 20A/B/C were the traditional NEMA designations. A, C, D, and E were the conventional CSA designations. Actual tested loadings per span will be stated on the product labels.

Table 4 - B-Line Cable Ladder Load Classes

Aluminum
Copper free

Series	Load Depth	Load lb/ft (kg/m)	Span ft (m)	Former Classes NEMA	Former Classes CSA
RWI04A	3	75 (112)	12 (3.7)	12B	
24A	3	126 (187)	12 (3.7)	12C	D_1 (3m)
34A	3	80 (119)	20 (6.1)	20B	E (6m)
RWI05A	4	83 (123)	12 (3.7)	12B	
25A	4	50 (74)	20 (6.1)	16B	D_1 (6m)
35A	4	121 (180)	16 (4.9)	20B	E (3m)
RWI06A	5	82 (121)	12 (3.7)	12B	
26A	5	51 (76)	20 (6.1)	20A	D_1 (6m)
36A	5	84 (125)	20 (6.1)	20B	E (6m)
46A	5	103 (153)	20 (6.1)	20C	E (6m)
H46A	5	167 (248)	20 (6.1)	20C+	131 kg/m (7.6m)
RWI07A	6	122 (182)	12 (3.7)	12C	
37A	6	80 (119)	20 (6.1)	20B	
47A	6	100 (149)	20 (6.1)	20C	
H47A	6	149 (222)	20 (6.1)	20C+	
57A	6	102 (152)	30 (9.1)	20C+	152 kg/m (9.1m)

Fiberglass

Series	Load Depth	Load lb/ft (kg/m)	Span ft (m)	Former Classes NEMA	Former Classes CSA
075-02C	50mm	108.7 (161.7)	9.8 (3)	10C	
100-02C	75mm	120.4 (179.1)	12.0 (3.7)	12B	
150-03C	125mm	168.0 (250.0)	12.0 (3.7)	12C	
150-06C	125mm	110.6 (164.6)	19.7 (6.0)	20C	
150-05C	125mm	165.1 (245.7)	19.7 (6.0)	20C	

Steel
HDGAF/Pre-Galvanized

Series	Load Depth	Load lb/ft (kg/m)	Span ft (m)	Former Classes NEMA	Former Classes CSA
148*	3	51 (76)	12 (3.7)	12A	C_1 (3m)
156*	4	76 (113)	12 (3.7)	12B	C_1 (3m)
166*	5	77 (115)	12 (3.7)	12B	C_1 (3m)
176*	6	86 (128)	12 (3.7)	12B	137 kg/m (3.7m)
HDL-125*	103mm	– (140)	– (6)		
HDL-150*	128mm	– (184)	– (6)		
SDL-125*	103mm	– (90)	– (6)		
SDL-150*	128mm	– (132)	– (6)		

Stainless Steel

Series	Load Depth	Load lb/ft (kg/m)	Span ft (m)	Former Classes NEMA	Former Classes CSA
HDL125X	103mm	– (105)	– (6)		
HDL-150X	128mm	– (140)	– (6)		
HPL-125X	103mm	– (90)	– (6)		
HPL-150X	128mm	– (98)	– (6)		
SDL-125X	103mm	– (88)	– (6)		
SDL-150X	128mm	– (121)	– (6)		

* G denotes CSA Type 1 (HDGAF) or P denotes CSA Type 2 (Mill-Galvanized) **X** denotes SS6 (Type 316 Stainless)

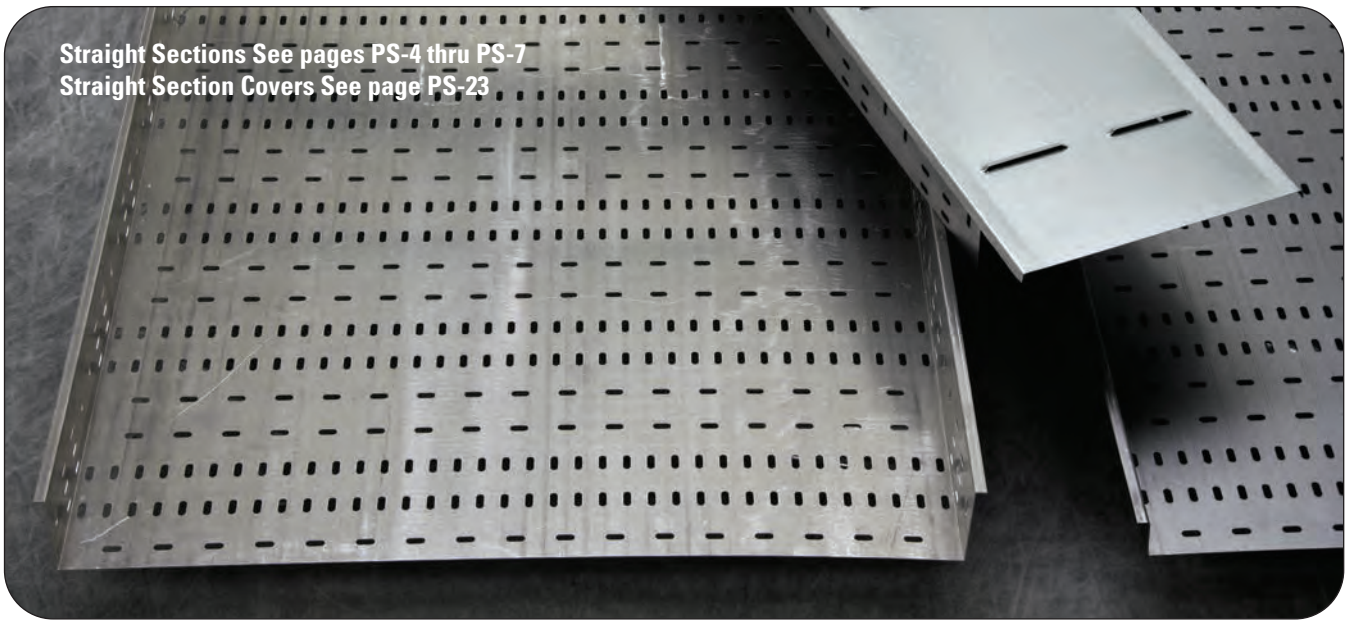
Straight Sections See pages PS-4 thru PS-7
Straight Section Covers See page PS-23

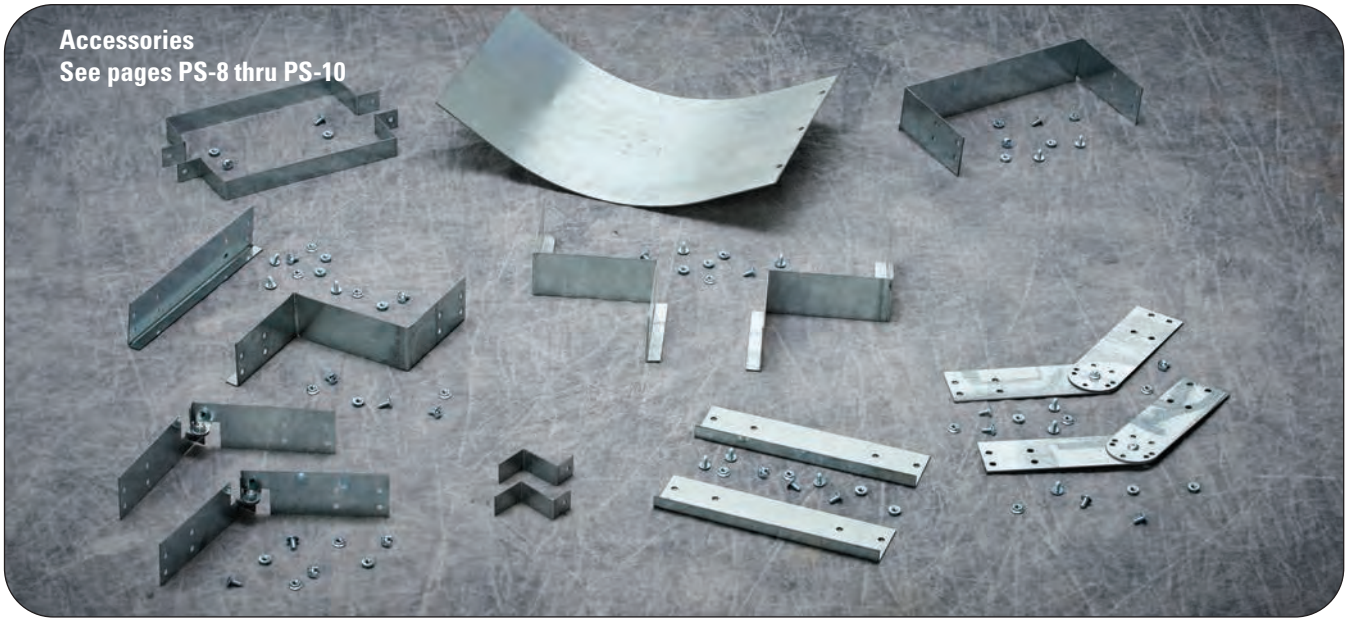
Accessories
See pages PS-8 thru PS-10

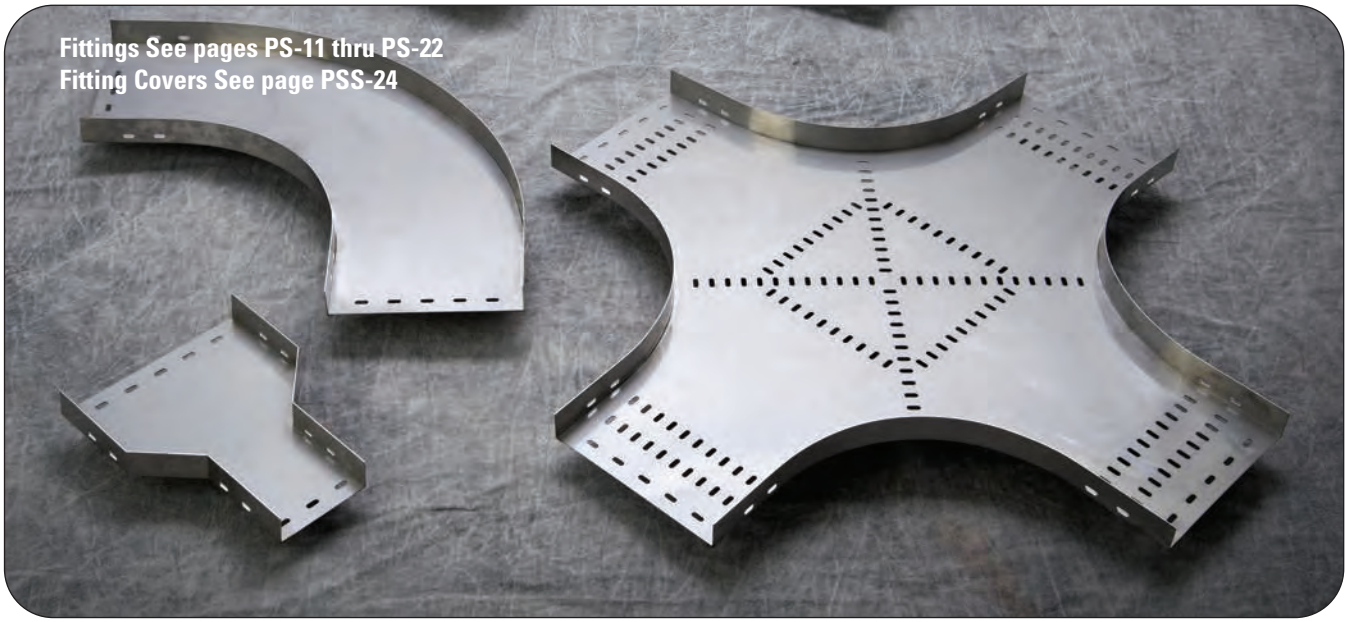
Fittings See pages PS-11 thru PS-22
Fitting Covers See page PSS-24

Perforated & Solid Cable Tray

1. Single piece construction
2. Structural grade steel
3. Solid or perforated bottoms provide continuous support
4. Straight sections and fittings labeled on every piece to show
   - Part Number
   - Company Name
   - Order Number
   - Material

Profiles

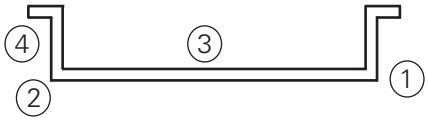

90° Outside Flange

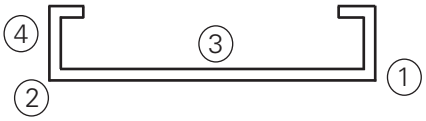

90° Inside Flange

Splices -- provide system integrity

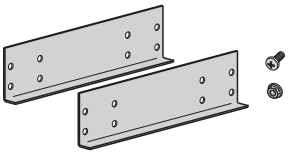

- Match material of tray
- Combination of splice and perforated pattern eliminates need for separate expansion splices
- Multiple finish and hardware options available

Accessories - Flexible Design Principles

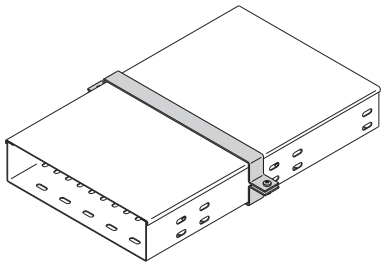

Wrap-A-Round Cover Clamp

- Cover clamps and hold downs can be used on both the 'C' and 'B' profiles
- Flexible hardware and finish options available
- Supplied with matching hardware

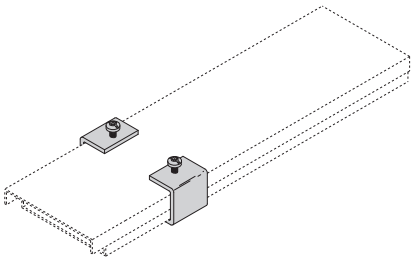

Cover Clamps

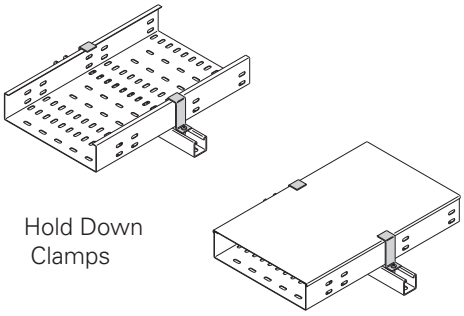

Hold Down Clamps

Perforated & Solid Cable Tray - Load Data

Perforated Cable Tray Load Capacities

Height	Thickness	Span	Material	Load (kg/m)	Material	Load (kg/m)
50	1.0mm	3m	Steel	54.9	Aluminum	NA
75				71.7		NA
100				80.4		NA

Height	Thickness	Span	Material	Load (kg/m)	Material	Load (kg/m)
50	1.5mm	3m	Steel	103.6	Aluminum	33.5
75				158.5		52.6
100				182.9		73.4

Height	Thickness	Span	Material	Load (kg/m)	Material	Load (kg/m)
50	2.0mm	3m	Steel	79.2	Aluminum	46.8
75				201.2		101.5
100				219.4		115.8

All tests per NEMA VE-1. 1.0mm thickness to maximum width of 300mm. All others tested to 900mm width.
Published load safety factor is 1.5.

Perforated Cable Tray Weights (kg/m)

		Steel Tray Weight By Width								
Height	Thickness	50mm	100mm	150mm	200mm	300mm	400mm	500mm	600mm	900mm
25	1.0mm	0.87	1.24	1.61	1.97	2.71	3.45	4.18	4.92	NA
	1.5mm	1.28	1.83	2.38	2.94	4.04	5.14	6.25	7.35	NA
	2.0mm	1.67	2.41	3.14	3.88	5.35	6.82	8.29	9.76	NA
50	1.0mm	1.24	1.61	1.97	2.34	3.08	3.81	4.55	5.29	7.49
	1.5mm	1.83	2.38	2.94	3.49	4.59	5.69	6.80	7.90	11.21
	2.0mm	2.41	3.14	3.88	4.61	6.09	7.56	9.03	10.50	14.91
75	1.0mm	NA	1.97	2.34	2.71	3.45	4.18	4.92	5.65	7.86
	1.5mm	NA	2.94	3.49	4.04	5.14	6.25	7.35	8.45	11.76
	2.0mm	NA	3.88	4.61	5.35	6.82	8.29	9.76	11.24	15.65
100	1.0mm	NA	2.34	2.71	3.08	3.81	4.55	5.29	6.02	8.23
	1.5mm	NA	3.49	4.04	4.59	5.69	6.80	7.90	9.00	12.32
	2.0mm	NA	4.61	5.35	6.09	7.56	9.03	10.50	11.97	16.39

		Aluminum Tray Weight By Width								
Height	Thickness	50mm	100mm	150mm	200mm	300mm	400mm	500mm	600mm	900mm
25	1.5mm	0.44	0.62	0.81	1.00	1.38	1.75	2.13	2.50	NA
	2.0mm	0.57	0.82	1.07	1.32	1.82	2.32	2.82	3.32	NA
50	1.5mm	0.62	0.81	1.00	1.19	1.56	1.94	2.31	2.69	3.82
	2.0mm	0.82	1.07	1.32	1.57	2.07	2.57	3.07	3.58	5.08
75	1.5mm	NA	1.00	1.19	1.38	1.75	2.13	2.50	2.88	4.01
	2.0mm	NA	1.32	1.57	1.82	2.32	2.82	3.32	3.83	5.33
100	1.5mm	NA	1.19	1.38	1.56	1.94	3.31	2.69	3.07	4.19
	2.0mm	NA	1.57	1.82	2.07	2.57	3.07	3.58	4.08	5.58

For approximate solid cable tray weights multiply above steel and aluminum weights by 1.064
NA = Not Available

Straight Section Part Numbering - 25mm Height

Prefix — Suffix

Example: **P 025 V B P 15 SS - 200 - 3000**

Tray Type	Height	Bottom Type	Return Flange Type	Material	Thickness	Type	Width	Length
P = (Perforated & Solid Cable Tray)	**025** = 25mm	**S** = Solid **V** = Perforated	**B** = Outside Flange	**P** = Pre-Galv **G** = HDGAF **SS6** = Stainless Type 316 **A** = Aluminum	**10** * = 1.0mm **15** = 1.5mm **20** = 2.0mm	**SS =** Straight Section	**050** = 50mm **100** = 100mm **150** = 150mm **200** = 200mm **300** = 300mm **400** = 400mm **500** = 500mm **600** = 600mm	**3000** = 3000mm

* 1.0mm thickness is only available in widths up to and including 300 (300mm) and is not available in aluminum.

Splice plates not supplied with straight sections. Order standard splice plates separately from page PS-8.
One (1) pair required to connect to system.

90° Outside Flange (B) with Solid Bottom (S)
shown below

90° Outside Flange (B) with Perforated Bottom (V)
shown below

Notes:
Perforated slot dimensions and patterns may vary depending on tray size and type.
The 90° inside flange is not available on 025 tray heights.

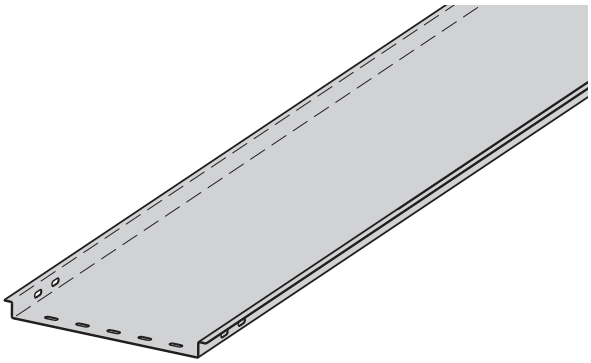

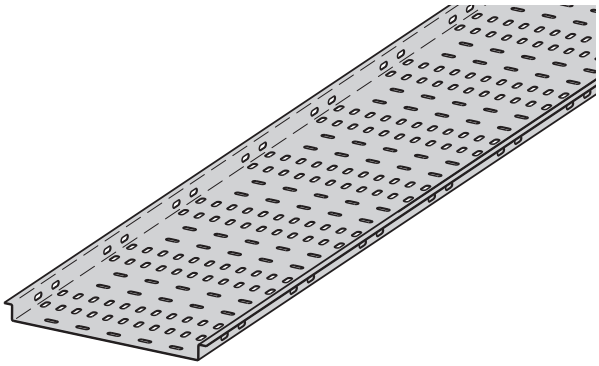

Perforated & Solid Cable Tray Dimensional Drawing - Tray Height 25mm

Outside Flange (B)

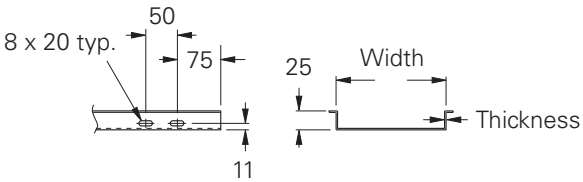

All dimensions are in millimeters unless otherwise specified.

Straight Section Part Numbering - 50mm Height

Prefix — Suffix

Example: **P 050 V B P 15 SS - 200 - 3000**

Tray Type	Height	Bottom Type	Return Flange Type	Material	Thickness	Type	Width	Length
P = (Perforated & Solid Cable Tray)	**050** = 50mm	**S** = Solid **V** = Perforated	**B** = Outside Flange	**P** = Pre-Galv **G** = HDGAF **SS6** = Stainless Type 316 **A** = Aluminum	**10** * = 1.0mm **15** = 1.5mm **20** = 2.0mm	**SS =** Straight Section	**050** = 50mm **100** = 100mm **150** = 150mm **200** = 200mm **300** = 300mm **400** = 400mm **500** = 500mm **600** = 600mm **900** = 900mm	**3000** = 3000mm

* 1.0mm thickness is only available in widths up to and including 300 (300mm) and is not available in aluminum.

Splice plates not supplied with straight sections. Order standard splice plates separately from page PS-8.
One (1) pair required to connect to system.

90° Outside Flange (B) with Solid Bottom (S)
shown below

90° Outside Flange (B) with Perforated Bottom (V)
shown below

Notes:
Perforated slot dimensions and patterns may vary depending on tray size and type.
The 90° inside flange is not available on 050 tray heights.

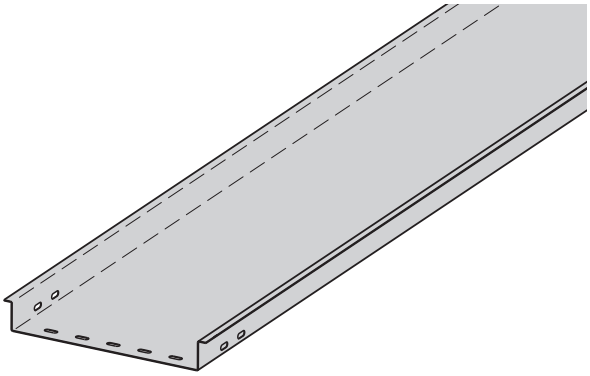

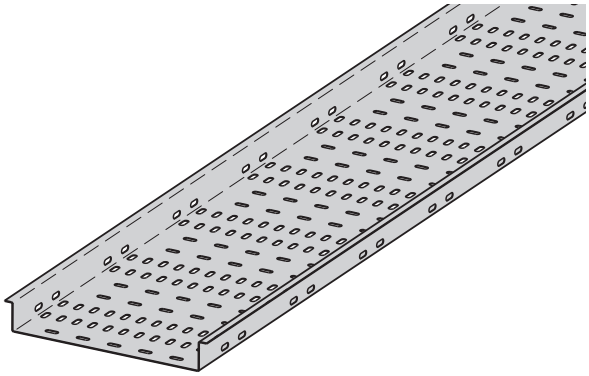

Perforated & Solid Cable Tray Dimensional Drawing - Tray Height 50mm

Outside Flange (B)

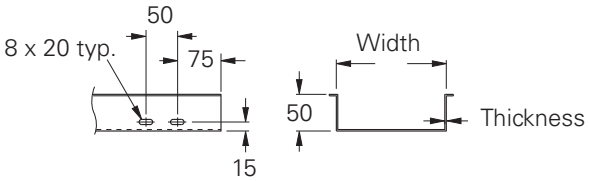

All dimensions are in millimeters unless otherwise specified.

Straight Section Part Numbering - 75mm Height

Prefix Suffix

Example: **P 075 V C P 15 SS - 200 - 3000**

Tray Type	Height	Bottom Type	Return Flange Type	Material	Thickness	Type	Width	Length
P = (Perforated & Solid Cable Tray)	**075** = 75mm	**S** = Solid **V** = Perforated	**C** = Inside Flange **B** = Outside Flange	**P** = Pre-Galv **G** = HDGAF **SS6** = Stainless Type 316 **A** = Aluminum	**10** * = 1.0mm **15** = 1.5mm **20** = 2.0mm	**SS =** Straight Section	**100** = 100mm **150** = 150mm **200** = 200mm **300** = 300mm **400** = 400mm **500** = 500mm **600** = 600mm **900** = 900mm	**3000** = 3000mm

* 1.0mm thickness is only available in widths up to and including 300 (300mm) and is not available in aluminum.

Splice plates not supplied with straight sections. Order standard splice plates separately from page PS-8.
One (1) pair required to connect to system.

90° Outside Flange (B) with Solid Bottom (S)
shown below

90° Inside Flange (C) with Perforated Bottom (V)
shown below

Note:
Perforated slot dimensions and patterns may vary depending on tray size and type.

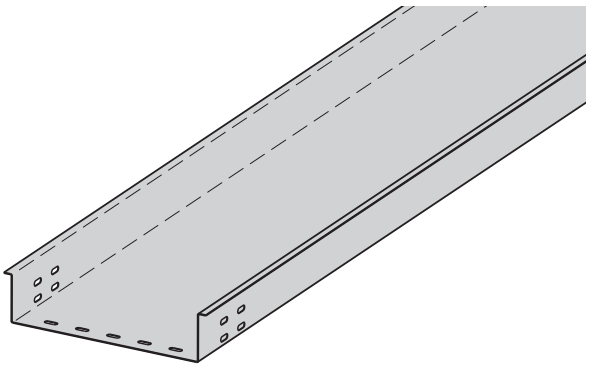

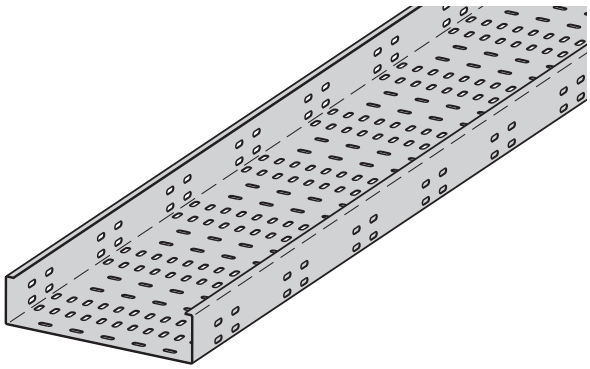

Perforated & Solid Cable Tray Dimensional Drawing - Tray Height 75mm

90° Outside Flange (B)

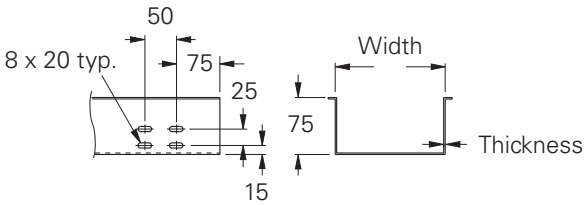

90° Inside Flange (C)

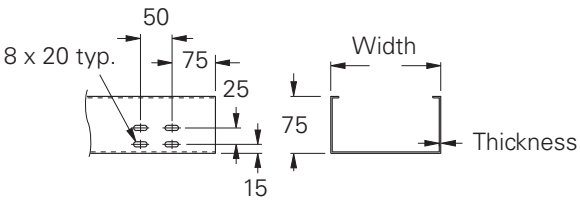

All dimensions are in millimeters unless otherwise specified.

Straight Section Part Numbering - 100mm Height

Prefix | Suffix

Example: **P 100 V C P 15 SS - 200 - 3000**

Tray Type	Height	Bottom Type	Return Flange Type	Material	Thickness	Type	Width	Length
P = (Perforated & Solid Cable Tray)	**100** = 100mm	**S** = Solid **V** = Perforated	**C** = Inside Flange **B** = Outside Flange	**P** = Pre-Galv **G** = HDGAF **SS6** = Stainless Type 316 **A** = Aluminum	**10** * = 1.0mm **15** = 1.5mm **20** = 2.0mm	**SS =** Straight Section	**100** = 100mm **150** = 150mm **200** = 200mm **300** = 300mm **400** = 400mm **500** = 500mm **600** = 600mm **900** = 900mm	**3000** = 3000mm

* 1.0mm thickness is only available in widths up to and including 300 (300mm) and is not available in aluminum.

Splice plates not supplied with straight sections. Order standard splice plates separately from page PS-8.
One (1) pair required to connect to system.

90° Outside Flange (B) with Solid Bottom (S)
shown below

90° Inside Flange (C) with Perforated Bottom (V)
shown below

Note:
Perforated slot dimensions and patterns may vary depending on tray size and type.

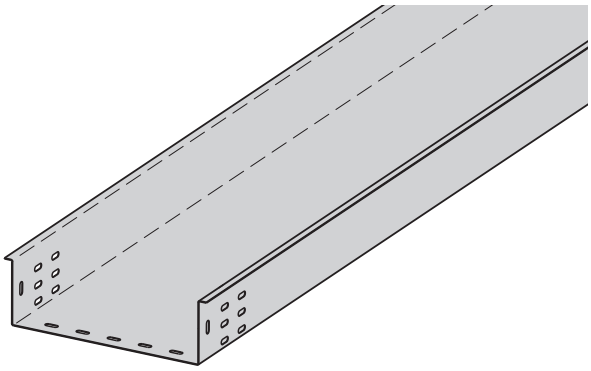

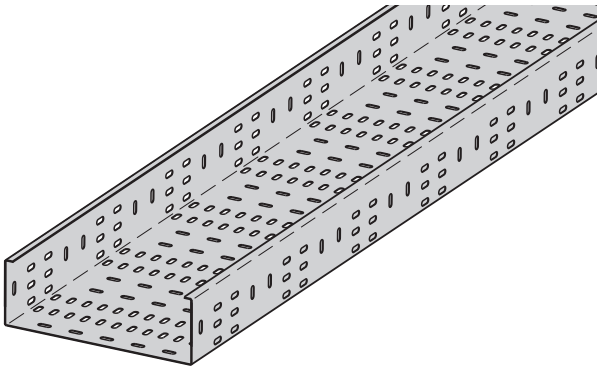

Perforated & Solid Cable Ladder Dimensional Drawing - Side Rail Height 100mm

90° Outside Flange (B)

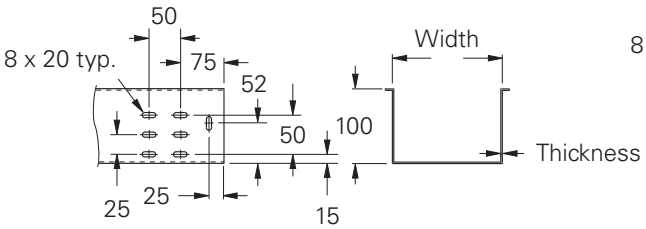

90° Inside Flange (C)

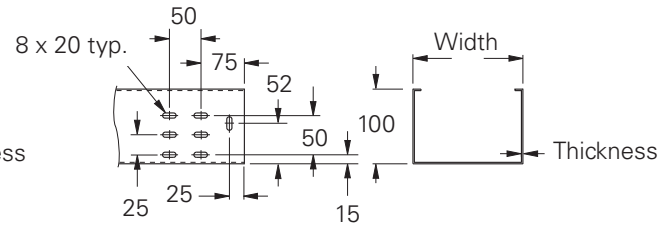

All dimensions are in millimeters unless otherwise specified.

Bottom Splice Plates (Mounted on bottom of trays as splice plates or to stabilize connections on wider trays)

(Sold Individually With Hardware)

- ** Insert P for Pre-Galvanized,
  G for Hot Dip Galvanized,
  SS6 for Stainless Steel 316
  A for Aluminum

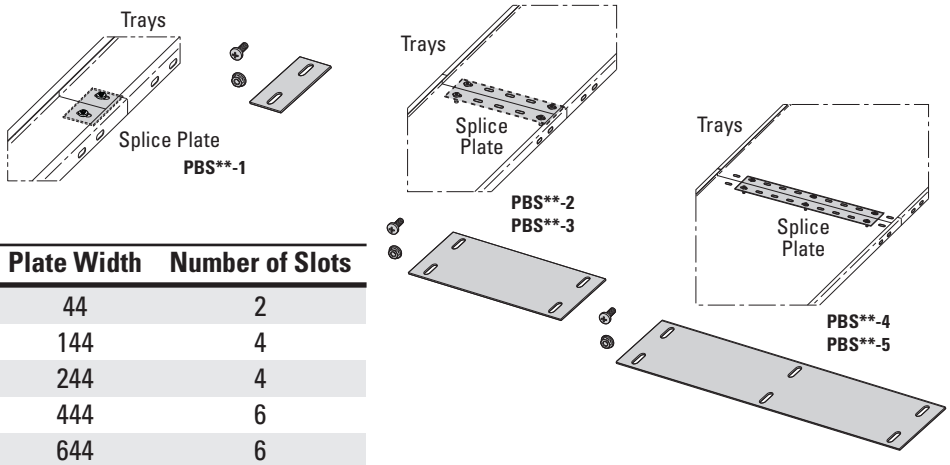

Part Number	Tray Widths	Plate Width	Number of Slots
PBS**-1	50 - 100	44	2
PBS**-2	150 - 300	144	4
PBS**-3	400 - 500	244	4
PBS**-4	600	444	6
PBS**-5	900	644	6

Side Splice Plates (Outside mount)

(Sold in Pairs With Hardware)

- ** Insert P for Pre-Galvanized, G for Hot Dip Galvanized,
  SS6 for Stainless Steel 316, A for Aluminum

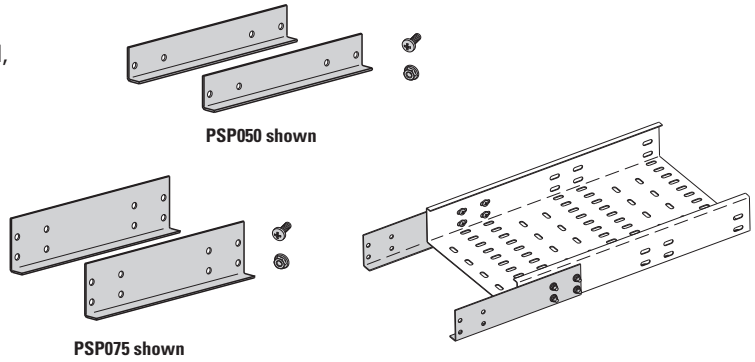

Part Number	Tray Height
PSP025**	25
PSP050**	50
PSP075**	75
PSP100**	100

Horizontal Adjustable Splice Plates (Outside mount)

(Sold in Pairs With Hardware)

- ** Insert P for Pre-Galvanized, G for Hot Dip Galvanized,
  SS6 for Stainless Steel 316, A for Aluminum
- Requires mitering of trays and drilling new splice plate holes on inside angle

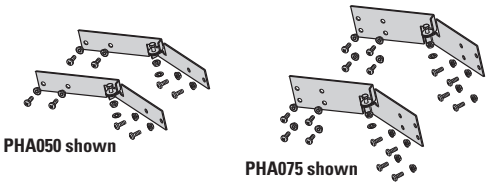

Part Number	Tray Height
PHA025**	25
PHA050**	50
PHA075**	75
PHA100**	100

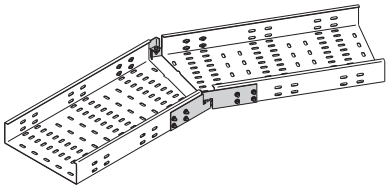

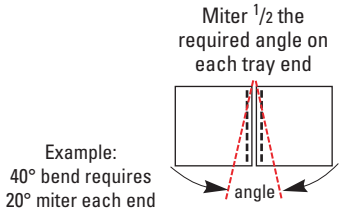

Vertical Adjustable Splice Plates (Outside mount)

(Sold in Pairs With Hardware)

- ** Insert P for Pre-Galvanized, G for Hot Dip Galvanized,
  SS6 for Stainless Steel 316, A for Aluminum

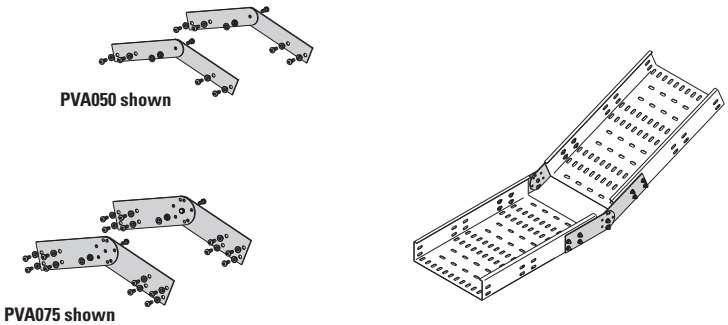

Part Number	Tray Height
PVA025**	25
PVA050**	50
PVA075**	75
PVA100**	100

All dimensions are in millimeters unless otherwise specified.

Right Reducer Splice Plates (Mounted outside of tray)

(Sold as a Set With Hardware)

- ** Insert P for Pre-Galvanized, G for Hot Dip Galvanized, SS6 for Stainless Steel 316, A for Aluminum
- __ Width: Insert width difference between the two trays

Part Number	Tray Height
PRR025**-__	25
PRR050**-__	50
PRR075**-__	75
PRR100**-__	100

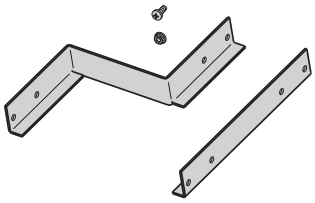

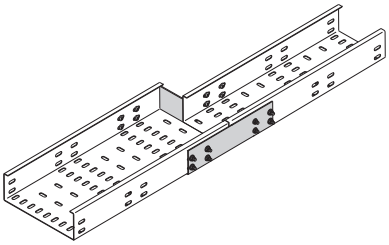

Straight Reducer Splice Plates (Mounted outside of tray)

(Sold as a Set With Hardware)

- ** Insert P for Pre-Galvanized, G for Hot Dip Galvanized, SS6 for Stainless Steel 316, A for Aluminum
- __ Width: Insert width difference between the two trays

Part Number	Tray Height
PSR025**-__	25
PSR050**-__	50
PSR075**-__	75
PSR100**-__	100

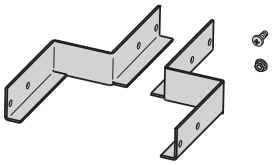

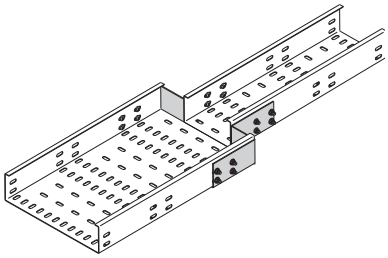

Left Reducer Splice Plates (Mounted outside of tray)

(Sold as a Set With Hardware)

- ** Insert P for Pre-Galvanized, G for Hot Dip Galvanized, SS6 for Stainless Steel 316, A for Aluminum
- __ Width: Insert width difference between the two trays

Part Number	Tray Height
PLR025**-__	25
PLR050**-__	50
PLR075**-__	75
PLR100**-__	100

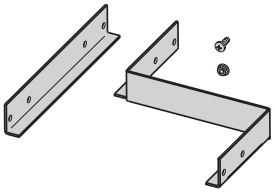

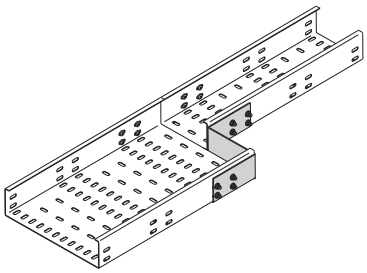

Blind End (Mounted outside of tray)

(Sold Individually With Hardware)

- ** Insert P for Pre-Galvanized, G for Hot Dip Galvanized, SS6 for Stainless Steel 316, A for Aluminum
- __ Tray Width

Part Number	Tray Height
PBE025**-__	25
PBE050**-__	50
PBE075**-__	75
PBE100**-__	100

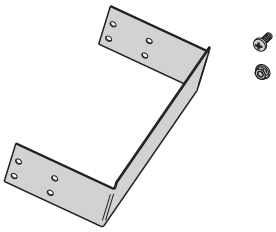

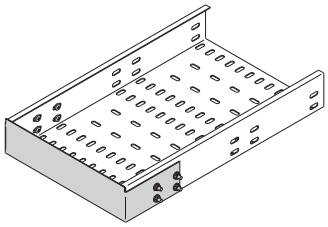

All dimensions are in millimeters unless otherwise specified.

Drop-Out

(Sold Individually With Hardware)

- ** Insert P for Pre-Galvanized, G for Hot Dip Galvanized, SS6 for Stainless Steel 316, A for Aluminum

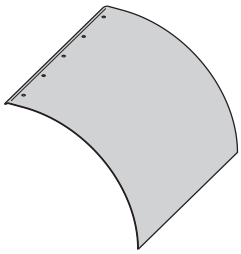

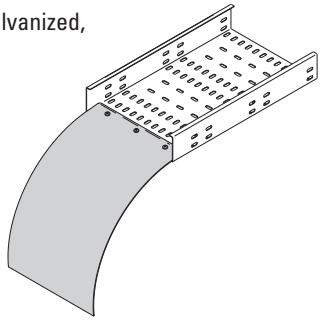

Part Number	Tray Width
PDO**-050	50
PDO**-100	100
PDO**-150	150
PDO**-200	200
PDO**-300	300
PDO**-400	400
PDO**-500	500
PDO**-600	600
PDO**-900	900

Wrap-Around Cover Clamps

(Sold Individually With Hardware)

- ** Insert P for Pre-Galvanized, G for Hot Dip Galvanized, SS6 for Stainless Steel 316, A for Aluminum
- __ Insert Tray Width of 050 = 50mm, 100 = 100mm, 150 = 150mm, 200 = 200mm, 300 = 300mm, 400 = 400mm, 500 = 500mm, 600 = 600mm, 900 = 900mm

Part Number	Tray Height
PWCC025**-__	25 *
PWCC050**-__	50
PWCC075**-__	75
PWCC100**-__	100

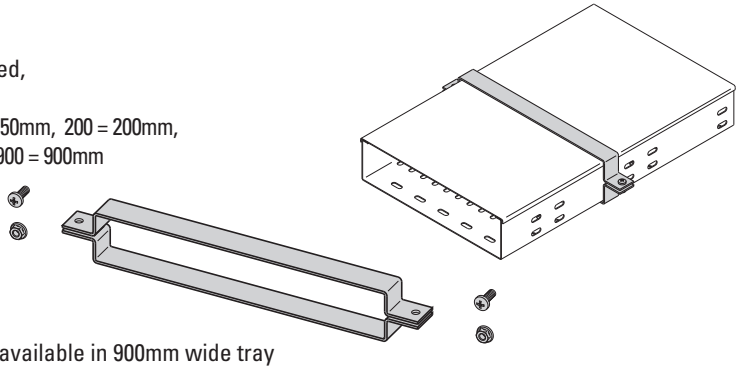

* Is not available in 900mm wide tray

C-Shape Cover Clamps - For (B) & (C) Flanges

(Sold in Pairs With Hardware)

- ** Insert P for Pre-Galvanized, G for Hot Dip Galvanized, SS6 for Stainless Steel 316, A for Aluminum

Part Number	Tray Height
PCCC025**	25
PCCC050**	50
PCCC075**	75
PCCC100**	100

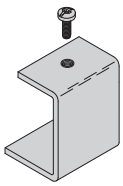

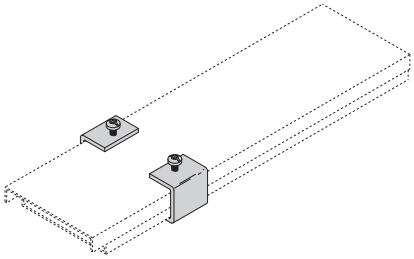

Hold Downs - For (B) & (C) Flanges

(Sold in Pairs With Hardware)

- ** Insert P for Pre-Galvanized, G for Hot Dip Galvanized, SS6 for Stainless Steel 316, A for Aluminum

Part Number	Tray Height
PHD025**	25
PHD050**	50
PHD075**	75
PHD100**	100

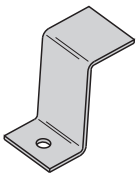

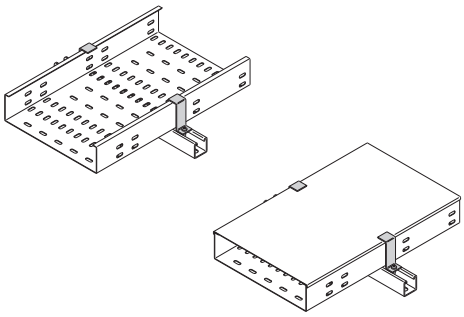

Accessory Hardware

- (*) Insert HDG for Hot Dip Galvanized, SS6 for Stainless Steel 316, or N for Nylon

Part Number	Item
M6 x 16 PHS (*)	Phillips Head Screw
M6 SFHN (*)	Serrated Flange Hex Nut

All dimensions are in millimeters unless otherwise specified.

Perforated & Solid Cable Tray - Fittings

Cable Tray Fittings are designed to support cables as they transition directions.

Note: Perforated slot dimensions and patterns may vary depending on tray size and type. Solid and perforated bottoms are available.

HB
Horizontal Bend
(Perforated)

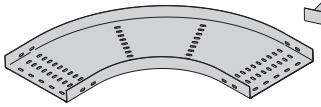

HT
Horizontal Tee
(Solid)

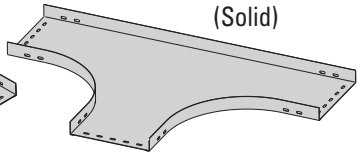

HX
Horizontal Cross
(Perforated)

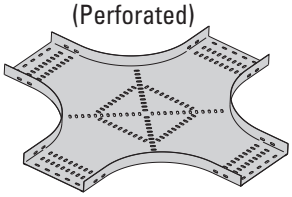

VO
Vertical Outside
Bend (Perforated)

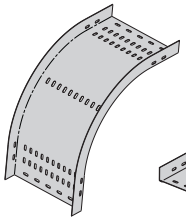

VI
Vertical Inside
Bend (Solid)

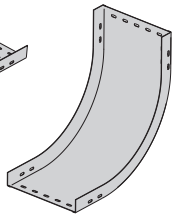

Splice Plate Holes

For dimensions of fitting splice plate holes see the following pages:

Page 4 for 025 tray height
Page 5 for 050 tray height
Page 6 for 075 tray height
Page 7 for 100 tray height

Fittings Part Numbering

Prefix | Suffix

Example: **PF 050 V N SS6 15 HB - 200 - 60 R600**

Tray Type	Height	Bottom Type	Flange Type	Material	Thickness	Type	Width	Angle † (°)	Radius
PF = (Perforated & Solid Cable Tray)	**025** = 25mm **050** = 50mm **075** = 75mm **100** = 100mm	**S** = Solid **V** = Perforated	**N** = No Flange	**P** = Pre-Galv **G** = HDGAF **SS6** = Stainless Type 316 **A** = Aluminum	**15** = 1.5mm **20** = 2.0mm	**HB** **HT** † **HX** † **VO** **VI**	**050** = 50mm Δ **100** = 100mm **150** = 150mm **200** = 200mm **300** = 300mm **400** = 400mm **500** = 500mm **600** = 600mm **900** = 900mm †††	**30** **45** **60** **90**	**R300** = 300mm **R600** = 600mm

† No angle designation required on these fittings. See fitting page when creating part numbers.
††† Not available on 025 tray heights Δ Only available on 025 and 050 tray heights

Reducer Fittings Part Numbering

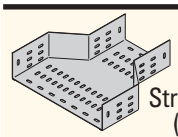

SR
Straight Reducer
(Perforated)

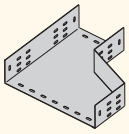

LR
Left Reducer
(Solid)

Prefix | Suffix

Example: **PF 050 V N SS6 15 RR - 600 - 300**

Tray Type	Height	Bottom Type	Flange Type	Material	Thickness	Type	Width 1	Width 2
PF = (Perforated & Solid Cable Tray)	**025** = 25mm **050** = 50mm **075** = 75mm **100** = 100mm	**S** = Solid **V** = Perforated	**N** = No Flange	**P** = Pre-Galv **G** = HDGAF **SS6** = Stainless Type 316 **A** = Aluminum	**15** = 1.5mm **20** = 2.0mm	**RR** † **LR** † **SR** †	**100** = 100mm **150** = 150mm **200** = 200mm **300** = 300mm **400** = 400mm **500** = 500mm **600** = 600mm **900** = 900mm †††	**050** = 50mm Δ **100** = 100mm **150** = 150mm **200** = 200mm **300** = 300mm **400** = 400mm **500** = 500mm **600** = 600mm

† No angle designation required on these fittings. See fitting page when creating part numbers.
††† Not available on 025 tray heights Δ Only available on 025 and 050 tray heights

All dimensions are in millimeters unless otherwise specified.

Horizontal Bends 90° (HB)

Splice plates not supplied with fittings.
Order standard splice plates separately from page PS-8.
One (1) pair required to connect to system.

Note:
Perforated slot dimensions and patterns may vary depending on tray size and type.

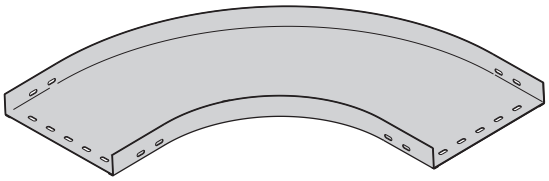

90˚ Horizontal Bend Solid

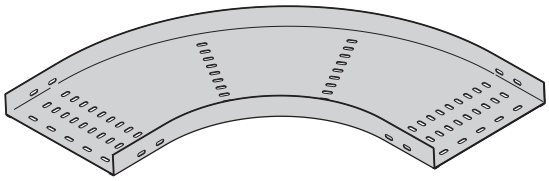

90˚ Horizontal Bend Perforated

Bend Radius R mm	Tray Width W mm	90˚ Horizontal Bend Dimensions Formed Radius Fittings Catalog No.	A mm	B mm
300	50	**PF(Prefix)HB-050-90R300**	490	490
	100	**PF(Prefix)HB-100-90R300**	540	540
	150	**PF(Prefix)HB-150-90R300**	590	590
	200	**PF(Prefix)HB-200-90R300**	640	640
	300	**PF(Prefix)HB-300-90R300**	740	740
	400	**PF(Prefix)HB-400-90R300**	840	840
	500	**PF(Prefix)HB-500-90R300**	940	940
	600	**PF(Prefix)HB-600-90R300**	1040	1040
	900	**PF(Prefix)HB-900-90R300**	1340	1340
600	50	**PF(Prefix)HB-050-90R600**	790	790
	100	**PF(Prefix)HB-100-90R600**	840	840
	150	**PF(Prefix)HB-150-90R600**	890	890
	200	**PF(Prefix)HB-200-90R600**	940	940
	300	**PF(Prefix)HB-300-90R600**	1040	1040
	400	**PF(Prefix)HB-400-90R600**	1140	1140
	500	**PF(Prefix)HB-500-90R600**	1240	1240
	600	**PF(Prefix)HB-600-90R600**	1340	1340
	900	**PF(Prefix)HB-900-90R600**	1640	1640

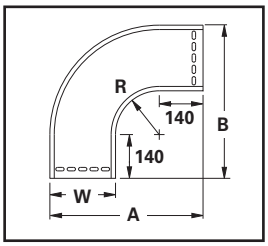

(Prefix) See page PS-11 for catalog number prefix and splice plate hole information.
Width dimensions are to inside wall. Manufacturing tolerances apply to all dimensions.

All dimensions are in millimeters unless otherwise specified.

Note:
Perforated slot dimensions and patterns may vary depending on tray size and type.

Horizontal Bends 60° (HB)

Splice plates not supplied with fittings.
Order standard splice plates separately from page PS-8.
One (1) pair required to connect to system.

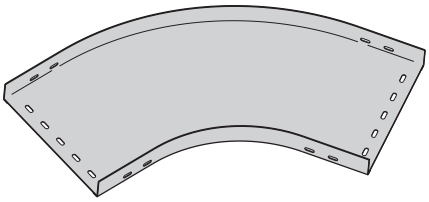

60˚ Horizontal Bend
Solid

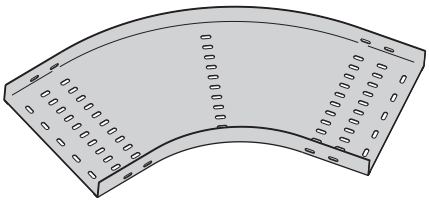

60˚ Horizontal Bend
Perforated

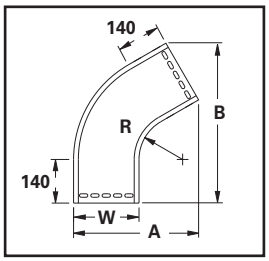

Bend Radius R mm	Tray Width W mm	60˚ Horizontal Bend Dimensions Formed Radius Fittings Catalog No.	A mm	B mm
300	50	**PF(Prefix)HB-050-60R300**	321	513
	100	**PF(Prefix)HB-100-60R300**	371	556
	150	**PF(Prefix)HB-150-60R300**	421	600
	200	**PF(Prefix)HB-200-60R300**	471	643
	300	**PF(Prefix)HB-300-60R300**	571	730
	400	**PF(Prefix)HB-400-60R300**	671	816
	500	**PF(Prefix)HB-500-60R300**	771	903
	600	**PF(Prefix)HB-600-60R300**	871	989
	900	**PF(Prefix)HB-900-60R300**	1171	1249
600	50	**PF(Prefix)HB-050-60R600**	471	773
	100	**PF(Prefix)HB-100-60R600**	521	816
	150	**PF(Prefix)HB-150-60R600**	571	850
	200	**PF(Prefix)HB-200-60R600**	621	903
	300	**PF(Prefix)HB-300-60R600**	721	989
	400	**PF(Prefix)HB-400-60R600**	821	1076
	500	**PF(Prefix)HB-500-60R600**	921	1163
	600	**PF(Prefix)HB-600-60R600**	1021	1249
	900	**PF(Prefix)HB-900-60R600**	1321	1509

(Prefix) See page PS-11 for catalog number prefix and splice plate hole information.
Width dimensions are to inside wall. Manufacturing tolerances apply to all dimensions.

Horizontal Bends 45° (HB)

Splice plates not supplied with fittings.
Order standard splice plates separately from page PS-8.
One (1) pair required to connect to system.

Note:
Perforated slot dimensions and patterns may vary depending on tray size and type.

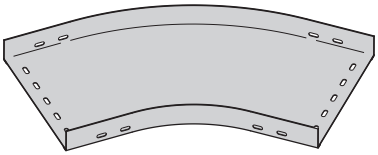

45˚ Horizontal Bend Solid

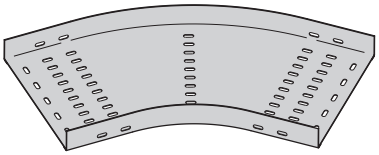

45˚ Horizontal Bend Perforated

Bend Radius R mm	Tray Width W mm	45˚ Horizontal Bend Dimensions Formed Radius Fittings Catalog No.	A mm	B mm
300	50	**PF(Prefix)HB-050-45R300**	237	486
	100	**PF(Prefix)HB-100-45R300**	287	522
	150	**PF(Prefix)HB-150-45R300**	337	557
	200	**PF(Prefix)HB-200-45R300**	387	593
	300	**PF(Prefix)HB-300-45R300**	487	663
	400	**PF(Prefix)HB-400-45R300**	587	734
	500	**PF(Prefix)HB-500-45R300**	687	805
	600	**PF(Prefix)HB-600-45R300**	787	875
	900	**PF(Prefix)HB-900-45R300**	1087	1088
600	50	**PF(Prefix)HB-050-45R600**	325	699
	100	**PF(Prefix)HB-100-45R600**	375	734
	150	**PF(Prefix)HB-150-45R600**	425	769
	200	**PF(Prefix)HB-200-45R600**	475	805
	300	**PF(Prefix)HB-300-45R600**	575	875
	400	**PF(Prefix)HB-400-45R600**	675	946
	500	**PF(Prefix)HB-500-45R600**	775	1017
	600	**PF(Prefix)HB-600-45R600**	875	1088
	900	**PF(Prefix)HB-900-45R600**	1175	1300

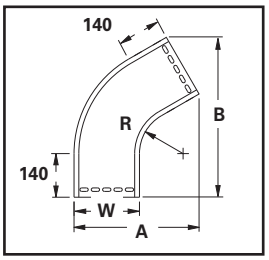

(Prefix) See page PS-11 for catalog number prefix and splice plate hole information.
Width dimensions are to inside wall. Manufacturing tolerances apply to all dimensions.

All dimensions are in millimeters unless otherwise specified.

Note:
Perforated slot dimensions and patterns may vary depending on tray size and type.

Horizontal Bends 30° (HB)

Splice plates not supplied with fittings.
Order standard splice plates separately from page PS-8.
One (1) pair required to connect to system.

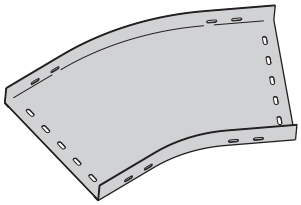

30˚ Horizontal Bend Solid

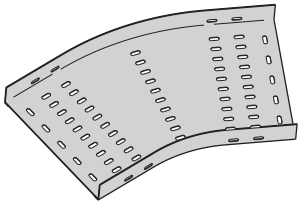

30˚ Horizontal Bend Perforated

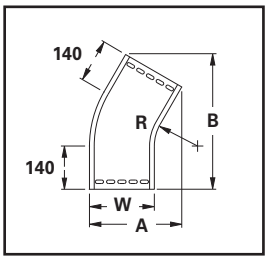

Bend Radius R mm	Tray Width W mm	30˚ Horizontal Bend Dimensions Formed Radius Fittings Catalog No.	A mm	B mm
300	50	**PF(Prefix)HB-050-30R300**	160	436
	100	**PF(Prefix)HB-100-30R300**	210	461
	150	**PF(Prefix)HB-150-30R300**	260	486
	200	**PF(Prefix)HB-200-30R300**	310	511
	300	**PF(Prefix)HB-300-30R300**	410	561
	400	**PF(Prefix)HB-400-30R300**	510	611
	500	**PF(Prefix)HB-500-30R300**	610	661
	600	**PF(Prefix)HB-600-30R300**	710	711
	900	**PF(Prefix)HB-900-30R300**	1010	861
600	50	**PF(Prefix)HB-050-30R600**	200	586
	100	**PF(Prefix)HB-100-30R600**	250	611
	150	**PF(Prefix)HB-150-30R600**	300	636
	200	**PF(Prefix)HB-200-30R600**	350	661
	300	**PF(Prefix)HB-300-30R600**	450	711
	400	**PF(Prefix)HB-400-30R600**	550	761
	500	**PF(Prefix)HB-500-30R600**	650	811
	600	**PF(Prefix)HB-600-30R600**	750	861
	900	**PF(Prefix)HB-900-30R600**	1050	1011

(Prefix) See page 1PS-1 for catalog number prefix and splice plate hole information.
Width dimensions are to inside wall. Manufacturing tolerances apply to all dimensions.

Horizontal Tee (HT)

Splice plates not supplied with fittings.
Order standard splice plates separately from page PS-8.
Two (2) pair required to connect to system.

Note:
Perforated slot dimensions and patterns may vary depending on tray size and type.

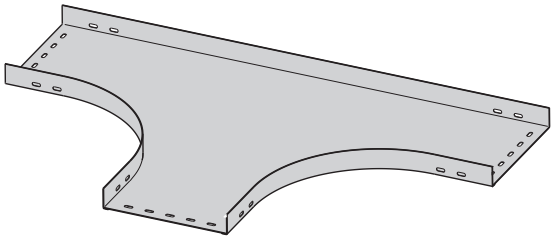

Horizontal Tee Solid

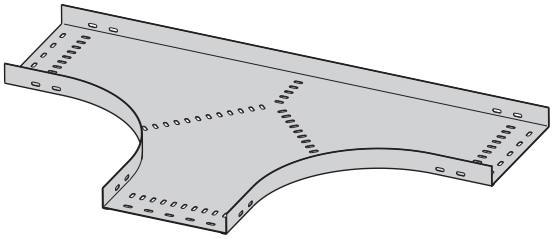

Horizontal Tee Perforated

Bend Radius R mm	Tray Width W mm	Horizontal Cross Dimensions Formed Radius Fittings Catalog No.	A mm	B mm
300	50	**PF(Prefix)HT-050-R300**	490	930
	100	**PF(Prefix)HT-100-R300**	540	980
	150	**PF(Prefix)HT-150-R300**	590	1030
	200	**PF(Prefix)HT-200-R300**	640	1080
	300	**PF(Prefix)HT-300-R300**	740	1180
	400	**PF(Prefix)HT-400-R300**	840	1280
	500	**PF(Prefix)HT-500-R300**	940	1380
	600	**PF(Prefix)HT-600-R300**	1040	1480
	900	**PF(Prefix)HT-900-R300**	1340	1780
600	50	**PF(Prefix)HT-050-R600**	790	1530
	100	**PF(Prefix)HT-100-R600**	840	1580
	150	**PF(Prefix)HT-150-R600**	890	1630
	200	**PF(Prefix)HT-200-R600**	940	1680
	300	**PF(Prefix)HT-300-R600**	1040	1780
	400	**PF(Prefix)HT-400-R600**	1140	1880
	500	**PF(Prefix)HT-500-R600**	1240	1980
	600	**PF(Prefix)HT-600-R600**	1340	2080
	900	**PF(Prefix)HT-900-R600**	1640	2380

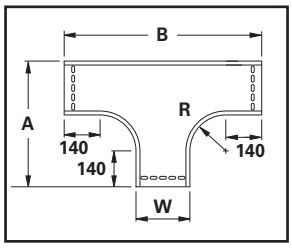

(Prefix) See page PS-11 for catalog number prefix and splice plate hole information.
Width dimensions are to inside wall. Manufacturing tolerances apply to all dimensions.

All dimensions are in millimeters unless otherwise specified.

Note:
Perforated slot dimensions and patterns may vary depending on tray size and type.

Horizontal Cross (HX)

Splice plates not supplied with fittings.
Order standard splice plates separately from page PS-8.
Three (3) pair required to connect to system.

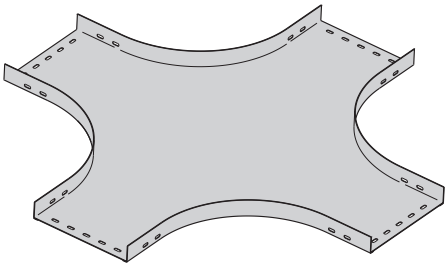

Horizontal Cross
Solid

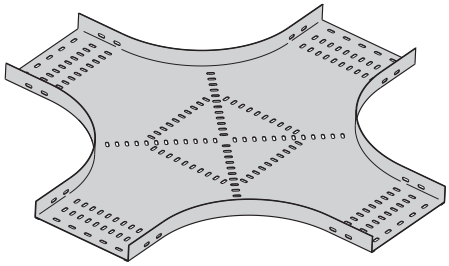

Horizontal Cross
Perforated

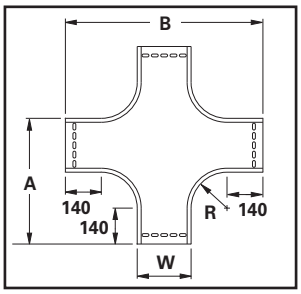

Bend Radius R mm	Tray Width W mm	Horizontal Cross Dimensions Formed Radius Fittings Catalog No.	A mm	B mm
300	50	PF(Prefix)HX-050-R300	490	930
	100	PF(Prefix)HX-100-R300	540	980
	150	PF(Prefix)HX-150-R300	590	1030
	200	PF(Prefix)HX-200-R300	640	1080
	300	PF(Prefix)HX-300-R300	740	1180
	400	PF(Prefix)HX-400-R300	840	1280
	500	PF(Prefix)HX-500-R300	940	1380
	600	PF(Prefix)HX-600-R300	1040	1480
	900	PF(Prefix)HX-900-R300	1340	1780
600	50	PF(Prefix)HX-050-R600	790	1530
	100	PF(Prefix)HX-100-R600	840	1580
	150	PF(Prefix)HX-150-R600	890	1630
	200	PF(Prefix)HX-200-R600	940	1680
	300	PF(Prefix)HX-300-R600	1040	1780
	400	PF(Prefix)HX-400-R600	1140	1880
	500	PF(Prefix)HX-500-R600	1240	1980
	600	PF(Prefix)HX-600-R600	1340	2080
	900	PF(Prefix)HX-900-R600	1640	2380

(Prefix) See page PS-11 for catalog number prefix and splice plate hole information.
Width dimensions are to inside wall. Manufacturing tolerances apply to all dimensions.

Left Reducer (LR)
Straight Reducer (SR)
Right Reducer (RR)

Splice plates not supplied with fittings.
Order standard splice plates separately from page PS-8.
One (1) pair required to connect to system.

Note:
Perforated slot dimensions and patterns may vary depending on tray size and type.

Reducer Part Numbering

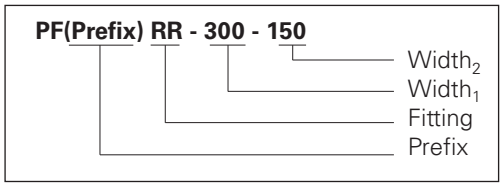

Tray Width W_1 mm	W_2 mm	Left Hand Reducer Catalog No.	Straight Reducer Catalog No.	Right Hand Reducer Catalog No.
100	50	PF(Prefix)LR-100-050	PF(Prefix)SR-100-050	PF(Prefix)RR-100-050
150	50	PF(Prefix)LR-150-050	PF(Prefix)SR-150-050	PF(Prefix)RR-150-050
	100	PF(Prefix)LR-150-100	PF(Prefix)SR-150-100	PF(Prefix)RR-150-100
200	50	PF(Prefix)LR-200-050	PF(Prefix)SR-200-050	PF(Prefix)RR-200-050
	100	PF(Prefix)LR-200-100	PF(Prefix)SR-200-100	PF(Prefix)RR-200-100
	150	PF(Prefix)LR-200-150	PF(Prefix)SR-200-150	PF(Prefix)RR-200-150
300	50	PF(Prefix)LR-300-050	PF(Prefix)SR-300-050	PF(Prefix)RR-300-050
	100	PF(Prefix)LR-300-100	PF(Prefix)SR-300-100	PF(Prefix)RR-300-100
	150	PF(Prefix)LR-300-150	PF(Prefix)SR-300-150	PF(Prefix)RR-300-150
	200	PF(Prefix)LR-300-200	PF(Prefix)SR-300-200	PF(Prefix)RR-300-200
400	50	PF(Prefix)LR-400-050	PF(Prefix)SR-400-050	PF(Prefix)RR-400-050
	100	PF(Prefix)LR-400-100	PF(Prefix)SR-400-100	PF(Prefix)RR-400-100
	150	PF(Prefix)LR-400-150	PF(Prefix)SR-400-150	PF(Prefix)RR-400-150
	200	PF(Prefix)LR-400-200	PF(Prefix)SR-400-200	PF(Prefix)RR-400-200
	300	PF(Prefix)LR-400-300	PF(Prefix)SR-400-300	PF(Prefix)RR-400-300
500	50	PF(Prefix)LR-500-050	PF(Prefix)SR-500-050	PF(Prefix)RR-500-050
	100	PF(Prefix)LR-500-100	PF(Prefix)SR-500-100	PF(Prefix)RR-500-100
	150	PF(Prefix)LR-500-150	PF(Prefix)SR-500-150	PF(Prefix)RR-500-150
	200	PF(Prefix)LR-500-200	PF(Prefix)SR-500-200	PF(Prefix)RR-500-200
	300	PF(Prefix)LR-500-300	PF(Prefix)SR-500-300	PF(Prefix)RR-500-300
	400	PF(Prefix)LR-500-400	PF(Prefix)SR-500-400	PF(Prefix)RR-500-400
600	50	PF(Prefix)LR-600-050	PF(Prefix)SR-600-050	PF(Prefix)RR-600-050
	100	PF(Prefix)LR-600-100	PF(Prefix)SR-600-100	PF(Prefix)RR-600-100
	150	PF(Prefix)LR-600-150	PF(Prefix)SR-600-150	PF(Prefix)RR-600-150
	200	PF(Prefix)LR-600-200	PF(Prefix)SR-600-200	PF(Prefix)RR-600-200
	300	PF(Prefix)LR-600-300	PF(Prefix)SR-600-300	PF(Prefix)RR-600-300
	400	PF(Prefix)LR-600-400	PF(Prefix)SR-600-400	PF(Prefix)RR-600-400
	500	PF(Prefix)LR-600-500	PF(Prefix)SR-600-500	PF(Prefix)RR-600-500
900	50	PF(Prefix)LR-900-050	PF(Prefix)SR-900-050	PF(Prefix)RR-900-050
	100	PF(Prefix)LR-900-100	PF(Prefix)SR-900-100	PF(Prefix)RR-900-100
	150	PF(Prefix)LR-900-150	PF(Prefix)SR-900-150	PF(Prefix)RR-900-150
	200	PF(Prefix)LR-900-200	PF(Prefix)SR-900-200	PF(Prefix)RR-900-200
	300	PF(Prefix)LR-900-300	PF(Prefix)SR-900-300	PF(Prefix)RR-900-300
	400	PF(Prefix)LR-900-400	PF(Prefix)SR-900-400	PF(Prefix)RR-900-400
	500	PF(Prefix)LR-900-500	PF(Prefix)SR-900-500	PF(Prefix)RR-900-500
	600	PF(Prefix)LR-900-600	PF(Prefix)SR-900-600	PF(Prefix)RR-900-600

Left Reducer LR

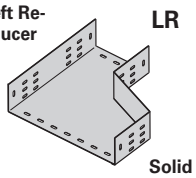

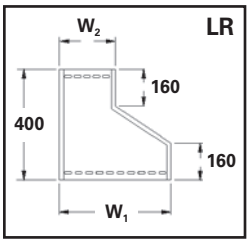

Straight Reducer SR

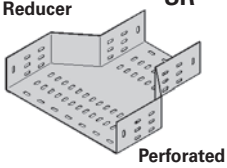

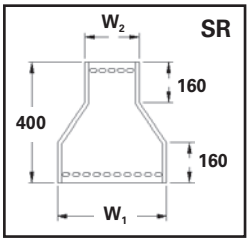

Right Reducer RR

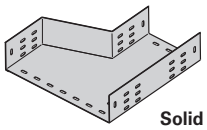

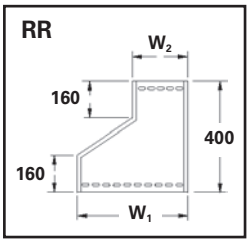

(Prefix) See page PS-11 for catalog number prefix and splice plate hole information.
Width dimensions are to inside wall. Manufacturing tolerances apply to all dimensions.

Note:
Perforated slot dimensions and patterns may vary depending on tray size and type.

Vertical Bends 90˚ (VO, VI)

Splice plates not supplied with fittings.
Order standard splice plates separately from page PS-8.
One (1) pair required to connect to system.

90˚ Vertical Outside

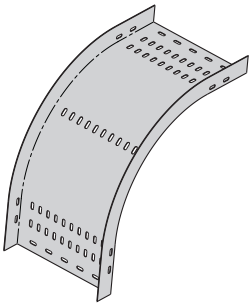

Perforated

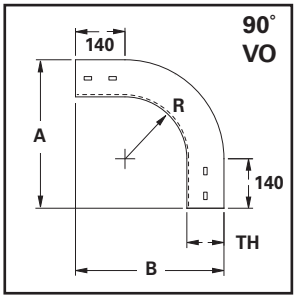

90˚ Vertical Inside

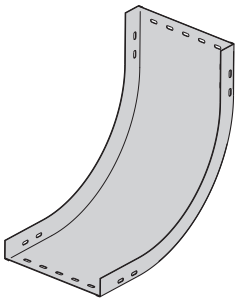

Solid

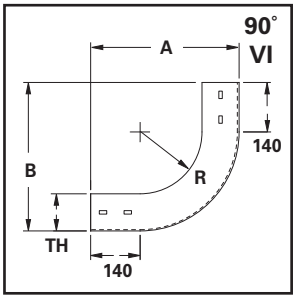

90˚

Bend Radius R	Tray Width	(*) Insert "VO" for Vert. Outside Bend "VI" for Vert. Inside Bend	VO & VI Tray Height (TH)							
			25mm		50mm		75mm		100mm	
			A	B	A	B	A	B	A	B
mm	mm	Catalog No.	mm	mm	mm	mm	mm	mm	mm	mm
	50	**PF(Prefix)(*)-050-90R300**	465	465	490	490	NA	NA	NA	NA
	100	**PF(Prefix)(*)-100-90R300**	465	465	490	490	515	515	540	540
	150	**PF(Prefix)(*)-150-90R300**	465	465	490	490	515	515	540	540
	200	**PF(Prefix)(*)-200-90R300**	465	465	490	490	515	515	540	540
300	300	**PF(Prefix)(*)-300-90R300**	465	465	490	490	515	515	540	540
	400	**PF(Prefix)(*)-400-90R300**	465	465	490	490	515	515	540	540
	500	**PF(Prefix)(*)-500-90R300**	465	465	490	490	515	515	540	540
	600	**PF(Prefix)(*)-600-90R300**	465	465	490	490	515	515	540	540
	900	**PF(Prefix)(*)-900-90R300**	NA	NA	490	490	515	515	540	540
	50	**PF(Prefix)(*)-050-90R600**	765	765	790	790	NA	NA	NA	NA
	100	**PF(Prefix)(*)-100-90R600**	765	765	790	790	815	815	840	840
	150	**PF(Prefix)(*)-150-90R600**	765	765	790	790	815	815	840	840
	200	**PF(Prefix)(*)-200-90R600**	765	765	790	790	815	815	840	840
600	300	**PF(Prefix)(*)-300-90R600**	765	765	790	790	815	815	840	840
	400	**PF(Prefix)(*)-400-90R600**	765	765	790	790	815	815	840	840
	500	**PF(Prefix)(*)-500-90R600**	765	765	790	790	815	815	840	840
	600	**PF(Prefix)(*)-600-90R600**	765	765	790	790	815	815	840	840
	900	**PF(Prefix)(*)-900-90R600**	NA	NA	790	790	815	815	840	840

(Prefix) See page PS-11 for catalog number prefix and splice plate hole information.
Width dimensions are to inside wall. Manufacturing tolerances apply to all dimensions.

NA = Not Available

Vertical Bends 60˚ (VO, VI)

Splice plates not supplied with fittings.
Order standard splice plates separately from page PS-8.
One (1) pair required to connect to system.

Note:
Perforated slot dimensions and patterns may vary depending on tray size and type.

60˚ Vertical Outside

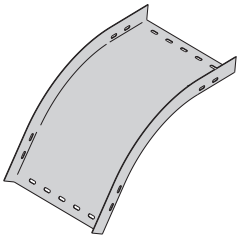

Solid

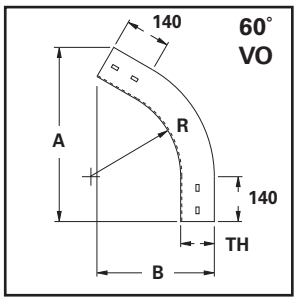

60˚ Vertical Inside

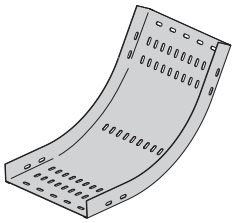

Perforated

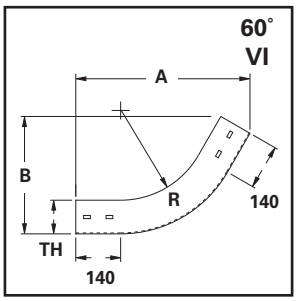

60˚

Bend Radius R	Tray Width	(*) Insert "VO" for Vert. Outside Bend "VI" for Vert. Inside Bend	VO & VI Tray Height (TH)							
			25mm		50mm		75mm		100mm	
			A	B	A	B	A	B	A	B
mm	mm	Catalog No.	mm	mm	mm	mm	mm	mm	mm	mm
	50	**PF(Prefix)(*)-050-60R300**	491	296	513	321	NA	NA	NA	NA
	100	**PF(Prefix)(*)-100-60R300**	491	296	513	321	535	346	556	371
	150	**PF(Prefix)(*)-150-60R300**	491	296	513	321	535	346	556	371
	200	**PF(Prefix)(*)-200-60R300**	491	296	513	321	535	346	556	371
300	300	**PF(Prefix)(*)-300-60R300**	491	296	513	321	535	346	556	371
	400	**PF(Prefix)(*)-400-60R300**	491	296	513	321	535	346	556	371
	500	**PF(Prefix)(*)-500-60R300**	491	296	513	321	535	346	556	371
	600	**PF(Prefix)(*)-600-60R300**	491	296	513	321	535	346	556	371
	900	**PF(Prefix)(*)-900-60R300**	NA	NA	513	321	535	346	556	371
	50	**PF(Prefix)(*)-050-60R600**	751	446	773	471	NA	NA	NA	NA
	100	**PF(Prefix)(*)-100-60R600**	751	446	773	471	795	496	816	521
	150	**PF(Prefix)(*)-150-60R600**	751	446	773	471	795	496	816	521
	200	**PF(Prefix)(*)-200-60R600**	751	446	773	471	795	496	816	521
600	300	**PF(Prefix)(*)-300-60R600**	751	446	773	471	795	496	816	521
	400	**PF(Prefix)(*)-400-60R600**	751	446	773	471	795	496	816	521
	500	**PF(Prefix)(*)-500-60R600**	751	446	773	471	795	496	816	521
	600	**PF(Prefix)(*)-600-60R600**	751	446	773	471	795	496	816	521
	900	**PF(Prefix)(*)-900-60R600**	NA	NA	773	471	795	496	816	521

(Prefix) See page PS-11 for catalog number prefix and splice plate hole information.
Width dimensions are to inside wall. Manufacturing tolerances apply to all dimensions.

NA = Not Available

Note:
Perforated slot dimensions and patterns may vary depending on tray size and type.

Vertical Bends 45˚ (VO, VI)

Splice plates not supplied with fittings.
Order standard splice plates separately from page PS-8.
One (1) pair required to connect to system.

45˚ Vertical Outside

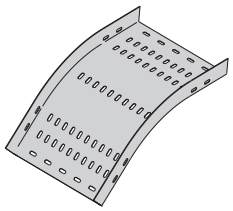

Perforated

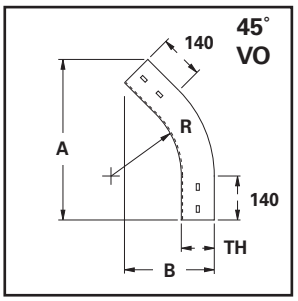

45˚ Vertical Inside

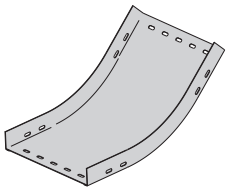

Solid

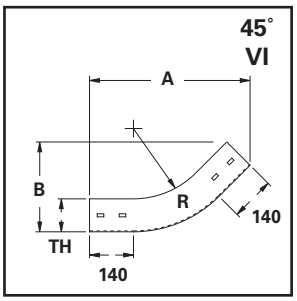

45˚

Bend Radius R	Tray Width	(*) Insert "VO" for Vert. Outside Bend "VI" for Vert. Inside Bend Catalog No.	VO & VI Tray Height (TH)							
			25mm		50mm		75mm		100mm	
			A	B	A	B	A	B	A	B
mm	mm		mm	mm	mm	mm	mm	mm	mm	mm
300	50	PF(Prefix)(*)-050-45R300	469	212	486	237	NA	NA	NA	NA
	100	PF(Prefix)(*)-100-45R300	469	212	486	237	504	262	522	287
	150	PF(Prefix)(*)-150-45R300	469	212	486	237	504	262	522	287
	200	PF(Prefix)(*)-200-45R300	469	212	486	237	504	262	522	287
	300	PF(Prefix)(*)-300-45R300	469	212	486	237	504	262	522	287
	400	PF(Prefix)(*)-400-45R300	469	212	486	237	504	262	522	287
	500	PF(Prefix)(*)-500-45R300	469	212	486	237	504	262	522	287
	600	PF(Prefix)(*)-600-45R300	469	212	486	237	504	262	522	287
	900	PF(Prefix)(*)-900-45R300	NA	NA	486	237	504	262	522	287
600	50	PF(Prefix)(*)-050-45R600	681	300	699	325	NA	NA	NA	NA
	100	PF(Prefix)(*)-100-45R600	681	300	699	325	716	350	734	375
	150	PF(Prefix)(*)-150-45R600	681	300	699	325	716	350	734	375
	200	PF(Prefix)(*)-200-45R600	681	300	699	325	716	350	734	375
	300	PF(Prefix)(*)-300-45R600	681	300	699	325	716	350	734	375
	400	PF(Prefix)(*)-400-45R600	681	300	699	325	716	350	734	375
	500	PF(Prefix)(*)-500-45R600	681	300	699	325	716	350	734	375
	600	PF(Prefix)(*)-600-45R600	681	300	699	325	716	350	734	375
	900	PF(Prefix)(*)-900-45R600	NA	NA	699	325	716	350	734	375

(Prefix) See page PS-11 for catalog number prefix and splice plate hole information.
Width dimensions are to inside wall. Manufacturing tolerances apply to all dimensions.

NA = Not Available

Vertical Bends 30˚ (VO, VI)

Splice plates not supplied with fittings.
Order standard splice plates separately from page PS-8.
One (1) pair required to connect to system.

Note:
Perforated slot dimensions and patterns may vary depending on tray size and type.

30˚ Vertical Outside

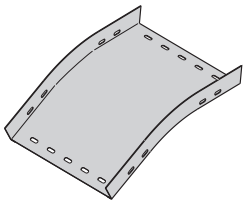

Solid

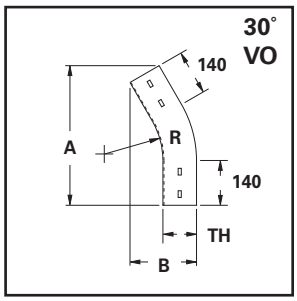

30˚ Vertical Inside

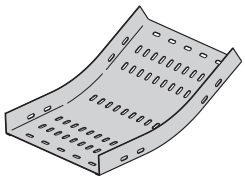

Perforated

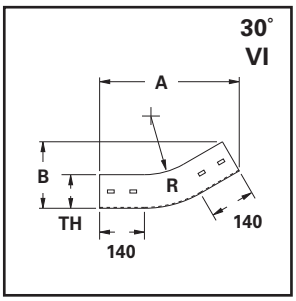

30˚

Bend Radius R	Tray Width	(*) Insert "VO" for Vert. Outside Bend "VI" for Vert. Inside Bend	VO & VI Tray Height (TH)							
			25mm		50mm		75mm		100mm	
			A	B	A	B	A	B	A	B
mm	mm	Catalog No.	mm	mm	mm	mm	mm	mm	mm	mm
	50	**PF(Prefix)(*)-050-30R300**	424	135	436	160	NA	NA	NA	NA
	100	**PF(Prefix)(*)-100-30R300**	424	135	436	160	449	185	461	210
	150	**PF(Prefix)(*)-150-30R300**	424	135	436	160	449	185	461	210
	200	**PF(Prefix)(*)-200-30R300**	424	135	436	160	449	185	461	210
300	300	**PF(Prefix)(*)-300-30R300**	424	135	436	160	449	185	461	210
	400	**PF(Prefix)(*)-400-30R300**	424	135	436	160	449	185	461	210
	500	**PF(Prefix)(*)-500-30R300**	424	135	436	160	449	185	461	210
	600	**PF(Prefix)(*)-600-30R300**	424	135	436	160	449	185	461	210
	900	**PF(Prefix)(*)-900-30R300**	NA	NA	436	160	449	185	461	210
	50	**PF(Prefix)(*)-050-30R600**	574	175	586	200	NA	NA	NA	NA
	100	**PF(Prefix)(*)-100-30R600**	574	175	586	200	599	225	611	250
	150	**PF(Prefix)(*)-150-30R600**	574	175	586	200	599	225	611	250
	200	**PF(Prefix)(*)-200-30R600**	574	175	586	200	599	225	611	250
600	300	**PF(Prefix)(*)-300-30R600**	574	175	586	200	599	225	611	250
	400	**PF(Prefix)(*)-400-30R600**	574	175	586	200	599	225	611	250
	500	**PF(Prefix)(*)-500-30R600**	574	175	586	200	599	225	611	250
	600	**PF(Prefix)(*)-600-30R600**	574	175	586	200	599	225	611	250
	900	**PF(Prefix)(*)-900-30R600**	N/A	N/A	586	200	599	225	611	250

(Prefix) See page PS-11 for catalog number prefix and splice plate hole information.
Width dimensions are to inside wall. Manufacturing tolerances apply to all dimensions.

NA = Not Available

Straight Section Covers

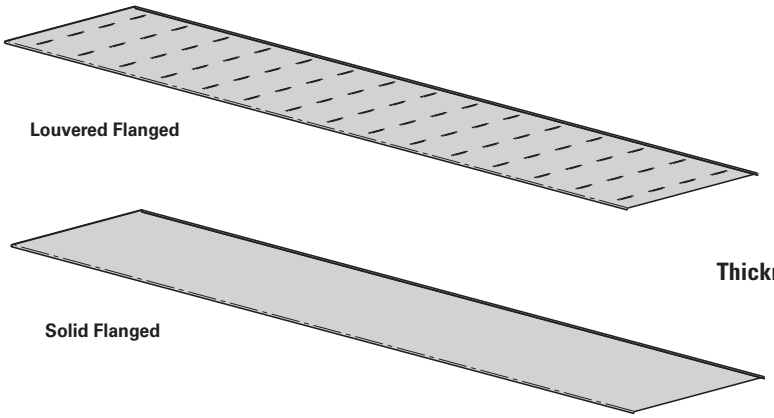

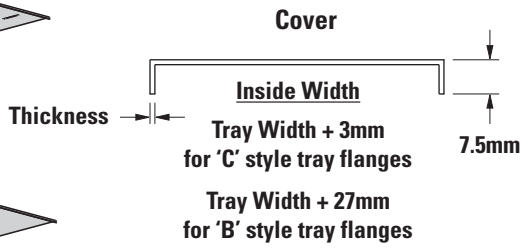

A full range of covers is available for straight sections.

Solid flanged covers should be used when maximum enclosure of the cable is desired and no accumulation of heat is expected.

Louvered flanged covers should be used when heat dissipation is required.

Flanged covers have a 7.5mm flange.

Cover clamps are not included with the cover and must be ordered separately.

Straight Section Cover Part Numbering

Prefix — Suffix

Example: **PCF S C P15 SS - 300 - 3000**

Cover Type	Top Style	Tray Flange Type	Material & Thickness	Cover Type	Width	Length
PCF = (Flanged Tray Cover)	**S** = Solid **L** = Louvered	**C** = Inside Flange **B** = Outside Flange	**P15** = Pre-Galv, 1.5mm **G12** = HDGAF, 1.2mm * **G15** = HDGAF, 1.5mm * **SS615** = Stainless, 1.5mm Type 316 **A10** = Aluminum, 1.0mm	**SS** = Straight Section	**050** = 50mm **100** = 100mm **150** = 150mm **200** = 200mm **300** = 300mm **400** = 400mm **500** = 500mm **600** = 600mm **900** = 900mm	**1500** = 1.5m * **3000** = 3.0m

* Hot-Dip Galvanized covers offered in 1.5m lengths only.

All dimensions are in millimeters unless otherwise specified.

Fitting Covers

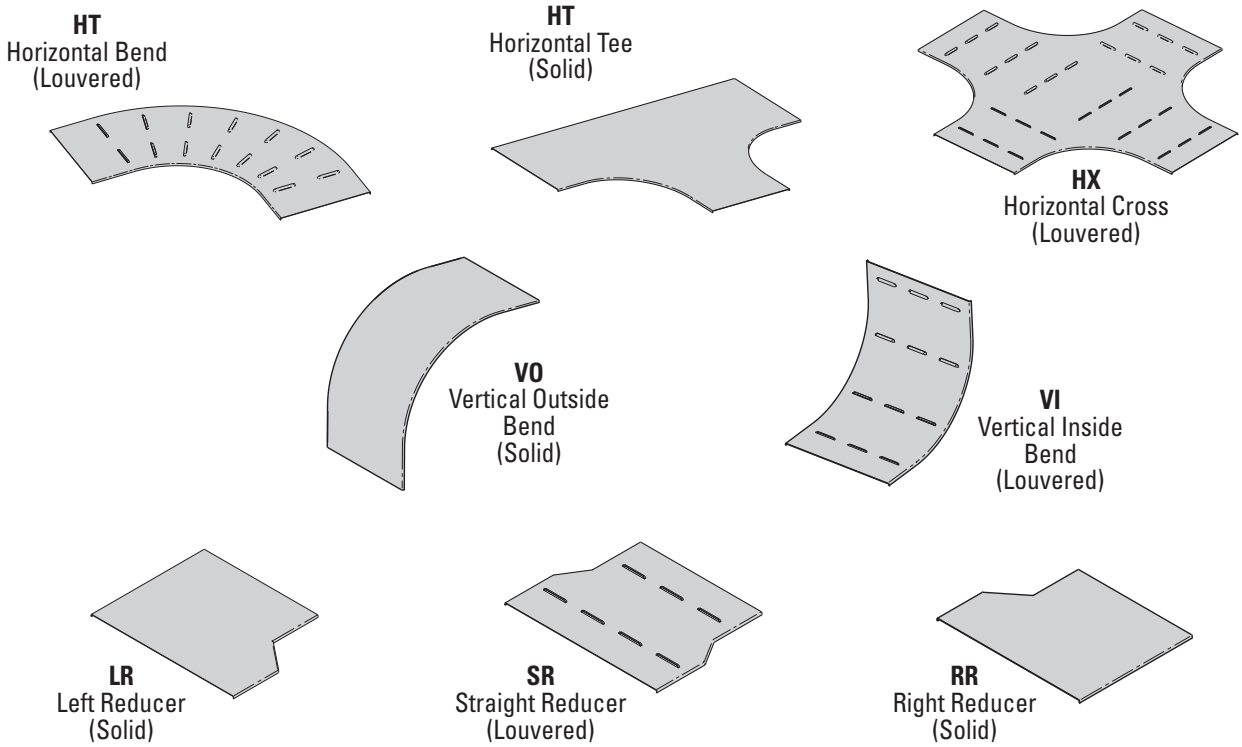

A full range of covers are available for fittings.

Solid flanged covers should be used when maximum enclosure of the cable is desired and no accumulation of heat is expected.

Louvered flanged covers should be used when heat dissipation is required.

Flanged covers have a 7.5mm flange.
Cover clamps are not included with the cover and must be ordered separately.

Fitting Cover Part Numbering

Prefix | Suffix

Example: **PCF S P15 HB - 500 - 60 R600 - 050** **(side rail height)**

Cover Type

PCF = **(Perforated & Solid Tray Fitting Cover)**

Top Style

S = Solid

L = Louvered

Material & Thickness

P15 = Pre-Galv, 1.5mm
G12 = HDGAF, 1.2mm
G15 = HDGAF, 1.5mm
SS615 = Stainless, 1.5mm Type 316
A10 = Aluminum, 1.0mm

HB **Insert HB Suffix from pages PS-12 – PS-15**
HT **Insert HT Suffix from pages PS-16**
HX **Insert HX Suffix from pages PS-17**
LR **Insert LR Suffix from pages PS-18**
SR **Insert SR Suffix from pages PS-18**
RR **Insert SR Suffix from pages PS-18**
VI **Insert VI Suffix from pages PS-19 – PS-22**
VO **Insert VO Suffix from pages PS-19 – PS-22 & Side Rail Height**

All dimensions are in millimeters unless otherwise specified.

Steel Cable Ladder Series 1

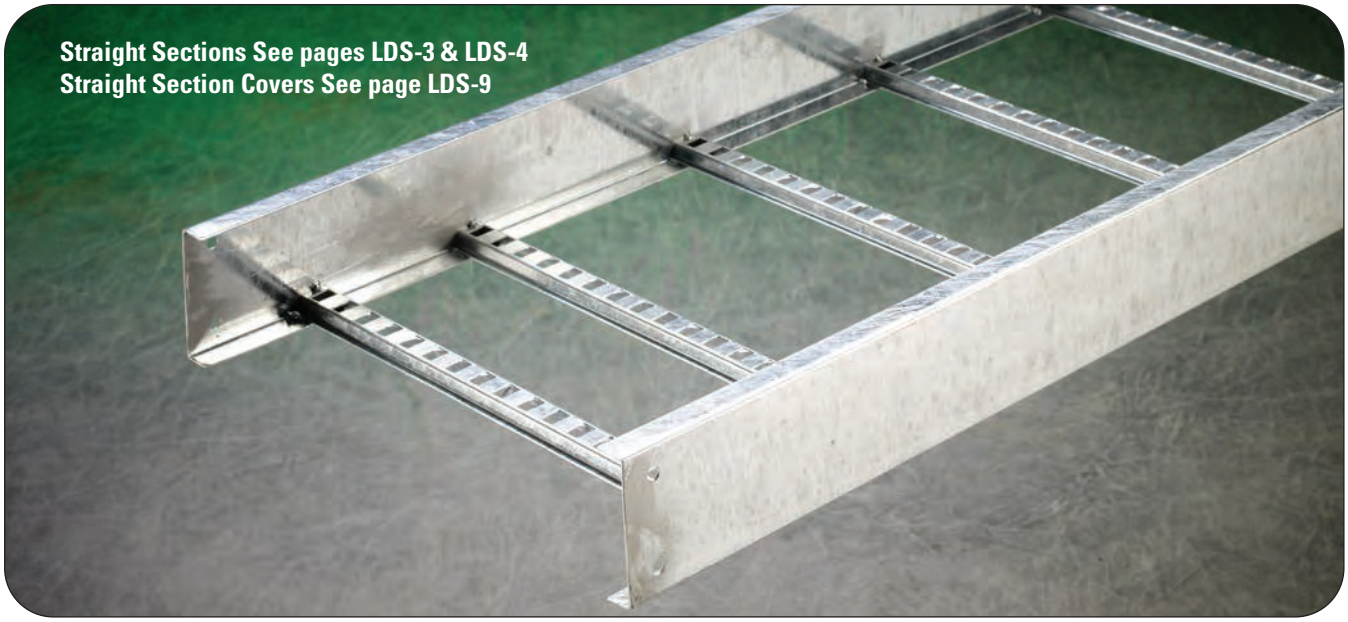

Steel Cable Ladder, Series 1

Side Rails

B-Line C-Shape Side Rail - designed for lighter duty applications

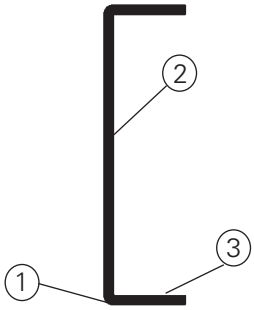

1. **Roll formed for extra strength**
2. **C-Shape side rail designed for lighter duty applications**
3. **Positive Rung Support**

Splices -- providing system integrity

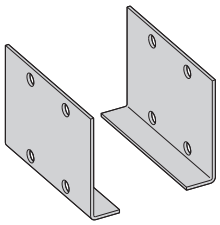

Standard Splices -- the engineered connection:
- High strength steel
- Four bolt connection to maintain strength and save labor

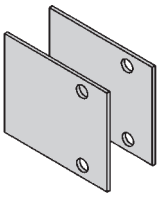

Universal Splice Plate
- Easy installation to existing cable ladder systems
- Provided in pairs with universal hardware

Reliable time-tested products
- 200 lb. Concentrated Load- side rail and rungs
- Splice integrity - 3" fitting tangents
- Slotted rung options allows for easy cable tie installation

Series 148 - 3" (76mm) Loading Depth
Actual Side Rail Height - 3.625" (92mm)

Series 156 - 4" (101mm) Loading Depth
Actual Side Rail Height - 4.188" (106mm)

Series 166 - 5" (127mm) Loading Depth
Actual Side Rail Height - 5.188" (132mm)

Series 166 - 6" (152mm) Loading Depth
Actual Side Rail Height - 6.188" (158mm)

Straight Section Part Numbering

Prefix Suffix

Example: **156 P 09 SL - 24 - 144**

Series	Material	Rung Spacing	Rung Type	Width	Length
148	**P** = Pre-Galvanized Steel	**Ladder**	**(Blank)** - Non-Slotted	**06** = 6" (152)	**144** = 12 ft. (3.7m)
156	**G** = Hot Dip Galvanized After Fabrication Steel	**06** = 6" (152)		**09** = 9" (228)	120 = 10 ft. (3.0m)
166		**09** = 9" (228)	**SL** - Slotted	**12** = 12" (305)	
176		**12** = 12" (305)		**18** = 18" (457)	
				24 = 24" (609)	
				30 = 30" (762)	
				36 = 36" (914)	

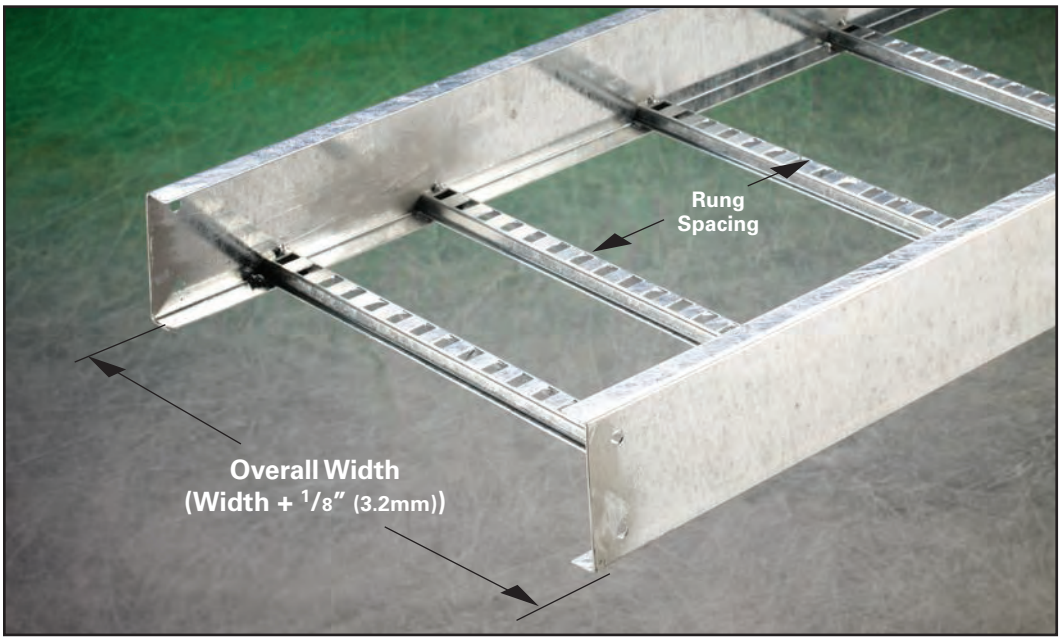

Shown with slotted rung (SL) type option.

Dimensional & Loading Information

Values are based on simple beam tests per NEMA VE 1 on 36" (914mm) wide cable ladder with rungs spaced on 12" (305mm) centers. The published load safety factor is 1.5. To convert 1.5 safety factor to 2.0, multiply the published load by 0.75. To obtain mid-span deflection, multiply a load by the deflection multiplier. Cable ladder must be supported on spans shorter than or equal to the length of the cable ladder being installed. When ladders are used in continuous spans, the deflection of the ladder is reduced by as much as 50%.

Series 148 - 3" (76mm) Loading Depth

B-Line Series	Side Rail Dimensions	NEMA, CSA & UL Classifications	Span ft	Span meters	Load lbs/ft	Load kg/m	Deflection Multiplier		Design Factors for Two Rails	
148	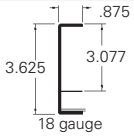	NEMA: 12A, 8C	6	1.8	204*	304*	0.0011	0.019	Area=0.51 in²	Area=3.29 cm²
		CSA: C1-3m	8	2.4	115	171	0.0036	0.061	Sx=0.48 in³	Sx=7.87 cm³
		UL Cross-Sectional	10	3.0	73	109	0.0087	0.149	Ix=0.89 in⁴	Ix=37.04 cm⁴
		Area: 0.40 in²	12	3.7	51	76	0.0181	0.309		

*When using 12" (305mm) rung spacing load capacity is limited to 195 lbs/ft (290.16 kg/m) for 36" (914mm) ladder width.

Series 156 - 4" (101mm) Loading Depth

B-Line Series	Side Rail Dimensions	NEMA, CSA & UL Classifications	Span ft	Span meters	Load lbs/ft	Load kg/m	Deflection Multiplier		Design Factors for Two Rails	
156	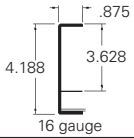	NEMA: 12B, 8C	6	1.8	304*	452*	0.0007	0.011	Area=0.68 in²	Area=4.39 cm²
		CSA: C1-3m	8	2.4	171	254	0.0021	0.036	Sx=0.724 in³	Sx=11.86 cm³
		UL Cross-Sectional	10	3.0	109	163	0.0051	0.087	Ix=1.517 in⁴	Ix=63.14 cm⁴
		Area: 0.40 in²	12	3.7	76	113	0.0110	0.181		

Cable ladder will support without collapse a 200 lb. (90.7 kg) concentrated load over and above the published loads.
*When using 12" (305mm) rung spacing, load capacity is limited to 234 lbs/ft (348.192 kg/m) for 30" (762mm) ladder width and 195 lbs/ft (290.16 kg/m) for 36" (914mm) ladder width.

Series 166 - 5" (127mm) Loading Depth

B-Line Series	Side Rail Dimensions	NEMA, CSA & UL Classifications	Span ft	Span meters	Load lbs/ft	Load kg/m	Deflection Multiplier		Design Factors for Two Rails	
166	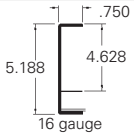	NEMA: 12B, 8C	6	1.8	308*	458*	0.0004	0.007	Area=0.77 in²	Area=4.97 cm²
		CSA: C1-3m	8	2.4	173	258	0.0013	0.033	Sx=0.93 in³	Sx=15.24 cm³
		UL Cross-Sectional	10	3.0	111	165	0.0032	0.055	Ix=2.40 in⁴	Ix=99.90 cm⁴
		Area: 0.70 in²	12	3.7	77	115	0.0067	0.114		

Cable ladder will support without collapse a 200 lb. (90.7 kg) concentrated load over and above the published loads.
*When using 12" (305mm) rung spacing, load capacity is limited to 234 lbs/ft (348.192 kg/m) for 30" (762mm) ladder width and 195 lbs/ft (290.16 kg/m) for 36" (914mm) ladder width.

Series 176 - 6" (152mm) Loading Depth

B-Line Series	Side Rail Dimensions	NEMA, CSA & UL Classifications	Span ft	Span meters	Load lbs/ft	Load kg/m	Deflection Multiplier		Design Factors for Two Rails	
176	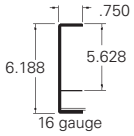	NEMA: 12B, 8C	8	2.4	194	288	0.0008	0.014	Area=0.89 in²	Area=5.74 cm²
		CSA: C1-3m	10	3.0	124	184	0.0020	0.035	Sx=1.23 in³	Sx=20.16 cm³
		UL Cross-Sectional	12	3.7	86	128	0.0042	0.072	Ix=3.80 in⁴	Ix=158.20 cm⁴
		Area: 0.70 in²								

Cable ladder will support without collapse a 200 lb. (90.7 kg) concentrated load over and above the published loads.

Design factors: Ix = Moment of Inertia, Sx = Section Modulus.

Series 1 Steel

Dimensions in parentheses are in millimeters unless otherwise specified.

Steel Cable Ladder Series 1

Standard (L-Shaped) Splice Plates

- One pair including hardware provided with each ladder section.
- Furnished in pairs with hardware.
- Prepackaged in pairs in a plastic bag, with hardware.
- 4-hole pattern L-shaped splice plates.
- L-shaped lay-in design.
- (*) Insert ZN or G

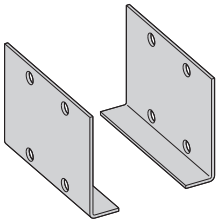

Ladder Series	Catalog No.
148	**9(*)-4004**
156	**9(*)-4005**
166	**9(*)-4006**
176	**9(*)-4007**

Expansion (L-Shaped) Splice Plates

- Expansion plates allow for one inch expansion or contraction of the cable ladder, or where expansion joints occur in the supporting structure.
- **Bonding Jumpers are required. Part # 99-N1. Order Separately.**
- L-shaped lay-in design.
- Furnished in pairs with hardware.
- (*) Insert ZN or G

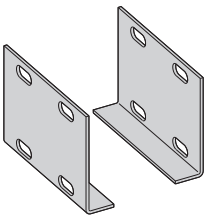

Ladder Series	Catalog No.
148	**9(*)-4014**
156	**9(*)-4015**
166	**9(*)-4016**
176	**9(*)-4017**

Universal Splice Plates

- Used to splice to existing cable ladder systems.
- Furnished in pairs with hardware.
- (*) Insert P or G

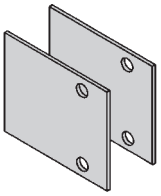

Ladder Series	Catalog No.
148	**9(*)-2004-1/2**
156	**9(*)-2005-1/2**
166	**9(*)-2006-1/2**
176	**9(*)-2007-1/2**

Step Down Splice Plates

- These splice plates are offered for connecting cable ladder sections having side rails of different heights.
- Furnished in pairs with hardware.
- (*) Insert ZN or G

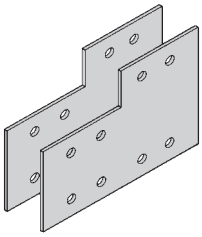

Ladder Series	Catalog No.
148	**9(*)-8004**
156	**9(*)-8045**
166	**9(*)-8046**
176	**9(*)-8060**

Vertical Adjustable Splice Plates

- These plates provide for changes in elevation that do not conform to standard vertical fittings.
- Furnished in pairs with hardware.
- (*) Insert ZN or G

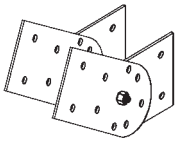

Requires supports within 24" (609mm) on both sides, per NEMA VE 2.

Ladder Series	Catalog No.
148	**9(*)-7024**
156	**9(*)-8024**
166	**9(*)-8025**
176	**9(*)-8026**

Horizontal Adjustable Splice Plates

- Offered to adjust a cable ladder run for changes in direction in a horizontal plane that do not conform to standard horizontal fittings.
- Furnished in pairs with hardware.
- New design bonding jumpers **not** required.
- (*) Insert ZN or G
- (X) Insert 4 for series 148 or 156
  5 for series 166
  6 for series 176

9(*)-803(X)
Splices only

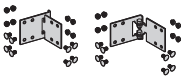

Requires supports within 24" (609mm) on both sides, per NEMA VE 2.

9(*)-803(X)-12 or 9(*)-803(X)-36
One pair splice plates with extensions.

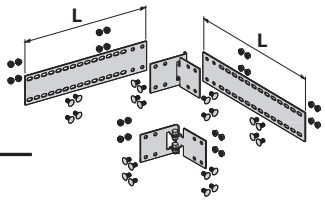

Catalog No.	Ladder End Cut	Ladder Width	'L'
9(*)-803(X)	Mitered	Thru 36" (914)	N/A
9(*)-803(X)-12	Not mitered	Thru 12" (305)	16" (406)
9(*)-803(X)-36	Not mitered	Thru 36" (914)	41" (1041)

Dimensions in parentheses are in millimeters unless otherwise specified.

Offset Reducing Splice Plate

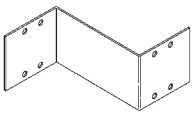

- This plate is used for joining cable ladders having different widths. When used in pairs they form a straight reduction; when used with a standard splice plate they form an offset reduction.
- Furnished as one plate with hardware.
- (*) Insert P or G
- (‡) Insert reduction number, shown bold, in the Reduction Chart below.

Left or right reductions (LR/RR) require one offset reducing splice plate and one standard splice plate

Straight reduction (SR) requires two offset reducing splice plates

Ladder Series	Catalog No.
148	**9(*)-8064-(‡)**
156	**9(*)-8064-(‡)**
166	**9(*)-8065-(‡)**
176	**9(*)-8066-(‡)**

Reduction Chart

Reducing From Width Of		To Width Of											
		30" (762mm)		24" (609mm)		18" (457mm)		12" (305mm)		9" (228mm)		6" (152mm)	
in.	(mm)	LR/RR	SR	LR/RR	SR	LR/RR	SR	LR/RR	SR	LR/RR	SR	LR/RR	SR
36	(914)	**6**	**3**	**12**	**6**	**18**	**9**	**24**	**12**	**27**	**13.5**	**30**	**15**
30	(762)	–	–	**6**	**3**	**12**	**6**	**18**	**9**	**21**	**10.5**	**24**	**12**
24	(609)	–	–	–	–	**6**	**3**	**12**	**6**	**15**	**7.5**	**18**	**9**
18	(457)	–	–	–	–	–	–	**6**	**3**	**9**	**4.5**	**12**	**6**
12	(305)	–	–	–	–	–	–	–	–	**3**	**1.5**	**6**	**3**
9	(228)	–	–	–	–	–	–	–	–	–	–	**3**	**1.5**

Ladder to Box Splice Plates

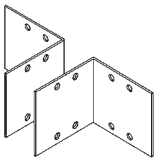

- Used to attach the end of a cable ladder to a distribution box, wall, or control panel.
- Furnished in pairs with hardware.
- (*) Insert P or G

Ladder Series	Catalog No.
148	**9(*)-8054**
156	**9(*)-8054**
166	**9(*)-8055**
176	**9(*)-8056**

Frame Type Box Connector

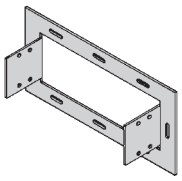

- Designed to attach the end of a cable ladder run to a distribution cabinet or control center to help reinforce the box at the point of entry.
- Furnished with ladder connection hardware.
- (‡) Insert ladder width
- (*) Insert P or G

Ladder Series	Catalog No.
148	**9(*)-8074-(‡)**
156	**9(*)-8074-(‡)**
166	**9(*)-8075-(‡)**
176	**9(*)-8076-(‡)**

Blind End

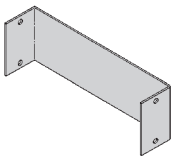

- This plate forms a closure for a dead end cable ladder.
- Furnished as one plate with hardware.
- (‡) Insert ladder width
- (*) Insert P or G

Ladder Series	Catalog No.
148	**9(*)-8084-(‡)**
156	**9(*)-8084-(‡)**
166	**9(*)-8085-(‡)**
176	**9(*)-8086-(‡)**

Ladder Hardware

Pre-Galvanized Ladder Hardware	Hot Dip Galvanized Ladder Hardware
Catalog No. RNCB 3/8"-16 x 3/4" ZNPLT Ribbed Neck Carriage Bolt ASTM A307 Grade A	**Catalog No. RNCB 3/8"-16 x 3/4" CZ** Ribbed Neck Carriage Bolt Chromium Zinc ASTM F-1136-88
Catalog No. SFHN 3/8"-16 ZNPLT Serrated Flange Hex Nut ASTM A563 Grade A	**Catalog No. SFHN 3/8"-16 CZ** Serrated Flange Hex Nut Chromium Zinc ASTM F-1136-88

Finish: Zinc Plated ASTM B633, SC1

Dimensions in parentheses are in millimeters unless otherwise specified.

Steel Cable Ladder Series 1

Conduit to Ladder Adaptor

- For easy attachment of conduit terminating at a cable ladder.
- Use on aluminum or steel cable ladders.

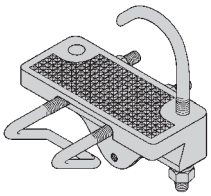

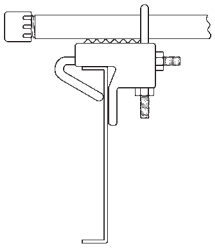

Catalog No.	Conduit Size in.	Conduit Size mm
9G-1158-1/2, 3/4	1/2, 3/4	15, 20
9G-1158-1, 1 1/4	1, 1 1/4	25, 32
9G-1158-1 1/2, 2	1 1/2, 2	40, 50
9G-1158-2 1/2, 3	2 1/2, 3	65, 80
9G-1158-3 1/2, 4	3 1/2, 4	90, 100

Cable Ladder Clamp/Guide

- Features a no-twist design.
- Has four times the strength of the traditional design.
- Each side is labeled to ensure proper installation.
- Furnished in pairs, with or without hardware.

Patent # RE35479

Catalog No. Without Hardware	Catalog No. With Hardware	Overall Length in.	Overall Length mm	Hardware Size	Finish
9ZN-1204	**9ZN-1204NB**	1 1/2	(38)	1/4"	ZNPLT
9ZN-1208	**9ZN-1208NB**	2 1/4	(57)	3/8"	ZNPLT

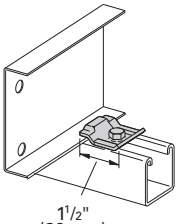

9ZN-1204 shown.
Installed as a guide.

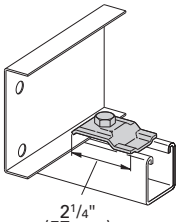

9ZN-1208 shown.
Installed as a clamp.

Ground Wire Clamp

- Mechanically attaches grounding cables to cable ladder.
- Hardware included.
- (*) Insert ZN or SS4

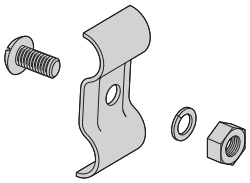

Catalog No.	Cable Size
9(*)-2351	#1 thru 2/0
9(*)-2352	3/0 thru 250 MCM

Grounding Clamp

B-Line Cable Ladder is UL® classified as to its suitability as an equipment grounding conductor. If a separate conductor for additional grounding capability is desired, B-Line offers this clamp for bolting the conductor at least once to each ladder section.

- Accepts #6 AWG to 250 MCM.

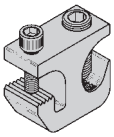

Catalog No.	Material	Item
9A-2130	Tin Plated Aluminum	Grounding Clamp

Bonding Jumper

Use at each expansion splice and where the cable ladder is not mechanically/electrically continuous to ground.
Sold individually.

- Hardware included.
- See table 392.7(B)(2) on page CLS-9 for amperage ratings required to match the UL cross-sectional area of the ladder.
- 600 amp rating.
- Bonding jumper is 16" (406) long.

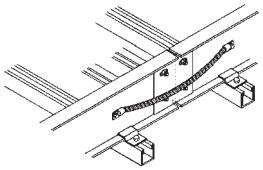

Catalog No.	Cross-Sectional Area	Ampacity
99-N1	0.40 Square inches	600

Threaded Rod (ATR) & Rod Coupling

Loading based on safety factor 5.
Standard Finish: Zinc plated

B655

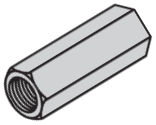

ATR

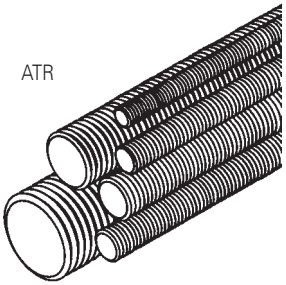

Size	Loading lbs.	Loading (kN)	Catalog No.	Available Lengths	Coupling Cat. No.
3/8-16	730	(3.24)	**ATR 3/8 x Length**	36" (914), 72" (1829), 120" (3048), 144" (3657)	**B655-3/8**
1/2-13	1350	(6.00)	**ATR 1/2 x Length**	36" (914), 72" (1829), 120" (3048), 144" (3657)	**B655-1/2**

Dimensions in parentheses are in millimeters unless otherwise specified.

Hanger Rod Clamp

- For 1/2" ATR.
- Furnished in pairs.
- Order ATR and hex nuts separately.
- Two piece "J"-hanger design.
- 9ZN-1113 has 275 lbs. (1.22kN)/pair safety factor 3 capacity.
- 9ZN-532(X) has 1500 lbs. (6.67kN)/pair capacity safety factor 3.

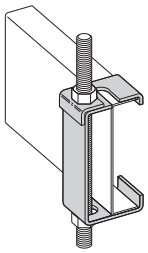

Ladder Series	Catalog No.
148	**9ZN-1113**
156	**9ZN-5324**
166	**9ZN-5325**
176	**9ZN-5326**

Ladder Drop-Out

- Easy to install drop-out provides a 4" (101.6 mm) radius to protect cables exiting the cable ladder from damage.
- Attaches to a ladder rung.
- Hardware included.
- (*) Insert P or G
- (‡) Insert ladder width

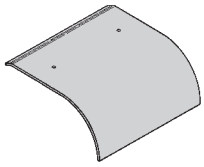

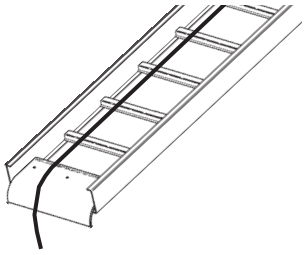

Catalog No.
9(*)-1104T-(‡)

Straight Section Barriers

- Standard length: 120" (3m) 144" (12 ft.).
- Order catalog number based on loading depth.
- Furnished with four #10 x 1/2" plated self-drilling screws and a 99-9982 splice.
- (*) Insert P or G
- † Insert ladder length of 120 or 144

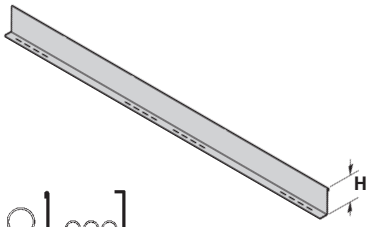

Ladder Series	Catalog No.	H in.	H (mm)
148	**72(*)-Length†**	2.8	(58)
156	**737(*)-Length†**	3.4	(70)
166	**747(*)-Length†**	4.4	(91)
176	**757(*)-Length†**	5.4	(112)

Length = 144 for 12'-0" or 120 for 10'-0"

Horizontal Bend Barriers

- Horizontal Bend Barriers are flexible to conform to any horizontal fitting radius. Cut to length.
- Order catalog number based on loading depth.
- Furnished with three #10 x 1/2" zinc plated self-drilling screws and a 99-9982 Barrier Strip Splice.
- Standard length is 72" (1828mm) (6 ft.), sold individually.
- (*) Insert P or G

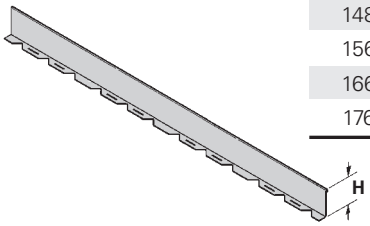

Ladder Series	Catalog No.	H in.	H (mm)
148	**72(*)-90HBFL**	2.8	(58)
156	**737(*)-90HBFL**	3.4	(70)
166	**747(*)-90HBFL**	4.4	(91)
176	**757(*)-90HBFL**	5.4	(112)

Vertical Bend Barriers

- Vertical Bend Barriers are preformed to conform to a specific vertical fitting.
- Furnished with three #10 x 1/2" plated self-drilling screws and a 99-9982 Barrier Strip Splice.
- (*) Insert P or G
- (**) Insert 30, 45, 60 or 90 for degrees
- (†) Insert 12 or 24 for radius

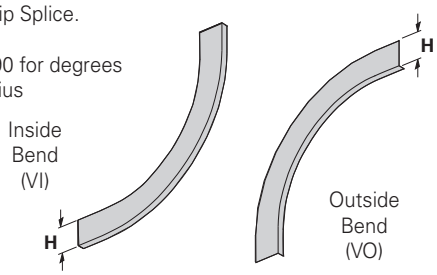

Ladder Series	Catalog No. Inside Bend	Catalog No. Outside Bend	H in.	H (mm)
148	**72(*)-(**)VI(†)**	**72(*)-(**)VO(†)**	2.8	(58)
156	**737(*)-(**)VI(†)**	**737(*)-(**)VO(†)**	3.4	(70)
166	**747(*)-(**)VI(†)**	**747(*)-(**)VO(†)**	4.4	(91)
176	**757(*)-(**)VI(†)**	**757(*)-(**)VO(†)**	5.4	(112)

Barrier Strip Splice

- Plastic splice holds adjoining barrier strips in straight alignment.

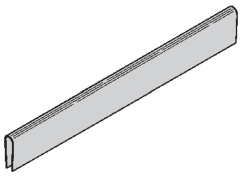

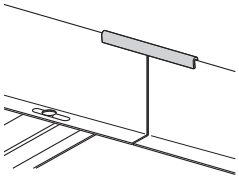

Catalog No.
99-9982

Dimensions in parentheses are in millimeters unless otherwise specified.

Covers

Solid covers should be used when maximum enclosure of the cables is desired and no accumulation of heat is expected.

Ventilated covers allow heat to escape.

B-Line recommends that covers on vertical cable ladder runs to a height of 6 ft. (1.83 m) to 8 ft. (2.44 m) above the floor to isolate both cables and personnel.

Flanged covers have a .30 in. (7.6 mm) flange.

Cover clamps are not included with the cover and must be ordered separately.

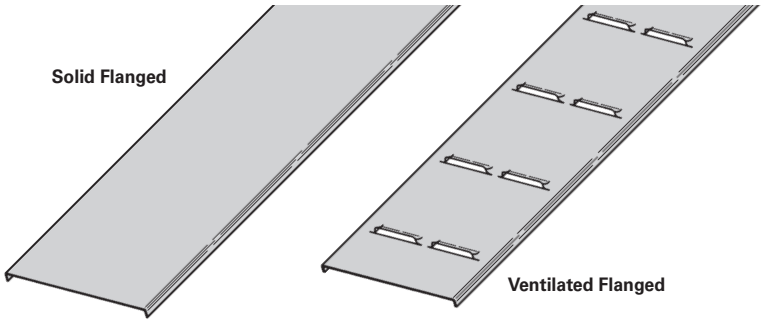

Straight Section Covers Part Numbering

Prefix

Example: **80 1 P - 20 - 24 - 144**

Cover Type	Detail	Material	Material Thickness	Ladder Width	Item Description
80 = Solid 81 = Ventilated	1 = Flanged	P = Pre-Galvanized G = HDGAF	20 = 20 Ga. Steel for Pre-Galvanized 18 = 18 Ga. Steel for HDGAF	06 = 6" (152) 09 = 9" (228) 12 = 12" (305) 18 = 18" (457) 24 = 24" (609) 30 = 30" (762) 36 = 36" (914)	For Straight Section Cover: **Pre-Galvanized Only:** 144 = 12 ft. (3.66 m) 120 = 10 ft. (3.05 m) **Pre-Galvanized & HDGAF** 72 = 6 ft. (1.83 m) 60 = 5 ft. (1.52 m) For fitting covers: Insert suffix of fitting to be covered. See example below.

Covers 30" and 36" wide have reinforcing ridges.

Quantity of Standard Cover Clamps Required

Straight Section 60" (1.52m) or 72" (1.83m)	4 pcs.
Straight Section 120" (3.05m) or 144" (3.66m)	6 pcs.
Horizontal/Vertical Bends	4 pcs.
Tees	6 pcs.
Crosses	8 pcs.

Note: When using the Heavy Duty Cover Clamp, only one-half the number of clamps stated above is required.

Fitting Covers

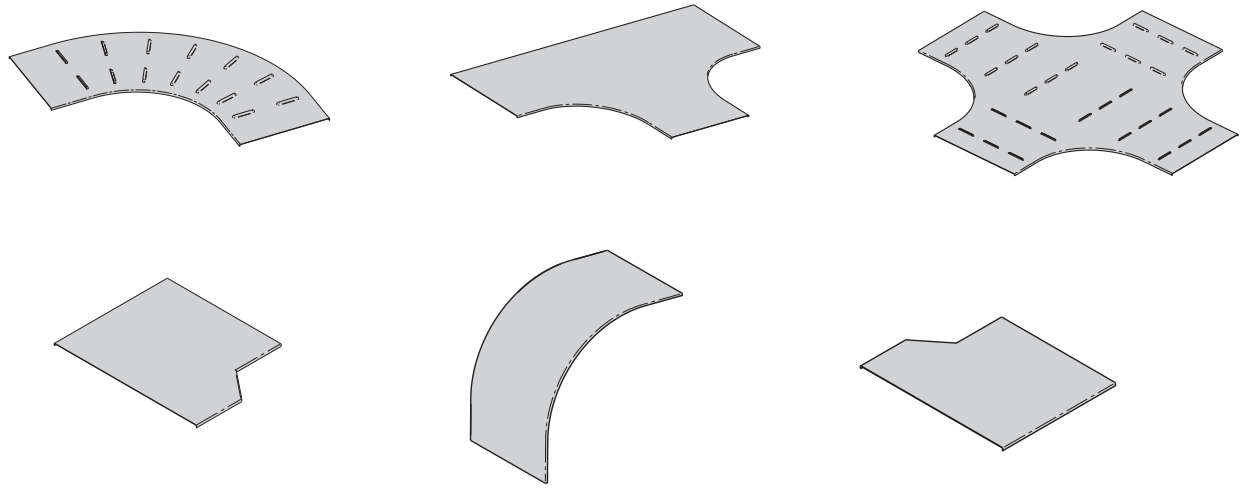

Fitting Covers Part Numbering

Prefix — Suffix

Example: **80 1 P - 20 - 06 - 90 HB 12 - 4** **(side rail height)**

Cover Type
80 = Solid
81 = Ventilated

Detail
1 = Flanged

Material
P = Pre-Galvanized
G = HDGAF

Material Thickness
20 = 20 Ga. Steel for Pre-Galvanized
18 = 18 Ga. Steel for HDGAF

HB **Insert HB Suffix from page LDS-13**
HT **Insert HT Suffix from page LDS-14**
HX **Insert HX Suffix from page LDS-14**
RR **Insert RR Suffix from page LDS-15**
LR **Insert LR Suffix from page LDS-15**
SR **Insert SR Suffix from page LDS-15**
VI **Insert VI Suffix from pages LDS-16 – LDS-19**
VO **Insert VO Suffix from pages LDS-16 – LDS-19 & Side Rail Height**

Dimensions in parentheses are in millimeters unless otherwise specified.

Standard Cover Clamp

- Sold per piece
- For indoor service only

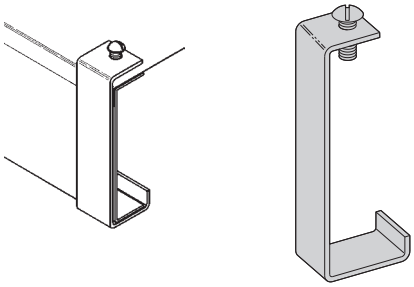

Ladder Series	Catalog No. Znplt	HDGAF
148	9ZN-9019	9G-9019
156	9ZN-9014	9G-9014
166	9ZN-9015	9G-9015
176	9ZN-9016	9G-9016

Combination Hold Down & Cover Clamp

- Sold per piece
- For indoor service only

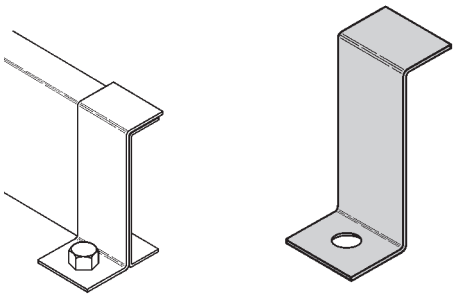

Ladder Series	Catalog No. Znplt/Pre-Galv	HDGAF
148	9ZN-9243	9G-9243
156	9P-9043	9G-9043
166	9P-9053	9G-9053
176	9P-9063	9G-9063

Heavy Duty Cover Clamp

- (‡) Insert ladder width

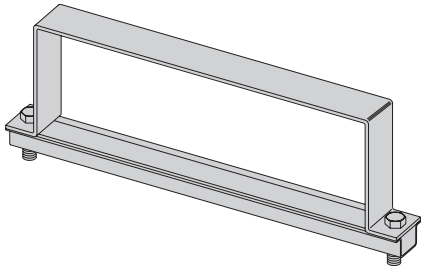

Ladder Series	Catalog No. Pre-Galv	HDGAF
148	9P-(‡)-9040	9G-(‡)-9040
156	9P-(‡)-9044	9G-(‡)-9044
166	9P-(‡)-9054	9G-(‡)-9054
176	9P-(‡)-9064	9G-(‡)-9064

Cover Joint Strip

- Used to join covers
- Plastic
- (‡) Insert ladder width

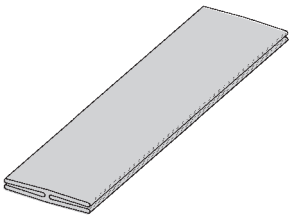

Catalog No.
99-9980-(‡)

Dimensions in parentheses are in millimeters unless otherwise specified.

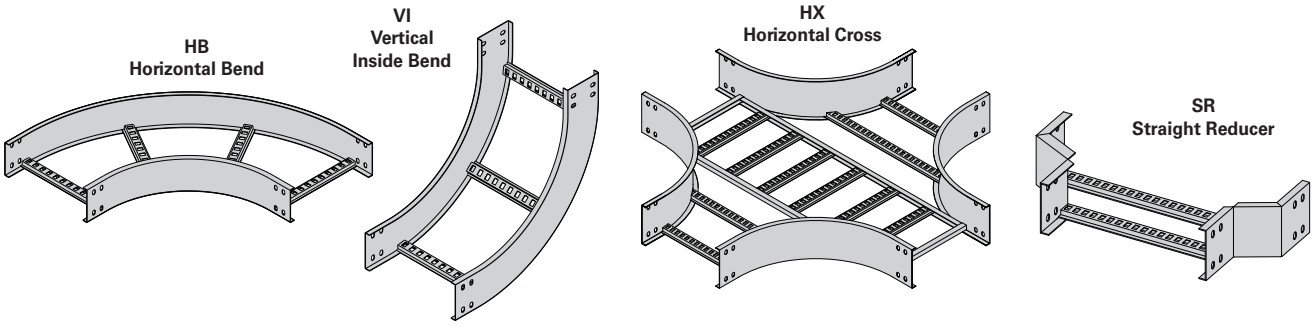

Fittings engineered with 3" (76mm) tangents for splicing integrity.

Fittings Part Numbering

Prefix / Suffix

Example: **1 4 P SL - 24 - 90 HB 24** (9" rung spacing is standard)

Series	Height	Material	Rung Type	Width	Angle†	Type	Radius
1	**4** = 148 **5** = 156 **6** = 166 **7** = 176	**P** = Pre-Galvanized **G** = HDGAF	**Blank** = Non-Slotted Rung **SL** = Slotted Rung	**06** = 6" (152) **09** = 9" (228) **12** = 12" (305) **18** = 18" (457) **24** = 24" (609) **30** = 30" (762) **36** = 36" (914)	**30** = 30° **45** = 45° **60** = 60° **90** = 90°	**HB** = Horizontal Bend **HT** = Horizontal Tee† **HX** = Horizontal Cross† **VI** = Vertical Inside Bend **VO** = Vertical Outside Bend	**12** = 12" (305) **24** = 24" (609) **36** = 36" (914)

† No angle designation required on these fitting covers.

Reducer Fittings Part Numbering

Prefix / Suffix

Example: **1 4 P SL - 30 - LR 12** (9" rung spacing is standard)

Series	Height	Material	Rung Type	Width 1	Type	Width 2
1	**4** = 148 **5** = 156 **6** = 166 **7** = 176	**P** = Pre-Galvanized **G** = HDGAF	**Blank** = Non-Slotted Rung **SL** = Slotted Rung	**09** = 9" (228) **12** = 12" (305) **18** = 18" (457) **24** = 24" (609) **30** = 30" (762) **36** = 36" (914)	**LR** = Left Reducer **RR** = Right Reducer **SR** = Straight Reducer	**06** = 6" (152) **09** = 9" (228) **12** = 12" (305) **18** = 18" (457) **24** = 24" (609) **30** = 30" (762)

Dimensions in parentheses are in millimeters unless otherwise specified.

Horizontal Bends 90° 60° 45° 30° (HB)

1 pair splice plates with hardware included.

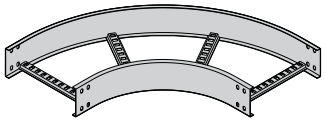

90˚ Horizontal Bend

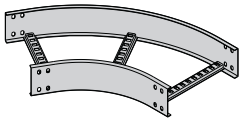

60˚ Horizontal Bend

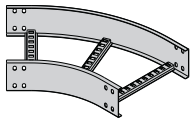

45˚ Horizontal Bend

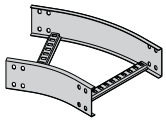

30˚ Horizontal Bend

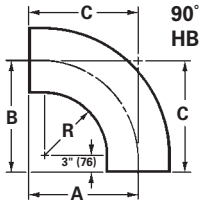

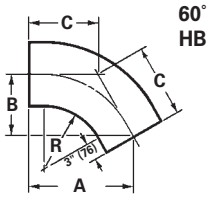

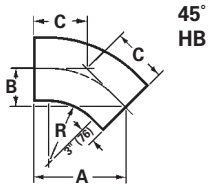

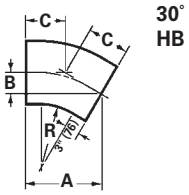

Bend Radius R in.	(mm)	Ladder Width in.	(mm)	90˚ Horizontal Bend Dimensions Catalog No.	A in.	(mm)	B in.	(mm)	C in.	(mm)	60˚ Horizontal Bend Dimensions Catalog No.	A in.	(mm)	B in.	(mm)	C in.	(mm)
		6	(152)	**(Pre)-06-90HB12**	18	(450)	18	(450)	18	(450)	**(Pre)-06-60HB12**	17 1/2	(445)	10 1/8	(257	11 11/16	(297)
		9	(228)	**(Pre)-09-90HB12**	19 1/2	(495)	19 1/2	(495)	19 1/2	(495)	**(Pre)-09-60HB12**	18 13/16	(478)	10 7/8	(276	12 1/2	(318)
		12	(305)	**(Pre)-12-90HB12**	21	(533)	21	(533)	21	(533)	**(Pre)-12-60HB12**	20 1/16	(510)	11 5/8	(295	13 3/8	(340)
12	(305)	18	(457)	**(Pre)-18-90HB12**	24	(600)	24	(600)	24	(600)	**(Pre)-18-60HB12**	22 11/16	(576)	13 1/8	(333	15 1/8	(384)
		24	(609)	**(Pre)-24-90HB12**	27	(686)	27	(686)	27	(686)	**(Pre)-24-60HB12**	25 5/16	(643)	14 5/8	(372	16 7/8	(429)
		30	(762)	**(Pre)-30-90HB12**	30	(750)	30	(750)	30	(750)	**(Pre)-30-60HB12**	27 7/8	(708)	16 1/8	(410	18 9/16	(472)
		36	(914)	**(Pre)-36-90HB12**	33	(838)	33	(838)	33	(838)	**(Pre)-36-60HB12**	30 1/2	(775)	17 5/8	(448	20 5/16	(516)
		6	(152)	**(Pre)-06-90HB24**	30	(750)	30	(750)	30	(750)	**(Pre)-06-60HB24**	27 7/8	(708)	16 1/8	(410	18 9/16	(472)
		9	(228)	**(Pre)-09-90HB24**	31 1/2	(800)	31 1/2	(800)	31 1/2	(800)	**(Pre)-09-60HB24**	29 3/16	(741)	16 7/8	(429	19 7/16	(494)
		12	(305)	**(Pre)-12-90HB24**	33	(838)	33	(838)	33	(838)	**(Pre)-12-60HB24**	30 1/2	(775)	17 5/8	(448	20 5/16	(516)
24	(609	18	(457)	**(Pre)-18-90HB24**	36	(914)	36	(914)	36	(914)	**(Pre)-18-60HB24**	33 1/16	(840)	19 1/8	(486	22 1/16	(560)
		24	(609)	**(Pre)-24-90HB24**	39	(991)	39	(991)	39	(991)	**(Pre)-24-60HB24**	35 11/16	(907)	20 5/8	(524	23 13/16	(605)
		30	(762)	**(Pre)-30-90HB24**	42	(1067)	42	(1067)	42	(1067)	**(Pre)-30-60HB24**	38 1/4	(972)	22 1/8	(562	25 1/2	(648)
		36	(914)	**(Pre)-36-90HB24**	45	(1143)	45	(1143)	45	(1143)	**(Pre)-36-60HB24**	40 7/8	(1038)	23 5/8	(600	27 1/4	(692)
				45˚ Horizontal Bend							**30˚ Horizontal Bend**						
		6	(152)	**(Pre)-06-45HB12**	15 3/4	(400)	6 1/2	(165)	9 3/16	(233)	**(Pre)-06-30HB12**	13 1/8	(333)	3 1/2	(89)	7	(175)
		9	(228)	**(Pre)-09-45HB12**	16 13/16	(427)	6 15/16	(176)	9 13/16	(249)	**(Pre)-09-30HB12**	13 7/8	(352)	3 11/16	(94)	7 7/16	(189)
		12	(305)	**(Pre)-12-45HB12**	17 7/8	(454)	7 3/8	(187)	10 7/16	(265)	**(Pre)-12-30HB12**	14 5/8	(372)	3 15/16	(100)	7 13/16	(198)
12	(305	18	(457)	**(Pre)-18-45HB12**	20	(500)	8 1/4	(210)	11 11/16	(297)	**(Pre)-18-30HB12**	16 1/8	(410)	4 5/16	(135)	8 5/8	(219)
		24	(609)	**(Pre)-24-45HB12**	22 1/16	(560)	9 1/8	(232)	12 15/16	(329)	**(Pre)-24-30HB12**	17 5/8	(448)	4 11/16	(119)	9 7/16	(240)
		30	(762)	**(Pre)-30-45HB12**	24 3/16	(614)	10	(250)	14 3/16	(360)	**(Pre)-30-30HB12**	19 1/8	(486)	5 1/8	(130)	10 1/4	(260)
		36	(914)	**(Pre)-36-45HB12**	26 5/16	(668)	10 15/16	(278)	15 7/16	(392)	**(Pre)-36-30HB12**	20 5/8	(524)	5 1/2	(140)	11 1/16	(281)
		6	(152)	**(Pre)-06-45HB24**	24 3/16	(614)	10	(250)	14 3/16	(360)	**(Pre)-06-30HB24**	19 1/8	(486)	5 1/8	(130)	10 1/4	(260)
		9	(228)	**(Pre)-09-45HB24**	25 1/4	(641)	10 1/2	(267)	14 13/16	(376)	**(Pre)-09-30HB24**	19 7/8	(505)	5 5/16	(135)	10 5/8	(270)
		12	(305)	**(Pre)-12-45HB24**	26 5/16	(668)	10 15/16	(278)	15 7/16	(392)	**(Pre)-12-30HB24**	20 5/8	(524)	5 1/2	(140)	11 1/16	(281)
24	(609	18	(457)	**(Pre)-18-45HB24**	28 7/16	(722)	11 13/16	(300)	16 11/16	(424)	**(Pre)-18-30HB24**	22 1/8	(562)	5 15/16	(151)	11 13/16	(300)
		24	(609)	**(Pre)-24-45HB24**	30 9/16	(776)	12 11/16	(322)	17 15/16	(456)	**(Pre)-24-30HB24**	23 5/8	(600)	6 5/16	(160)	12 5/8	(321)
		30	(762)	**(Pre)-30-45HB24**	32 11/16	(830)	13 9/16	(345)	19 1/8	(486)	**(Pre)-30-30HB24**	25 1/8	(638)	6 3/4	(172)	13 7/16	(341)
		36	(914)	**(Pre)-36-45HB24**	34 13/16	(884)	14 7/16	(367)	20 3/8	(518)	**(Pre)-36-30HB24**	26 5/8	(676)	7 1/8	(181)	14 1/4	(362)

(Pre) See page LDS-12 for catalog number prefix.
Width dimensions are to inside wall. Manufacturing tolerances apply to all dimensions.

Horizontal Tee (HT)

2 pair splice plates with hardware included.

Bend Radius R in.	Bend Radius R (mm)	Ladder Width in.	Ladder Width (mm)	Horizontal Tee Catalog No.	Dimensions A in.	Dimensions A (mm)	Dimensions B in.	Dimensions B (mm)
		6	(152)	**(Prefix)-06-HT12**	18	(457)	36	(914)
		9	(228)	**(Prefix)-09-HT12**	19½	(495)	39	(991)
		12	(305)	**(Prefix)-12-HT12**	21	(533)	42	(1067)
12	(305)	18	(457)	**(Prefix)-18-HT12**	24	(610)	48	(1219)
		24	(609)	**(Prefix)-24-HT12**	27	(686)	54	(1372)
		30	(762)	**(Prefix)-30-HT12**	30	(762)	60	(1524)
		36	(914)	**(Prefix)-36-HT12**	33	(838)	66	(1676)
		6	(152)	**(Prefix)-06-HT24**	30	(762)	60	(1524)
		9	(228)	**(Prefix)-09-HT24**	31½	(800)	63	(1600)
		12	(305)	**(Prefix)-12-HT24**	33	(838)	66	(1676)
24	(609	18	(457)	**(Prefix)-18-HT24**	36	(914)	72	(1829)
		24	(609)	**(Prefix)-24-HT24**	39	(991)	78	(1981)
		30	(762)	**(Prefix)-30-HT24**	42	(1067)	84	(2134)
		36	(914)	**(Prefix)-36-HT24**	45	(1143)	90	(2286)

(Prefix) See page LDS-12 for catalog number prefix.

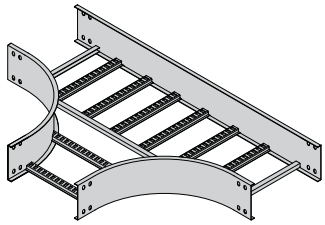

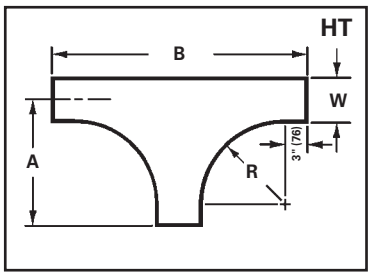

Horizontal Cross (HX)

3 pair splice plates with hardware included.

Bend Radius R in.	Bend Radius R (mm)	Ladder Width in.	Ladder Width (mm)	Horizontal Cross Catalog No.	Dimensions A in.	Dimensions A (mm)	Dimensions B in.	Dimensions B (mm)
		6	(152)	**(Prefix)-06-HX12**	18	(457)	36	(914)
		9	(228)	**(Prefix)-09-HX12**	19½	(495)	39	(991)
		12	(305)	**(Prefix)-12-HX12**	21	(533)	42	(1067)
12	(305)	18	(457)	**(Prefix)-18-HX12**	24	(610)	48	(1219)
		24	(609)	**(Prefix)-24-HX12**	27	(686)	54	(1372)
		30	(762)	**(Prefix)-30-HX12**	30	(762)	60	(1524)
		36	(914)	**(Prefix)-36-HX12**	33	(838)	66	(1676)
		6	(152)	**(Prefix)-06-HX24**	30	(762)	60	(1524)
		9	(228)	**(Prefix)-09-HX24**	31½	(800)	63	(1600)
		12	(305)	**(Prefix)-12-HX24**	33	(838)	66	(1676)
24	(609	18	(457)	**(Prefix)-18-HX24**	36	(914)	72	(1829)
		24	(609)	**(Prefix)-24-HX24**	39	(991)	78	(1981)
		30	(762)	**(Prefix)-30-HX24**	42	(1067)	84	(2134)
		36	(914)	**(Prefix)-36-HX24**	45	(1143)	90	(2286)

(Prefix) See page LDS-12 for catalog number prefix.

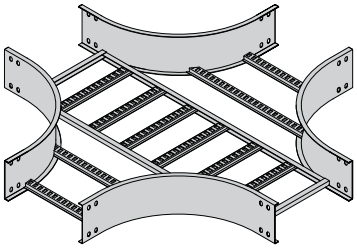

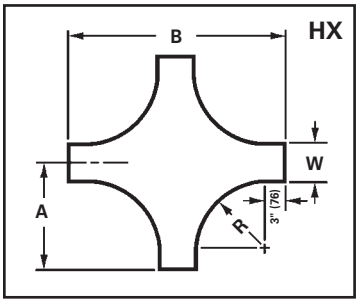

Width dimensions are to inside wall. Manufacturing tolerances apply to all dimensions.

Dimensions in parentheses are in millimeters unless otherwise specified.

Reducers (LR, SR, RR)

1 pair splice plates with hardware included.

Reducer Part Numbering

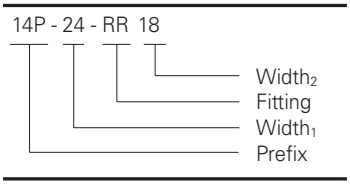

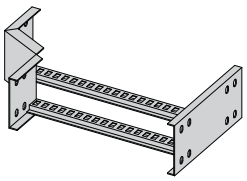

Left Reducer

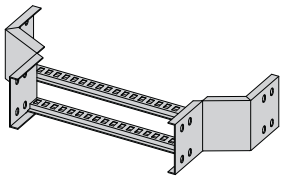

Straight Reducer

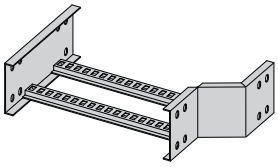

Right Reducer

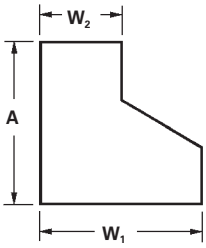

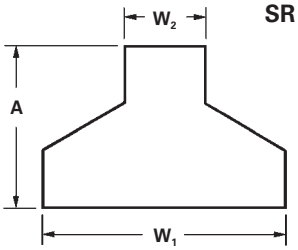

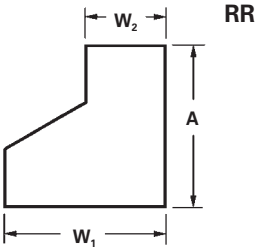

Ladder Width				Left Hand Reducer			Straight Reducer			Right Hand Reducer		
W_1		W_2		Catalog No.	A		Catalog No.	A		Catalog No.	A	
in.	(mm)	in.	(mm)		in.	(mm)		in.	(mm)		in.	(mm)
9	(228)	6	(152)	**(Prefix)-09-LR06**	9 3/4	(248)	**(Prefix)-09-SR06**	8 7/8	(225)	**(Prefix)-09-RR06**	9 3/4	(248)
12	(305)	6	(152)	**(Prefix)-12-LR06**	11 1/2	(292)	**(Prefix)-12-SR06**	9 3/4	(248)	**(Prefix)-12-RR06**	11 1/2	(292)
		9	(228)	**(Prefix)-12-LR09**	9 3/4	(248)	**(Prefix)-12-SR09**	8 7/8	(225)	**(Prefix)-12-RR09**	9 3/4	(248)
18	(457)	6	(152)	**(Prefix)-18-LR06**	14 15/16	(379)	**(Prefix)-18-SR06**	11 1/2	(292)	**(Prefix)-18-RR06**	14 15/16	(379)
		9	(228)	**(Prefix)-18-LR09**	13 3/16	(340)	**(Prefix)-18-SR09**	10 5/8	(270)	**(Prefix)-18-RR09**	13 3/16	(340)
		12	(305)	**(Prefix)-18-LR12**	11 1/2	(292)	**(Prefix)-18-SR12**	9 3/4	(248)	**(Prefix)-18-RR12**	11 1/2	(292)
24	(609)	6	(152)	**(Prefix)-24-LR06**	18 3/8	(467)	**(Prefix)-24-SR06**	13 3/16	(340)	**(Prefix)-24-RR06**	18 3/8	(467)
		9	(228)	**(Prefix)-24-LR09**	16 11/16	(424)	**(Prefix)-24-SR09**	12 3/8	(314)	**(Prefix)-24-RR09**	16 11/16	(424)
		12	(305)	**(Prefix)-24-LR12**	14 15/16	(379)	**(Prefix)-24-SR12**	11 1/2	(292)	**(Prefix)-24-RR12**	14 15/16	(379)
		18	(457)	**(Prefix)-24-LR18**	11 1/2	(292)	**(Prefix)-24-SR18**	9 3/4	(248)	**(Prefix)-24-RR18**	11 1/2	(292)
30	(762)	6	(152)	**(Prefix)-30-LR06**	21 7/8	(555)	**(Prefix)-30-SR06**	14 15/16	(380)	**(Prefix)-30-RR06**	21 7/8	(555)
		9	(228)	**(Prefix)-30-LR09**	20 1/8	(511)	**(Prefix)-30-SR09**	14 1/16	(358)	**(Prefix)-30-RR09**	20 1/8	(511)
		12	(305)	**(Prefix)-30-LR12**	18 3/8	(462)	**(Prefix)-30-SR12**	13 3/16	(335)	**(Prefix)-30-RR12**	18 3/8	(462)
		18	(459)	**(Prefix)-30-LR18**	14 15/16	(380)	**(Prefix)-30-SR18**	11 1/2	(292)	**(Prefix)-30-RR18**	14 15/16	(380)
		24	(609)	**(Prefix)-30-LR24**	11 1/2	(292)	**(Prefix)-30-SR24**	9 3/4	(248)	**(Prefix)-30-RR24**	11 1/2	(292)
36	(914)	6	(152)	**(Prefix)-36-LR06**	25 5/16	(643)	**(Prefix)-36-SR06**	16 11/16	(424)	**(Prefix)-36-RR06**	25 5/16	(643)
		9	(228)	**(Prefix)-36-LR09**	23 9/16	(598)	**(Prefix)-36-SR09**	15 13/16	(402)	**(Prefix)-36-RR09**	23 9/16	(598)
		12	(305)	**(Prefix)-36-LR12**	21 7/8	(555)	**(Prefix)-36-SR12**	14 15/16	(380)	**(Prefix)-36-RR12**	21 7/8	(555)
		18	(457)	**(Prefix)-36-LR18**	18 3/8	(462)	**(Prefix)-36-SR18**	13 3/16	(335)	**(Prefix)-36-RR18**	18 3/8	(462)
		24	(609)	**(Prefix)-36-LR24**	14 15/16	(380)	**(Prefix)-36-SR24**	11 1/2	(292)	**(Prefix)-36-RR24**	14 15/16	(380)
		30	(762)	**(Prefix)-36-LR30**	11 1/2	(292)	**(Prefix)-36-SR30**	9 3/4	(248)	**(Prefix)-36-RR30**	11 1/2	(292)

(Prefix) See page LDS-12 for catalog number prefix.

Width dimensions are to inside wall. Manufacturing tolerances apply to all dimensions.

Vertical Bend 90° (VO, VI)

1 pair splice plates with hardware included.

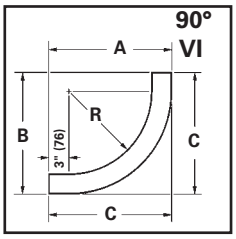

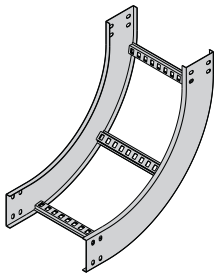

90° Vertical Inside

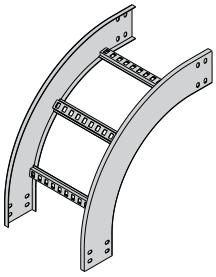

90° Vertical Outside

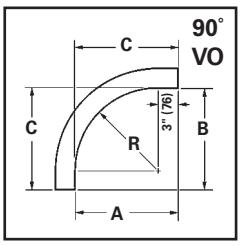

90° Vertical Outside Bend (VO)

Bend Radius R in.	(mm)	Ladder Width in.	(mm)	Catalog No.	VO Dimensions in. / (mm) All Series Heights A	B	C
12	(300	6	(152)	**(Pre)-06-90VO12**	15 (381)	15 (381)	15 (381)
		9	(228)	**(Pre)-09-90VO12**			
		12	(305)	**(Pre)-12-90VO12**			
		18	(457)	**(Pre)-18-90VO12**			
		24	(609)	**(Pre)-24-90VO12**			
		30	(762)	**(Pre)-30-90VO12**			
		36	(914)	**(Pre)-36-90VO12**			
24	(600	6	(152)	**(Pre)-06-90VO24**	27 (686)	27 (686)	27 (686)
		9	(228)	**(Pre)-09-90VO24**			
		12	(305)	**(Pre)-12-90VO24**			
		18	(457)	**(Pre)-18-90VO24**			
		24	(609)	**(Pre)-24-90VO24**			
		30	(762)	**(Pre)-30-90VO24**			
		36	(914)	**(Pre)-36-90VO24**			

(Pre) See page LDS-12 for catalog number prefix.

90° Vertical Inside Bend (VI)

Bend Radius R in.	(mm)	Ladder Width in.	(mm)	Catalog No.	VI Dimensions in. / (mm) Series 14 Steel A	B	C	Series 15 Steel A	B	C	Series 16 Steel A	B	C	Series 17 Steel A	B	C
12	(305)	6	(152)	**(Pre)-06-90VI12**	$18^{7}/_{16}$ (468)	$18^{7}/_{16}$ (468)	$18^{7}/_{16}$ (468)	$19^{3}/_{16}$ (487)	$19^{3}/_{16}$ (487)	$19^{3}/_{16}$ (487)	$20^{3}/_{16}$ (513)	$20^{3}/_{16}$ (513)	$20^{3}/_{16}$ (513)	$21^{3}/_{16}$ (538)	$21^{3}/_{16}$ (538)	$21^{3}/_{16}$ (538)
		9	(228)	**(Pre)-09-90VI12**												
		12	(305)	**(Pre)-12-90VI12**												
		18	(457)	**(Pre)-18-90VI12**												
		24	(609)	**(Pre)-24-90VI12**												
		30	(762)	**(Pre)-30-90VI12**												
		36	(914)	**(Pre)-36-90VI12**												
24	(609)	6	(152)	**(Pre)-06-90VI24**	$30^{7}/_{16}$ (773)	$30^{7}/_{16}$ (773)	$30^{7}/_{16}$ (773)	$31^{3}/_{16}$ (792)	$31^{3}/_{16}$ (792)	$31^{3}/_{16}$ (792)	$32^{3}/_{16}$ (817)	$32^{3}/_{16}$ (817)	$32^{3}/_{16}$ (817)	$33^{3}/_{16}$ (843)	$33^{3}/_{16}$ (843)	$33^{3}/_{16}$ (843)
		9	(228)	**(Pre)-09-90VI24**												
		12	(305)	**(Pre)-12-90VI24**												
		18	(457)	**(Pre)-18-90VI24**												
		24	(609)	**(Pre)-24-90VI24**												
		30	(762)	**(Pre)-30-90VI24**												
		36	(914)	**(Pre)-36-90VI24**												

(Pre) See page LDS-12 for catalog number prefix.

All dimensions in parentheses are millimeters unless otherwise specified.
Manufacturing tolerances apply to all dimensions.

Vertical Bend 60° (VO, VI)

1 pair splice plates with hardware included.

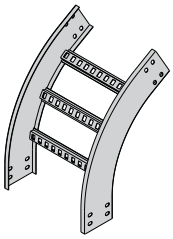

60° Vertical Outside

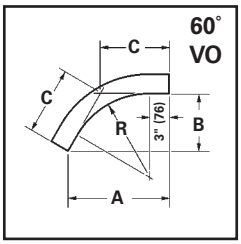

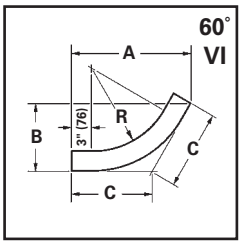

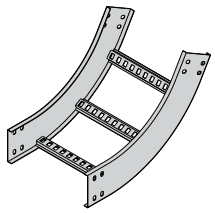

60° Vertical Inside

60° Vertical Outside Bend (VO)

Bend Radius R in.	(mm)	Ladder Width in.	(mm)	Catalog No.	VO Dimensions in. / (mm) All Series Heights A	B	C
12	(300	6	(152)	**(Pre)-06-60VO12**	$14^{7}/_{8}$ (378)	$8^{5}/_{8}$ (219)	$9^{15}/_{16}$ (252)
		9	(228)	**(Pre)-09-60VO12**			
		12	(305)	**(Pre)-12-60VO12**			
		18	(457)	**(Pre)-18-60VO12**			
		24	(609)	**(Pre)-24-60VO12**			
		30	(762)	**(Pre)-30-60VO12**			
		36	(914)	**(Pre)-36-60VO12**			
24	(600	6	(152)	**(Pre)-06-60VO24**	$25^{5}/_{16}$ (643)	$14^{5}/_{8}$ (371)	$16^{7}/_{8}$ (428)
		9	(228)	**(Pre)-09-60VO24**			
		12	(305)	**(Pre)-12-60VO24**			
		18	(457)	**(Pre)-18-60VO24**			
		24	(609)	**(Pre)-24-60VO24**			
		30	(762)	**(Pre)-30-60VO24**			
		36	(914)	**(Pre)-36-60VO24**			

(Pre) See page LDS-12 for catalog number prefix.

60° Vertical Inside Bend (VI)

Bend Radius R in.	(mm)	Ladder Width in.	(mm)	Catalog No.	VI Dimensions in. / (mm) Series 14 Steel A	B	C	Series 15 Steel A	B	C	Series 16 Steel A	B	C	Series 17 Steel A	B	C
12	(305)	6	(152)	**(Pre)-06-60VI12**	$18^{1}/_{16}$ (459)	$10^{7}/_{16}$ (265)	12 (305)	$18^{1}/_{2}$ (470)	$10^{11}/_{16}$ (271)	$12^{3}/_{8}$ (314)	$19^{3}/_{8}$ (492)	$11^{3}/_{16}$ (284)	$12^{15}/_{16}$ (328)	$20^{1}/_{4}$ (514)	$11^{11}/_{16}$ (297)	$13^{1}/_{2}$ (343)
		9	(228)	**(Pre)-09-60VI12**												
		12	(305)	**(Pre)-12-60VI12**												
		18	(457)	**(Pre)-18-60VI12**												
		24	(609)	**(Pre)-24-60VI12**												
		30	(762)	**(Pre)-30-60VI12**												
		36	(914)	**(Pre)-36-60VI12**												
24	(609)	6	(152)	**(Pre)-06-60VI24**	$28^{7}/_{16}$ (722)	$16^{7}/_{16}$ (417)	$18^{15}/_{16}$ (481)	$28^{15}/_{16}$ (735)	$16^{11}/_{16}$ (424)	$19^{1}/_{4}$ (489)	$29^{3}/_{4}$ (755)	$17^{3}/_{16}$ (436)	$19^{7}/_{8}$ (505)	$30^{5}/_{8}$ (778)	$17^{11}/_{16}$ (449)	$20^{7}/_{16}$ (519)
		9	(228)	**(Pre)-09-60VI24**												
		12	(305)	**(Pre)-12-60VI24**												
		18	(457)	**(Pre)-18-60VI24**												
		24	(609)	**(Pre)-24-60VI24**												
		30	(762)	**(Pre)-30-60VI24**												
		36	(914)	**(Pre)-36-60VI24**												

(Pre) See page LDS-12 for catalog number prefix.

Manufacturing tolerances apply to all dimensions.

Vertical Bend 45° (VO, VI)

1 pair splice plates with hardware included.

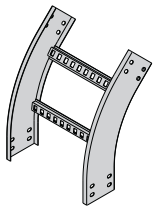

45° Vertical Outside

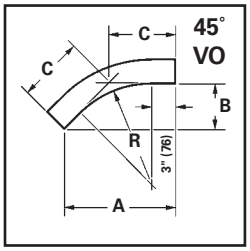

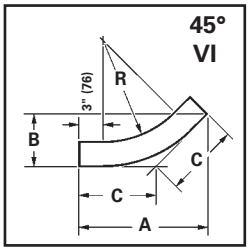

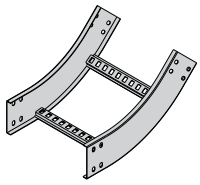

45° Vertical Inside

45° Vertical Outside Bend (VO)

Bend Radius R in.	(mm)	Ladder Width in.	(mm)	Catalog No.	VO Dimensions in. / (mm) All Series Heights A	B	C
12	(300)	6	(152)	**(Pre)-06-45VO12**	$13\frac{5}{8}$ (346)	$5\frac{5}{8}$ (143)	8 (203)
		9	(228)	**(Pre)-09-45VO12**			
		12	(305)	**(Pre)-12-45VO12**			
		18	(457)	**(Pre)-18-45VO12**			
		24	(609)	**(Pre)-24-45VO12**			
		30	(762)	**(Pre)-30-45VO12**			
		36	(914)	**(Pre)-36-45VO12**			
24	(600)	6	(152)	**(Pre)-06-45VO24**	$22\frac{1}{16}$ (560)	$9\frac{1}{8}$ (232)	$12\frac{15}{16}$ (328)
		9	(228)	**(Pre)-09-45VO24**			
		12	(305)	**(Pre)-12-45VO24**			
		18	(457)	**(Pre)-18-45VO24**			
		24	(609)	**(Pre)-24-45VO24**			
		30	(762)	**(Pre)-30-45VO24**			
		36	(914)	**(Pre)-36-45VO24**			

(Pre) See page LDS-12 for catalog number prefix.

45° Vertical Inside Bend (VI)

Bend Radius R in.	(mm)	Ladder Width in.	(mm)	Catalog No.	VI Dimensions in. / (mm) Series 14 Steel A	B	C	Series 15 Steel A	B	C	Series 16 Steel A	B	C	Series 17 Steel A	B	C
12	(305)	6	(152)	**(Pre)-06-45VI12**	$16\frac{3}{16}$ (411)	$6\frac{11}{16}$ (170)	$9\frac{1}{2}$ (241)	$16\frac{9}{16}$ (420)	$6\frac{7}{8}$ (174)	$9\frac{11}{16}$ (246)	$17\frac{1}{4}$ (438)	$7\frac{3}{16}$ (182)	$10\frac{1}{8}$ (257)	18 (457)	$7\frac{7}{16}$ (189)	$10\frac{9}{16}$ (268)
		9	(228)	**(Pre)-09-45VI12**												
		12	(305)	**(Pre)-12-45VI12**												
		18	(457)	**(Pre)-18-45VI12**												
		24	(609)	**(Pre)-24-45VI12**												
		30	(762)	**(Pre)-30-45VI12**												
		36	(914)	**(Pre)-36-45VI12**												
24	(609)	6	(152)	**(Pre)-06-45VI24**	$24\frac{11}{16}$ (627)	$10\frac{3}{16}$ (259)	$14\frac{7}{16}$ (367)	$25\frac{1}{16}$ (662)	$10\frac{3}{8}$ (263)	$11\frac{11}{16}$ (373)	$25\frac{3}{4}$ (654)	$10\frac{11}{16}$ (271)	$15\frac{1}{16}$ (382)	$26\frac{1}{2}$ (673)	11 (279)	$15\frac{1}{2}$ (394)
		9	(228)	**(Pre)-09-45VI24**												
		12	(305)	**(Pre)-12-45VI24**												
		18	(457)	**(Pre)-18-45VI24**												
		24	(609)	**(Pre)-24-45VI24**												
		30	(762)	**(Pre)-30-45VI24**												
		36	(914)	**(Pre)-36-45VI24**												

(Pre) See page LDS-12 for catalog number prefix.

Manufacturing tolerances apply to all dimensions.

Vertical Bend 30° (VO, VI)

1 pair splice plates with hardware included.

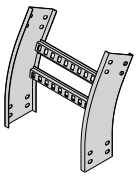

30° Vertical Outside

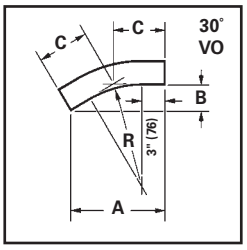

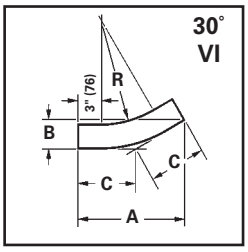

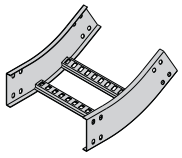

30° Vertical Inside

30° Vertical Outside Bend (VO)

Bend Radius R in.	(mm)	Ladder Width in.	(mm)	Catalog No.	VO Dimensions in. / (mm) All Series Heights A	B	C
12	(300)	6	(152)	(Pre)-06-30VO12	$11\frac{5}{8}$ (295)	$3\frac{1}{8}$ (79)	$6\frac{3}{16}$ (157)
		9	(228)	(Pre)-09-30VO12			
		12	(305)	(Pre)-12-30VO12			
		18	(457)	(Pre)-18-30VO12			
		24	(609)	(Pre)-24-30VO12			
		30	(762)	(Pre)-30-30VO12			
		36	(914)	(Pre)-36-30VO12			
24	(600)	6	(152)	(Pre)-06-30VO24	$17\frac{5}{8}$ (448)	$4\frac{11}{16}$ (110)	$9\frac{7}{16}$ (240)
		9	(228)	(Pre)-09-30VO24			
		12	(305)	(Pre)-12-30VO24			
		18	(457)	(Pre)-18-30VO24			
		24	(609)	(Pre)-24-30VO24			
		30	(762)	(Pre)-30-30VO24			
		36	(914)	(Pre)-36-30VO24			

(Pre) See page LDS-12 for catalog number prefix.

30° Vertical Inside Bend (VI)

Bend Radius R in.	(mm)	Ladder Width in.	(mm)	Catalog No.	VI Dimensions in. / (mm) Series 14 Steel A	B	C	Series 15 Steel A	B	C	Series 16 Steel A	B	C	Series 17 Steel A	B	C
12	(305)	6	(152)	(Pre)-06-30VI12	$13\frac{7}{16}$ (341)	$3\frac{5}{8}$ (92)	$7\frac{3}{16}$ (182)	$13\frac{11}{16}$ (347)	$3\frac{11}{16}$ (93)	$7\frac{5}{16}$ (186)	$14\frac{3}{16}$ (360)	$3\frac{13}{16}$ (97)	$7\frac{5}{8}$ (193)	$14\frac{11}{16}$ (373)	$3\frac{15}{16}$ (100)	$7\frac{7}{8}$ (200)
		9	(228)	(Pre)-09-30VI12												
		12	(305)	(Pre)-12-30VI12												
		18	(457)	(Pre)-18-30VI12												
		24	(609)	(Pre)-24-30VI12												
		30	(762)	(Pre)-30-30VI12												
		36	(914)	(Pre)-36-30VI12												
24	(609)	6	(152)	(Pre)-06-30VI24	$19\frac{7}{16}$ (494)	$5\frac{3}{16}$ (132)	$10\frac{7}{16}$ (265)	$19\frac{11}{16}$ (500)	$5\frac{5}{16}$ (135)	$10\frac{9}{16}$ (268)	$20\frac{3}{16}$ (513)	$5\frac{7}{16}$ (138)	$10\frac{13}{16}$ (274)	$20\frac{11}{16}$ (525)	$5\frac{9}{16}$ (141)	$11\frac{1}{16}$ (281)
		9	(228)	(Pre)-09-30VI24												
		12	(305)	(Pre)-12-30VI24												
		18	(457)	(Pre)-18-30VI24												
		24	(609)	(Pre)-24-30VI24												
		30	(762)	(Pre)-30-30VI24												
		36	(914)	(Pre)-36-30VI24												

(Pre) See page LDS-12 for catalog number prefix.

Manufacturing tolerances apply to all dimensions.

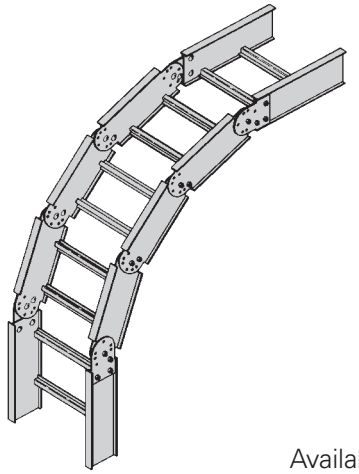

Vertical Bend Segments (VBS)

Adjustable Vertical Bends are made up of one or more vertica bend segments and can be used as a vertical inside (VI) or vertical outside (VO) bend. This design provides for vertical changes in direction with angles of 45˚, 60˚ and 90˚ for 12" (305 mm) or 24" (609 mm) radius. The chart below shows the number of segments required for the various combinations of angles and radii. The VBS-1, VBS-2 and VBS-3 include one, two or three segments respectively with splice plates and hardware. Holes for setting standard angles are pre-punched in each segment. Other angles can be set by field drilling another hole for the locking bolt.

Available for 148P and 148G only.

Nominal Bend Radius		Catalog No.	Dimensions											
			VO						VI					
			A		B		R		A		B		R	
in.	(mm)		in.	(mm)	in.	(mm)	in.	(mm)	in.	(mm)	in.	(mm)	in.	(mm)
90˚ Vertical Inside or Outside														
12	(305)	**14(*)†-(‡)-VBS-1**	8¼	(210)	8¼	(210)	6½	(165)	12⅛	(303)	12⅛	(303)	10½	(267)
24	(609)	**14(*)†-(‡)-VBS-3**	24	(610)	24	(610)	22¼	(565)	27⅞	(708)	27⅞	(708)	26¼	(667)
60˚ Vertical Inside or Outside														
12	(305)	**14(*)†-(‡)-VBS-1**	11¾	(298)	6½	(165)	12	(305)	14¾	(375)	8½	(216)	16	(406)
24	(609)	**14(*)†-(‡)-VBS-2**	11¾	(298)	6½	(165)	12	(305)	14¾	(375)	8½	(216)	16	(406)
45˚ Vertical Inside or Outside														
12	(305)	**14(*)†-(‡)-VBS-1**	12¾	(324)	5¼	(133)	17⅛	(435)	15½	(394)	6⅞	(175)	21	(540)
24	(609)	**14(*)†-(‡)-VBS-1**	12¾	(324)	5¼	(133)	17⅛	(435)	15½	(394)	6⅞	(175)	21	(540)

Notes:
1. (*) Insert material type: P=Pre Galvanized, G=HDGAF
2. (†) Contact home office for information on Ventilated Trough and Solid Trough availability
3. (‡) Insert width 6, 9, 12, 18, 24, 30, 36

Fitting Hole Pattern

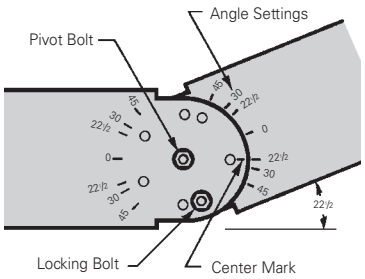

Setting the Angle
To find correct angle setting, divide angle of offset by the number of segments plus one. The result is equal to the angle setting stamped on the vertical bend segment and the splice plate. After inserting center pivot bolt, align the mark at the end of the segment or splice plate with the angle and insert locking bolt in the pre-punched hole.

Example: 90˚ bend, 24" radius requires 3 segments
3 segments + 1 = 4
90˚ divided by 4 = 22½˚
Set all vertical segments at 22½˚

VBS-1 (1 Segment)

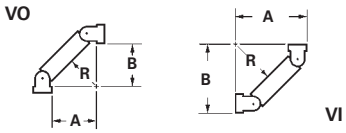

VBS-2 (2 Segments)

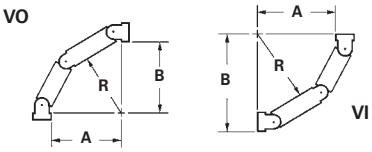

VBS-3 (3 Segments)

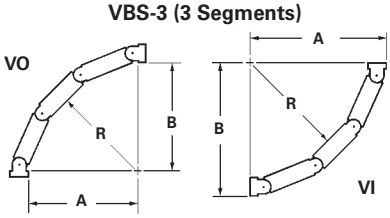

Offset Dimensions

One vertical bend segment can be used to complete a vertical offset. Offset dimensions are shown.

Angle ø	A		B	
	in.	(mm)	in.	(mm)
45˚	12	305	8½	216
30˚	14	355	5¾	146
22½˚	14¼	362	5	127

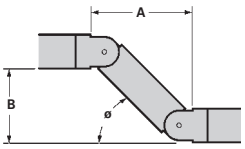

Dimensions in parentheses are in millimeters unless otherwise specified.

Slotted Steel Cable Ladder

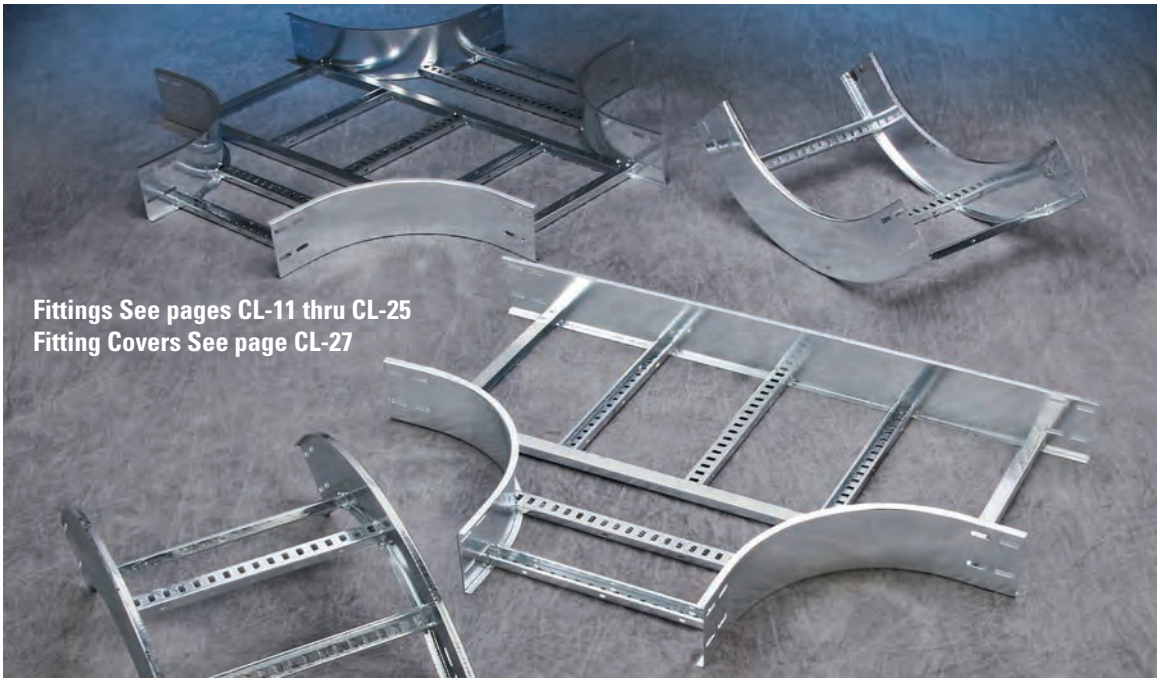

Cable Ladder Construction - Side Rails

B-Line cable ladder side rails features the I-Beam shape to provide system integrity. The I-Beam is the most efficient structural shape, providing strength without increasing the weight of the side rail itself. This shape, in conjunction with the slots in the side rails, offers the optimum design.

In addition, the I-Beam shape has a number of other advantages:

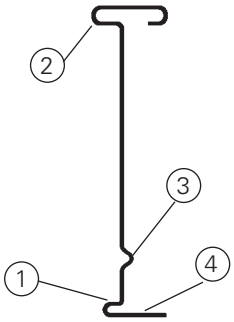

1) Roll-formed steel increases the strength of the steel itself
2) Enlarged top flange adds stiffness to the system
3) Bend in side rail to lock in rung position and provide more surface area for a solid weld
4) Bottom rail surface provides positive support for rungs
5) Slotted side rail design reduces installation time

Profile Dimensions

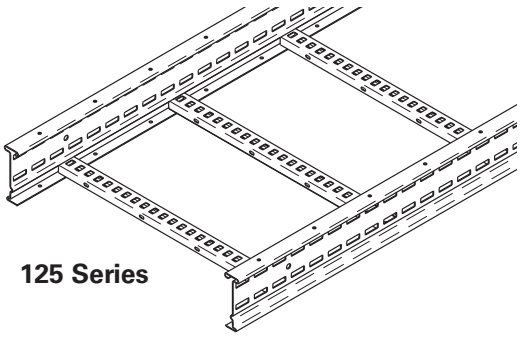

125 Series

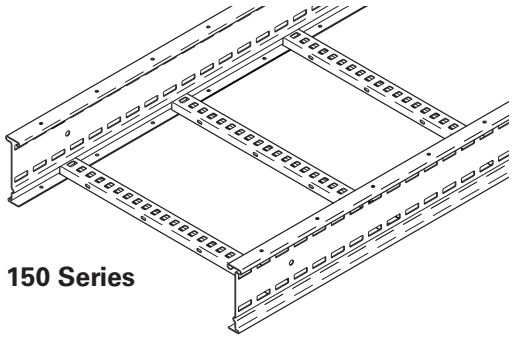

150 Series

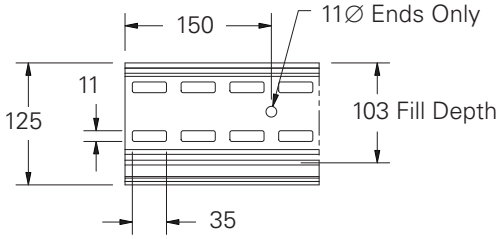

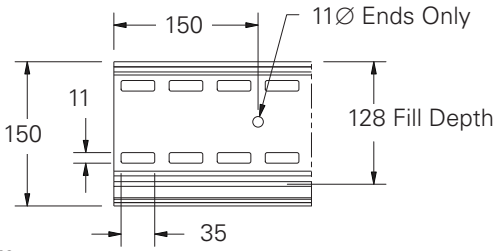

Dimensions are in mm

Side Rails: Strength and Safe Working Load

Side rails provide the strength of the ladder system. The load ratings for the side rails in this catalog are based on testing to IEC 61537, 2006 Edition, Test Type 2 as well as Simple Beam Tests per NEMA VE1. Values in the catalog load charts are based upon allowable deflection and safe working loads calculated using a 1.5 factor of safety. All cable ladders in this catalog will support without collapse a 90.7kg (200 lbs.) concentrated load above published loads. Cable ladders must be supported on spans shorter than or equal to the length of the ladder used.

High Performance Ladder (HPL) Series

Straight Section Part Numbering

Prefix — Suffix

Example: **125 X 300 C D 12I LL - 0600 - 3000**

Height (mm)	Material	* Rung Spacing (mm)	* Rung Shape	* Rung Orientation	Side Rail	Ladder Straight Section	Width (mm)	Length (mm)
125 150	X = Stainless Steel 316	200 300	C Profile	D = Down	12I = HPL Series		0150 0300 0450 0600 0750 0900	3000 6000

* Other Options Available - See "Cable Ladder Construction"

Splice plates not supplied with straight sections. One (1) pair required to connect to system. See pages CL-6.

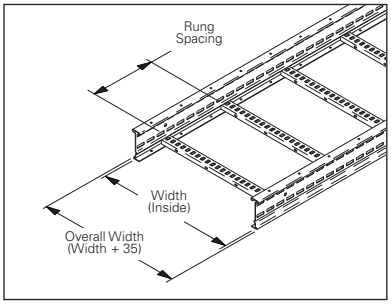

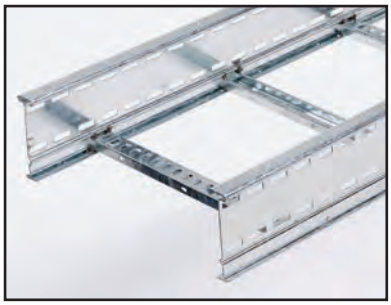

Certification # HOU-470-13-216

Approval # 13-HS1047406-PDA

Height	Material		Tray Width 150mm	300mm	450mm	600mm	750mm	900mm
150mm	SS6	kg/m	4.8	5.3	5.7	6.2	7.0	7.5
		Strength to Weight Ratio*	81.5	73.8	68.6	63.1	55.9	52.1
150mm	SS6	kg/m	4.8	5.3	5.7	6.2	7.0	7.5
		Strength to Weight Ratio*	81.5	73.8	68.6	63.1	55.9	52.1

* Strength to Weight Ratio determined by dividing 3m span load by weight.
† All tests conducted per IEC 61537 Test Type II with LHD-123X, 900mm width, and 300mm rung spacing.

Height	Side Rail Dimensions	Series	Material	Span (m)	Loads † (kg/m)
125mm	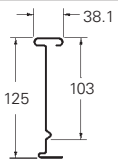	HPL	SS6	3	345
				4	166
				5	99
				6	90
150mm	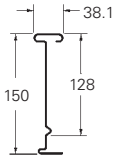	HPL	SS6	3	391
				4	212
				5	130
				6	98

Dimensions in parentheses are in millimeters unless otherwise specified.

Standard Duty Ladder (SDL) & Heavy Duty Ladder (HDL) Series

Straight Section Part Numbering

Prefix — Suffix

Example: **125 G 300 C D 15I LL - 0600 - 3000**

Height (mm)	Material	* Rung Spacing (mm)	* Rung Shape	* Rung Orientation	Side Rail	Ladder Straight Section	Width (mm)	Length (mm)
125 150	G = Galvanized Steel X = Stainless Steel 316	200 300	C Profile	D = Down	15I = SDL Series 20I = HDL Series		0150 0300 0450 0600 0750 0900	3000 6000

* Other Options Available - See "Cable Ladder Construction"

Splice plates not supplied with straight sections. One (1) pair required to connect to system. See pages CL-6.

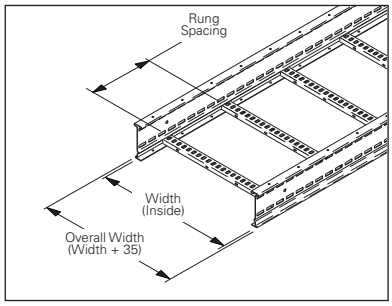

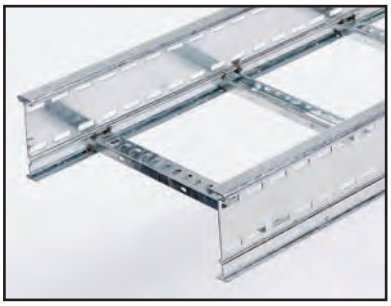

Approval # 13-HS1047406-PDA

Height	Side Rail Dimensions	Series	Material	Span (m)	Loads (kg/m)	Material	Span (m)	Loads (kg/m)
125mm	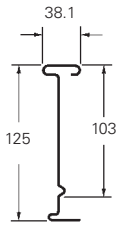	SDL	HDG	3	420	SS6	3	441
				4	310		4	323
				5	200		5	206
				6	90		6	88
		HDL	HDG	3	442	SS6	3	458
				4	341		4	340
				5	241		5	223
				6	140		6	105
150mm	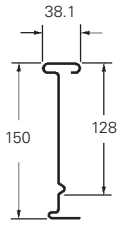	SDL	HDG	3	525	SS6	3	474
				4	394		4	356
				5	263		5	239
				6	132		6	121
		HDL	HDG	3	577	SS6	3	482
				4	446		4	368
				5	315		5	254
				6	184		6	140

All tests conducted per IEC 61537 Test Type II with 900mm width, and 300mm rung spacing.

Dimensions in parentheses are in millimeters unless otherwise specified.

Steel Cable Ladder - HPL, SDL, HDL - Weights

HPL Series Cable Ladder

Height	Material	Series		Tray Width 150mm	300mm	450mm	600mm	750mm	900mm
150mm	SS6	HPL	kg/m	4.4	4.8	5.3	5.7	6.6	7.1
			STWR*	78.4	71.9	65.1	60.5	52.3	48.6
150mm	SS6	HPL	kg/m	4.8	5.3	5.7	6.2	7.0	7.5
			STWR*	81.5	73.8	68.6	63.1	55.9	52.1

STWR = Strength to Weight Ratio

SDL & HDL Series Cable Ladder

Height	Material	Series		Tray Width 150mm	300mm	450mm	600mm	750mm	900mm
125mm	HDG	SDL	kg/m	5.7	6.2	6.7	7.2	8.4	9.0
			STWR*	73.7	67.7	62.7	58.3	50.0	46.7
		HDL	kg/m	7.3	7.8	8.3	8.8	10.0	10.7
			STWR*	60.5	56.7	53.3	50.2	44.2	41.3
	SS6	SDL	kg/m	5.3	5.8	6.2	6.7	7.8	8.4
			STWR*	83.2	76.0	71.1	65.8	56.5	52.5
		HDL	kg/m	6.8	7.3	7.7	8.2	9.3	9.9
			STWR*	67.4	62.7	59.5	55.9	49.2	46.3
150mm	HDG	SDL	kg/m	6.3	6.8	7.3	7.8	9.0	9.6
			STWR*	83.3	77.2	71.9	67.3	58.3	54.7
		HDL	kg/m	8.2	8.7	9.2	9.7	10.9	11.5
			STWR*	70.4	66.3	62.7	59.5	52.9	50.2
	SS6	SDL	kg/m	5.9	6.3	6.8	7.2	8.4	9.0
			STWR*	80.3	75.2	69.7	65.8	56.4	52.7
		HDL	kg/m	7.6	8.1	8.5	9.0	10.1	10.7
			STWR*	63.4	59.5	56.7	53.6	47.7	45.0

STWR = Strength to Weight Ratio

* Strength to Weight Ratio determined by dividing 3m span load by weight.
Weights are for 300mm rung spacing, C-rung, slotted side rail.

To download all ladder weights, visit www.cooperbline.com/iec.

Standard Splice Plates

- Not included with straight sections or fittings.
- Standard 8-slot pattern.
- Supplied in pairs with hardware.
- (*) Insert G or SS6

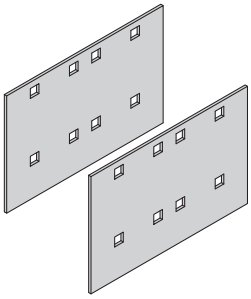

Ladder Height mm	Catalog No.
125	**LSP125(*)**
150	**LSP150(*)**

Expansion Splice Plates

- Expansion plates allow for 25mm expansion or contraction of the cable ladder, or where expansion joints occur in the supporting structure.
- Supplied in pairs with hardware.
- (*) Insert G or SS6

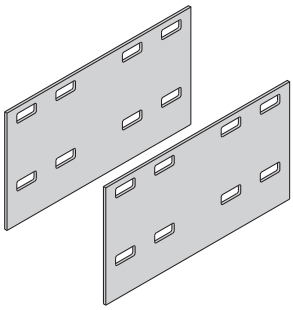

Ladder Height mm	Catalog No.
125	**LES125(*)**
150	**LES150(*)**

Vertical Adjustable Splice Plates

- These plates provide for changes in elevation that do not conform to standard vertical fittings.
- Supplied in pairs with hardware.
- **Bonding Jumpers are not required.**
- (*) Insert G or SS6

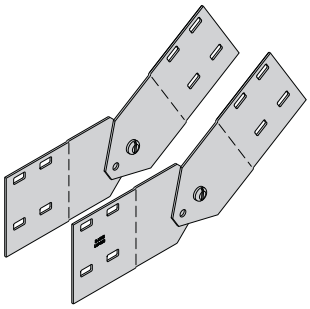

Ladder Height mm	Catalog No.
125	**LVA125(*)**
150	**LVA150(*)**

Reversing Splice Plates

- For reversing ladder orientation.
- Supplied as one pair with hardware.
- (*) Insert G or SS6

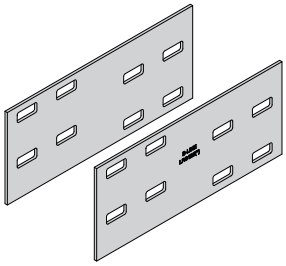

Ladder Height mm	Catalog No.
125	**LRS125(*)**
150	**LRS150(*)**

Horizontal Adjustable Splice Plates

- Offered to adjust a cable ladder run for changes in direction in a horizontal plane that do not conform to standard horizontal fittings.
- Supplied in pairs with hardware.
- Rail extensions 1000mm length standard, LHA splices included.
- (*) Insert G or SS6

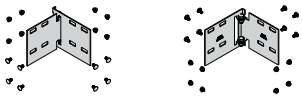

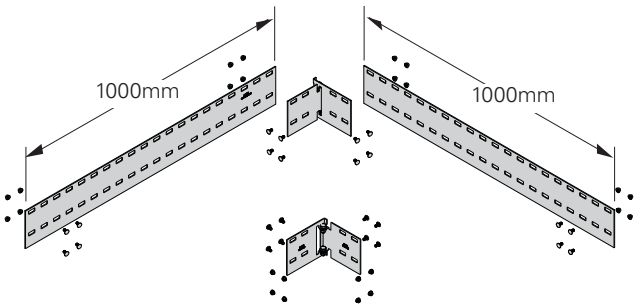

Splice Kit

Ladder Height mm	Catalog No.
125	**LHA125(*)**
150	**LHA150(*)**

Rail Extension Kit

Ladder Height mm	Catalog No.
125	**LRE125(*)**
150	**LRE150(*)**

Dimensions in parentheses are in millimeters unless otherwise specified.

Reducing Coupler Plate

- For offset transitions.
- Supplied as one plate with hardware.
- (*) Insert G or SS6

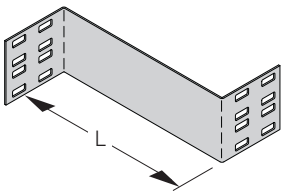

Ladder Height mm	Catalog No.	'L' mm
125	LSR125(*)150	150
	LSR125(*)300	300
	LSR125(*)450	450
	LSR125(*)600	600
	LSR125(*)750	750
150	LSR150(*)150	150
	LSR150(*)300	300
	LSR150(*)450	450
	LSR150(*)600	600
	LSR150(*)750	750

Splice Hardware

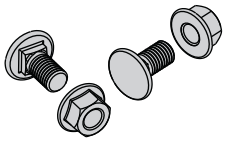

Catalog No.	Description
M10x20 SNCB(*)	Square Neck Coach Bolt
M10 SFHN(*)	Serrated Flange Hex Nut
M10 ELAS(*)	Elastic Stop Nut

Finish (*): HDG = Hot Dipped Galvanized
SS6 = Stainless Steel 316

Heavy Duty Expansion Splice Plates

Heavy Duty Expansion Splice Plates are engineered to eliminate the recommended additional support at each expansion joint where cable ladder systems are utilized. They allow installers to support an expansion joint without additional supports versus the traditional two supports.

Expansion joints are common in long-run outdoor applications where temperature variations result in thermal expansion and contraction of the cable ladder system. The installer using the traditional expansion splice would be required to install two supports, one on either side of the expansion joint. By utilizing the B-Line Heavy Duty Expansion Splice Plate, no additional supports are required.

- NEMA VE 2 Compliant
- Lowest total cost of installation solution
- Wrap-around design supports the side rail on bottom of each ladder section
- Available Offering:
  - o Hot dip galvanized steel
  - o Stainless steel 316
- Designed for easy installation in a variety of applications
- Supplied in pairs with hardware
- Utilize with B-Line Cable Ladder Systems
  - o HPL, SDL, & HDL

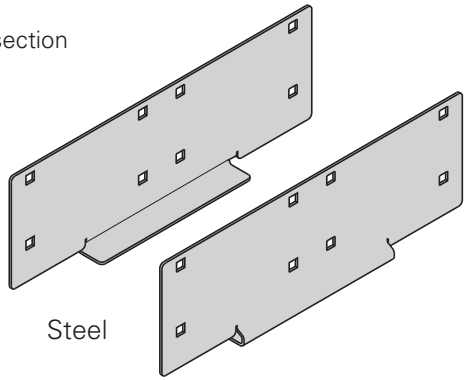

Heavy Duty Expansion Splice Plates are one of five key attributes of the B-Line cable ladder system that combine to yield significant opportunities to reduce structural steel supports in heavy industrial applications by up to 66%. To learn more, visit **www.cooperbline.com/sss**.

Ladder Height mm	Catalog No. HDG	Catalog No. SS6
125	LHE125G	LHE125SS6
150	LHE150G	LHE150SS6

Tee/Wall Connector

- For field connecting ladder to a wall or to another ladder as a tee.
- Supplied in pairs with hardware.
- (*) Insert G or SS6

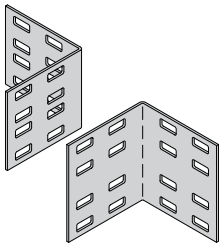

Ladder Height mm	Catalog No.
125	**LTC125(*)**
150	**LTC150(*)**

Bonding Jumper

Use at each expansion splice and where the cable ladder is not mechanically/electrically continuous to ground.

- Sold individually.
- Hardware included.
- Bonding jumper is 406mm long.

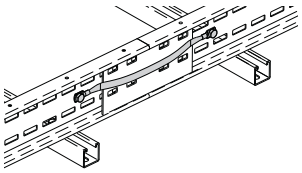

Catalog No.	Copper Wire	Ampacity
99-N1	9 Strands #1	600

Blind End

- For finished look to end of ladder.
- Supplied as one plate with hardware.
- (*) Insert G or SS6

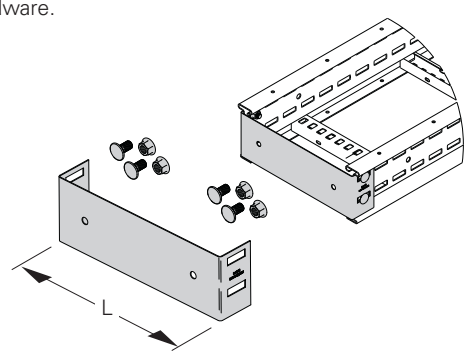

Ladder Ht. mm	Catalog No.	'L' mm
125	**LBE125(*)150**	150
	LBE125(*)300	300
	LBE125(*)450	450
	LBE125(*)600	600
	LBE125(*)750	750
	LBE125(*)900	900
150	**LBE150(*)150**	150
	LBE150(*)300	300
	LBE150(*)450	450
	LBE150(*)600	600
	LBE150(*)750	750
	LBE150(*)900	900

Ladder Drop-Out

- Specially-designed Ladder Drop-Outs provide a rounded surface with 100mm radius to protect cable as it exits from the cable ladder, preventing damage to insulation. The drop-out will attach to any desired rung.
- Supplied with hardware.
- (*) Insert G or SS6

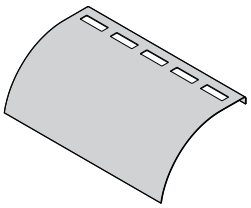

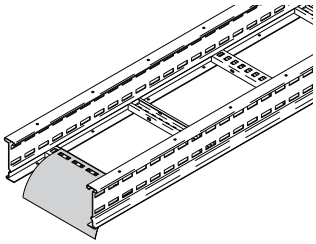

Catalog No.	Ladder Width mm
LDO(*)150	150
LDO(*)300	300
LDO(*)450	450
LDO(*)600	600
LDO(*)750	750
LDO(*)900	900

Threaded Rod (ATR) & Rod Coupling

Loading based on safety factor 5.

See B-Line Strut Systems Catalog for other size and finish options.

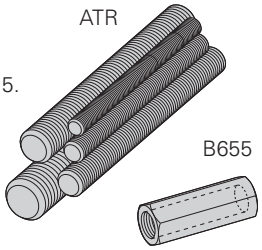

Catalog No. & Size	Thread Size	Recommended Load kN	Wt./ 30.5m kg	Coupling No.
ATR M6	M6	1.32	6.1	**B655-M6ZN**
ATR M8	M8	2.42	10.7	**B655-M8ZN**
ATR M10	M10	3.66	15.3	**B655-M10ZN**
ATR M12	M12	5.35	24.4	**B655-M12ZN**

Dimensions in parentheses are in millimeters unless otherwise specified.

Slotted Steel Cable Ladder - Accessories

Cable Ladder Clamp/Guide - SDL & HDL Series

- Features a no-twist design.
- Has four times the strength of the traditional design.
- Each side is labelled to ensure proper installation.
- Supplied in pairs without hardware.
- (*) Insert G or SS6

Patent # RE35479

Catalog No.	Overall Length	Hardware Size
9(*)-1204	38mm	M6
9(*)-1208	57mm	M10
9(*)-1205	57mm	M12

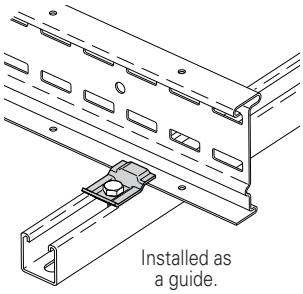

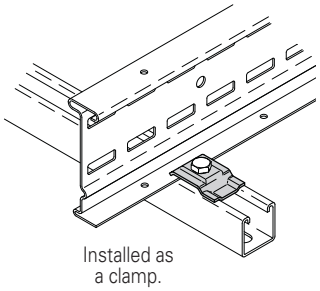

When installing this device as an expansion guide on the outside flange of *Side Rail*, use the Catalog No. **B202** Square Washer (see page BF-24) in order to properly elevate the guide.

Cable Ladder Clamp/Guide - HPL Series

- Improves performance - see HPL Series Load Tables below
- Both LHD-121X and LHD-123X are sold in pairs
  LHD-121X - requires mounting hardware (not included)
  LHD-123X includes side rail attachment hardware - requires mounting hardware (not included)
- Material: SS6
- Thickness: 6mm
- Patent Pending

Catalog Number	Description	Side Rail Mtg. Hardware	Mounting Hardware
LHD-121X	1-Hole Hold Down Plate	None Required	(1) M12 HHCS
LHD-123X	3-Hole Hold Down Clamp	Includes (2) M10 SNCB & SFHN	(1) M12 HHCS

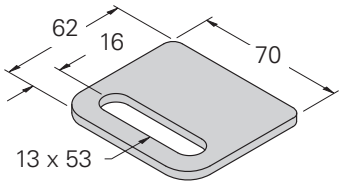

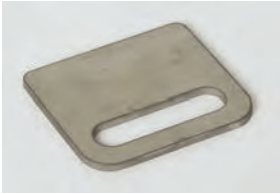

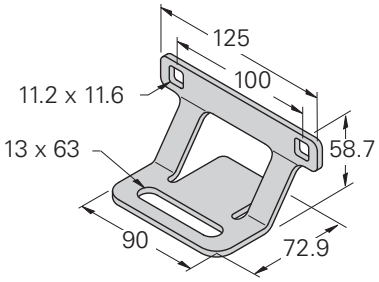

Height	Material	LHD-123X	Span m	Loads kg/m	LHD-121X	Span m	Loads kg/m
HPL Series 125mm	**SS6**		3	345		3	293
			4	166		4	143
			5	99		5	86
			6	90		6	79

Height	Material	LHD-123X	Span m	Loads kg/m	LHD-121X	Span m	Loads kg/m
HPL Series 150mm	**SS6**		3	391		3	345
			4	212		4	184
			5	130		5	113
			6	98		6	96

Dimensions in parentheses are in millimeters unless otherwise specified.

Straight Divider

- Standard length: 3000mm (3m) or 1000mm (1m).
- Order catalog number based on loading depth.
- Supplied with mounting hardware.
- Supplied with 99-9982 divider splice.
- (*) Insert G or SS6

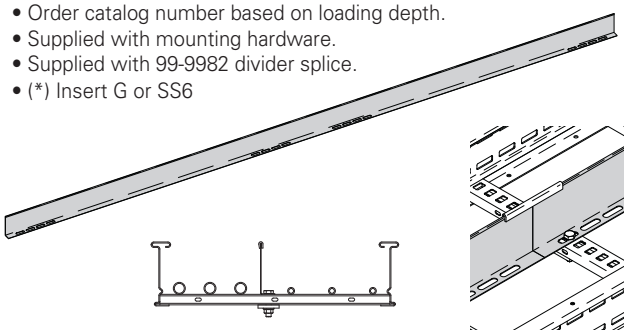

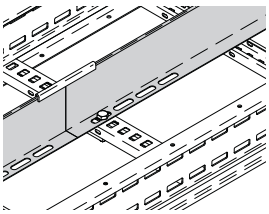

Catalog No.	Side Rail Height mm	Length mm
LSD125(*)-3000	125	3000
LSD150(*)-3000	150	3000

Bendable Divider

- Horizontal Bend Barriers are flexible in order to conform to any horizontal fitting radius. Cut to length.
- Order catalog number based on loading depth.
- Supplied with mounting hardware.
- Standard length is 1000mm (1m), sold individually.
- Supplied with 99-9982 divider splice.
- (*) Insert G or SS6

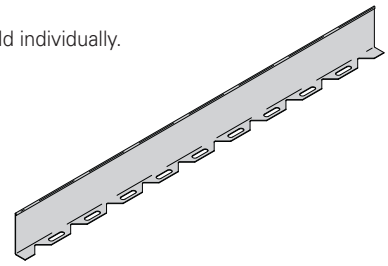

Catalog No.	Side Rail Height mm	Length mm
LBD125(*)-1000	125	1000
LBD150(*)-1000	150	1000

Vertical Dividers

- Vertical Bend Barriers are preformed to conform to a specific vertical fitting.
- Supplied with mounting hardware and a 99-9982 Divider Splice.
- (*) Insert G or SS6 for finish
- (**) Insert 30, 45, 60 or 90 for degrees
- (***) Insert 300 for 300mm, 600 for 600mm, 900 for 900mm, or 1200 for 1200mm for radius

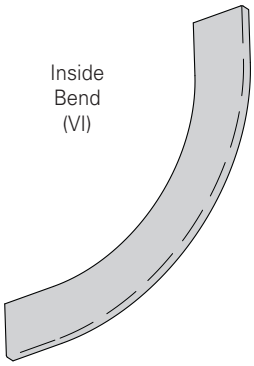

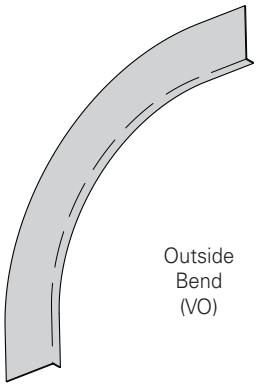

Side Rail Height	Catalog No. Inside Bend	Catalog No. Outside Bend	Divider Height mm
125	**LID125(*)(**)(***)**	**LOD125(*)(**)(***)**	100
150	**LID150(*)(**)(***)**	**LOD150(*)(**)(***)**	125

Divider Splice

- Plastic splice holds adjoining barrier strips in straight alignment.

Catalog No.
99-9982

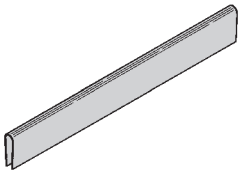

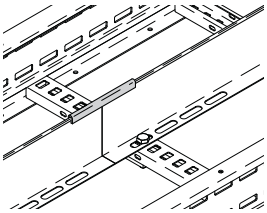

Steel Cable Ladder

Dimensions in parentheses are in millimeters unless otherwise specified.

Slotted Steel Cable Ladder - Fittings

B-Line Cable Ladder Fittings are designed to support cables as they transition directions. Side rails are C-shaped with standard 300mm rung spacing.

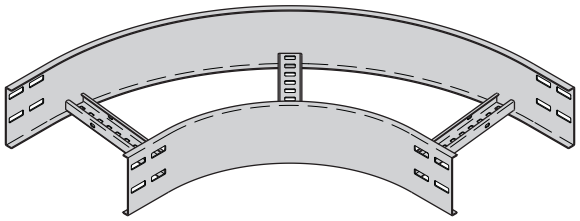

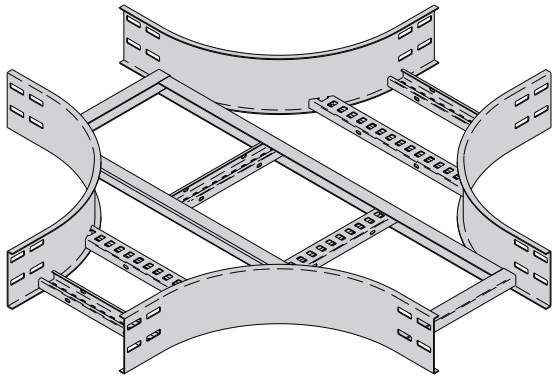

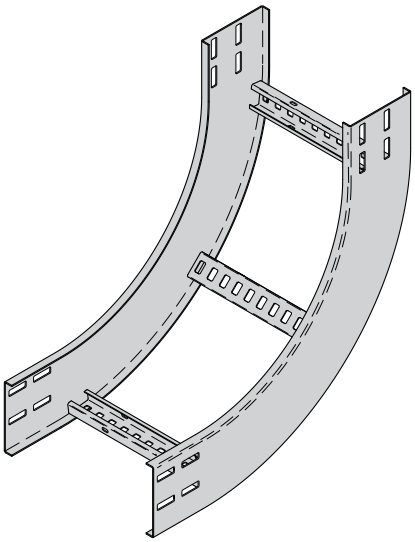

Fittings engineered with 100mm tangents for splicing integrity.

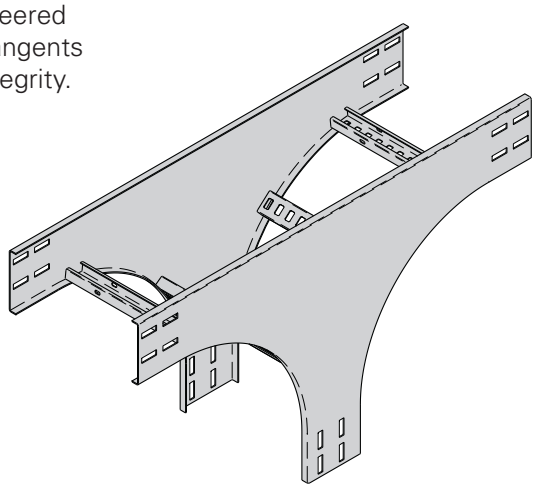

Fittings Part Numbering

Prefix | Suffix

Example: **125 G 300 C D 20C LVO - 0600 - 90 R0600**

Height (mm)	Material	Rung Spacing (mm)	* Rung Shape	* Rung Orientation	Side Rail	Ladder Fitting Type	Width (mm)	Angle † (°)	Radius (mm)
125 = 125mm	** **G** = Galvanized Steel	**300** = 300mm	**C** = Standard Profile	**D** = Down	**12C** = HPL Series	**LHB** = Horizontal Bend	**0150** = 150mm	**30**	**R0300** = 300mm
150 = 150mm	**X** = Stainless Steel 316				**15C** = SDL Series	**LVI** = Vertical Inside Bend	**0300** = 300mm	**45**	**R0450** = 450mm
					20C = HDL Series	**LVO** = Vertical Outside Bend	**0450** = 450mm	**60**	**R0600** = 600mm
						LHT = Horizontal Tee †	**0600** = 600mm	**90**	**R0750** = 750mm
						LHX = Horizontal Cross †	**0750** = 750mm		**R0900** = 900mm
						LVTD = Vertical Tee Down †	**0900** = 900mm		**R1200** = 1200mm
						LVTU = Vertical Tee Up †			
						LCSF = Cable Support Fitting †			

*** Other Options Available**
See "Cable Ladder Construction"

**** Not Available with HPL Series**

† No angle designation required on these fittings.
See fitting page when creating part numbers.

All dimensions are in millimeters unless otherwise specified.

Horizontal Bends 90° (LHB)

Splice plates not supplied with fittings.
Order standard splice plates separately from page CL-6.
One (1) pair required to connect to system.

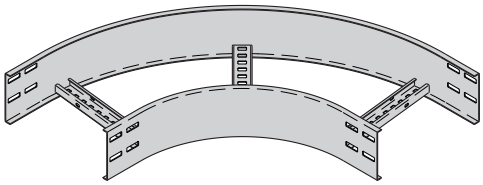

90˚ Horizontal Bend

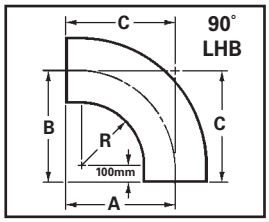

Bend Radius R mm	Ladder Width mm	90˚ Horizontal Bend Catalog No.	Dimensions A mm	B mm	C mm
300	150	**(Prefix)LHB-0150-90R0300**	475	475	475
	300	**(Prefix)LHB-0300-90R0300**	550	550	550
	450	**(Prefix)LHB-0450-90R0300**	625	625	625
	600	**(Prefix)LHB-0600-90R0300**	700	700	700
	750	**(Prefix)LHB-0750-90R0300**	775	775	775
	900	**(Prefix)LHB-0900-90R0300**	850	850	850
600	150	**(Prefix)LHB-0150-90R0600**	775	775	775
	300	**(Prefix)LHB-0300-90R0600**	850	850	850
	450	**(Prefix)LHB-0450-90R0600**	925	925	925
	600	**(Prefix)LHB-0600-90R0600**	1000	1000	1000
	750	**(Prefix)LHB-0750-90R0600**	1075	1075	1075
	900	**(Prefix)LHB-0900-90R0600**	1150	1150	1150

(Prefix) See page CL-11 for catalog number prefix.
Width dimensions are to inside wall. Manufacturing tolerances apply to all dimensions.

Note: For 450mm, 750mm, 900mm, and 1200mm bend radius dimensions, download submittals at www.bline.com/iec

Horizontal Bends 60° (LHB)

Splice plates not supplied with fittings.
Order standard splice plates separately from page CL-6.
One (1) pair required to connect to system.

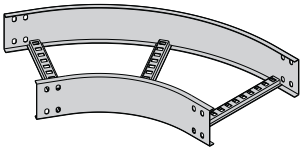

60˚ Horizontal Bend

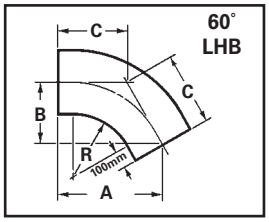

Bend Radius R mm	Ladder Width mm	60˚ Horizontal Bend Catalog No.	Dimensions A mm	B mm	C mm
300	150	**(Prefix)LHB-0150-60R0300**	476	275	317
	300	**(Prefix)LHB-0300-60R0300**	541	312	360
	450	**(Prefix)LHB-0450-60R0300**	606	350	404
	600	**(Prefix)LHB-0600-60R0300**	670	387	447
	750	**(Prefix)LHB-0750-60R0300**	735	425	490
	900	**(Prefix)LHB-0900-60R0300**	800	425	534
600	150	**(Prefix)LHB-0150-60R0600**	735	425	490
	300	**(Prefix)LHB-0300-60R0600**	800	462	534
	450	**(Prefix)LHB-0450-60R0600**	865	500	577
	600	**(Prefix)LHB-0600-60R0600**	930	537	620
	750	**(Prefix)LHB-0750-60R0600**	995	575	663
	900	**(Prefix)LHB-0900-60R0600**	1060	612	707

(Prefix) See page CL-11 for catalog number prefix.
Width dimensions are to inside wall. Manufacturing tolerances apply to all dimensions.

Note: For 450mm, 750mm, 900mm, and 1200mm bend radius dimensions, download submittals at www.bline.com/iec

Horizontal Bends 45° (LHB)

Splice plates not supplied with fittings.
Order standard splice plates separately from page CL-6.
One (1) pair required to connect to system.

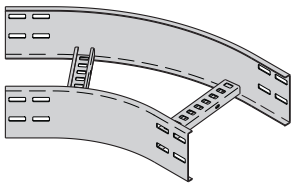

45˚ Horizontal Bend

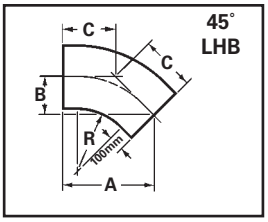

Bend Radius R mm	Ladder Width mm	45˚ Horizontal Bend Catalog No.	Dimensions A mm	B mm	C mm
300	150	(Prefix)LHB-0150-45R0300	437	181	256
	300	(Prefix)LHB-0300-45R0300	490	203	287
	450	(Prefix)LHB-0450-45R0300	543	225	318
	600	(Prefix)LHB-0600-45R0300	596	247	349
	750	(Prefix)LHB-0750-45R0300	649	269	380
	900	(Prefix)LHB-0900-45R0300	702	291	411
600	150	(Prefix)LHB-0150-45R0600	649	269	380
	300	(Prefix)LHB-0300-45R0600	702	291	411
	450	(Prefix)LHB-0450-45R0600	755	313	443
	600	(Prefix)LHB-0600-45R0600	809	335	474
	750	(Prefix)LHB-0750-45R0600	862	357	505
	900	(Prefix)LHB-0900-45R0600	915	379	536

(Prefix) See page CL-11 for catalog number prefix.
Width dimensions are to inside wall. Manufacturing tolerances apply to all dimensions.

Note: For 450mm, 750mm, 900mm, and 1200mm bend radius dimensions, download submittals at www.bline.com/iec

Horizontal Bends 30° (LHB)

Splice plates not supplied with fittings.
Order standard splice plates separately from page CL-6.
One (1) pair required to connect to system.

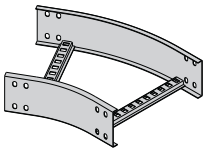

30˚ Horizontal Bend

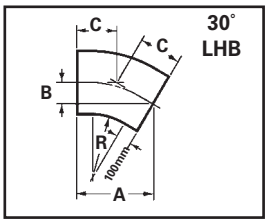

Bend Radius R mm	Ladder Width mm	30˚ Horizontal Bend Catalog No.	Dimensions A mm	B mm	C mm
300	150	(Prefix)LHB-0150-30R0300	375	100	200
	300	(Prefix)LHB-0300-30R0300	412	110	221
	450	(Prefix)LHB-0450-30R0300	450	120	241
	600	(Prefix)LHB-0600-30R0300	487	130	261
	750	(Prefix)LHB-0750-30R0300	525	140	281
	900	(Prefix)LHB-0900-30R0300	562	150	301
600	150	(Prefix)LHB-0150-30R0600	525	140	281
	300	(Prefix)LHB-0300-30R0600	562	150	301
	450	(Prefix)LHB-0450-30R0600	600	160	321
	600	(Prefix)LHB-0600-30R0600	627	170	341
	750	(Prefix)LHB-0750-30R0600	675	180	361
	900	(Prefix)LHB-0900-30R0600	712	190	381

(Prefix) See page CL-11 for catalog number prefix.
Width dimensions are to inside wall. Manufacturing tolerances apply to all dimensions.

Note: For 450mm, 750mm, 900mm, and 1200mm bend radius dimensions, download submittals at www.bline.com/iec

Vertical Outside Bends 90˚ & 60° (LVO)

Splice plates not supplied with fittings.
Order standard splice plates separately from page CL-6.
One (1) pair required to connect to system.

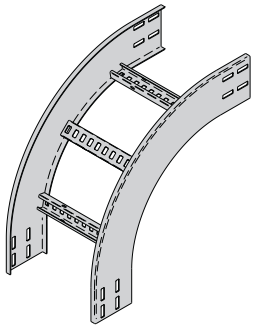

90˚ Vertical Outside

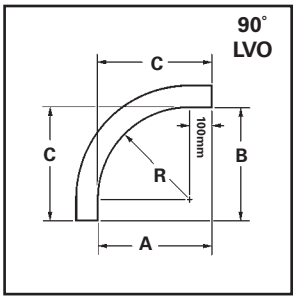

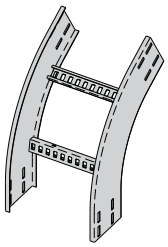

60˚ Vertical Outside

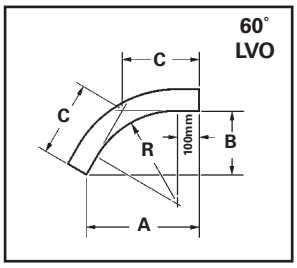

Bend Radius R	Ladder Width Insert	Vert. Outside Bend	VO Side Rail Height 125mm - 150mm A	B	C
mm	mm	Catalog No.	mm	mm	mm
90°					
300	150	**(Prefix)LVO-0150-90R0300**	400	400	400
	300	**(Prefix)LVO-0300-90R0300**			
	450	**(Prefix)LVO-0450-90R0300**			
	600	**(Prefix)LVO-0600-90R0300**			
	750	**(Prefix)LVO-0750-90R0300**			
	900	**(Prefix)LVO-0900-90R0300**			
600	150	**(Prefix)LVO-0150-90R0600**	700	700	700
	300	**(Prefix)LVO-0300-90R0600**			
	450	**(Prefix)LVO-0450-90R0600**			
	600	**(Prefix)LVO-0600-90R0600**			
	750	**(Prefix)LVO-0750-90R0600**			
	900	**(Prefix)LVO-0900-90R0600**			
60°					
300	150	**(Prefix)LVO-0150-60R0300**	410	237	273
	300	**(Prefix)LVO-0390-60R0300**			
	450	**(Prefix)LVO-0450-60R0300**			
	600	**(Prefix)LVO-0600-60R0300**			
	750	**(Prefix)LVO-0750-60R0300**			
	900	**(Prefix)LVO-0900-60R0300**			
600	150	**(Prefix)LVO-0150-60R0600**	670	386	446
	300	**(Prefix)L(VO-0300-60R0600**			
	450	**(Prefix)LVO-0450-60R0600**			
	600	**(Prefix)LVO-0600-60R0600**			
	750	**(Prefix)LVO-0750-60R0600**			
	900	**(Prefix)LVO-0900-60R0600**			

(Prefix) See page CL-11 for catalog number prefix.
Manufacturing tolerances apply to all dimensions.

Note: For 450mm, 750mm, 900mm, and 1200mm bend radius dimensions, download submittals at www.bline.com/iec

All dimensions are in millimeters unless otherwise specified.

Vertical Inside Bends 90˚ & 60° (LVI)

Splice plates not supplied with fittings.
Order standard splice plates separately from page CL-6.
One (1) pair required to connect to system.

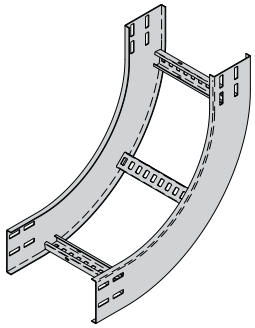

90˚ Vertical Inside

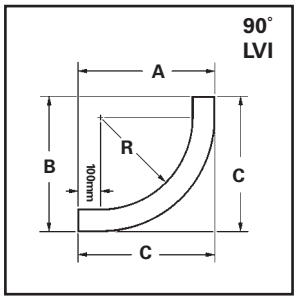

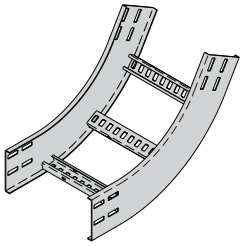

60˚ Vertical Inside

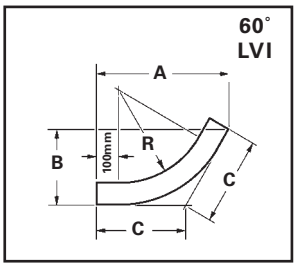

Bend Radius R mm	Ladder Width Insert mm	Vert. Inside Bend Catalog No.	VI Side Rail Height 125mm A mm	125mm B mm	125mm C mm	150mm A mm	150mm B mm	150mm C mm
90°								
300	150	**(Prefix)LVI-0150-90R0300**	525	525	525	550	550	550
	300	**(Prefix)LVI-0300-90R0300**						
	450	**(Prefix)LVI-0450-90R0300**						
	600	**(Prefix)LVI-0600-90R0300**						
	750	**(Prefix)LVI-0750-90R0300**						
	900	**(Prefix)LVI-0900-90R0300**						
600	150	**(Prefix)LVI-0150-90R0600**	825	825	825	850	850	850
	300	**(Prefix)LVI-0300-90R0600**						
	450	**(Prefix)LVI-0450-90R0600**						
	600	**(Prefix)LVI-0600-90R0600**						
	750	**(Prefix)LVI-0750-90R0600**						
	900	**(Prefix)LVI-0900-90R0600**						
60°								
300	150	**(Prefix)LVI-0150-60R0300**	518	300	345	540	312	360
	300	**(Prefix)LVI-0390-60R0300**						
	450	**(Prefix)LVI-0450-60R0300**						
	600	**(Prefix)LVI-0600-60R0300**						
	750	**(Prefix)LVI-0750-60R0300**						
	900	**(Prefix)LVI-0900-60R0300**						
600	150	**(Prefix)LVI-0150-60R0600**	778	449	519	780	462	533
	300	**(Prefix)LVI-0300-60R0600**						
	450	**(Prefix)LVI-0450-60R0600**						
	600	**(Prefix)LVI-0600-60R0600**						
	750	**(Prefix)LVI-0750-60R0600**						
	900	**(Prefix)LVI-0900-60R0600**						

(Prefix) See page CL-11 for catalog number prefix.
Manufacturing tolerances apply to all dimensions.

Note: For 450mm, 750mm, 900mm, and 1200mm bend radius dimensions, download submittals at www.bline.com/iec

Vertical Bends 45˚ & 30° (LVO)

Splice plates not supplied with fittings.
Order standard splice plates separately from page CL-6.
One (1) pair required to connect to system.

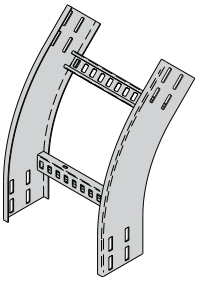

45˚ Vertical Outside

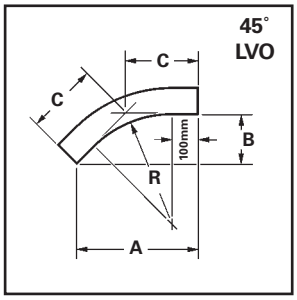

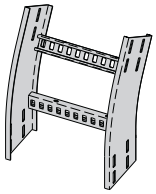

30˚ Vertical Outside

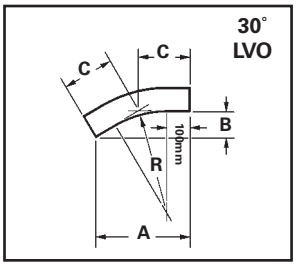

Bend Radius R mm	Ladder Width Insert mm	Vert. Outside Bend Catalog No.	VO Side Rail Height 125mm - 150mm A mm	B mm	C mm
45°					
300	150	**(Prefix)LVO-0150-45R0300**	383	159	226
	300	**(Prefix)LVO-0300-45R0300**			
	450	**(Prefix)LVO-0450-45R0300**			
	600	**(Prefix)LVO-0600-45R0300**			
	750	**(Prefix)LVO-0750-45R0300**			
	900	**(Prefix)LVO-0900-45R0300**			
600	150	**(Prefix)LVO-0150-45R0600**	595	246	373
	300	**(Prefix)LVO-0300-45R0600**			
	450	**(Prefix)LVO-0450-45R0600**			
	600	**(Prefix)LVO-0600-45R0600**			
	750	**(Prefix)LVO-0750-45R0600**			
	900	**(Prefix)LVO-0900-45R0600**			
30°					
300	150	**(Prefix)LVO-0150-30R0300**	337	90	180
	300	**(Prefix)LVO-0390-30R0300**			
	450	**(Prefix)LVO-0450-30R0300**			
	600	**(Prefix)LVO-0600-30R0300**			
	750	**(Prefix)LVO-0750-30R0300**			
	900	**(Prefix)LVO-0900-30R0300**			
600	150	**(Prefix)LVO-0150-30R0600**	487	130	261
	300	**(Prefix)L(VO-0300-30R0600**			
	450	**(Prefix)LVO-0450-30R0600**			
	600	**(Prefix)LVO-0600-30R0600**			
	750	**(Prefix)LVO-0750-30R0600**			
	900	**(Prefix)LVO-0900-30R0600**			

(Prefix) See page CL-11 for catalog number prefix.
Manufacturing tolerances apply to all dimensions.

Note: For 450mm, 750mm, 900mm, and 1200mm bend radius dimensions, download submittals at www.bline.com/iec

Vertical Bends 45˚ & 30° (LVI)

Splice plates not supplied with fittings.
Order standard splice plates separately from page CL-6.
One (1) pair required to connect to system.

45˚ Vertical Inside

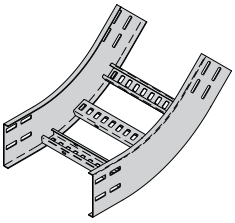

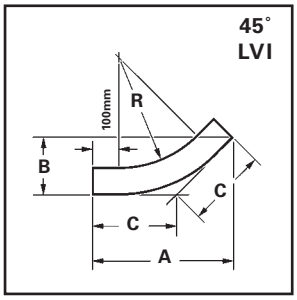

30˚ Vertical Inside

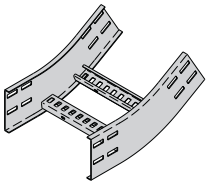

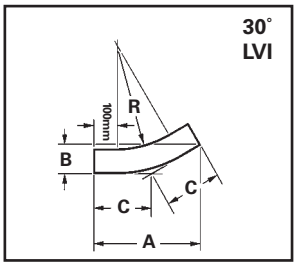

Bend Radius R	Ladder Width Insert	Vert. Inside Bend	VI Side Rail Height					
			125mm			150mm		
			A	B	C	A	B	C
mm	mm	Catalog No.	mm	mm	mm	mm	mm	mm
45°								
300	150	**(Prefix)LVI-0150-45R0300**	469	195	276	681	283	400
	300	**(Prefix)LVI-0300-45R0300**						
	450	**(Prefix)LVI-0450-45R0300**						
	600	**(Prefix)LVI-0600-45R0300**						
	750	**(Prefix)LVI-0750-45R0300**						
	900	**(Prefix)LVI-0900-45R0300**						
600	150	**(Prefix)LVI-0150-45R0600**	487	203	286	699	290	411
	300	**(Prefix)LVI-0300-45R0600**						
	450	**(Prefix)LVI-0450-45R0600**						
	600	**(Prefix)LVI-0600-45R0600**						
	750	**(Prefix)LVI-0750-45R0600**						
	900	**(Prefix)LVI-0900-45R0600**						
30°								
300	150	**(Prefix)LVI-0150-30R0300**	399	107	214	417	110	221
	300	**(Prefix)LVI-0390-30R0300**						
	450	**(Prefix)LVI-0450-30R0300**						
	600	**(Prefix)LVI-0600-30R0300**						
	750	**(Prefix)LVI-0750-30R0300**						
	900	**(Prefix)LVI-0900-30R0300**						
600	150	**(Prefix)LVI-0150-30R0600**	549	147	294	562	150	301
	300	**(Prefix)LVI-0300-30R0600**						
	450	**(Prefix)LVI-0450-30R0600**						
	600	**(Prefix)LVI-0600-30R0600**						
	750	**(Prefix)LVI-0750-30R0600**						
	900	**(Prefix)LVI-0900-30R0600**						

(Prefix) See page CL-11 for catalog number prefix.
Manufacturing tolerances apply to all dimensions.

Note: For 450mm, 750mm, 900mm, and 1200mm bend radius dimensions, download submittals at www.bline.com/iec

Horizontal Tee (LHT)

Splice plates not supplied with fittings.
Order standard splice plates separately from page CL-6.
Two (2) pair required to connect to system.

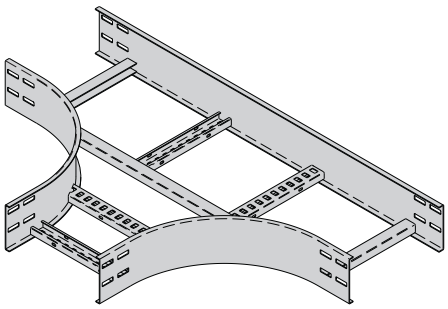

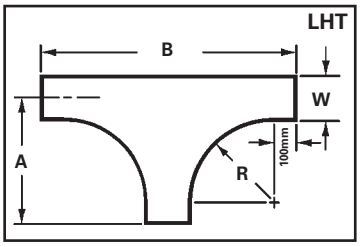

Bend Radius R mm	Ladder Width mm	Horizontal Cross Catalog Number	Dimensions A mm	Dimensions B mm
300	150	(Prefix)LHT-0150-R0300	475	950
	300	(Prefix)LHT-0300-R0300	550	1000
	450	(Prefix)LHT-0450-R0300	625	1250
	600	(Prefix)LHT-0600-R0300	700	1400
	750	(Prefix)LHT-0750-R0300	775	1500
	900	(Prefix)LHT-0900-R0300	850	1700
600	150	(Prefix)LHT-0150-R0600	775	1550
	300	(Prefix)LHT-0300-R0600	850	1700
	450	(Prefix)LHT-0450-R0600	925	1850
	600	(Prefix)LHT-0600-R0600	1000	2000
	750	(Prefix)LHT-0750-R0600	1075	2150
	900	(Prefix)LHT-0900-R0600	1150	2300

(Prefix) See page CL-11 for catalog number prefix.
Width dimensions are to inside wall. Manufacturing tolerances apply to all dimensions.

Note: For 450mm, 750mm, 900mm, and 1200mm bend radius dimensions, download submittals at www.bline.com/iec

Horizontal Cross (LHX)

Splice plates not supplied with fittings.
Order standard splice plates separately from page CL-6.
Three (3) pair required to connect to system.

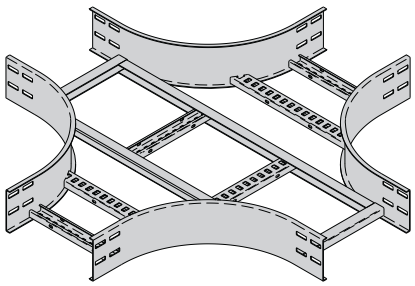

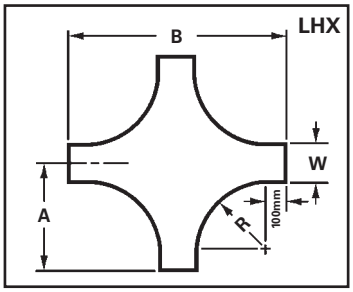

Bend Radius R mm	Ladder Width mm	Horizontal Cross Catalog Number	Dimensions A mm	Dimensions B mm
300	150	(Prefix)LHX-0150-R0300	475	900
	300	(Prefix)LHX-0300-R0300	550	1100
	450	(Prefix)LHX-0450-R0300	625	1250
	600	(Prefix)LHX-0600-R0300	700	1400
	750	(Prefix)LHX-0750-R0300	775	1550
	900	(Prefix)LHX-0900-R0300	850	1700
600	150	(Prefix)LHX-0150-R0600	775	1550
	300	(Prefix)LHX-0300-R0600	850	1700
	450	(Prefix)LHX-0450-R0600	925	1850
	600	(Prefix)LHX-0600-R0600	1000	2000
	750	(Prefix)LHX-0750-R0600	1075	2150
	900	(Prefix)LHX-0900-R0600	1150	2300

(Prefix) See page CL-11 for catalog number prefix.
Width dimensions are to inside wall. Manufacturing tolerances apply to all dimensions.

Note: For 450mm, 750mm, 900mm, and 1200mm bend radius dimensions, download submittals at www.bline.com/iec

All dimensions are in millimeters unless otherwise specified.

Vertical Tee Up/Down (LVTU/LVTD)

Splice plates not supplied with fittings.
Order standard splice plates separately from page CL-6.
Two (2) pair required to connect to system.

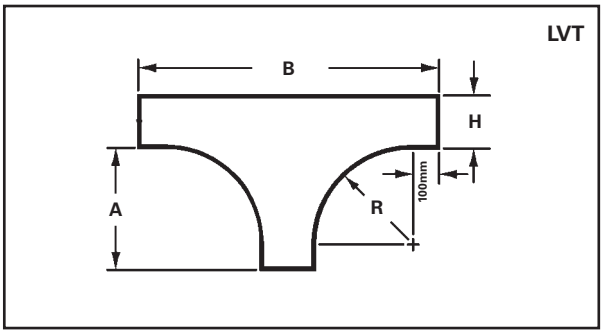

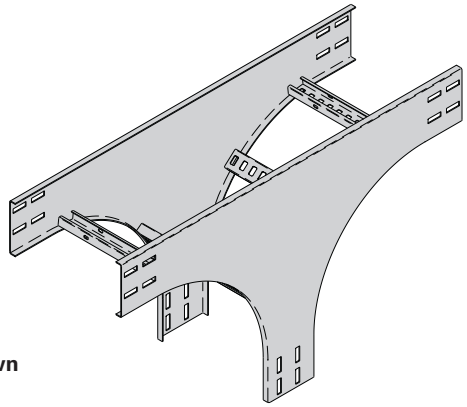

Down

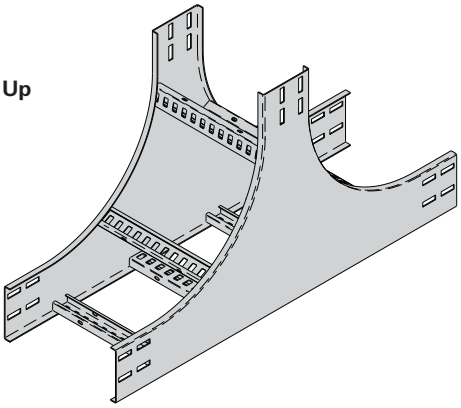

Up

Bend Radius R mm	Ladder Width mm	Vertical Tee Down Down Catalog No.	Vertical Tee Up Up Catalog No.	Side Rail Height "H" 125mm A mm	125mm B mm	150mm A mm	150mm B mm
300	150	(Prefix)LVTD-0150-R0300	(Prefix)LVTU-0150-R0300	400	925	400	950
	300	(Prefix)LVTD-0300-R0300	(Prefix)LVTU-0300-R0300				
	450	(Prefix)LVTD-0450-R0300	(Prefix)LVTU-0450-R0300				
	600	(Prefix)LVTD-0600-R0300	(Prefix)LVTU-0600-R0300				
	750	(Prefix)LVTD-0750-R0300	(Prefix)LVTU-0750-R0300				
	900	(Prefix)LVTD-0900-R0300	(Prefix)LVTU-0900-R0300				
600	150	(Prefix)LVTD-0150-R0600	(Prefix)LVTU-0150-R0600	700	1525	700	1550
	300	(Prefix)LVTD-0300-R0600	(Prefix)LVTU-0300-R0600				
	450	(Prefix)LVTD-0450-R0600	(Prefix)LVTU-0450-R0600				
	600	(Prefix)LVTD-0600-R0600	(Prefix)LVTU-0600-R0600				
	750	(Prefix)LVTD-0750-R0600	(Prefix)LVTU-0750-R0600				
	900	(Prefix)LVTD-0900-R0600	(Prefix)LVTU-0900-R0600				

(Prefix) See page CL-11 for catalog number prefix.
Manufacturing tolerances apply to all dimensions.

Note: For 450mm, 750mm, 900mm, and 1200mm bend radius dimensions, download submittals at www.bline.com/iec

Cable Support Fittings (LCSF)

Splice plates not supplied with fittings.
Order standard splice plates separately from page CL-6.
One (1) pair required to connect to system.

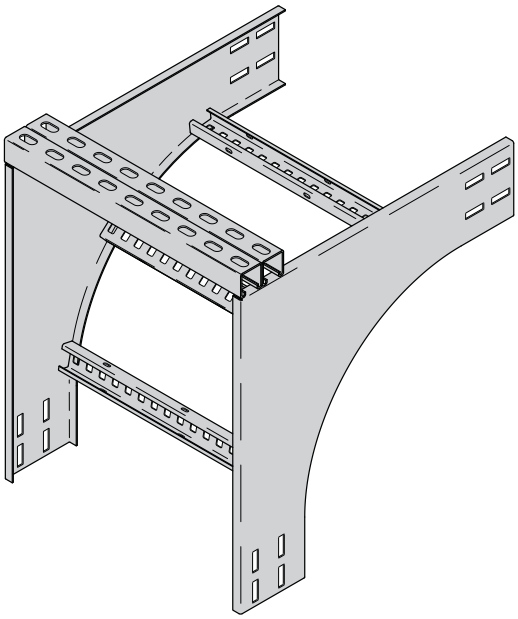

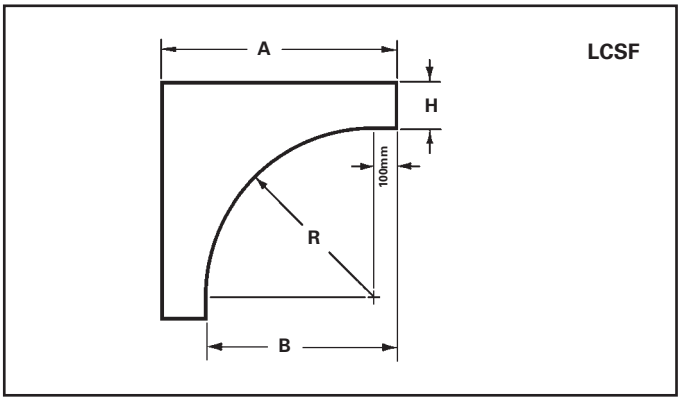

This fitting is recommended for use at the top of vertical runs to support the weight of the cables. The top cross brace is drilled for installing eye bolts, ordered separately.

Bend Radius R mm	Ladder Width mm	Catalog No.	Side Rail Height "H" 125mm A mm	125mm B mm	150mm A mm	150mm B mm
300	150	**(Prefix)LCSF-0150-R0300**	525	400	550	400
	300	**(Prefix)LCSF-0300-R0300**				
	450	**(Prefix)LCSF-0450-R0300**				
	600	**(Prefix)LCSF-0600-R0300**				
	750	**(Prefix)LCSF-0750-R0300**				
	900	**(Prefix)LCSF-0900-R0300**				
600	150	**(Prefix)LCSF-0150-R0600**	825	700	850	700
	300	**(Prefix)LCSF-0300-R0600**				
	450	**(Prefix)LCSF-0450-R0600**				
	600	**(Prefix)LCSF-0600-R0600**				
	750	**(Prefix)LCSF-0750-R0600**				
	900	**(Prefix)LCSF-0900-R0600**				

(Prefix) See page CL-11 for catalog number prefix.
Manufacturing tolerances apply to all dimensions.

Note: For 450mm, 750mm, 900mm, and 1200mm bend radius dimensions, download submittals at www.bline.com/iec

Slotted Steel Cable Ladder - Fittings

B-Line Cable Ladder Reducing and Expanding Fittings are designed to support cables as they transition directions. Side rails are C-shaped with standard 300mm rung spacing.

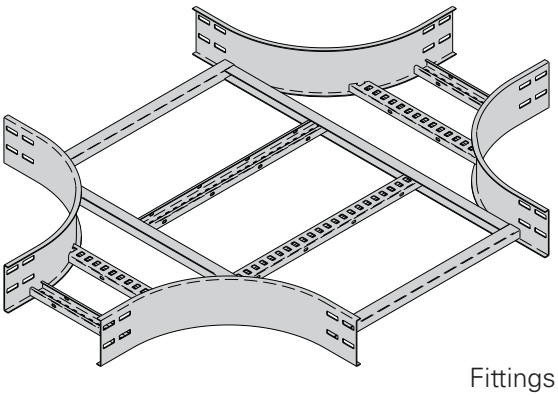

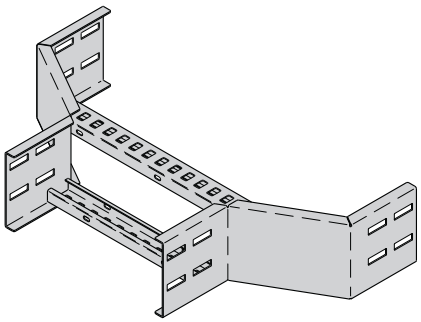

Fittings engineered
with 100mm tangents
for splicing integrity.

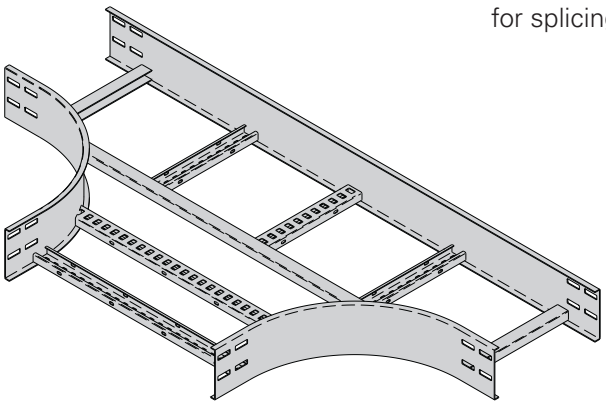

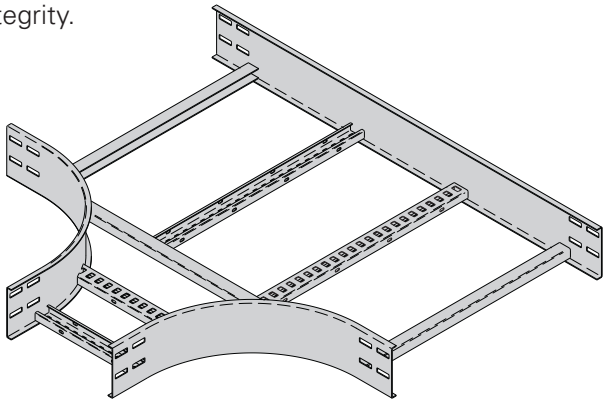

Reducing & Expanding Fittings Part Numbering

Prefix | Suffix

Example: **125 G 300 C D 15C LRR - 0600 - 0300 R0300**

Height	Material	Rung Spacing (mm)	* Rung Shape	* Rung Orientation	Side Rail	Ladder Fitting Type	Width 1	Width 2	Radius
125 = 125mm	** **G** = Galvanized Steel	**300** = 300mm	**C** = Standard Profile	**D** = Down	**12C** = HPL Series	**LRR** = Right Reducer	**0150** = 150mm	**0150** = 150mm	**R0300** = 300mm
150 = 150mm	**X** = Stainless Steel 316				**15C** = SDL Series	**LLR** = Left Reducer	**0300** = 300mm	**0300** = 300mm	**R0450** = 450mm
					20C = HDL Series	**LSR** = Straight Reducer	**0450** = 450mm	**0450** = 450mm	**R0600** = 600mm
						LET = Horizontal Expanding Tee	**0600** = 600mm	**0600** = 600mm	**R0750** = 750mm
						LRT = Horizontal Reducing Tee	**0750** = 750mm	**0750** = 750mm	**R0900** = 900mm
						LRX = Horizontal Expanding/Reducing Cross	**0900** = 900mm	**0900** = 900mm	**R1200** = 1200mm

*** Other Options Available**
See "Cable Ladder Construction"

** Not available with HPL Series

Reducers (LLR, LSR, LRR)

Splice plates not supplied with fittings.
Order standard splice plates separately from page CL-6.
One (1) pair required to connect to system.

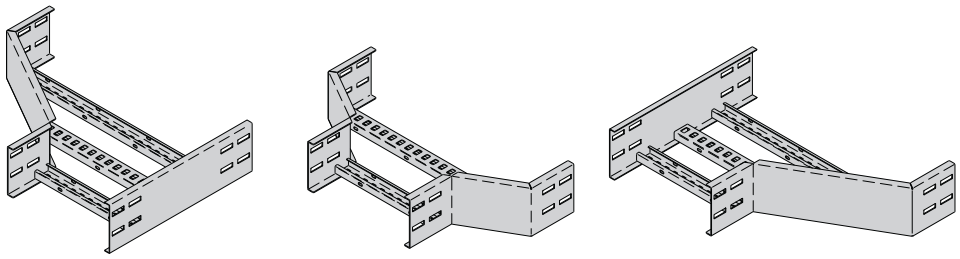

Left Reducer | Straight Reducer | Right Reducer

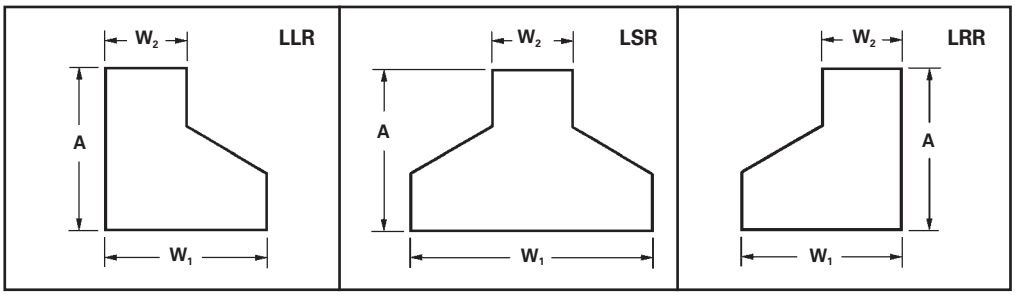

Ladder Width		Left Hand Reducer		Straight Reducer		Right Hand Reducer	
W_1	W_2	Catalog No.	A	Catalog No.	A	Catalog No.	A
mm	mm		mm		mm		mm
300	150	(Prefix)LLR-0300-0150	337	(Prefix)LSR-0300-0150	293	(Prefix)LRR-0300-0150	337
450	150	(Prefix)LLR-0450-0150	423	(Prefix)LSR-0450-0150	337	(Prefix)LRR-0450-0150	423
	300	(Prefix)LLR-0450-0300	337	(Prefix)LSR-0450-0300	293	(Prefix)LRR-0450-0300	337
600	150	(Prefix)LLR-0600-0150	510	(Prefix)LSR-0600-0150	380	(Prefix)LRR-0600-0150	510
	300	(Prefix)LLR-0600-0300	423	(Prefix)LSR-0600-0300	337	(Prefix)LRR-0600-0300	423
	450	(Prefix)LLR-0600-0450	337	(Prefix)LSR-0600-0450	293	(Prefix)LRR-0600-0450	337
750	150	(Prefix)LLR-0750-0150	596	(Prefix)LSR-0750-0150	423	(Prefix)LRR-0750-0150	596
	300	(Prefix)LLR-0750-0300	510	(Prefix)LSR-0750-0300	380	(Prefix)LRR-0750-0300	510
	450	(Prefix)LLR-0750-0450	423	(Prefix)LSR-0750-0450	337	(Prefix)LRR-0750-0450	423
	600	(Prefix)LLR-0750-0600	337	(Prefix)LSR-0750-0600	293	(Prefix)LRR-0750-600	337
900	150	(Prefix)LLR-0900-0150	683	(Prefix)LSR-0900-0150	467	(Prefix)LRR-0900-0150	683
	300	(Prefix)LLR-0900-0300	596	(Prefix)LSR-0900-0300	423	(Prefix)LRR-0900-0300	596
	450	(Prefix)LLR-0900-0450	510	(Prefix)LSR-0900-0450	380	(Prefix)LRR-0900-0450	510
	600	(Prefix)LLR-0900-0600	423	(Prefix)LSR-0900-0600	337	(Prefix)LRR-0900-0600	423
	750	(Prefix)LLR-0900-0750	337	(Prefix)LSR-0900-0750	293	(Prefix)LRR-0900-0750	337

(Prefix) See page CL-21 for catalog number prefix.
Width dimensions are to inside wall.
Manufacturing tolerances apply to all dimensions.

Note: For 450mm, 750mm, 900mm, and 1200mm bend radius dimensions, download submittals at www.bline.com/iec

Horizontal Expanding Tee (LET)

Splice plates not supplied with fittings.
Order standard splice plates separately from page CL-6.
Two (2) pair required to connect to system.

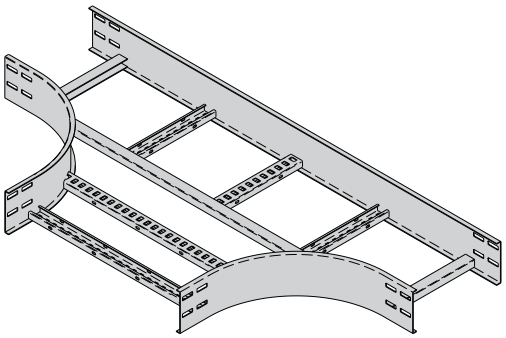

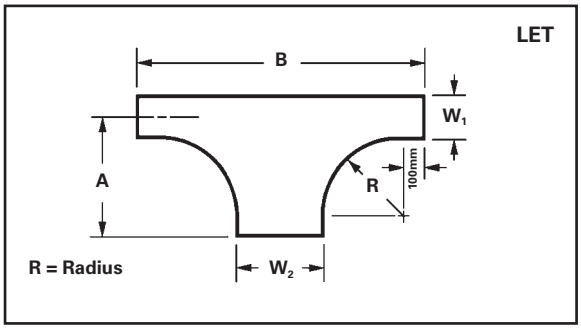

Bend Radius	Ladder Width		Horizontal Expanding Tee	Dimensions	
R mm	W_1 mm	W_2 mm	Catalog Number	A mm	B mm
300	150	300	(Prefix)LET-0150-0300-R0300	475	1100
		450	(Prefix)LET-0150-0450-R0300	475	1250
		600	(Prefix)LET-0150-0600-R0300	475	1400
		750	(Prefix)LET-0150-0750-R0300	475	1550
		900	(Prefix)LET-0150-0900-R0300	475	1700
	300	450	(Prefix)LET-0300-0450-R0300	550	1250
		600	(Prefix)LET-0300-0600-R0300	550	1400
		750	(Prefix)LET-0300-0750-R0300	550	1550
		900	(Prefix)LET-0300-0900-R0300	550	1700
	450	600	(Prefix)LET-0450-0600-R0300	625	1400
		750	(Prefix)LET-0450-0750-R0300	625	1550
		900	(Prefix)LET-0450-0900-R0300	625	1700
	600	750	(Prefix)LET-0600-0750-R0300	700	1550
		900	(Prefix)LET-0600-0900-R0300	700	1700
	750	900	(Prefix)LET-0750-0900-R0300	775	1700
600	150	300	(Prefix)LET-0150-0300-R0600	775	1700
		450	(Prefix)LET-0150-0450-R0600	775	1850
		600	(Prefix)LET-0150-0600-R0600	775	2000
		750	(Prefix)LET-0150-0750-R0600	775	2150
		900	(Prefix)LET-0150-0900-R0600	775	2300
	300	450	(Prefix)LET-0300-0450-R0600	850	1850
		600	(Prefix)LET-0300-0600-R0600	850	2000
		750	(Prefix)LET-0300-0750-R0600	850	2150
		900	(Prefix)LET-0300-0900-R0600	850	2300
	450	600	(Prefix)LET-0450-0600-R0600	925	2000
		750	(Prefix)LET-0450-0750-R0600	925	2150
		900	(Prefix)LET-0450-0900-R0600	925	2300
	600	750	(Prefix)LET-0600-0750-R0600	1000	2150
		900	(Prefix)LET-0600-0900-R0600	1000	2300
	750	900	(Prefix)LET-0750-0900-R0600	1075	2300

(Prefix) See page CL-21 for catalog number prefix.
Width dimensions are to inside wall.
Manufacturing tolerances apply to all dimensions.

Note: For 450mm, 750mm, 900mm, and 1200mm bend radius dimensions, download submittals at www.bline.com/iec

Horizontal Reducing Tee (LRT)

Splice plates not supplied with fittings.
Order standard splice plates separately from page CL-6.
Two (2) pair required to connect to system.

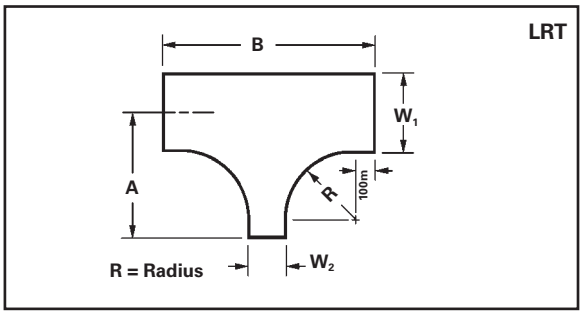

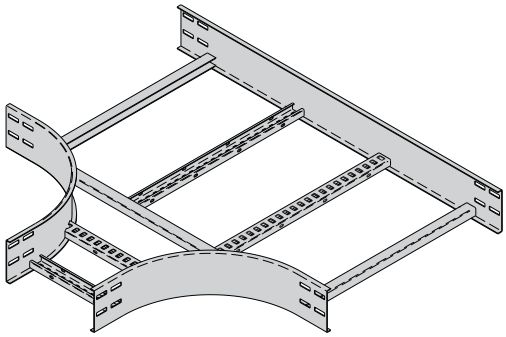

Bend Radius	Ladder Width		Horizontal Reducing Tee	Dimensions	
R mm	W_1 mm	W_2 mm	Catalog Number	A mm	B mm
300	300	150	(Prefix)LRT-0300-0150-R0300	550	950
	450	150	(Prefix)LRT-0450-0150-R0300	625	950
		300	(Prefix)LRT-0450-0300-R0300	625	1100
	600	150	(Prefix)LRT-0600-0150-R0300	700	950
		300	(Prefix)LRT-0600-0300-R0300	700	1100
		450	(Prefix)LRT-0600-0450-R0300	700	1250
	750	150	(Prefix)LRT-0750-0150-R0300	775	950
		300	(Prefix)LRT-0750-0300-R0300	775	1100
		450	(Prefix)LRT-0750-0450-R0300	775	1250
		600	(Prefix)LRT-0750-0600-R0300	775	1400
	900	150	(Prefix)LRT-0900-0150-R0300	850	950
		300	(Prefix)LRT-0900-0300-R0300	850	1100
		450	(Prefix)LRT-0900-0450-R0300	850	1250
		600	(Prefix)LRT-0900-0600-R0300	850	1400
		750	(Prefix)LRT-0900-0750-R0300	850	1550
600	300	150	(Prefix)LRT-0300-0150-R0600	830	1550
	450	150	(Prefix)LRT-0450-0150-R0600	925	1550
		300	(Prefix)LRT-0450-0300-R0600	925	1700
	600	150	(Prefix)LRT-0600-0150-R0600	1000	1550
		300	(Prefix)LRT-0600-0300-R0600	1000	1700
		450	(Prefix)LRT-0600-0450-R0600	1000	1850
	750	150	(Prefix)LRT-0750-0150-R0600	1075	1550
		300	(Prefix)LRT-0750-0300-R0600	1075	1700
		450	(Prefix)LRT-0750-0450-R0600	1075	1850
		600	(Prefix)LRT-0750-0600-R0600	1075	2000
	900	150	(Prefix)LRT-0900-0150-R0600	1150	1550
		300	(Prefix)LRT-0900-0300-R0600	1150	1700
		450	(Prefix)LRT-0900-0450-R0600	1150	1850
		600	(Prefix)LRT-0900-0600-R0600	1150	2000
		750	(Prefix)LRT-0900-0750-R0600	1150	2150

(Prefix) See page CL-21 for catalog number prefix.
Width dimensions are to inside wall.
Manufacturing tolerances apply to all dimensions.

Note: For 450mm, 750mm, 900mm, and 1200mm bend radius dimensions, download submittals at www.bline.com/iec

All dimensions are in millimeters unless otherwise specified.

Horizontal Expanding/Reducing Cross (LRX)

Splice plates not supplied with fittings.
Order standard splice plates separately from page CL-6.
Three (3) pair required to connect to system.

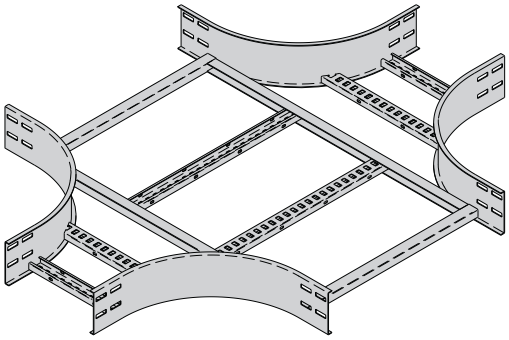

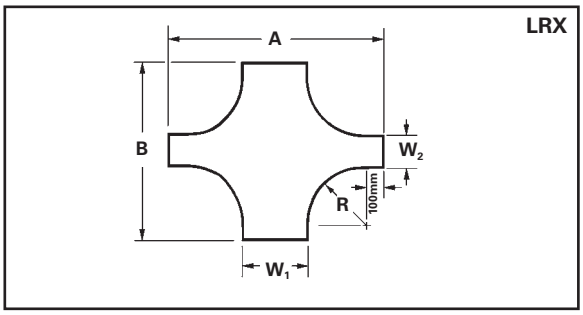

Bend Radius	Ladder Width		Horizontal Reducing Tee	Dimensions	
R mm	W_1 mm	W_2 mm	Catalog Number	A mm	B mm
300	300	150	**(Prefix)LRX-0300-0150-R0300**	1100	950
	450	150	**(Prefix)LRX-0450-0150-R0300**	1250	950
		300	**(Prefix)LRX-0450-0300-R0300**	1250	1100
	600	150	**(Prefix)LRX-0600-0150-R0300**	1400	950
		300	**(Prefix)LRX-0600-0300-R0300**	1400	1100
		450	**(Prefix)LRX-0600-0450-R0300**	1400	1250
	750	150	**(Prefix)LRX-0750-0150-R0300**	1550	950
		300	**(Prefix)LRX-0750-0300-R0300**	1550	1100
		450	**(Prefix)LRX-0750-0450-R0300**	1550	1250
		600	**(Prefix)LRX-0750-0600-R0300**	1550	1400
	900	150	**(Prefix)LRX-0900-0150-R0300**	1700	950
		300	**(Prefix)LRX-0900-0300-R0300**	1700	1100
		450	**(Prefix)LRX-0900-0450-R0300**	1700	1250
		600	**(Prefix)LRX-0900-0600-R0300**	1700	1400
		750	**(Prefix)LRX-0900-0750-R0300**	1700	1550
600	300	150	**(Prefix)LRX-0300-0150-R0600**	1700	1550
	450	150	**(Prefix)LRX-0450-0150-R0600**	1850	1550
		300	**(Prefix)LRX-0450-0300-R0600**	1850	1700
	600	150	**(Prefix)LRX-0600-0150-R0600**	2100	1550
		300	**(Prefix)LRX-0600-0300-R0600**	2100	1700
		450	**(Prefix)LRX-0600-0450-R0600**	2100	1850
	750	150	**(Prefix)LRX-0750-0150-R0600**	2150	1550
		300	**(Prefix)LRX-0750-0300-R0600**	2150	1700
		450	**(Prefix)LRX-0750-0450-R0600**	2150	1850
		600	**(Prefix)LRX-0750-0600-R0600**	2150	2000
	900	150	**(Prefix)LRX-0900-0150-R0600**	2300	1550
		300	**(Prefix)LRX-0900-0300-R0600**	2300	1700
		450	**(Prefix)LRX-0900-0450-R0600**	2300	1850
		600	**(Prefix)LRX-0900-0600-R0600**	2300	2000
		750	**(Prefix)LRX-0900-0750-R0600**	2300	2150

(Prefix) See page CL-21 for catalog number prefix.
Width dimensions are to inside wall.
Manufacturing tolerances apply to all dimensions.

Note: For 450mm, 750mm, 900mm, and 1200mm bend radius dimensions, download submittals at www.bline.com/iec

Covers

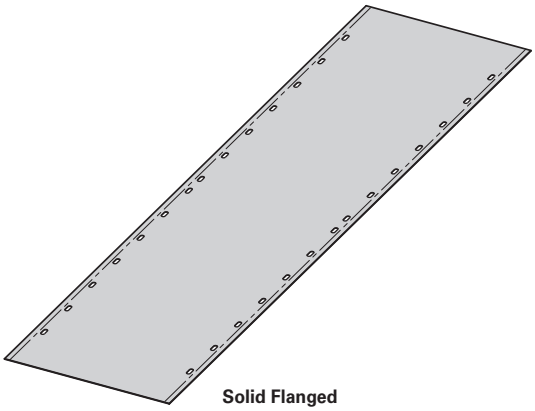

Solid Flanged

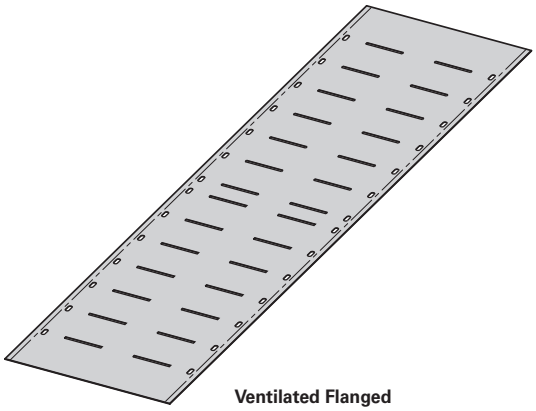

Ventilated Flanged

A full range of covers is available for straight sections and fittings.

Solid covers should be used when maximum enclosure of the cable is desired and no accumulation of heat is expected.

Ventilated covers allow heat to escape.

B-Line recommends that covers be placed on vertical cable ladder runs to a height of 1.5m to 2.5m above the floor to isolate both cables and personnel.

Cover clamps are not included with the cover and must be ordered separately.

Steel Cover Part Numbering

Prefix | Suffix

Example: **CIF S G15 LL - 0600 - 3000**

Flanged Cover

Cover Type

S = Solid

L = Ventilated

P = Peaked

Material

G15 = Galvanized Steel

X10 = Stainless Steel 316

Type

LL = Straight Ladder

Width

0150 = 150mm

0300 = 300mm

0450 = 450mm

0600 = 600mm

0750 = 750mm

0900 = 900mm

Length

3000 = (3.0m)

1500 = (1.5m) for widths 750 (750mm) and 900 (900mm)

Fitting Covers

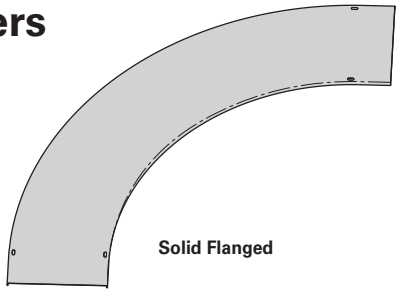

Solid Flanged

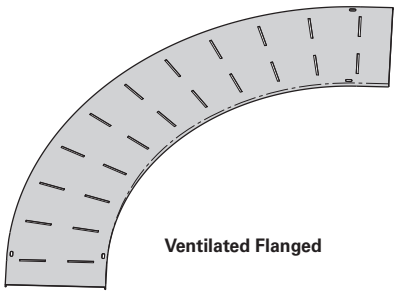

Ventilated Flanged

A full range of covers are available for fittings.

Solid covers should be used when maximum enclosure of the cable is desired and no accumulation of heat is expected.

Ventilated covers allow heat to escape.

B-Line recommends that covers be placed on vertical cable ladder runs to a height of 1.5m to 2.5m above the floor to isolate both cables and personnel.

Flanged covers have a 12mm flange. Cover clamps are not included with the cover and must be ordered separately.

Fitting Covers Part Numbering

Prefix — Suffix

Example: **CCF S G15 LVO - 0600 - 90 R0600 - 150** **(side rail height)**

Flanged Cover	Cover Type	Material
	S = Solid	**G12** =
	L = Louvered	**G15** = Galvanized Steel
	P = Peaked	**X10** = Stainless Steel 316

LHB **Insert LHB Suffix from pages CL-12 & CL-13**
LVI **Insert LVI Suffix from pages CL-15 & CL-17**
LVO **Insert LVO Suffix from pages CL-14 & CL-16 & Side Rail Height**
LHT **Insert LHT Suffix from page CL-18**
LHX **Insert LHX Suffix from page CL-18**
LVTD **Insert LVTD Suffix from page CL-19 & Side Rail Height**
LVTU **Insert LVTU Suffix from page CL-19**
LCSF **Insert LCSF Suffix from page CL-20 & Side Rail Height**

Expanding & Reducing Fitting Covers Part Numbering

Prefix — Suffix

Example: **CCF S X10 LRR - 0600 - 0300 R0300**

Flanged Cover	Cover Type	Material
	S = Solid	**G12** =
	L = Louvered	**G15** = Galvanized Steel
	P = Peaked	**X10** = Stainless Steel 316

LLR **Insert LLR Suffix from pages CL-22**
LRR **Insert LRR Suffix from pages CL-22**
LSR **Insert LSR Suffix from pages CL-22**
LET **Insert LET Suffix from pages CL-23**
LRT **Insert LRT Suffix from pages CL-24**
LRX **Insert LRX Suffix from pages CL-25**

See page CL-28 for cover clamp options.

High Performance Cover Clamp

- Withstands 76m/s (170 MPH) wind loads
- Sold per piece with hardware

(*) Finish: Insert MZ or X for SS6

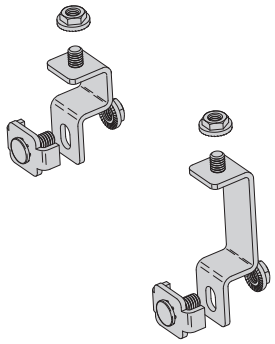

Catalog Number	Description	Raised Height mm	Raised Height In.
LCCSD(*)	Standard Clamp	--	--
LCCSDR(*)	Raised Clamp	35.5	1.4

Number of Clamps for Wind Speeds Up To 76m/s (170 MPH)

Assembly	Cover Size	# of Clamps
Straight	1.5m length	4
Section	3.0m length	6
30° - 60° Horizontal Bend	All radii	4
90°	150mm to 600mm radius	4
Horizontal Bend	900mm to 1200mm radius	6
30° - 60° Vertical Bend	All radii	4
90°	150mm to 600mm radius	4
Vertical Bend	900mm to 1200mm radius	6
Horizontal	150mm to 600mm radius	6
Tee	900mm to 1200mm radius	8
Horizontal	150mm to 600mm radius	8
Cross	900mm to 1200mm radius	12

Visit www.cooperbline.com/ccs for installation instructions and additional clamp quantities for other fittings.

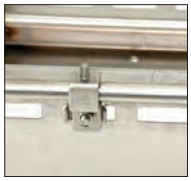

Standard Cover Clamp

- For indoor service only
- Sold per piece with hardware

(*) Finish: Insert G or SS6

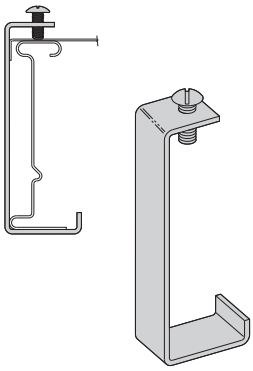

Ladder Height mm	Catalog No.
125	**LCL125(*)**
150	**LCL150(*)**

Quantity of Standard Cover Clamps Required

Assembly	Cover Size	# of Clamps
Straight	1.5m length	4
Section	3.0m length	6
Horizontal & Vertical Bend	All radii	4
Horizontal Tees	All radii	6
Horizontal Crosses	All radii	8

Note: When using the Heavy Duty Cover Clamp, only one-half the number of clamps stated above is required.

Heavy Duty Cover Clamp

- Recommended for outdoor service
- (xx) Insert tray width - 150 to 900
- Includes M10 hardware
- (*) Finishes available: G or SS6

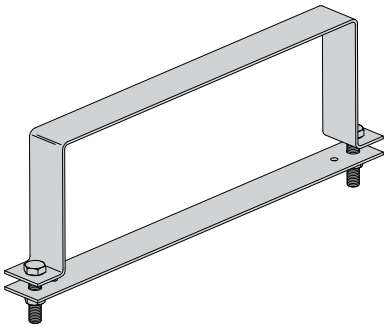

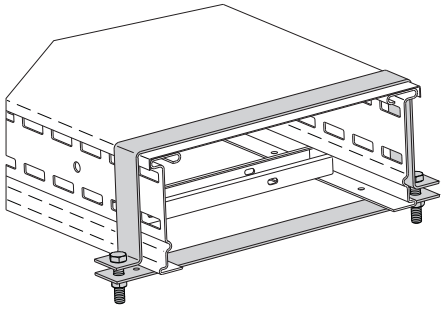

Ladder Height mm	Catalog No.
125	**LCH125(*)(xx)**
150	**LCH150(*)(xx)**

NEMA 12B Rated Aluminum Ladder

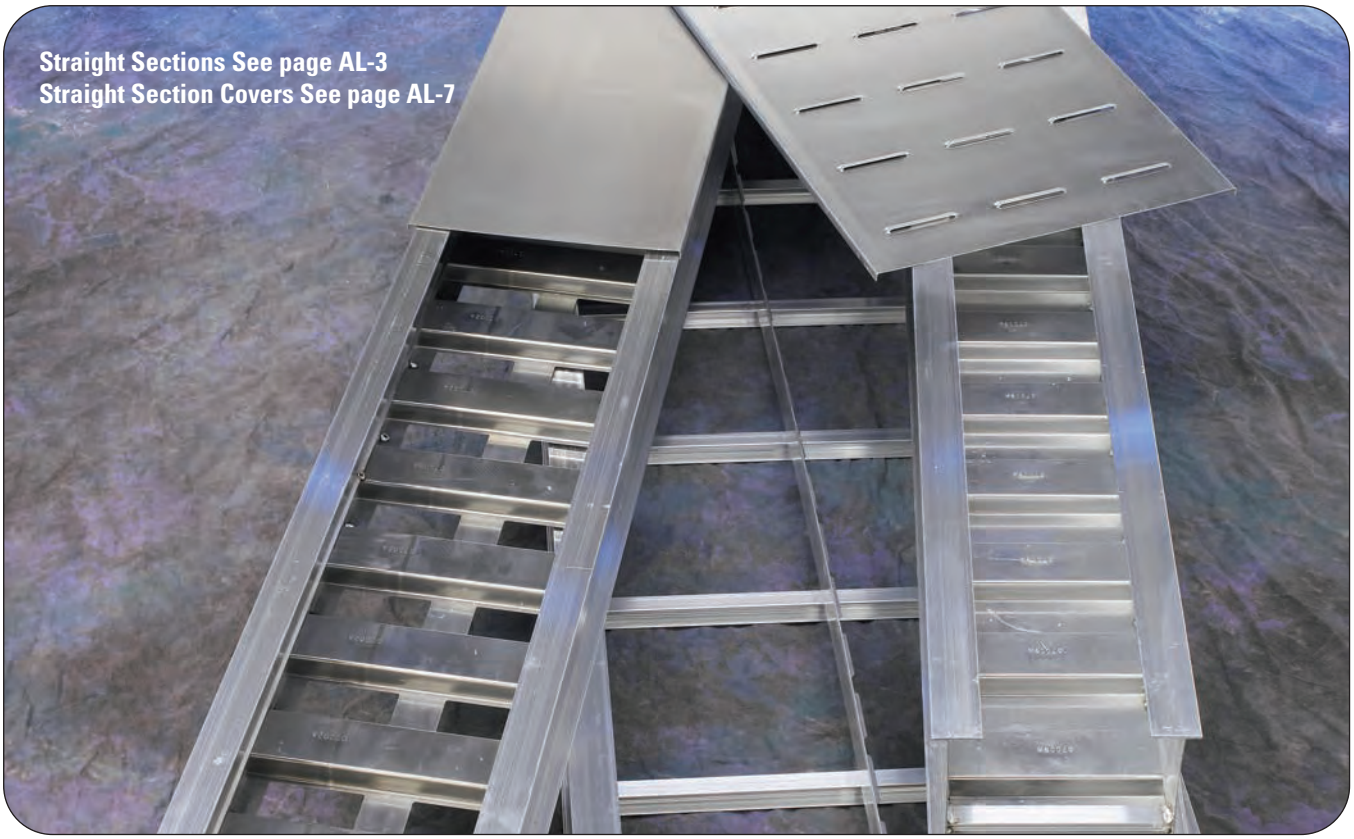

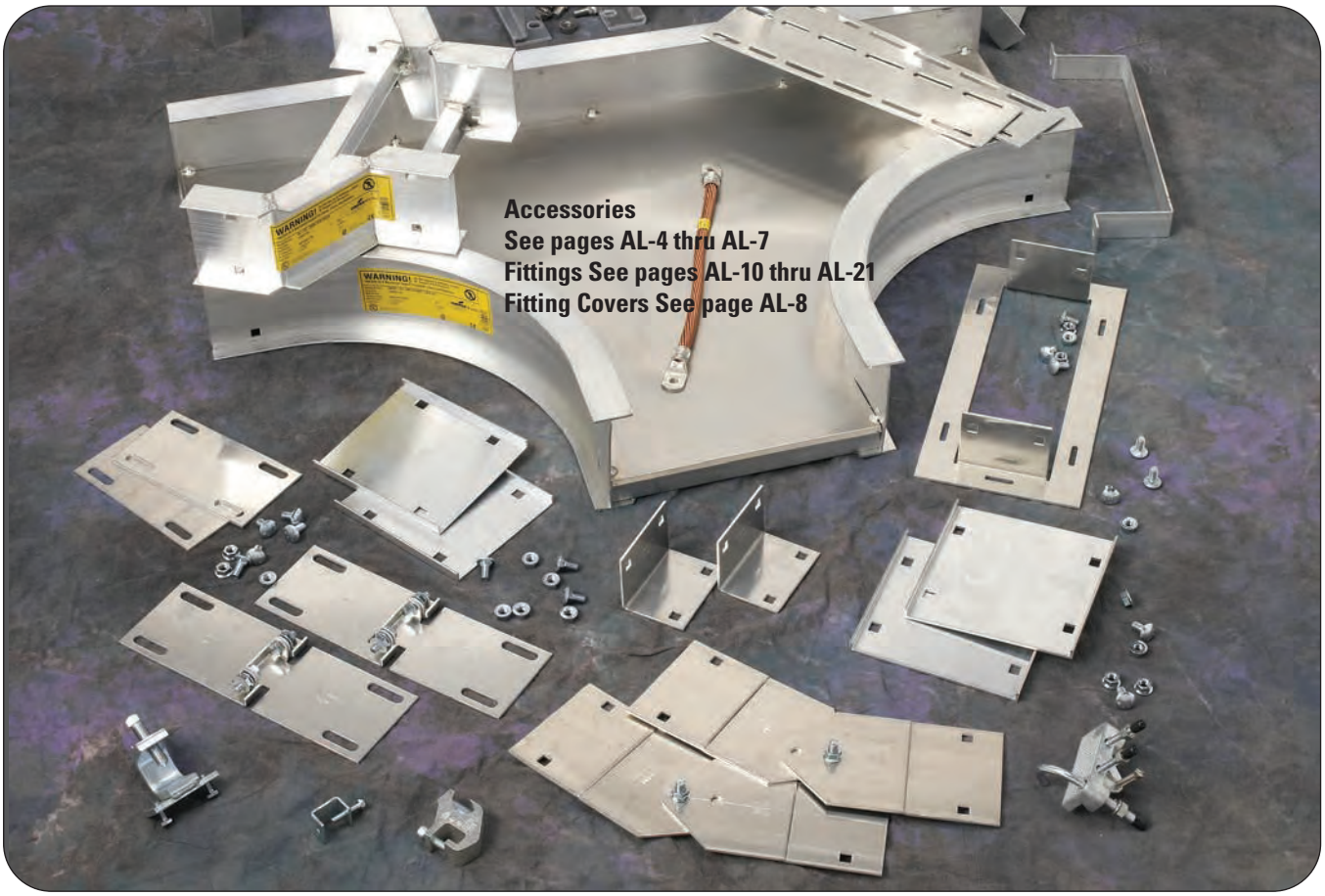

NEMA 12B Series

Side Rails

B-Line I-Beam -- the most efficient cable ladder side rail

Constructed with "Copper-free" 6063-T6 Aluminum Alloy

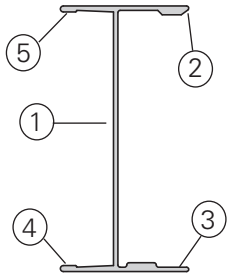

1. **I-beam side rail design**
   - maximizes material effeciency for lower weight
2. **Engineered design: Optimizes load capacity**
3. **Bottom flange inside**
   - positive rung support
4. **Bottom flange outside**
   - lower flange for hold down clamps and expansion guides
5. **Top flange outside**
   - Upper flange for securing the ladder cover or the conduit-to-ladder adapter

Rungs

The rungs can represent 40% of your cable ladder system.

- Optimized material thickness ideal for commercial applications
- For all applications -- 200 lb. concentrated loads

Splices

Unique flex-mount adjustable splice plates:

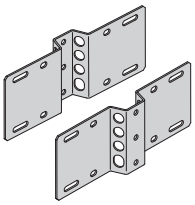

- UL Classified
- Horizontally adjustable up to 90°
- Vertically adjustable up to 15°

Time Saving Accessories

B-Line Clamp/Guide:

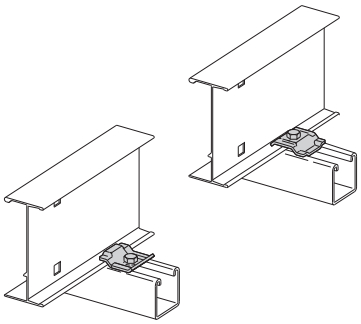

- No-twist design
- Four times the strength of traditional design
- Interchangable between clamp and guide
- Patent # RE35479

Aluminum

RWI04A, RWI05A, RWI06A, and RWI07A Straight Sections

Straight Section Part Numbering

Prefix | Suffix

Example: **RWI 04 A 09 SL - 12 - 120**

Series
RWI

Height
04 = 4″
05 = 5″
06 = 6″
07 = 7″

Material
A = Aluminum

Bottom Type
06 = 6″ Rung Spacing
09 = 9″ Rung Spacing
12 = 12″ Rung Spacing

Construction
SL = Straight Ladder Section

Width
06 = 6″
09 = 9″
12 = 12″
18 = 18″
24 = 24″
30 = 30″
36 = 36″

Length
144 = 12 ft. (3.66m)
120 = 10 ft. (3.00m)

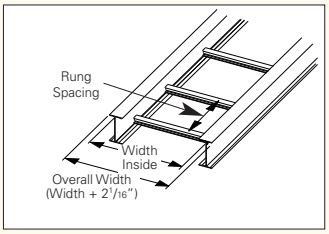

Values are based on simple beam tests per VE-1 on 36″ wide cable ladder with rungs spaced on 12″ centers. The published load safety factor is 1.5. To convert 1.5 safety factor to 2.0, multiply the published load by 0.75. To obtain mid-span deflection, multiply a load by the deflection multiplier. Cable ladder must be supported on spans shorter than or equal to the length of the tray. These systems will support without collapse a 200 lb. concentrated load.

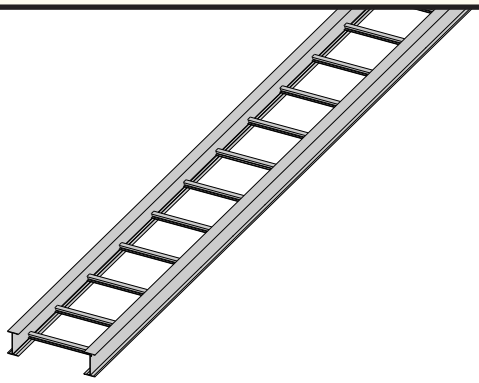

B-Line Series & Side Rail Dimensions		NEMA, CSA & UL Classifications	Span ft	Span meters	Load lbs/ft	Load kg/m	Deflection Multiplier		Design Factors for Two Rails	
RWI04A	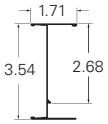	NEMA: 12B	6	1.8	224	333	0.0015	0.025	Area = 0.93 in²	Area = 5.99 cm²
		UL Cross-Sectional	10	3.0	108	161	0.0115	0.196	Sx = 1.96 in³	Sx = 81.70 cm³
		Area: 0.40 in²	12	3.7	75	112	0.0238	0.406	Ix = 1.11 in⁴	Ix = 18.10 cm⁴
RWI05A	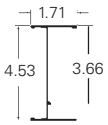	NEMA: 12B	6	1.8	224	333	0.0008	0.014	Area = 1.08 in²	Area = 6.95 cm²
		UL Cross-Sectional	10	3.0	119	178	0.0064	0.109	Sx = 3.53 in³	Sx = 147.00 cm³
		Area: 0.60 in²	12	3.7	83	123	0.0132	0.225	Ix = 1.55 in⁴	Ix = 25.40 cm⁴
RWI06A	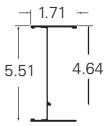	NEMA: 12B	6	1.8	224	333	0.0005	0.009	Area = 1.18 in²	Area = 7.59 cm²
		UL Cross-Sectional	10	3.0	118	175	0.0041	0.070	Sx = 5.51 in³	Sx = 230.00 cm³
		Area: 0.60 in²	12	3.7	82	121	0.0085	0.144	Ix = 1.98 in⁴	Ix = 32.50 cm⁴
RWI07A	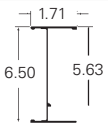	NEMA: 12C	6	1.8	224	333	0.0003	0.006	Area = 1.50 in²	Area = 9.68 cm²
		UL Cross-Sectional	10	3.0	176	262	0.0026	0.044	Sx = 8.79 in³	Sx = 366.00 cm³
		Area: 0.60 in²	12	3.7	122	182	0.0053	0.091	Ix = 2.69 in⁴	Ix = 44.10 cm⁴

Accessories

Standard Splice Plates

- Furnished in pairs with 1/4" hardware.
- UL Classified.
- One pair including hardware provided with each straight section.

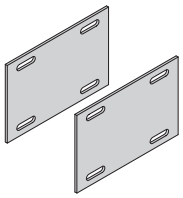

Ladder Series	Catalog No.
RWI04A	**R4A-SSP**
RWI05A	**R5A-SSP**
RWI06A	**R6A-SSP**
RWI07A	**R7A-SSP**

Offset Reducing Splice Plates

- Furnished in pairs with 1/4" hardware.
- UL Classified.

Specify the following:

† C = center reducer S = side reducer

r (ladder reduction) 3", 6", 9", 12", 15", 18", 21", 24", 27" or 30"

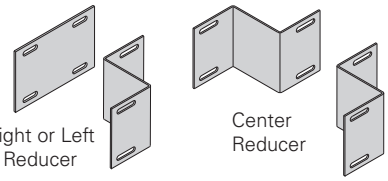

Ladder Series	Catalog No.
RWI04A	**R4A-RSP-†r**
RWI05A	**R5A-RSP-†r**
RWI06A	**R6A-RSP-†r**
RWI07A	**R7A-RSP -†r**

Flex-Mount Adjustable Splice Plates

- Furnished in pairs with 1/4" hardware.
- Horizontally adjustable to 90°.
- Vertically adjustable to 15°.
- UL Classified.

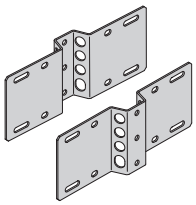

Ladder Series	Catalog No.
RWI04A	**R4A-FSP**
RWI05A	**R5A-FSP**
RWI06A	**R6A-FSP**
RWI07A	**R7A-FSP**

Requires supports within 24" on both sides, per NEMA VE 2.

Step Down Splice Plates

- Furnished in pairs with 1/4" hardware.
- UL Classified.

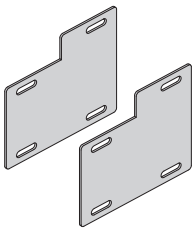

Ladder Series	Catalog No.
RWI05A to RWI04A	**RAA-DSP-45**
RWI06A to RWI04A	**RAA-DSP-46**
RWI07A to RWI04A	**RAA-DSP-47**
RWI06A to RWI05A	**RAA-DSP-56**
RWI07A to RWI05A	**RAA-DSP-57**
RWI07A to RWI06A	**RAA-DSP-67**

Tray To Box Splice Plates

- Furnished in pairs with 1/4" hardware.
- UL Classified.

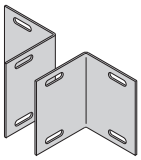

Ladder Series	Catalog No.
RWI04A	**R4A-TTB**
RWI05A	**R5A-TTB**
RWI06A	**R6A-TTB**
RWI07A	**R7A-TTB**

Vertical Adjustable Splice Plates

- Furnished in pairs with 1/4" hardware.
- UL Classified.

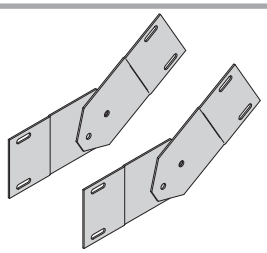

Ladder Series	Catalog No.
RWI04A	**R4A-VSP**
RWI05A	**R5A-VSP**
RWI06A	**R6A-VSP**
RWI07A	**R7A-VSP**

Requires supports within 24" on both sides, per NEMA VE 2.

Expansion Splice Plates

- Furnished in pairs with 1/4" hardware.
- Bonding jumper required.

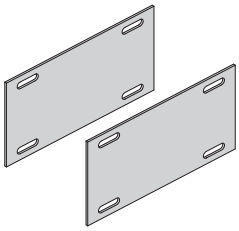

Ladder Series	Catalog No.
RWI04A	**R4A-ESP**
RWI05A	**R5A-ESP**
RWI06A	**R6A-ESP**
RWI07A	**R7A-ESP**

Accessories

Bonding Jumper

- Furnished with 1/4" hardware.
- UL Classified.

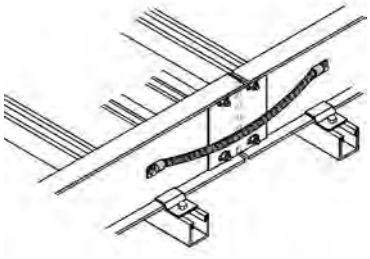

Ampacity	Catalog No.
1200	**99-30**

Clamp/Guide

- Features a no-twist design.
- Has four times the strength of the traditional design.
- Each side is labeled to ensure proper installation.
- Designed for 1/4" hardware.
- Furnished in pairs with or without hardware.

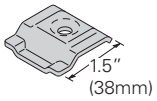

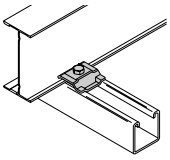

Patent No. RE35479

Catalog No.
9ZN-1204 (without hardware)
9ZN-1204NB (with hardware)

Conduit to Ladder Adaptors

- For easy attachment of conduit terminating at a cable ladder.
- Use on aluminum cable ladders.

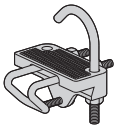

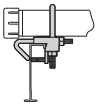

Catalog No.	Conduit Size in.	Conduit Size mm
9G-1158-1/2, 3/4	1/2, 3/4	15, 20
9G-1158-1, 1 1/4	1, 1 1/4	25, 32
9G-1158-1 1/2, 2	1 1/2, 2	40, 50
9G-1158-2 1/2, 3	2 1/2, 3	65, 80
9G-1158-3 1/2, 4	3 1/2, 4	90, 100

Ladder Drop-Out

- Specially-designed Ladder Drop-Outs provide a rounded surface with 4" (101 mm) radius to protect cable as it exits from the cable tray, preventing damage to insulation. The drop-out will attach to any desired rung.
- (†) Insert tray width

Catalog No.
9A-1103-†

† = ladder width

Blind End

- Furnished as one plate with 1/4" hardware.

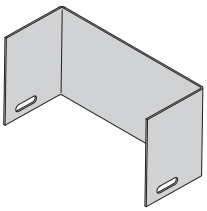

Ladder Series	Catalog No.
RWI04A	**R4A-END-†**
RWI05A	**R5A-END-†**
RWI06A	**R6A-END-†**
RWI07A	**R7A-END-†**

† = ladder width

Frame Type Box Connector

- Furnished with 1/4" hardware for tray connection.

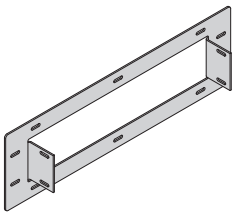

Ladder Series	Catalog No.
RWI04A	**R4A-FTB-†**
RWI05A	**R5A-FTB-†**
RWI06A	**R6A-FTB-†**
RWI07A	**R7A-FTB-†**

† = ladder width

Accessories

Trapeze Support Kit

- Single Trapeze Support in one package is available in pre-galvanized steel with zinc-plated hardware or hot dip galvanized steel with 316 stainless steel hardware.
- SH Channel provides pre-punched slots eliminating field drilling.
- Hardware is sealed in plastic bag and boxed with channel that is pre-cut to appropriate length.
- Designed for use with 1/2" threaded rod. Order rod separately.

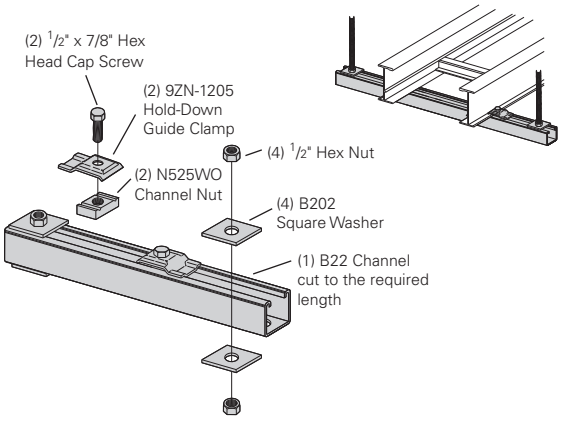

Catalog No.	Ladder Width in.	Ladder Width mm	Channel Length in.	Channel Length mm	Uniform Load lbs	Uniform Load kN
9P-5506-22SH(†)	6	152	16	406	1600	7.11
9P-5509-22SH(†)	9	229	18	457	1250	5.56
9P-5512-22SH(†)	12	305	22	559	1125	5.00
9P-5518-22SH(†)	18	457	28	711	865	3.85
9P-5524-22SH(†)	24	610	34	864	700	3.11
9P-5530-22SH(†)	30	762	40	1016	590	2.62
9P-5536-22SH(†)	36	914	46	1168	510	2.27
9P-5542-22SH(†)	42	1067	52	1321	450	2.00

- (†) Insert 3/8 for 3/8" threaded rod hardware.

Safety factor of 3.0 on all loads.

Straight Section Barrier Strip

- Furnished with four (4) barrier strip clips, mounting hardware and splice.
- Standard lengths are 144" (12 ft) & 120" (10 ft).

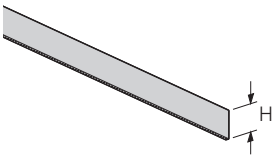

Ladder Series	Catalog No.	H in	H mm
RWI04A	**R4A-DSL-Length**	3	76
RWI05A	**R5A-DSL-Length**	4	101
RWI06A	**R6A-DSL-Length**	5	127
RWI07A	**R7A-DSL-Length**	6	152

Horizontal Bend Barrier Strip

- Horizontal Bend Barriers are flexible in order to conform to any horizontal fitting radius.
- Furnished with three (3) barrier strip clips, mounting hardware and splice.
- Standard length is 72" (6 ft).

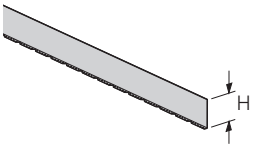

Ladder Series	Catalog No.	H in	H mm
RWI04A	**R4A-DHB**	3	76
RWI05A	**R5A-DHB**	4	101
RWI06A	**R6A-DHB**	5	127
RWI07A	**R7A-DHB**	6	152

Vertical Bend Barrier Strip

- Furnished with three (3) barrier strip clips, mounting hardware and splice.

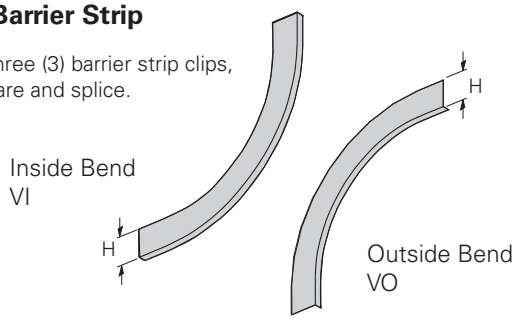

Ladder Series	Catalog No. Inside Bend	Catalog No. Outside Bend	H in	H mm
RWI04A	**R4A-DVI-(**)R(†)**	**R4A-DVO-(**)R(†)**	3	76
RWI05A	**R5A-DVI-(**)R(†)**	**R6A-DVO-(**)R(†)**	4	101
RWI06A	**R6A-DVI-(**)R(†)**	**R6A-DVO-(**)R(†)**	5	127
RWI07A	**R7A-DVI-(**)R(†)**	**R7A-DVO-(**)R(†)**	6	152

Inside Bend
(**) Insert 30°, 45°, 60°, or 90° for angles
(†) Insert 12, 24, or 36 for radius

Aluminum

Straight Section Covers & Accessories

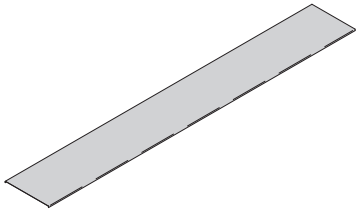

NEMA 12B Aluminum Cover Part Numbering

Prefix | Suffix

Example: **86 7 A 40 SL - 12 - 72**

Cover Type	Detail	Material	Material Thickness	Cover Style	Ladder Width	Length
86 = Solid **87** = Vented	**7** = Flanged	Aluminum	**40** = .040″	**SL** = Straight Ladder Section	**06** = 6″ **09** = 9″ **12** = 12″ **18** = 18″ **24** = 24″ **30** = 30″ **36** = 36″	**60** = 60" (1.5m) **72** = 72" (1.83m) **120** = 120" (3.0m) **144** = 144" (3.66m)

Standard Cover Clamp

- Setscrew included.
- For indoor service only.
- Sold each.

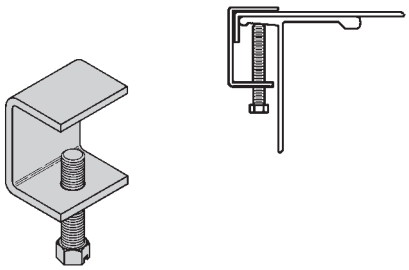

Ladder Type	Side Rail Height	Catalog No.
Aluminium	All Sizes	**9ZN-9012**
		9A-9012

Heavy Duty Cover Clamp

- For heavy duty application.
- Sold per piece.

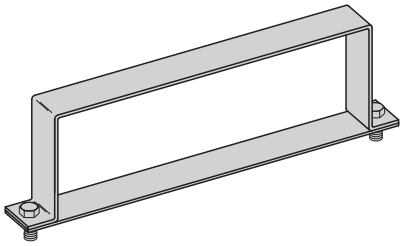

Ladder Series	Catalog No.
RWI04A	**R4A-HDCC-†**
RWI05A	**R5A-HDCC-†**
RWI06A	**R6A-HDCC-†**
RWI07A	**R7A-HDCC-†**

† = tray width

Fitting Covers

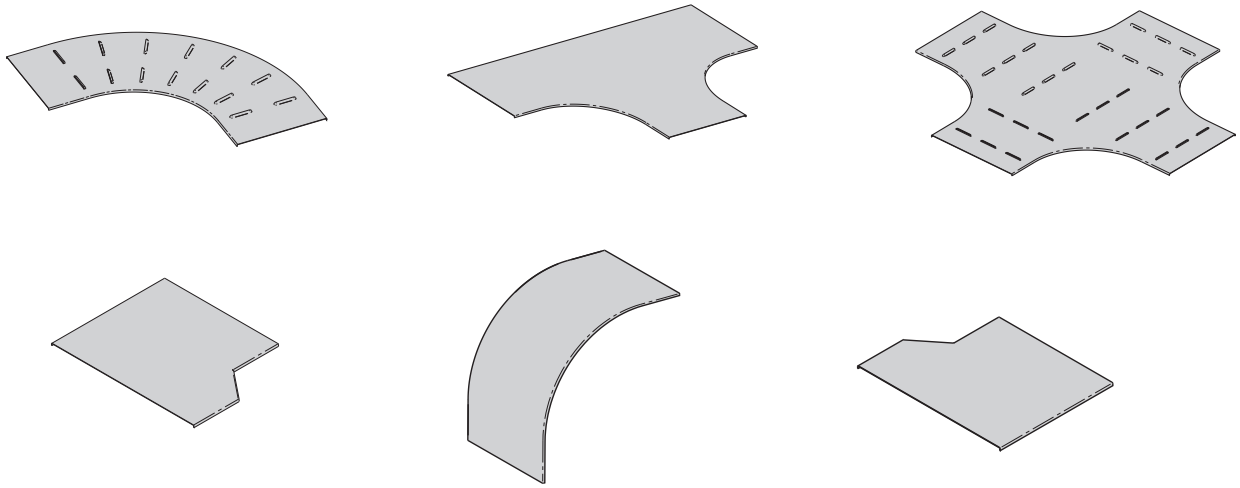

NEMA 12B Aluminum Fitting Cover Part Numbering

Prefix — Suffix

Example: **86 7 A 40 - 06 - 90 HB 12**

Cover Type
86 = Solid
87 = Vented

Detail
7 = Flange

Material
A = Aluminum

Material Thickness
40 = .040 Aluminum

HB **Insert HB Suffix from pages AL-11 & AL-12**
HT **Insert HT Suffix from page AL-13**
HX **Insert HX Suffix from page AL-13**
RT **Insert RT Suffix from page AL-14**
ET **Insert ET Suffix from page AL-15**
RX **Insert RX Suffix from page AL-16**
VI **Insert VI Suffix from pages AL-17 – AL-20**
VO **Insert VO Suffix from pages AL-17 – AL-20 & Side Rail Height**
VTD **Insert VTD Suffix from page AL-21 & Side Rail Height**
VTU **Insert VTU Suffix from page AL-21**

Specifications - NEMA 12B Aluminium Cable Ladder

Part 1 - General

1.01 Section Includes

A. The work covered under this section consists of the furnishing of all necessary labor, supervision, materials, equipment, tests and services to install complete cable ladder systems as shown on the drawings.

B. Cable ladder systems are defined to include, but are not limited to straight sections of [ladder type] cable ladders, bends, tees, elbows, drop-outs, supports and accessories.

1.02 References

A. ANSI/NFPA 70 - National Electrical Code

B. NEMA VE 1-2009 - Metallic Cable Ladder Systems

C. NEMA VE 2-2006 - Cable Ladder installation Guidelines

1.03 Drawings

A. The drawings, which constitute a part of these specifications, indicate the general route of the cable ladder systems. Data presented on these drawings are as accurate as preliminary surveys and planning can determine until final equipment selection is made. Accuracy is not guaranteed and field verification of all dimensions, routing, etc., is directed.

B. Specifications and drawings are for assistance and guidance, but exact routing, locations, distances and levels will be governed by actual field conditions. Contractor is directed to make field surveys as part of his work prior to submitting system layout drawings.

1.04 Submittals

A. Submittal Drawings: Submit drawings of cable ladder and accessories including clamps, brackets, hanger rods, splice plate connectors, expansion joint assemblies, and fittings, showing accurately scaled components.

B. Product Data: Submit manufacturer's data on cable ladder including, but not limited to, types, materials, finishes, rung spacings, inside depths and fitting radii. For side rails and rungs, submit cross sectional properties including Section Modulus (Sx) and Moment of Inertia (Ix).

1.05 Quality Assurance

A. Manufacturers: Firms regularly engaged in manufacture of cable ladders and fittings of types and capacities required, whose products have been in satisfactory use in similar service for not less than 5 years.

B. NEMA Compliance: Comply with NEMA Standards Publication Number VE 1, "Cable Ladder Systems".

C. NEC Compliance: Comply with NEC, as applicable to construction and installation of cable ladder (Article 392, NEC).

D. UL Compliance: Provide products that are UL-classified and labeled.

E. NFPA Compliance: Comply with NFPA 70B, "Recommended Practice for Electrical Equipment Maintenance" pertaining to installation of cable ladder systems.

1.06 Delivery, Storage and Handling

A. Deliver cable ladder systems and components carefully to avoid breakage, denting and scoring finishes. Do not install damaged equipment.

B. Store cable ladders and accessories in original cartons and in clean dry space; protect from weather and construction traffic. Wet materials should be unpacked and dried before storage.

Part 2 - Products

2.01 Acceptable Manufacturers

A. Subject to compliance with these specifications, cable ladder systems shall be as manufactured by Eaton's B-Line Business.

2.02 Cable Ladder Sections and Components

A. General: Except as otherwise indicated, provide metal cable ladders, of types, classes, and sizes indicated; with splice plates, bolts, nuts and washers or connecting units. Construct units with rounded edges and smooth surfaces; in compliance with applicable standards; and with the following additional construction features. Cable ladder shall be installed according to the latest revision of NEMA VE-2.

B. Material and Finish: Straight sections, fitting side rails, rungs and splice plates shall be extruded from Aluminium Association Alloy 6063. All fabricated parts shall be made from Aluminium Association Alloy 5052.

2.03 Type of Ladder System

A. Ladder Cable ladders shall consist of two longitudinal members (side rails) with transverse members (rungs) mechanically fastened to the side rails. Rungs shall be spaced [6] [9] [12] inches on center. Rung spacing in radiused fittings shall be industry standard 9" and measured at the center of the ladder's width. Each rung must be capable of supporting 1 200 lb. concentrated load at the center of a 18" wide cable ladder with a safety factor of 1.5.

B. Cable Ladder loading depth shall be [3] [4] [5] [6] inches per NEMA VE-1.

C. Straight sections shall be supplied in standard [10 foot (3.05m)] [12 foot (3.65m)] lengths.

D. Cable Ladder widths shall be [6] [9] [12] [18] [24] [30] [36] inches or as shown on drawings.

E. Splice plates shall have (4) four nuts and bolts per plate. The resistance of fixed splice connections between adjacent sections of ladder shall not exceed 0.00033 ohms. Splice plates shall be furnished with straight sections and fittings.

F. All fittings must have a minimum radius of [12] [24] [36] inches.

2.04 Loading Capacities

A. Cable ladders shall meet NEMA class designation: [75 lbs./ft. on 12 ft. span].
OR

A. Cable ladder shall be capable of carrying a uniformly distributed load of _____ lbs./ft on a _____ foot support span with a safety factor of 1.5 when supported as a simple span and tested per NEMA VE 1 Section 5.2.

Part 3 - Execution

3.01 Installation

A. Install cable ladders as indicated: Installation shall be in accordance with equipment manufacturer's instructions, and with recognized industry practices to ensure that cable ladder equipment comply with requirements of NEC and applicable portions of NFPA 70B. Reference NEMA VE-2 for general cable ladder installation guidelines.

B. Coordinate cable ladder with other electrical work as necessary to properly integrate installation of cable ladder work with other work.

C. Provide sufficient space encompassing cable ladders to permit access for installing and maintaining cables.

D. Cable ladder fitting supports shall be located such that they meet the strength requirements of straight sections. Install fitting supports per NEMA VE-2 guidelines, or in accordance with manufacturer's instructions.

3.02 Testing

A. Test cable ladders to ensure electrical continuity of bonding and grounding connections, and to demonstrate compliance with specified maximum grounding resistance. See NFPA 70B, Chapter 18, for testing and test methods.

B. Manufacturer shall provide test reports witnessed by an independent testing laboratory of the "worst case" loading conditions outlined in this specification and performed in accordance with the latest revision of NEMA VE-1-2002/CSA C22.2 No. 126.1-02.

End Of Section.

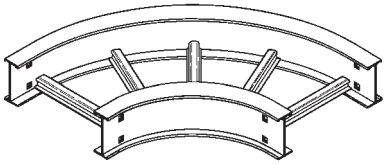

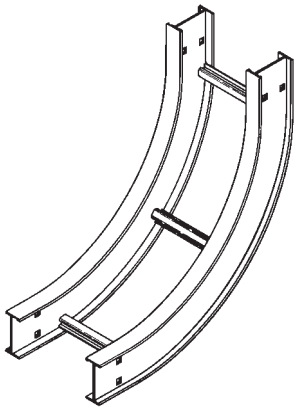

Fittings engineered with 3" tangents for splicing integrity.

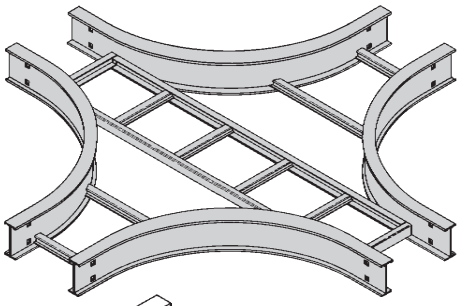

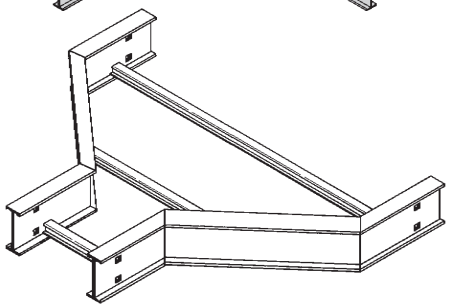

Fittings Part Numbering

Prefix — Suffix

Example: **RWI 04 A09 HB - 09 - 30 R24**

Series	Height	Material	Type	Width	Angle	Radius
RWI	**4** = 4" (101) **5** = 5" (127) **6** = 6" (152) **7** = 7" (178)	Aluminum 9" Rung Spacing	**HB** = Horizontal Bend * **HT** = Horizontal Tee * **HX** = Horizontal Cross **VI** = Vertical Inside Bend **VO** = Vertical Outside Bend * **VTD** = Vertical Tee, Down * **VTU** = Vertical Tee, Up	**06** = 6" (152) **09** = 9" (228) **12** = 12" (305) **18** = 18" (457) **24** = 24" (609) **30** = 30" (762) **36** = 36" (914)	**30** = 30° **45** = 45° **60** = 60° **90** = 90°	**R12** = 12" (305) **R24** = 24" (609) **R36** = 36" (914)

* Angle not required in part number

Horizontal Reducing / Expanding Tee or Cross Fittings Part Numbering

Prefix — Suffix

Example: **RWI 04 A09 ET - 09 - 30 R12**

Series	Height	Material	Type	Width[1]	Width[2]	Radius
RWI	**4** = 4" (101) **5** = 5" (127) **6** = 6" (152) **7** = 7" (178)	Aluminum 9" Rung Spacing	**ET** = Expanding Tee **RT** = Reducing Tee **RX** = Expanding/Reducing Cross	**06** = 6" (152) **09** = 9" (228) **12** = 12" (305) **18** = 18" (457) **24** = 24" (609) **30** = 30" (762) **36** = 36" (914)	**06** = 6" (152) **09** = 9" (228) **12** = 12" (305) **18** = 18" (457) **24** = 24" (609) **30** = 30" (762) **36** = 36" (914)	**R12** = 12" (305) **R24** = 24" (609) **R36** = 36" (914)

Horizontal Bend 90° 60° (HB)

1 pair splice plates with hardware included.

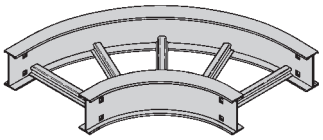

90˚ Horizontal Bend

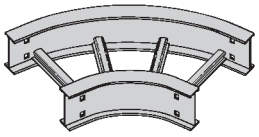

60˚ Horizontal Bend

Bottoms manufactured:

09 = 9" Rung Spacing

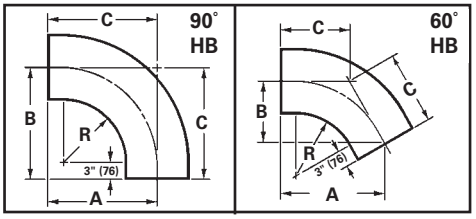

Bend Radius R		Ladder Width		90˚ Horizontal Bend Dimensions							60˚ Horizontal Bend Dimensions						
				Catalog No.	A		B		C		Catalog No.	A		B		C	
in.	mm	in.	mm		in.	mm	in.	mm	in.	mm		in.	mm	in.	mm	in.	mm
		6	152	**(Pre)HB-06-90R12**	18 1/16	459	18 1/16	459	18 1/16	459	**(Pre)HB-06-60R12**	17 9/16	445	10 1/8	258	11 11/16	297
		9	228	**(Pre)HB-09-90R12**	19 9/16	497	19 9/16	497	19 9/16	497	**(Pre)HB-09-60R12**	18 13/16	478	10 7/8	277	12 9/16	319
		12	305	**(Pre)HB-12-90R12**	21 1/16	535	21 1/16	535	21 1/16	535	**(Pre)HB-12-60R12**	20 1/8	511	11 5/8	296	13 7/16	341
12	305	18	457	**(Pre)HB-18-90R12**	24 1/16	611	24 1/16	611	24 1/16	611	**(Pre)HB-18-60R12**	22 3/4	577	13 1/8	334	15 3/16	385
		24	609	**(Pre)HB-24-90R12**	27 1/16	687	27 1/16	687	27 1/16	687	**(Pre)HB-24-60R12**	25 5/16	643	14 5/8	372	16 7/8	429
		30	762	**(Pre)HB-30-90R12**	30 1/16	763	30 1/16	763	30 1/16	763	**(Pre)HB-30-60R12**	27 15/16	709	16 1/8	410	18 5/8	473
		36	914	**(Pre)HB-36-90R12**	33 1/16	840	33 1/16	840	33 1/16	840	**(Pre)HB-36-60R12**	30 1/2	775	17 5/8	448	20 3/8	517
		6	152	**(Pre)HB-06-90R24**	30 1/16	763	30 1/16	763	30 1/16	763	**(Pre)HB-06-60R24**	27 15/16	709	16 1/8	410	18 5/8	473
		9	228	**(Pre)HB-09-90R24**	31 9/16	802	31 9/16	802	31 9/16	802	**(Pre)HB-09-60R24**	29 1/4	742	16 7/8	429	19 1/2	495
		12	305	**(Pre)HB-12-90R24**	33 1/16	840	33 1/16	840	33 1/16	840	**(Pre)HB-12-60R24**	30 1/2	775	17 5/8	448	20 3/8	517
24	610	18	457	**(Pre)HB-18-90R24**	36 1/16	916	36 1/16	916	36 1/16	916	**(Pre)HB-18-60R24**	33 1/8	841	19 1/8	486	22 1/8	561
		24	609	**(Pre)HB-24-90R24**	39 1/16	992	39 1/16	992	39 1/16	992	**(Pre)HB-24-60R24**	35 3/4	907	20 5/8	524	23 13/16	605
		30	762	**(Pre)HB-30-90R24**	42 1/16	1068	42 1/16	1068	42 1/16	1068	**(Pre)HB-30-60R24**	38 5/16	973	22 1/8	564	25 9/16	649
		36	914	**(Pre)HB-36-90R24**	45 1/16	1144	45 1/16	1144	45 1/16	1144	**(Pre)HB-36-60R24**	40 15/16	1039	23 5/8	600	27 15/16	693
		6	152	**(Pre)HB-06-90R36**	42 1/16	1068	42 1/16	1068	42 1/16	1068	**(Pre)HB-06-60R36**	38 3/8	975	22 1/8	562	25 9/16	649
		9	228	**(Pre)HB-09-90R36**	43 9/16	1107	43 9/16	1107	43 9/16	1107	**(Pre)HB-09-60R36**	39 5/8	1006	22 7/8	581	26 7/16	672
		12	305	**(Pre)HB-12-90R36**	45 1/16	1145	45 1/16	1145	45 1/16	1145	**(Pre)HB-12-60R36**	41	1041	23 5/8	600	27 5/16	694
36	915	18	457	**(Pre)HB-18-90R36**	48 1/16	1221	48 1/16	1221	48 1/16	1221	**(Pre)HB-18-60R36**	43 1/2	1105	25 1/16	637	29	737
		24	609	**(Pre)HB-24-90R36**	51 1/16	1297	51 1/16	1297	51 1/16	1297	**(Pre)HB-24-60R36**	46 1/8	1172	26 5/8	676	30 3/4	781
		30	762	**(Pre)HB-30-90R36**	54 1/16	1373	54 1/16	1373	54 1/16	1373	**(Pre)HB-30-60R36**	48 3/4	1238	28 1/16	713	32 1/2	826
		36	914	**(Pre)HB-36-90R36**	57 1/16	1449	57 1/16	1449	57 1/16	1449	**(Pre)HB-36-60R36**	51 5/16	13023	29 9/16	751	34 1/4	870

(Pre) See page AL-10 for catalog number prefix.
Width dimensions are to inside wall.
Manufacturing tolerances apply to all dimensions.

Horizontal Bend 45° 30° (HB)

1 pair splice plates with hardware included.

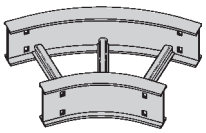

45˚ Horizontal Bend

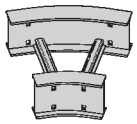

30˚ Horizontal Bend

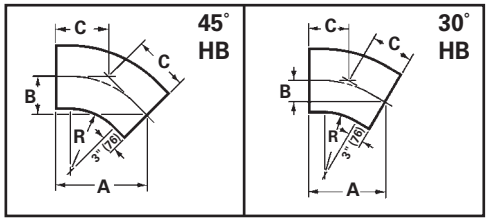

Bottoms manufactured:

09 = 9" Rung Spacing

Bend Radius R		Ladder Width		60˚ Horizontal Bend Dimensions								30˚ Horizontal Bend Dimensions							
				Catalog No.	A		B		C			Catalog No.	A		B		C		
in.	mm	in.	mm		in.	mm	in.	mm	in.	mm			in.	mm	in.	mm	in.	mm	
		6	152	(Pre)HB-06-45R12	15 3/4	400	6 1/2	165	9 3/16	233		(Pre)HB-06-30R12	13 3/16	338	3 9/16	90	7 1/16	180	
		9	228	(Pre)HB-09-4R12	16 13/16	427	6 15/16	176	9 13/16	249		(Pre)HB-09-30R12	13 15/16	354	3 3/4	95	7 7/2	190	
		12	305	(Pre)HB-12-45R12	17 7/8	454	7 7/16	189	10 1/2	267		(Pre)HB-12-30R12	14 11/16	373	3 15/16	100	7 7/8	200	
12	305	18	457	(Pre)HB-18-45R12	20 1/2	521	8 5/16	211	11 3/4	298		(Pre)HB-18-30R12	16 3/16	411	4 9/16	110	8 11/16	220	
		24	609	(Pre)HB-24-45R12	22 1/16	560	9 3/16	233	12 15/16	328		(Pre)HB-24-30R12	17 11/16	449	4 3/4	120	9 1/2	241	
		30	762	(Pre)HB-30-45R12	24 5/16	617	10 1/16	255	14 1/4	362		(Pre)HB-30-30R12	19 3/16	487	5 1/8	131	10 5/16	261	
		36	914	(Pre)HB-36-45R12	26 7/16	671	10 15/16	278	15 7/16	392		(Pre)HB-36-30R12	20 11/16	525	5 9/16	141	11 1/16	282	
		6	152	(Pre)HB-06-45R24	24 5/16	617	10 1/16	255	14 3/16	360		(Pre)HB-06-30R24	19 3/16	487	5 1/8	131	10 5/16	261	
		9	228	(Pre)HB-09-45R24	25 1/4	641	10 1/2	267	14 13/16	376		(Pre)HB-09-30R24	19 15/16	506	5 5/16	136	10 11/16	271	
		12	305	(Pre)HB-12-45R24	26 7/16	672	10 15/16	278	15 7/16	392		(Pre)HB-12-30R24	20 11/16	525	5 9/16	141	11 1/16	282	
24	610	18	457	(Pre)HB-18-45R24	28 9/16	725	11 13/16	300	16 11/16	424		(Pre)HB-18-30R24	22 3/16	563	5 15/16	151	11 7/8	302	
		24	609	(Pre)HB-24-45R24	30 11/16	779	12 11/16	322	17 15/16	456		(Pre)HB-24-30R24	23 11/16	601	6 3/8	161	12 11/16	322	
		30	762	(Pre)HB-30-45R24	32 13/16	833	13 9/16	345	19 3/16	487		(Pre)HB-30-30R24	25 3/16	640	6 3/4	171	13 1/2	343	
		36	914	(Pre)HB-36-45R24	34 15/16	887	14 7/16	367	20 7/16	519		(Pre)HB-36-30R24	26 11/16	678	7 1/8	182	14 5/16	363	
		6	152	(Pre)HB-06-45R36	32 3/4	832	13 9/16	345	19 1/4	489		(Pre)HB-06-30R36	25 3/16	640	6 3/4	171	13 1/2	343	
		9	228	(Pre)HB-09-45R36	33 13/16	859	14	356	19 13/16	503		(Pre)HB-09-30R36	25 15/16	659	7	179	13 15/16	354	
		12	305	(Pre)HB-12-45R36	34 15/16	887	14 1/2	368	20 7/16	519		(Pre)HB-12-30R36	26 11/16	678	7 1/8	181	14 5/16	364	
36	915	18	457	(Pre)HB-18-45R36	37	940	15 1/4	387	21 11/16	551		(Pre)HB-18-30R36	28 3/16	716	7 1/2	191	15 1/8	384	
		24	609	(Pre)HB-24-45R36	39 1/8	994	16 1/4	413	22 15/16	583		(Pre)HB-24-30R36	29 11/16	754	8	203	15 15/16	405	
		30	762	(Pre)HB-30-45R36	41 1/4	1048	17	432	24 3/16	614		(Pre)HB-30-30R36	31 3/16	792	8 5/16	211	16 3/4	425	
		36	914	(Pre)HB-36-45R36	43 3/8	1102	17 15/16	456	25 7/16	646		(Pre)HB-36-30R36	32 11/16	830	8 3/4	222	17 1/2	445	

(Pre) See page AL-10 for catalog number prefix.
Width dimensions are to inside wall.
Manufacturing tolerances apply to all dimensions.

NEMA 12B Aluminum Cable Ladder - Fittings

Horizontal Tee (HT)

2 pair splice plates with hardware included.

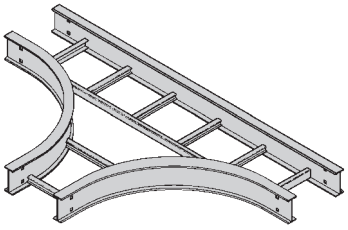

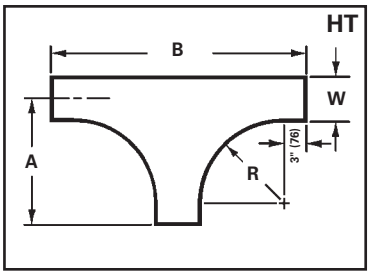

Horizontal Cross (HX)

3 pair splice plates with hardware included.

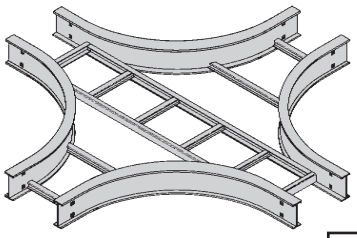

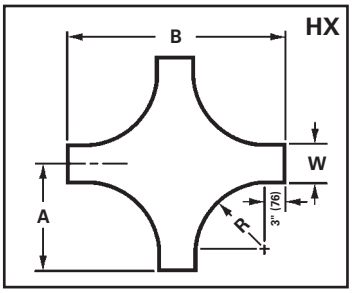

Bend Radius R in.	Bend Radius R mm	Ladder Width in.	Ladder Width mm	Horizontal Tee Catalog Number	Horizontal Tee Dimensions A in.	Horizontal Tee Dimensions A mm	Horizontal Tee Dimensions B in.	Horizontal Tee Dimensions B mm	Horizontal Cross Catalog Number	Horizontal Cross Dimensions A in.	Horizontal Cross Dimensions A mm	Horizontal Cross Dimensions B in.	Horizontal Cross Dimensions B mm
12	305	6	152	**(Prefix)HT-06-R12**	18 1/16	458	36 3/4	933	**(Prefix)HX-06-R12**	18 1/16	458	36 3/4	933
		9	229	**(Prefix)HT-09-R12**	19 9/16	497	39 7/8	1013	**(Prefix)HX-09-R12**	19 9/16	497	39 7/8	1013
		12	305	**(Prefix)HT-12-R12**	21 1/16	535	42 1/4	1073	**(Prefix)HX-12-R12**	21 1/16	535	42 1/4	1073
		18	457	**(Prefix)HT-18-R12**	24 1/16	611	48 1/2	1232	**(Prefix)HX-18-R12**	24 1/16	611	48 1/2	1232
		24	609	**(Prefix)HT-24-R12**	27 1/16	687	54 13/16	1392	**(Prefix)HX-24-R12**	27 1/16	687	54 13/16	1392
		30	762	**(Prefix)HT-30-R12**	30 1/16	763	60 1/4	1530	**(Prefix)HX-30-R12**	30 1/16	763	60 1/4	1530
		36	914	**(Prefix)HT-36-R12**	33 1/16	839	66 9/16	1691	**(Prefix)HX-36-R12**	33 1/16	839	66 9/16	1691
24	610	6	152	**(Prefix)HT-06-R24**	30 1/16	763	60 1/16	1551	**(Prefix)HX-06-R24**	30 1/16	763	60 1/16	1551
		9	229	**(Prefix)HT-09-R24**	31 9/16	801	63 1/4	1606	**(Prefix)HX-09-R24**	31 9/16	801	63 1/4	1606
		12	305	**(Prefix)HT-12-R24**	33 1/16	839	66 9/16	1691	**(Prefix)HX-12-R24**	33 1/16	839	66 9/16	1691
		18	457	**(Prefix)HT-18-R24**	36 1/16	916	72 1/16	1830	**(Prefix)HX-18-R24**	36 1/16	916	72 1/16	1830
		24	609	**(Prefix)HT-24-R24**	39 1/16	992	78 3/8	1991	**(Prefix)HX-24-R24**	39 1/16	992	78 3/8	1991
		30	762	**(Prefix)HT-30-R24**	42 1/16	1068	84 5/8	2150	**(Prefix)HX-30-R24**	42 1/16	1068	84 5/8	2150
		36	914	**(Prefix)HT-36-R24**	45 1/16	1144	90 15/16	2310	**(Prefix)HX-36-R24**	45 1/16	1144	90 15/16	2310
36	915	6	152	**(Prefix)HT-06-R36**	42 1/16	1068	84 1/16	2135	**(Prefix)HX-06-R36**	42 1/16	1068	84 1/16	2135
		9	229	**(Prefix)HT-09-R36**	43 9/16	1106	87 1/4	2216	**(Prefix)HX-09-R36**	43 9/16	1106	87 1/4	2216
		12	305	**(Prefix)HT-12-R36**	45 1/16	1144	90 9/16	2301	**(Prefix)HX-12-R36**	45 1/16	1144	90 9/16	2301
		18	457	**(Prefix)HT-28-R36**	48 1/16	1221	96 1/16	2440	**(Prefix)HX-18-R36**	48 1/16	1221	96 1/16	2440
		24	609	**(Prefix)HT-24-R36**	51 1/16	1297	102 3/8	2601	**(Prefix)HX-24-R36**	51 1/16	1297	102 3/8	2601
		30	762	**(Prefix)HT-30-R36**	54 1/16	1373	108 5/8	2760	**(Prefix)HX-30-R36**	54 1/16	1373	108 5/8	2760
		36	914	**(Prefix)HT-36-R36**	57 1/16	1449	114 15/16	2920	**(Prefix)HX-36-R36**	57 1/16	1449	114 15/16	2920

(Pre) See page AL-10 for catalog number prefix.
Width dimensions are to inside wall.
Manufacturing tolerances apply to all dimensions.

Vertical Bend 90˚ (VO, VI)

1 pair splice plates with hardware included.

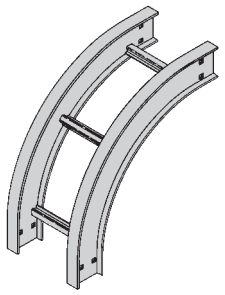

90˚ Vertical Outside

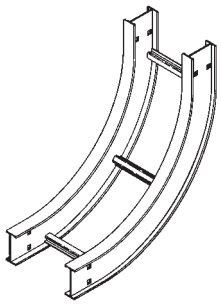

90˚ Vertical Inside

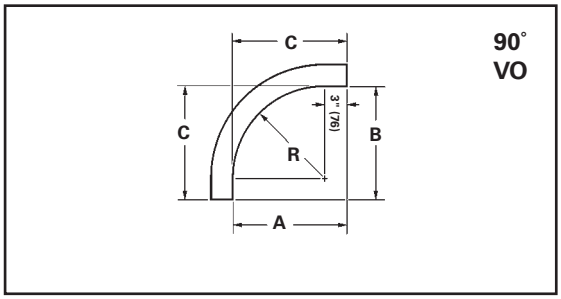

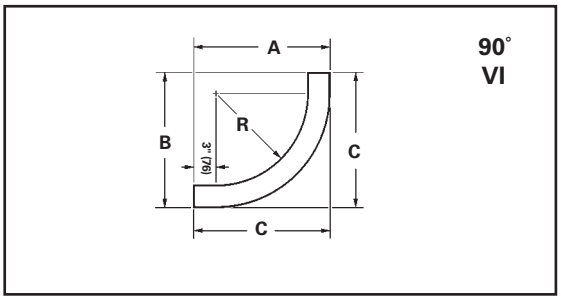

Bend Radius R	Ladder Width		(*) Insert "VO" for Vert. Outside Bend Insert "VI" for Vert. Inside Bend	VO Side Rail Height 4" - 7"			VI Side Rail Height											
							4"			5"			6"			7"		
				A	B	C	A	B	C	A	B	C	A	B	C	A	B	C
in.	in.	mm	Catalog No.	in.	in.	in.	in.	in.	in.	in.	in.	in.	in.	in.	in.	in.	in.	in.
12 (305)	6	152	(Prefix)(*)-06-90R12	15 (381)	15 (381)	15 (381)	18 1/2 (470)	18 1/2 (470)	18 1/2 (470)	19 1/2 (495)	19 1/2 (495)	19 1/2 (495)	20 1/2 (521)	20 1/2 (521)	20 1/2 (521)	21 1/2 (546)	21 1/2 (546)	21 1/2 (546)
	9	228	(Prefix)(*)-09-90R12															
	12	305	(Prefix)(*)-12-90R12															
	18	457	(Prefix)(*)-18-90R12															
	24	609	(Prefix)(*)-24-90R12															
	30	762	(Prefix)(*)-30-90R12															
	36	914	(Prefix)(*)-36-90R12															
24 (609)	6	152	(Prefix)(*)-06-90R24	27 (686)	27 (686)	27 (686)	31 1/2 (775)	31 1/2 (775)	31 1/2 (775)	31 1/2 (800)	31 1/2 (800)	31 1/2 (800)	32 1/2 (825)	32 1/2 (825)	32 1/2 (825)	33 1/2 (851)	33 1/2 (851)	33 1/2 (851)
	9	228	(Prefix)(*)-09-90R24															
	12	305	(Prefix)(*)-12-90R24															
	18	457	(Prefix)(*)-18-90R24															
	24	609	(Prefix)(*)-24-90R24															
	30	762	(Prefix)(*)-30-90R24															
	36	914	(Prefix)(*)-36-90R24															
36 (914)	6	152	(Prefix)(*)-06-90R36	39 (991)	39 (991)	39 (991)	42 1/2 (1080)	42 1/2 (1080)	42 1/2 (1080)	43 1/2 (1105)	43 1/2 (1105)	43 1/2 (1105)	44 1/2 (1130)	44 1/2 (1130)	44 1/2 (1130)	45 1/2 (1156)	45 1/2 (1156)	45 1/2 (1156)
	9	228	(Prefix)(*)-09-90R36															
	12	305	(Prefix)(*)-12-90R36															
	18	457	(Prefix)(*)-18-90R36															
	24	609	(Prefix)(*)-24-90R36															
	30	762	(Prefix)(*)-30-90R36															
	36	914	(Prefix)(*)-36-90R36															

(Pre) See page AL-10 for catalog number prefix.
Width dimensions are to inside wall.
Manufacturing tolerances apply to all dimensions.

Vertical Bend 60˚ (VO, VI)

1 pair splice plates with hardware included.

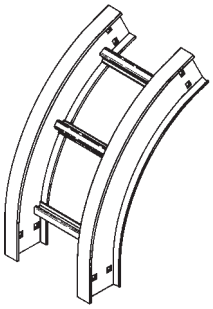

60˚ Vertical Outside

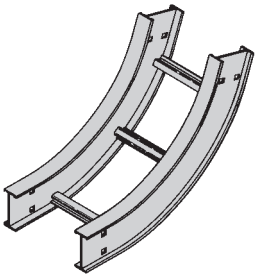

60˚ Vertical Inside

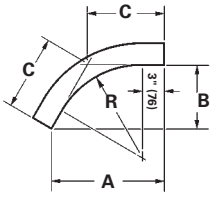

60˚ VO

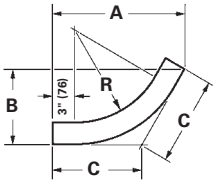

60˚ VI

Bend Radius R	Ladder Width		(*) Insert "VO" for Vert. Outside Bend Insert "VI" for Vert. Inside Bend	VO Side Rail Height 4" - 7"			VI Side Rail Height											
							4"			5"			6"			7"		
				A	B	C	A	B	C	A	B	C	A	B	C	A	B	C
in.	in.	mm	Catalog No.	in.	in.	in.	in.	in.	in.	in.	in.	in.	in.	in.	in.	in.	in.	in.
12 (305)	6	152	(Prefix)(*)-06-60R12	$14\frac{7}{8}$ (378)	$8\frac{5}{8}$ (219)	$9\frac{15}{16}$ (252)	18 (457)	$10\frac{3}{8}$ (263)	12 (305)	$18\frac{13}{16}$ (478)	$10\frac{7}{8}$ (276)	$12\frac{9}{16}$ (319)	$19\frac{11}{16}$ (500)	$11\frac{3}{8}$ (289)	$13\frac{1}{8}$ (333)	$20\frac{15}{16}$ (522)	$11\frac{7}{8}$ (301)	$13\frac{11}{16}$ (347)
	9	228	(Prefix)(*)-09-60R12															
	12	305	(Prefix)(*)-12-60R12															
	18	457	(Prefix)(*)-18-60R12															
	24	609	(Prefix)(*)-24-60R12															
	30	762	(Prefix)(*)-30-60R12															
	36	914	(Prefix)(*)-36-60R12															
24 (609)	6	152	(Prefix)(*)-06-60R24	$25\frac{9}{16}$ (643)	$14\frac{5}{8}$ (371)	$16\frac{7}{8}$ (428)	$28\frac{3}{8}$ (721)	$16\frac{3}{8}$ (415)	$18\frac{15}{16}$ (481)	$29\frac{1}{4}$ (743)	$16\frac{7}{8}$ (428)	$19\frac{1}{2}$ (495)	$30\frac{1}{16}$ (763)	$17\frac{3}{8}$ (441)	$20\frac{1}{16}$ (509)	$30\frac{15}{16}$ (786)	$17\frac{7}{8}$ (454)	$20\frac{5}{8}$ (524)
	9	228	(Prefix)(*)-09-60R24															
	12	305	(Prefix)(*)-12-60R24															
	18	457	(Prefix)(*)-18-60R24															
	24	609	(Prefix)(*)-24-60R24															
	30	762	(Prefix)(*)-30-60R24															
	36	914	(Prefix)(*)-36-60R24															
36 (914)	6	152	(Prefix)(*)-06-60R36	$35\frac{3}{4}$ (908)	$20\frac{5}{8}$ (524)	$23\frac{13}{16}$ (605)	$38\frac{3}{4}$ (984)	$22\frac{3}{8}$ (568)	$25\frac{7}{8}$ (1657)	$39\frac{5}{8}$ (1006)	$22\frac{7}{8}$ (581)	$26\frac{7}{16}$ (672)	$40\frac{1}{2}$ (1029)	$23\frac{3}{8}$ (594)	27 (686)	$41\frac{3}{8}$ (1051)	$23\frac{7}{8}$ (606)	$27\frac{9}{16}$ (700)
	9	228	(Prefix)(*)-09-60R36															
	12	305	(Prefix)(*)-12-60R36															
	18	457	(Prefix)(*)-18-60R36															
	24	609	(Prefix)(*)-24-60R36															
	30	762	(Prefix)(*)-30-60R36															
	36	914	(Prefix)(*)-36-60R36															

(Pre) See page AL-10 for catalog number prefix.
Width dimensions are to inside wall.
Manufacturing tolerances apply to all dimensions.

Vertical Bend 45˚ (VO, VI)

1 pair splice plates with hardware included.

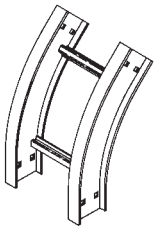

45˚ Vertical Outside

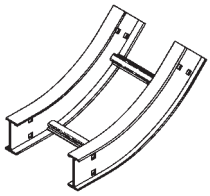

45˚ Vertical Inside

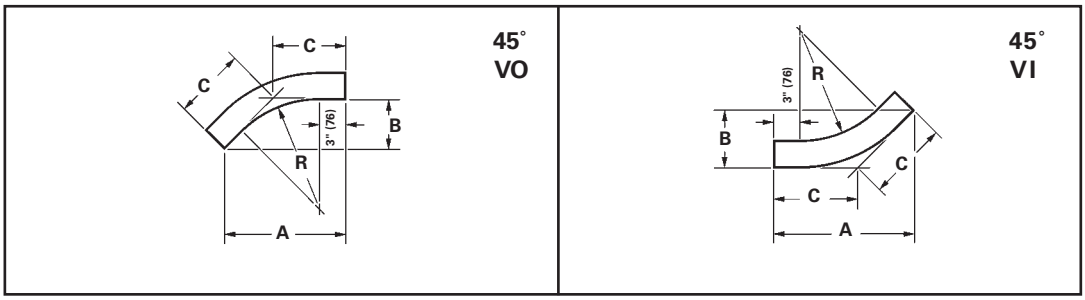

Bend Radius R	Ladder Width		(*) Insert "VO" for Vert. Outside Bend Insert "VI" for Vert. Inside Bend	VO Side Rail Height 4" - 7"			VI Side Rail Height											
							4"			5"			6"			7"		
				A	B	C	A	B	C	A	B	C	A	B	C	A	B	C
in.	in.	mm	Catalog No.	in.	in.	in.	in.	in.	in.	in.	in.	in.	in.	in.	in.	in.	in.	in.
12 (305)	6	152	**(Prefix)(*)-06-45R12**	$13\frac{5}{8}$ (346)	$5\frac{3}{8}$ (136)	8 (203)	$16\frac{1}{8}$ (409)	$6\frac{11}{16}$ (170)	$9\frac{7}{16}$ (239)	$16\frac{7}{8}$ (428)	7 (178)	$9\frac{7}{8}$ (251)	$17\frac{9}{16}$ (446)	$7\frac{1}{4}$ (184)	$10\frac{1}{4}$ (260)	$18\frac{1}{4}$ (463)	$7\frac{9}{16}$ (192)	$10\frac{11}{16}$ (271)
	9	228	**(Prefix)(*)-09-45R12**															
	12	305	**(Prefix)(*)-12-45R12**															
	18	457	**(Prefix)(*)-18-45R12**															
	24	609	**(Prefix)(*)-24-45R12**															
	30	762	**(Prefix)(*)-30-45R12**															
	36	914	**(Prefix)(*)-36-45R12**															
24 (609)	6	152	**(Prefix)(*)-06-45R24**	$22\frac{1}{8}$ (562)	$9\frac{3}{16}$ (233)	$12\frac{15}{16}$ (328)	$24\frac{5}{8}$ (625)	$10\frac{3}{16}$ (259)	$14\frac{7}{16}$ (366)	$25\frac{5}{16}$ (643)	$10\frac{1}{2}$ (267)	$14\frac{13}{16}$ (376)	26 (660)	$10\frac{3}{4}$ (273)	$15\frac{1}{4}$ (387)	$26\frac{3}{4}$ (679)	$11\frac{1}{16}$ (281)	$15\frac{5}{8}$ (397)
	9	228	**(Prefix)(*)-09-45R24**															
	12	305	**(Prefix)(*)-12-45R24**															
	18	457	**(Prefix)(*)-18-45R24**															
	24	609	**(Prefix)(*)-24-45R24**															
	30	762	**(Prefix)(*)-30-45R24**															
	36	914	**(Prefix)(*)-36-45R24**															
36 (914)	6	152	**(Prefix)(*)-06-45R36**	$30\frac{11}{16}$ (779)	$12\frac{11}{16}$ (322)	18 (457)	$33\frac{1}{8}$ (841)	$13\frac{3}{4}$ (349)	$19\frac{7}{16}$ (494)	$33\frac{13}{16}$ (859)	14 (356)	$19\frac{13}{16}$ (503)	$34\frac{9}{16}$ (878)	$14\frac{15}{16}$ (364)	$20\frac{1}{4}$ (514)	$35\frac{1}{4}$ (895)	$14\frac{5}{8}$ (371)	$20\frac{5}{8}$ (524)
	9	228	**(Prefix)(*)-09-45R36**															
	12	305	**(Prefix)(*)-12-45R36**															
	18	457	**(Prefix)(*)-18-45R36**															
	24	609	**(Prefix)(*)-24-45R36**															
	30	762	**(Prefix)(*)-30-45R36**															
	36	914	**(Prefix)(*)-36-45R36**															

(Pre) See page AL-10 for catalog number prefix.
Width dimensions are to inside wall.
Manufacturing tolerances apply to all dimensions.

Vertical Bend 30˚ (VO, VI)

1 pair splice plates with hardware included.

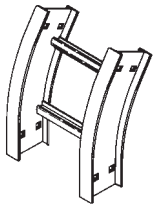

30˚ Vertical Outside

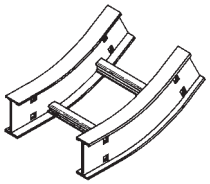

30˚ Vertical Inside

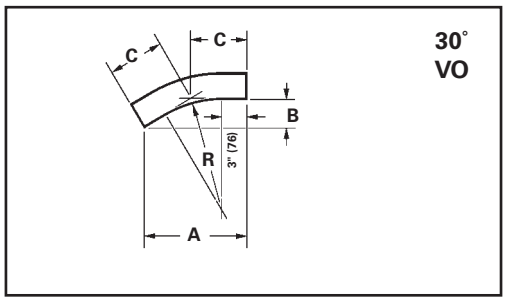

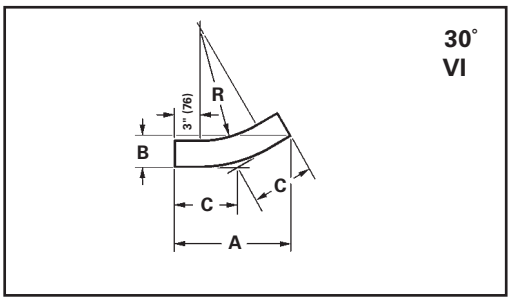

Bend Radius R	Ladder Width		(*) Insert "VO" for Vert. Outside Bend Insert "VI" for Vert. Inside Bend	VO Side Rail Height 4" - 7"			VI Side Rail Height											
							4"			5"			6"			7"		
				A	B	C	A	B	C	A	B	C	A	B	C	A	B	C
in.	in.	mm	Catalog No.	in.	in.	in.	in.	in.	in.	in.	in.	in.	in.	in.	in.	in.	in.	in.
12 (305)	6	152	**(Prefix)(*)-06-30R12**	$11\frac{5}{8}$ (295)	$3\frac{1}{8}$ (79)	$6\frac{1}{4}$ (159)	$13\frac{7}{16}$ (341)	$3\frac{5}{8}$ (92)	$7\frac{3}{16}$ (182)	$13\frac{15}{16}$ (354)	$3\frac{3}{4}$ (95)	$7\frac{7}{16}$ (189)	$14\frac{7}{16}$ (366)	$3\frac{7}{8}$ (98)	$7\frac{3}{4}$ (197)	$14\frac{7}{8}$ (378)	4 (101)	8 (203)
	9	228	**(Prefix)(*)-09-30R12**															
	12	305	**(Prefix)(*)-12-30R12**															
	18	457	**(Prefix)(*)-18-30R12**															
	24	609	**(Prefix)(*)-24-30R12**															
	30	762	**(Prefix)(*)-30-30R12**															
	36	914	**(Prefix)(*)-36-30R12**															
24 (609)	6	152	**(Prefix)(*)-06-30R24**	$17\frac{5}{8}$ (447)	$4\frac{3}{4}$ (120)	$9\frac{7}{16}$ (239)	$19\frac{7}{16}$ (493)	$5\frac{3}{16}$ (132)	$10\frac{7}{16}$ (265)	$19\frac{15}{16}$ (506)	$5\frac{5}{16}$ (135)	$10\frac{11}{16}$ (271)	$20\frac{7}{16}$ (519)	$5\frac{7}{16}$ (138)	$10\frac{15}{16}$ (278)	$20\frac{7}{8}$ (530)	$5\frac{5}{8}$ (143)	$11\frac{3}{16}$ (284)
	9	228	**(Prefix)(*)-09-30R24**															
	12	305	**(Prefix)(*)-12-30R24**															
	18	457	**(Prefix)(*)-18-30R24**															
	24	609	**(Prefix)(*)-24-30R24**															
	30	762	**(Prefix)(*)-30-30R24**															
	36	914	**(Prefix)(*)-36-30R24**															
36 (914)	6	152	**(Prefix)(*)-06-30R36**	$23\frac{11}{16}$ (602)	$6\frac{5}{16}$ (160)	$12\frac{3}{4}$ (324)	$25\frac{7}{16}$ (646)	$6\frac{13}{16}$ (173)	$13\frac{5}{8}$ (346)	$25\frac{15}{16}$ (659)	$6\frac{15}{16}$ (176)	$13\frac{7}{8}$ (352)	$26\frac{7}{16}$ (672)	$7\frac{1}{16}$ (179)	$14\frac{3}{16}$ (360)	$26\frac{15}{16}$ (684)	$7\frac{1}{4}$ (184)	$14\frac{7}{16}$ (367)
	9	228	**(Prefix)(*)-09-30R36**															
	12	305	**(Prefix)(*)-12-30R36**															
	18	457	**(Prefix)(*)-18-30R36**															
	24	609	**(Prefix)(*)-24-30R36**															
	30	762	**(Prefix)(*)-30-30R36**															
	36	914	**(Prefix)(*)-36-30R36**															

(Pre) See page AL-10 for catalog number prefix.
Width dimensions are to inside wall.
Manufacturing tolerances apply to all dimensions.

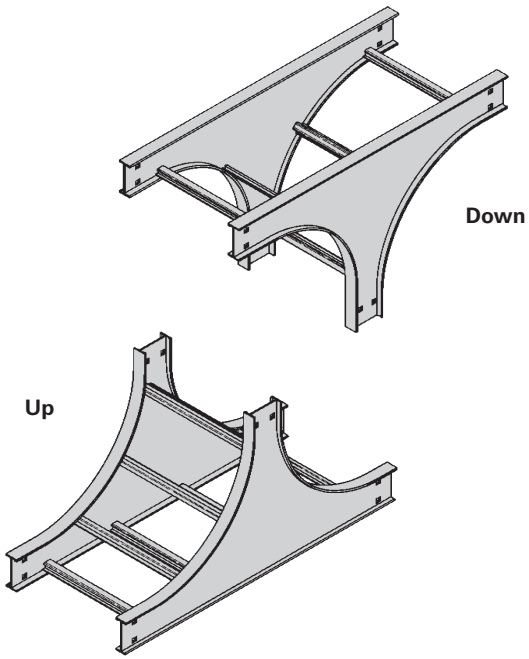

Vertical Tee Up/Down (VTU/VT)

2 pair splice plates with hardware included.

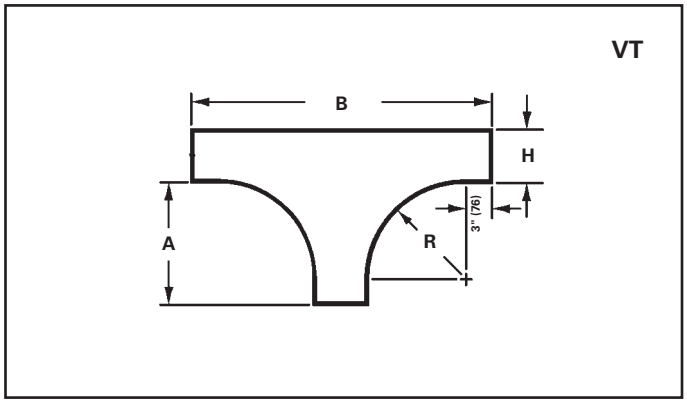

Bend Radius R in.	Ladder Width in.	Ladder Width mm	Vertical Tee Down Catalog No.	Vertical Tee Up Catalog No.	Side Rail Height "H" 4" A in.	4" B in.	5" A in.	5" B in.	6" A in.	6" B in.	7" A in.	7" B in.
12 (305)	6	152	(Prefix)VTD-06-R12	(Prefix)VTU-06-R12	15 (381)	33 7/16 (849)	15 (381)	34 3/8 (874)	15 (381)	35 3/8 (899)	15 (381)	36 3/8 (924)
	9	228	(Prefix)VTD-09-R12	(Prefix)VTU-09-R12								
	12	305	(Prefix)VTD-12-R12	(Prefix)VTU-12-R12								
	18	457	(Prefix)VTD-18-R12	(Prefix)VTU-18-R12								
	24	609	(Prefix)VTD-24-R12	(Prefix)VTU-24-R12								
	30	762	(Prefix)VTD-30-R12	(Prefix)VTU-30-R12								
	36	914	(Prefix)VTD-36-R12	(Prefix)VTU-36-R12								
24 (609)	6	152	(Prefix)VTD-06-R24	(Prefix)VTU-06-R24	27 (6867)	57 7/16 (1458)	27 (686)	58 3/8 (1483)	27 (686)	59 3/8 (1508)	27 (686)	60 3/8 (1533)
	9	228	(Prefix)VTD-09-R24	(Prefix)VTU-09-R24								
	12	305	(Prefix)VTD-12-R24	(Prefix)VTU-12-R24								
	18	457	(Prefix)VTD-18-R24	(Prefix)VTU-18-R24								
	24	609	(Prefix)VTD-24-R24	(Prefix)VTU-24-R24								
	30	762	(Prefix)VTD-30-R24	(Prefix)VTU-30-R24								
	36	914	(Prefix)VTD-36-R24	(Prefix)VTU-36-R24								
36 (914)	6	152	(Prefix)VTD-06-R36	(Prefix)VTU-06-R36	39 (991)	81 7/16 (2068)	39 (991)	82 3/8 (2093)	39 (991)	83 3/8 (2118)	39 (991)	84 3/8 (2143)
	9	228	(Prefix)VTD-09-R36	(Prefix)VTU-09-R36								
	12	305	(Prefix)VTD-12-R36	(Prefix)VTU-12-R36								
	18	457	(Prefix)VTD-18-R36	(Prefix)VTU-18-R36								
	24	609	(Prefix)VTD-24-R36	(Prefix)VTU-24-R36								
	30	762	(Prefix)VTD-30-R36	(Prefix)VTU-30-R36								
	36	914	(Prefix)VTD-36-R36	(Prefix)VTU-36-R36								

(Pre) See page AL-10 for catalog number prefix.
Width dimensions are to inside wall.
Manufacturing tolerances apply to all dimensions.

Horizontal Expanding Tee (ET)

2 pair splice plates with hardware included.

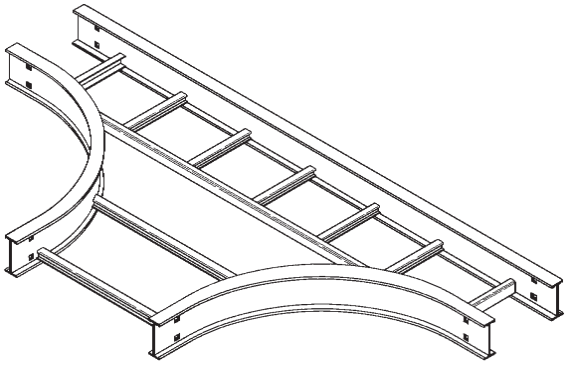

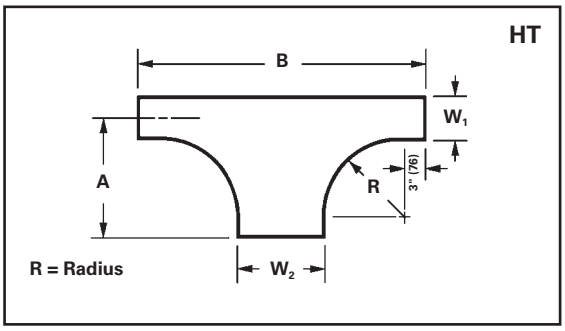

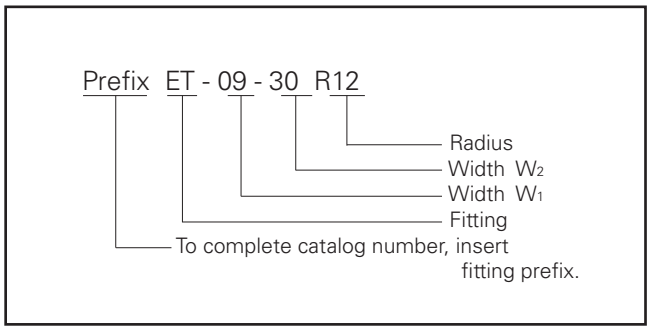

Ladder Width W1 in.	Ladder Width W1 mm	Ladder Width W2 in.	Ladder Width W2 mm	* Insert Radius (12", 24", or 36") Catalog No.	12" Radius A in.	12" Radius A mm	12" Radius B in.	12" Radius B mm	24" Radius A in.	24" Radius A mm	24" Radius B in.	24" Radius B mm	36" Radius A in.	36" Radius A mm	36" Radius B in.	36" Radius B mm
6	152	9	228	**(Prefix)ET-06-09-R***	18 1/16	458	39 7/8	1013	30 1/16	763	64 1/4	1631	42 1/16	1068	87 1/4	2241
		12	305	**(Prefix)ET-06-12-R***	18 1/16	458	42 1/4	1073	30 1/16	763	66 9/16	1691	42 1/16	1068	90 9/16	2301
		18	457	**(Prefix)ET-06-18-R***	18 1/16	458	48 1/2	1232	30 1/16	763	72 1/16	1830	42 1/16	1068	96 1/16	2440
		24	609	**(Prefix)ET-06-24-R***	18 1/16	458	54 13/16	1392	30 1/16	763	78 3/8	1991	42 1/16	1068	102 3/8	2601
		30	762	**(Prefix)ET-06-30-R***	18 1/16	458	60 1/4	1532	30 1/16	763	84 5/8	2150	42 1/16	1068	108 5/8	2760
		36	914	**(Prefix)ET-06-36-R***	18 1/16	458	66 9/16	1691	30 1/16	763	90 15/16	2310	42 1/16	1068	114 15/16	2920
9	228	12	305	**(Prefix)ET-09-12-R***	19 9/16	497	42 1/4	1073	31 9/16	801	66 9/16	1691	43 9/16	1106	90 9/16	2301
		18	457	**(Prefix)ET-09-19-R***	19 9/16	497	48 1/2	1232	31 9/16	801	72 1/16	1830	43 9/16	1106	96 1/16	2440
		24	609	**(Prefix)ET-09-24-R***	19 9/16	497	54 13/16	1392	31 9/16	801	78 3/8	1991	43 9/16	1106	102 3/8	2601
		30	762	**(Prefix)ET-09-30-R***	19 9/16	497	60 1/4	1532	31 9/16	801	84 5/8	2150	43 9/16	1106	108 5/8	2760
		36	914	**(Prefix)ET-09-36-R***	19 9/16	497	66 9/16	1691	31 9/16	801	90 15/16	2310	43 9/16	1106	114 15/16	2920
12	305	18	457	**(Prefix)ET-12-18-R***	21 1/16	535	48 1/2	1232	33 1/16	839	72 1/16	1830	45 1/16	1144	96 1/16	2440
		24	609	**(Prefix)ET-12-24-R***	21 1/16	535	54 13/16	1392	33 1/16	839	78 3/8	1991	45 1/16	1144	102 3/8	2601
		30	762	**(Prefix)ET-12-30-R***	21 1/16	535	60 1/4	1532	33 1/16	839	84 5/8	2150	45 1/16	1144	108 5/8	2760
		36	914	**(Prefix)ET-12-36-R***	21 1/16	535	66 9/16	1691	33 1/16	839	90 15/16	2310	45 1/16	1144	114 15/16	2920
18	457	24	609	**(Prefix)ET-18-24-R***	24 1/16	611	54 13/16	1392	36 1/16	916	78 3/8	1991	48 1/16	1221	102 3/8	2601
		30	762	**(Prefix)ET-18-30-R***	24 1/16	611	60 1/4	1532	36 1/16	916	84 5/8	2150	48 1/16	1221	108 5/8	2760
		36	914	**(Prefix)ET-18-36-R***	24 1/16	611	66 9/16	1691	36 1/16	916	90 15/16	2310	48 1/16	1221	114 15/16	2920
24	609	30	762	**(Prefix)ET-24-30-R***	27 1/16	687	60 1/4	1532	39 1/16	992	84 5/8	2150	51 1/16	1297	108 5/8	2760
		36	914	**(Prefix)ET-24-36-R***	27 1/16	687	66 9/16	1691	39 1/16	992	90 15/16	2310	51 1/16	1297	114 15/16	2920
30	762	36	914	**(Prefix)ET-30-36-R***	30 1/16	763	66 9/16	1691	42 1/16	1068	90 15/16	2310	54 1/16	1373	114 15/16	2920

(Pre) See page AL-10 for catalog number prefix.
Width dimensions are to inside wall.
Manufacturing tolerances apply to all dimensions.

Horizontal Reducing Tee (RT)

2 pair splice plates with hardware included.

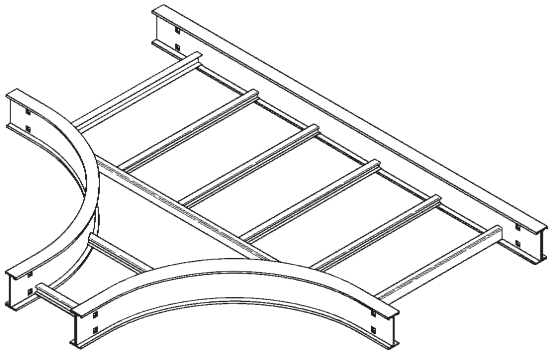

Prefix RT - 36 - 18 R24

- Radius
- Width W_2
- Width W_1
- Fitting
- To complete catalog number, insert fitting prefix.

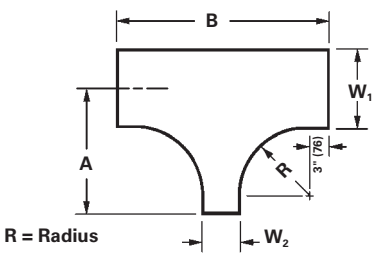

Ladder Width W1 in.	W1 mm	W2 in.	W2 mm	* Insert Radius (12", 24", or 36") Catalog No.	12" Radius A in.	12" Radius A mm	12" Radius B in.	12" Radius B mm	24" Radius A in.	24" Radius A mm	24" Radius B in.	24" Radius B mm	36" Radius A in.	36" Radius A mm	36" Radius B in.	36" Radius B mm
9	228	6	152	**(Prefix)RT-09-06-R***	19 9/16	497	36 3/4	933	31 9/16	801	61 1/16	1551	43 9/16	1106	85 1/16	2161
12	305	6	152	**(Prefix)RT-12-06-R***	21 1/16	535	36 3/4	933	33 1/16	839	61 1/16	1551	45 1/16	1144	85 1/16	2161
		9	228	**(Prefix)RT-12-09-R***	21 1/16	535	39 7/8	1013	33 1/16	839	64 1/4	1631	45 1/16	1144	88 1/4	2241
18	475	6	152	**(Prefix)RT-18-06-R***	24 1/16	611	36 3/4	933	36 1/16	916	61 1/16	1551	48 1/16	1221	85 1/16	2161
		9	228	**(Prefix)RT-18-09-R***	24 1/16	611	39 7/8	1013	36 1/16	916	64 1/4	1631	48 1/16	1221	88 1/4	2241
		12	305	**(Prefix)RT-18-12-R***	24 1/16	611	42 1/4	1073	36 1/16	916	66 9/16	1691	48 1/16	1221	90 9/16	2301
24	609	6	152	**(Prefix)RT-24-06-R***	27 1/16	687	36 3/4	933	39 1/16	992	61 1/16	1551	51 1/16	1297	85 1/16	2161
		9	228	**(Prefix)RT-24-09-R***	27 1/16	687	39 7/8	1013	39 1/16	992	64 1/4	1631	51 1/16	1297	88 1/4	2241
		12	305	**(Prefix)RT-24-12-R***	27 1/16	687	42 1/4	1073	39 1/16	992	66 9/16	1691	51 1/16	1297	90 9/16	2301
		18	457	**(Prefix)RT-24-18-R***	27 1/16	687	48 1/2	1232	39 1/16	992	72 1/16	1830	51 1/16	1297	96 1/16	2440
30	762	6	152	**(Prefix)RT-30-06-R***	30 1/16	763	36 3/4	933	42 1/16	1068	61 1/16	1551	54 1/16	1373	85 1/16	2161
		9	228	**(Prefix)RT-30-09-R***	30 1/16	763	39 7/8	1013	42 1/16	1068	64 1/4	1631	54 1/16	1373	88 1/4	2241
		12	305	**(Prefix)RT-30-12-R***	30 1/16	763	42 1/4	1073	42 1/16	1068	66 9/16	1691	54 1/16	1373	90 9/16	2301
		18	457	**(Prefix)RT-30-18-R***	30 1/16	763	48 1/2	1232	42 1/16	1068	72 1/16	1830	54 1/16	1373	96 1/16	2440
		24	609	**(Prefix)RT-30-24-R***	30 1/16	763	54 13/16	1392	42 1/16	1068	78 1/8	1991	54 1/16	1373	102 1/8	2601
36	914	6	152	**(Prefix)RT-36-06-R***	33 1/16	839	36 3/4	933	45 1/16	1144	61 1/16	1551	57 1/16	1449	85 1/16	2161
		9	228	**(Prefix)RT-36-09-R***	33 1/16	839	39 7/8	1013	45 1/16	1144	64 1/4	1631	57 1/16	1449	88 1/4	2241
		12	305	**(Prefix)RT-36-12-R***	33 1/16	839	42 1/4	1073	45 1/16	1144	66 9/16	1691	57 1/16	1449	90 9/16	2301
		18	457	**(Prefix)RT-36-18-R***	33 1/16	839	48 1/2	1232	45 1/16	1144	72 1/16	1830	57 1/16	1449	96 1/16	2440
		24	609	**(Prefix)RT-36-24-R***	33 1/16	839	54 13/16	1392	45 1/16	1144	78 1/8	1991	57 1/16	1449	102 1/8	2601
		30	762	**(Prefix)RT-36-30-R***	33 1/16	839	60 1/4	1532	45 1/16	1144	84 5/8	2150	57 1/16	1449	108 5/8	2760

(Pre) See page AL-10 for catalog number prefix.
Width dimensions are to inside wall.
Manufacturing tolerances apply to all dimensions.

Aluminum

Horizontal Expanding/Reducing Cross (RX)

3 pair splice plates with hardware included.

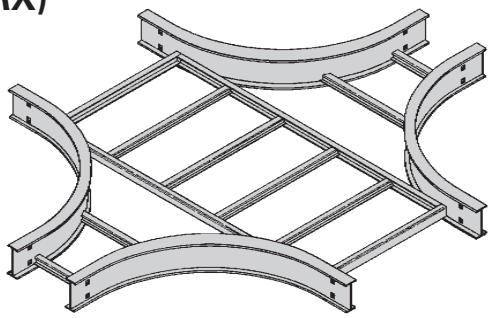

Prefix RX - 09 - 24 R24

- Radius
- Width W_2
- Width W_1
- Fitting
- To complete catalog number, insert fitting prefix.

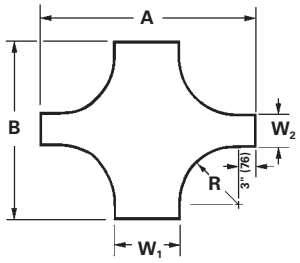

Ladder Width W1 in.	Ladder Width W1 mm	Ladder Width W2 in.	Ladder Width W2 mm	* Insert Radius (12", 24", or 36") Catalog No.	12" Radius A in.	12" Radius A mm	12" Radius B in.	12" Radius B mm	24" Radius A in.	24" Radius A mm	24" Radius B in.	24" Radius B mm	36" Radius A in.	36" Radius A mm	36" Radius B in.	36" Radius B mm
6	152	9	228	**(Prefix)RX-06-09-R***	36 3/4	933	39 7/8	1013	60 1/16	1525	64 1/4	1631	84 1/16	2135	88 1/4	2241
		12	305	**(Prefix)RX-06-12-R***	36 3/4	933	42 1/4	1073	60 1/16	1525	66 9/16	1691	84 1/16	2135	90 9/16	2301
		18	457	**(Prefix)RX-06-18-R***	36 3/4	933	48 1/2	1232	60 1/16	1525	72 1/16	1830	84 1/16	2135	96 1/16	2440
		24	609	**(Prefix)RX-06-24-R***	36 3/4	933	54 13/16	1392	60 1/16	1525	78 3/8	1991	84 1/16	2135	102 3/8	2601
		30	762	**(Prefix)RX-06-30-R***	36 3/4	933	60 1/4	1532	60 1/16	1525	84 5/8	2150	84 1/16	2135	108 5/8	2760
		36	914	**(Prefix)RX-06-36-R***	36 3/4	933	66 9/16	1691	60 1/16	1525	90 15/16	2310	84 1/16	2135	114 15/16	2920
9	228	12	305	**(Prefix)RX-09-12-R***	39 7/8	1013	42 1/4	1073	64 1/4	1632	66 9/16	1691	88 1/4	2242	90 9/16	2301
		18	457	**(Prefix)RX-09-19-R***	39 7/8	1013	48 1/2	1232	64 1/4	1632	72 1/16	1830	88 1/4	2242	96 1/16	2440
		24	609	**(Prefix)RX-09-24-R***	39 7/8	1013	54 13/16	1392	64 1/4	1632	78 3/8	1991	88 1/4	2242	102 3/8	2601
		30	762	**(Prefix)RX-09-30-R***	39 7/8	1013	60 1/4	1532	64 1/4	1632	84 5/8	2150	88 1/4	2242	108 5/8	2760
		36	914	**(Prefix)RX-09-36-R***	39 7/8	1013	66 9/16	1691	64 1/4	1632	90 15/16	2310	88 1/4	2242	114 15/16	2920
12	305	18	457	**(Prefix)RX-12-18-R***	42 1/4	1073	48 1/2	1232	66 9/16	1691	72 1/16	1830	90 9/16	2301	96 1/16	2440
		24	609	**(Prefix)RX-12-24-R***	42 1/4	1073	54 13/16	1392	66 9/16	1691	78 3/8	1991	90 9/16	2301	102 3/8	2601
		30	762	**(Prefix)RX-12-30-R***	42 1/4	1073	60 1/4	1532	66 9/16	1691	84 5/8	2150	90 9/16	2301	108 5/8	2760
		36	914	**(Prefix)RX-12-36-R***	42 1/4	1073	66 9/16	1691	66 9/16	1691	90 15/16	2310	90 9/16	2301	114 15/16	2920
18	457	24	609	**(Prefix)RX-18-24-R***	48 1/2	1232	54 13/16	1392	72 1/16	1830	78 3/8	1991	96 1/16	2440	102 3/8	2601
		30	762	**(Prefix)RX-18-30-R***	48 1/2	1232	60 1/4	1532	72 1/16	1830	84 5/8	2150	96 1/16	2440	108 5/8	2760
		36	914	**(Prefix)RX-18-36-R***	48 1/2	1232	66 9/16	1691	72 1/16	1830	90 15/16	2310	96 1/16	2440	114 15/16	2920
24	609	30	762	**(Prefix)RX-24-30-R***	54 13/16	1392	60 1/4	1532	78 3/8	1991	84 5/8	2150	102 3/8	2601	108 5/8	2760
		36	914	**(Prefix)RX-24-36-R***	54 13/16	1392	66 9/16	1691	78 3/8	1991	90 15/16	2310	102 3/8	2601	114 15/16	2920
30	762	36	914	**(Prefix)RX-30-36-R***	60 1/4	1530	66 9/16	1691	84 5/8	2149	90 15/16	2310	108 1/8	2759	114 15/16	2920

(Pre) See page AL-10 for catalog number prefix.
Width dimensions are to inside wall.
Manufacturing tolerances apply to all dimensions.

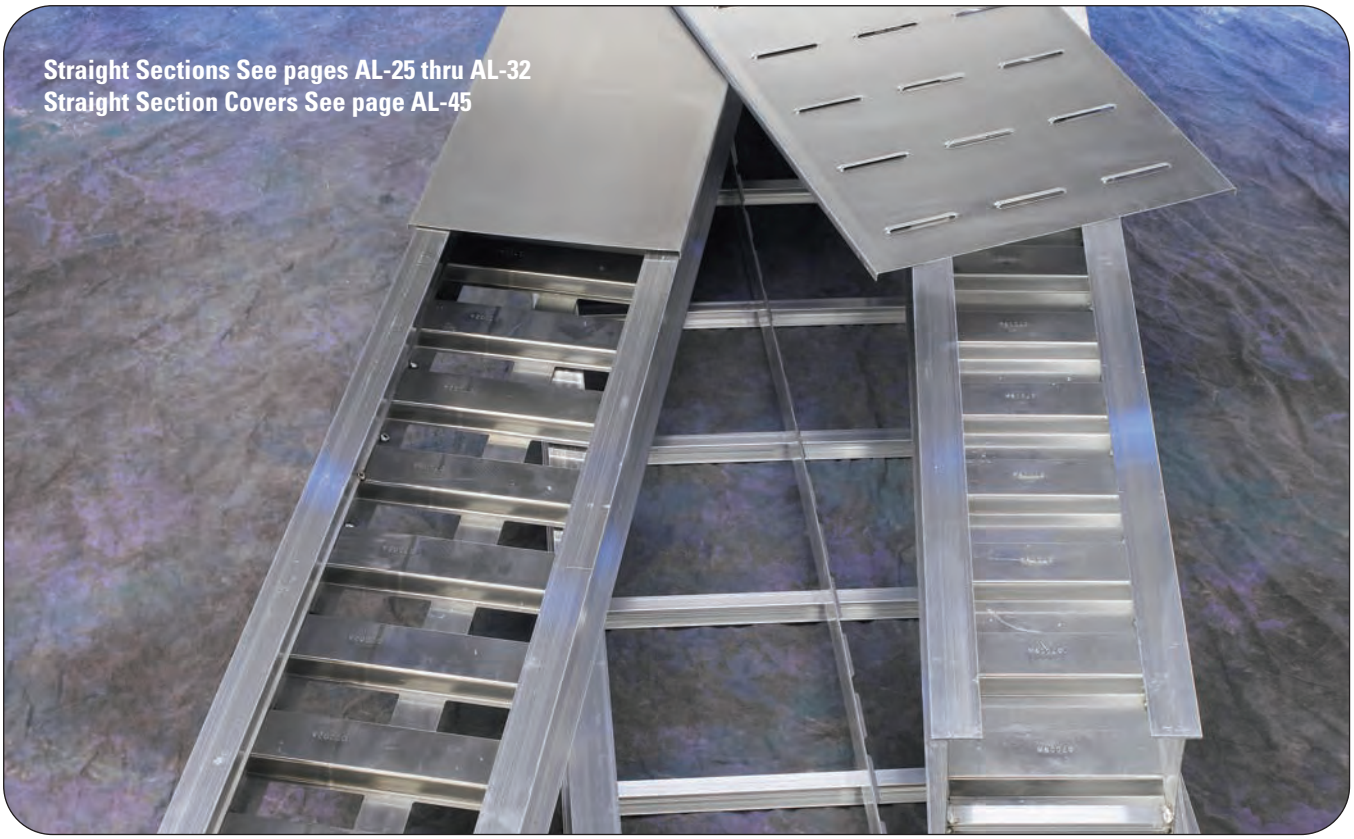
Straight Sections See pages AL-25 thru AL-32
Straight Section Covers See page AL-45

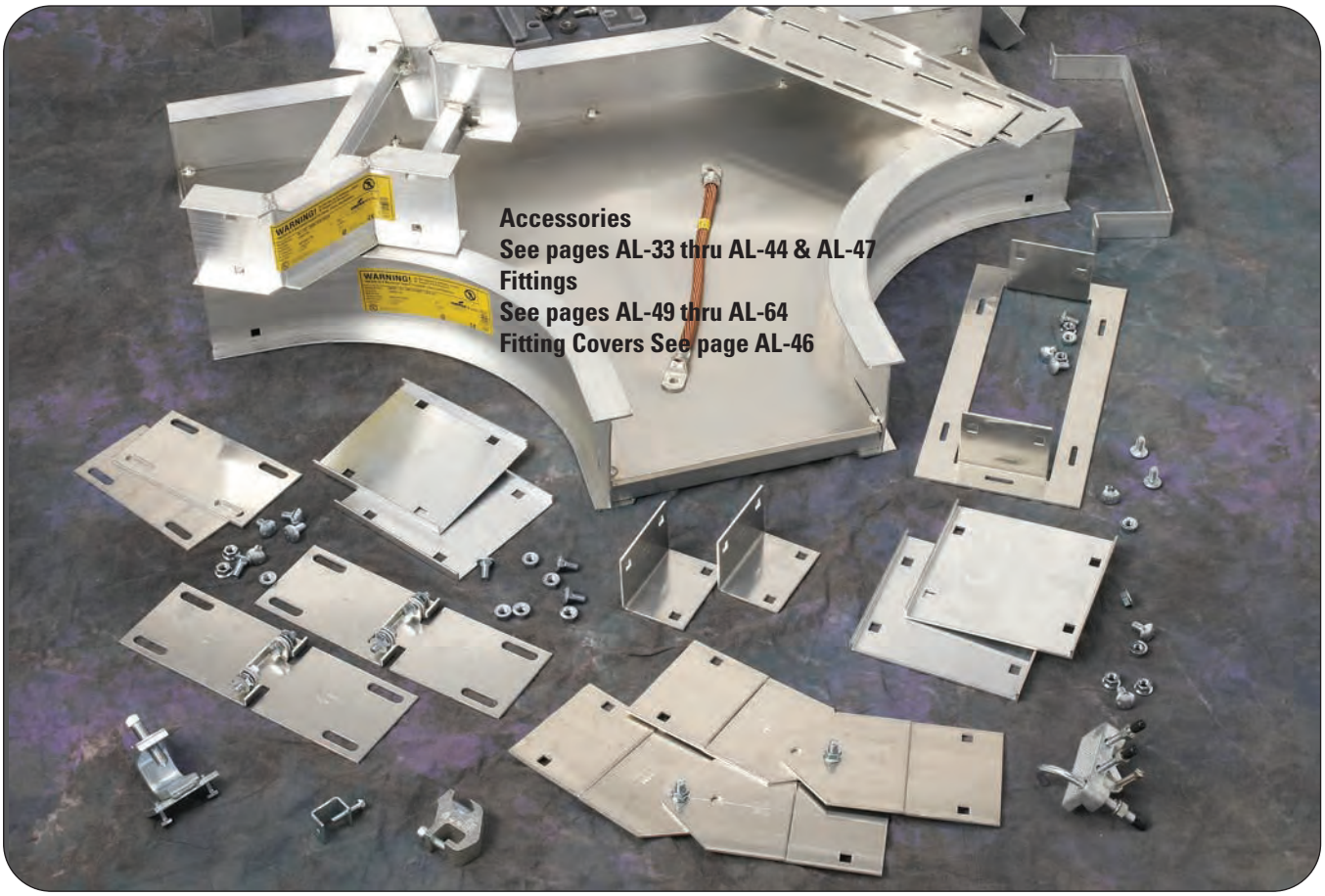
Accessories
See pages AL-33 thru AL-44 & AL-47
Fittings
See pages AL-49 thru AL-64
Fitting Covers See page AL-46

Aluminum Cable Ladder, Series 2, 3 & 4

Side Rails

B-Line I-Beam -- the most efficient cable ladder side rail

Constructed with "Copper-free" 6063-T6 Aluminum Alloy

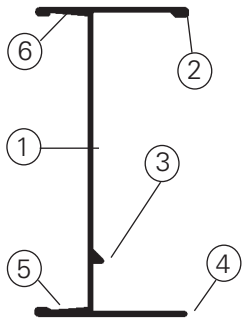

1. **I-beam side rail design**
   - maximize strength-to-weight ratio
2. **Engineered Design: Optimizes load capacity**
3. **Weld bead**
   - positive rung support
   - added material disperses heat
4. **Bottom flange inside**
   - positive rung support
5. **Bottom flange outside**
   - lower flange for hold down clamps and expansion guides
6. **Top flange outside**
   - upper flange for securing the ladder cover or the conduit-to-ladder adapter

Rungs

The rungs can represent 40% of your cable ladder system.

Rung A Standard for widths through 24"
The 24" width supports 589 lbs. with safety factor 1.5

Rung B Standard for widths greater than 24"
The 36" width supports 487 lbs. with safety factor 1.5

Splices

Unique Wedge Lock splice system:

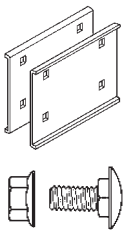

- Channel-shaped for extra strength
- Snaps into the side rail
- Positions and holds for bolting, a labor-saving feature
- Four bolt pattern reduces installation time
- 316 Stainless Steel available

Fittings

Surpasses NEMA VE 1 requirements
3" straight tangents for splice integrity

200 lb. Concentrated Load

Rungs and side rail engineered to support a 200 lb. concentrated load plus cable load

3" NEMA VE 1 Loading Depth
4" Side Rail Height

Straight Section Part Numbering

Prefix

Example: **24 A 09 - 24 - 144**

Series	Material	*Type	*Width	Length
24	**A** = Aluminum	**Ladder-** **06** = 6" rung spacing **09** = 9" rung spacing **12** = 12" rung spacing **Trough-** 6" thru 36" wide **VT** = Vented Trough **ST** = Non-Ventilated Trough	**06** = 6" **09** = 9" **12** = 12" **18** = 18" **24** = 24" **30** = 30" **36** = 36"	① **144** = 12 ft. ② 120 = 10 ft.
34				① **240** = 20 ft. ② 144 = 12 ft.

①Primary Length.
②Secondary Length.

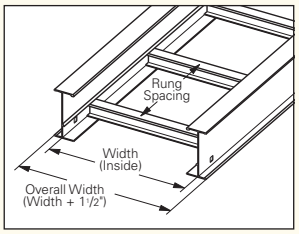

See page MIS-2 for additional rung options. *Special sizes available.

Ladder Type
(Specify Rung Spacing)

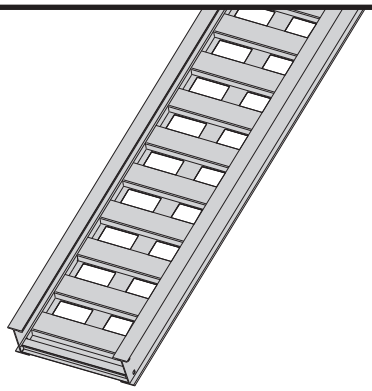

Ventilated Trough

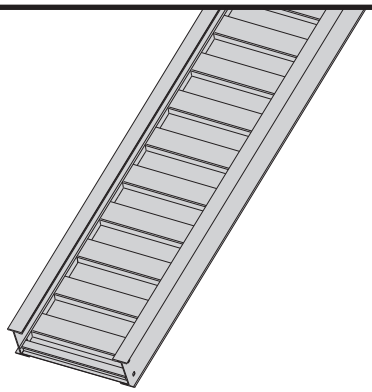

Non-Ventilated Trough

Dimensional & Loading Information

3" NEMA VE 1 Loading Depth
4" Side Rail Height

Values are based on simple beam tests per NEMA VE 1 on 36" wide cable ladder with rungs spaced on 12" centers. Cable ladders will support without collapse a 200 lb. (90.7 kg) concentrated load over and above published loads. Published load safety factor is 1.5. To convert 1.5 safety factor to 2.0, multiply the published load by 0.75. To obtain mid-span deflection, multiply a load by the deflection multiplier. Cable ladder must be supported on spans shorter than or equal to the length of the cable ladder being installed.

Individual rungs will support without collapse a 200 lb. (90.7 kg) concentrated load applied at the mid-span of the rung, over and above the NEMA rated cable load with a 1.5 safety factor for highlighted NEMA spans and loads.

B-Line Series & Side Rail Dimensions	NEMA, CSA & UL Classifications	Span ft	Span meters	Load lbs/ft	Load kg/m	Deflection Multiplier		Design Factors for Two Rails	
24 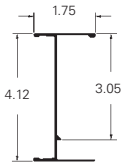	NEMA: 16A, 12C	6	1.8	487*	725*	0.001	0.017		
	CSA: D1-3m	8	2.4	284	422	0.003	0.055	Area=1.05 in^2	Area=6.77 cm^2
		10	3.0	181	270	0.008	0.135	Sx=1.34 in^3	Sx=21.96 cm^3
	UL Cross-Sectional	12	3.7	126	187	0.016	0.279	Ix=2.85 in^4	Ix=118.63 cm^4
	Area: 1.00 in^2	14	4.3	93	138	0.030	0.518		
		16	4.9	71	105	0.052	0.883		

When ladders are used in continuous spans, the deflection of the ladder is reduced by as much as 50%.
Design factors: Ix = Moment of Inertia, Sx = Section Modulus.
* When using 18" rung spacing, load capacity is limited to 394 lbs/ft (586.27 kg/m) for 30" ladder width and 325 lbs/ft (483.6 kg/m) for 36" ladder width.

B-Line Series & Side Rail Dimensions	NEMA, CSA & UL Classifications	Span ft	Span meters	Load lbs/ft	Load kg/m	Deflection Multiplier		Design Factors for Two Rails	
34 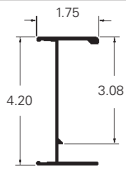	NEMA: 20B, 16C	10	3.0	320	476	0.005	0.077		
	CSA: E-6m	12	3.7	222	331	0.009	0.160	Area=1.82 in^2	Area=11.74 cm^2
		14	4.3	163	243	0.017	0.296	Sx=2.10 in^3	Sx=34.41 cm^3
	UL Cross-Sectional	16	4.9	125	186	0.030	0.505	Ix=4.98 in^4	Ix=207.28 cm^4
	Area: 1.50 in^2	18	5.5	99	147	0.047	0.810		
		20	6.1	80	119	0.072	1.234		

When ladders are used in continuous spans, the deflection of the tray is reduced by as much as 50%.
Design factors: Ix = Moment of Inertia, Sx = Section Modulus.

4" NEMA VE 1 Loading Depth
5" Side Rail Height

Straight Section Part Numbering

Prefix

Example: **25 A 09 - 24 - 144**

Series

25
35

Material

A = Aluminum

***Type**

Ladder-

06 = 6" rung spacing
09 = 9" rung spacing
12 = 12" rung spacing

Trough-

6" thru 36" wide

VT = Vented Trough
ST = Non-Ventilated Trough

***Width**

06 = 6"
09 = 9"
12 = 12"
18 = 18"
24 = 24"
30 = 30"
36 = 36"

Length

① **144** = 12 ft. ② 240 = 20 ft.	25
① **240** = 20 ft. ② 144 = 12 ft.	35

①Primary Length.
②Secondary Length.

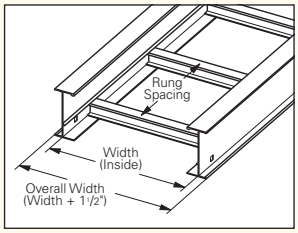

See page MIS-2 for additional rung options. *Special sizes available.

Ladder Type
(Specify Rung Spacing)

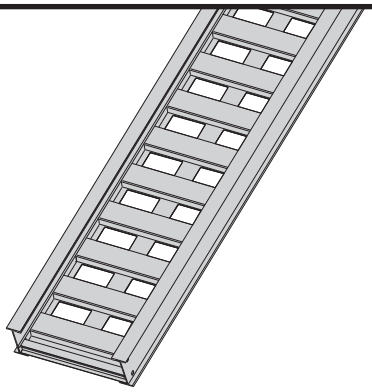

Ventilated Trough

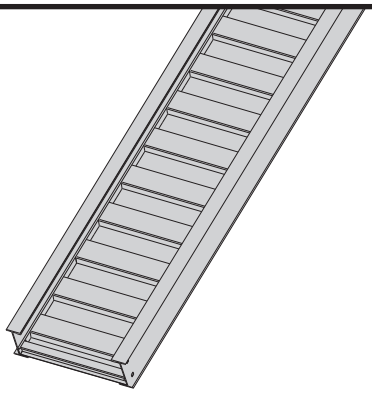

Non-Ventilated Trough

Aluminum

Dimensional & Loading Information

4" NEMA VE 1 Loading Depth
5" Side Rail Height

Values are based on simple beam tests per NEMA VE 1 on 36" wide cable ladder with rungs spaced on 12" centers. Cable ladders will support without collapse a 200 lb. (90.7 kg) concentrated load over and above published loads. Published load safety factor is 1.5. To convert 1.5 safety factor to 2.0, multiply published load by 0.75. To obtain mid-span deflection, multiply a load by the deflection multiplier. Cable ladder must be supported on spans shorter than or equal to the length of the cable ladder being installed.

Individual rungs will support without collapse a 200 lb. (90.7 kg) concentrated load applied at the mid-span of the rung, over and above the NEMA rated cable load with a 1.5 safety factor for highlighted NEMA spans and loads.

B-Line Series & Side Rail Dimensions	NEMA, CSA & UL Classifications	Span ft	Span meters	Load lbs/ft	Load kg/m	Deflection Multiplier		Design Factors for Two Rails	
25 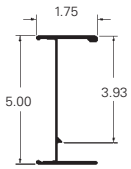	NEMA: 20A, 12C CSA: D1-6m UL Cross-Sectional Area: 1.00 in²	10	3.0	200	298	0.0049	0.083		
		12	3.7	139	207	0.010	0.172	Area=1.24 in²	Area=8.00 cm²
		14	4.3	102	152	0.019	0.319	Sx=1.80 in³	Sx=29.50 cm³
		16	4.9	78	116	0.032	0.545	Ix=4.62 in⁴	Ix=192.30 cm⁴
		18	5.5	62	92	0.051	0.873		
		20	6.1	50	74	0.078	1.330		

When ladders are used in continuous spans, the deflection of the ladder is reduced by as much as 50%.
Design factors: Ix = Moment of Inertia, Sx = Section Modulus.

B-Line Series & Side Rail Dimensions	NEMA, CSA & UL Classifications	Span ft	Span meters	Load lbs/ft	Load kg/m	Deflection Multiplier		Design Factors for Two Rails	
35 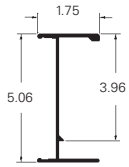	NEMA: 20B, 16C CSA: E-3m UL Cross-Sectional Area: 1.50 in²	10	3.0	310	461	0.0035	0.060		
		12	3.7	215	320	0.0073	0.125	Area=1.67 in²	Area=10.77 cm²
		14	4.3	158	235	0.014	0.232	Sx=2.35 in³	Sx=38.51 cm³
		16	4.9	121	180	0.023	0.395	Ix=6.37 in⁴	Ix=265.14 cm⁴
		18	5.5	96	142	0.037	0.633		
		20	6.1	77	115	0.057	0.965		

When ladders are used in continuous spans, the deflection of the ladder is reduced by as much as 50%.
Design factors: Ix = Moment of Inertia, Sx = Section Modulus.

5" NEMA VE 1 Loading Depth
6" Side Rail Height

Straight Section Part Numbering

Prefix

Example: **26 A 09 - 24 - 144**

Series	Material	*Type	*Width	Length	
26	**A** = Aluminum	**Ladder-** **06** = 6" rung spacing **09** = 9" rung spacing **12** = 12" rung spacing	**06** = 6" **09** = 9" **12** = 12" **18** = 18" **24** = 24" **30** = 30" **36** = 36"	① **144** = 12 ft. ② 240 = 20 ft.	26
36				① **240** = 20 ft. ② 144 = 12 ft.	36
46				① **240** = 20 ft. ② 288 = 24 ft.	46
H46†		**Trough-** 6" thru 36" wide **VT** = Vented Trough **ST** = Non-Ventilated Trough		① **240** = 20 ft. ② 300 = 25 ft.	H46

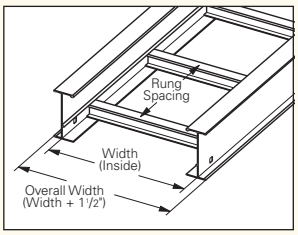

† H46A only available in ladder type 9" and 12" rung spacing.

①Primary Length.
②Secondary Length.

See page MIS-2 for additional rung options. *Special sizes available.

Ladder Type
(Specify Rung Spacing)

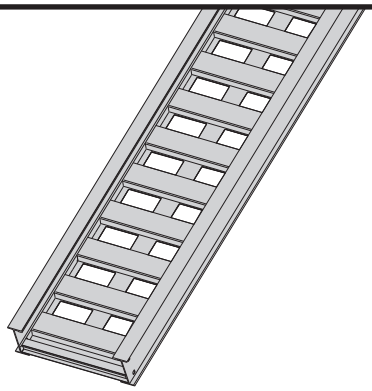

Ventilated Trough

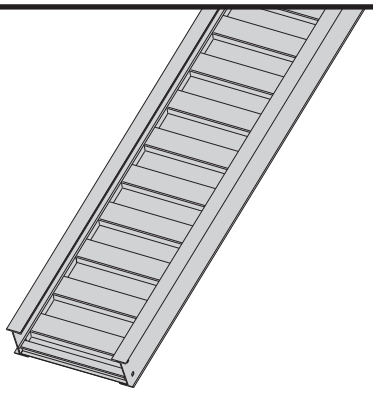

Non-Ventilated Trough

Dimensional & Loading Information

5" NEMA VE 1 Loading Depth
6" Side Rail Height

Values are based on simple beam tests per NEMA VE 1 on 36" wide cable ladder with rungs spaced on 12" centers. Cable ladders will support, without collapse, a 200 lb. (90.7 kg) concentrated load over and above published loads. Published load safety factor is 1.5. To convert 1.5 safety factor to 2.0, multiply the published load by 0.75. To obtain mid-span deflection, multiply a load by the deflection multiplier. Cable ladder must be supported on spans shorter than or equal to the length of the cable ladder being installed.

Individual rungs will support without collapse a 200 lb. (90.7 kg) concentrated load applied at the mid-span of the rung, over and above the NEMA rated cable load with a 1.5 safety factor for highlighted NEMA spans and loads.

B-Line Series & Side Rail Dimensions	NEMA, CSA & UL Classifications	Span ft	Span meters	Load lbs/ft	Load kg/m	Deflection Multiplier		Design Factors for Two Rails	
26 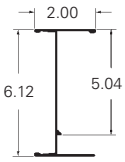	NEMA: 20A, 20B CSA: D1-6m UL Cross-Sectional Area: 1.00 in²	10	3.0	204	304	0.0028	0.049	Area=1.41 in²	Area=9.10 cm²
		12	3.7	142	211	0.006	0.101	Sx=2.53 in³	Sx=41.46 cm³
		14	4.3	104	155	0.011	0.186	Ix=7.915 in⁴	Ix=329.45 cm⁴
		16	4.9	80	119	0.019	0.318		
		18	5.5	63	94	0.030	0.509		
		20	6.1	51	76	0.045	0.776		

B-Line Series & Side Rail Dimensions	NEMA, CSA & UL Classifications	Span ft	Span meters	Load lbs/ft	Load kg/m	Deflection Multiplier		Design Factors for Two Rails	
36 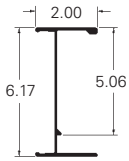	NEMA: 16C CSA: E-6m UL Cross-Sectional Area: 1.50 in²	12	3.7	233	347	0.0043	0.073	Area=1.81 in²	Area=11.68 cm²
		14	4.3	171	255	0.008	0.136	Sx=3.36 in³	Sx=55.06 cm³
		16	4.9	131	195	0.014	0.232	Ix=10.85 in⁴	Ix=451.61 cm⁴
		18	5.5	104	154	0.022	0.372		
		20	6.1	84	125	0.033	0.566		
		22	6.7	69	103	0.049	0.829		

B-Line Series & Side Rail Dimensions	NEMA, CSA & UL Classifications	Span ft	Span meters	Load lbs/ft	Load kg/m	Deflection Multiplier		Design Factors for Two Rails	
46 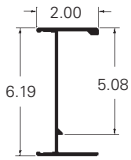	NEMA: 20C CSA: E-6m UL Cross-Sectional Area: 1.50 in²	14	4.3	210	313	0.0071	0.121	Area=2.06 in²	Area=13.29 cm²
		16	4.9	161	239	0.012	0.207	Sx=3.59 in³	Sx=58.83 cm³
		18	5.5	127	189	0.019	0.331	Ix=12.18 in⁴	Ix=506.97 cm⁴
		20	6.1	103	153	0.030	0.505		
		22	6.7	85	127	0.043	0.739		
		24	7.3	72	106	0.061	1.046		

B-Line Series & Side Rail Dimensions	NEMA, CSA & UL Classifications	Span ft	Span meters	Load lbs/ft	Load kg/m	Deflection Multiplier		Design Factors for Two Rails	
H46 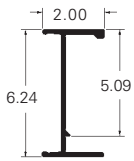	NEMA: 20C+ CSA: 131 kg/m 7.6m UL Cross-Sectional Area: 2.00 in²	16	4.9	261	388	0.0085	0.145	Area=2.95 in²	Area=19.03 cm²
		18	5.5	206	307	0.014	0.233	Sx=5.33 in³	Sx=87.34 cm³
		20	6.1	167	248	0.021	0.355	Ix=17.30 in⁴	Ix=720.08 cm⁴
		22	6.7	138	205	0.030	0.520		
		23	7.3	116	173	0.043	0.737		
		25	7.6	88	131	0.051	0.867		

When ladders are used in continuous spans, the deflection of the ladder is reduced by as much as 50%.
Design factors: Ix = Moment of Inertia, Sx = Section Modulus.

6" NEMA VE 1 Loading Depth
7" Side Rail Height

Straight Section Part Numbering

Prefix

Example: **37 A 09 - 24 - 240**

Series	Material	*Type	*Width	Length
37	**A** = Aluminum	**Ladder-** **06** = 6" rung spacing **09** = 9" rung spacing **12** = 12" rung spacing	**06** = 6" **09** = 9" **12** = 12" **18** = 18" **24** = 24" **30** = 30" **36** = 36"	① **240** = 20 ft. ② 144 = 12 ft. — 37
47				① **240** = 20 ft. ② 288 = 24 ft. — 47
H47†				① **240** = 20 ft. ② 300 = 25 ft. — H47
57†				① **360** = 30 ft. ② 300 = 25 ft. — 57

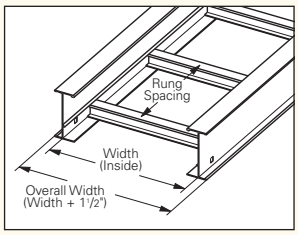

Trough-
6" thru 36" wide
VT = Vented Trough
ST = Non-Ventilated Trough

† H47A & 57A only available in ladder type 9" and 12" rung spacing.

①Primary Length.
②Secondary Length.

See page MIS-2 for additional rung options. *Special sizes available.

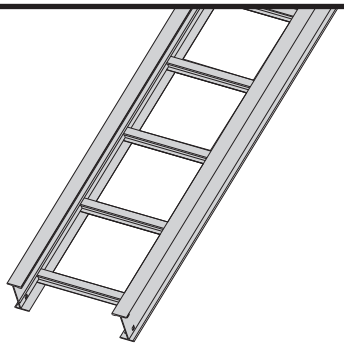

Ladder Type
(Specify Rung Spacing)

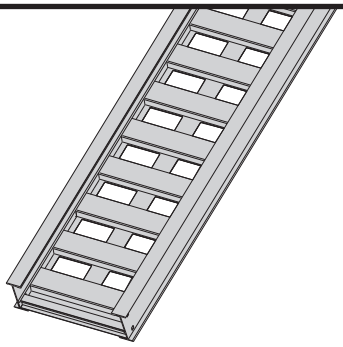

Ventilated Trough

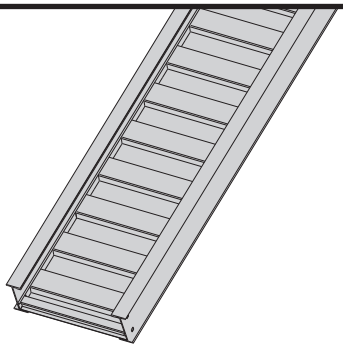

Non-Ventilated Trough

57A available in
(9" & 12" rung spacing in
12" to 36" widths)

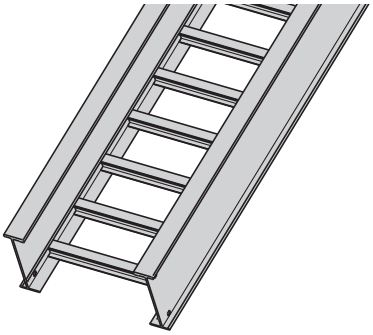

Aluminum

Dimensional & Loading Information

6" NEMA VE 1 Loading Depth
7" Side Rail Height

Values are based on simple beam tests per NEMA VE 1 on 36" wide cable ladder with rungs spaced on 12" centers. Cable ladders will support without collapse a 200 lb. (90.7 kg) concentrated load over and above published loads. Published load safety factor is 1.5. To convert 1.5 safety factor to 2.0, multiply the published load by 0.75. To obtain mid-span deflection, multiply a load by the deflection multiplier. Cable ladder must be supported on spans shorter than or equal to the length of the cable ladder being installed.

Individual rungs will support without collapse a 200 lb. (90.7 kg) concentrated load applied at the mid-span of the rung, over and above the NEMA rated cable load with a 1.5 safety factor for highlighted NEMA spans and loads.

B-Line Series & Side Rail Dimensions	NEMA, CSA & UL Classifications	Span ft	Span meters	Load lbs/ft	Load kg/m	Deflection Multiplier		Design Factors for Two Rails	
37 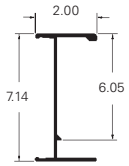	NEMA: 20B, 16C	12	3.7	222	331	0.0035	0.059		
	CSA: 106 kg/m 6.1m	14	4.3	163	243	0.0064	0.109	Area=1.81 in²	Area=11.68 cm²
		16	4.9	125	186	0.011	0.186	Sx=3.77 in³	Sx=61.78 cm³
	UL Cross-Sectional	18	5.5	99	147	0.017	0.299	Ix=13.50 in⁴	Ix=561.91 cm⁴
	Area: 1.50 in²	20	6.1	80	119	0.027	0.455		
		22	6.7	66	98	0.039	0.666		

B-Line Series & Side Rail Dimensions	NEMA, CSA & UL Classifications	Span ft	Span meters	Load lbs/ft	Load kg/m	Deflection Multiplier		Design Factors for Two Rails	
47 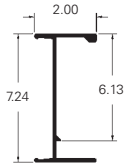	NEMA: 20C	14	4.3	204	304	0.0048	0.083		
	CSA: 142 kg/m 6.1m	16	4.9	156	233	0.0082	0.141	Area=2.38 in²	Area=15.35 cm²
		18	5.5	123	184	0.0132	0.225	Sx=4.94 in³	Sx=80.95 cm³
	UL Cross-Sectional	20	6.1	100	149	0.0201	0.344	Ix=17.88 in⁴	Ix=744.22 cm⁴
	Area: 2.00 in²	22	6.7	83	123	0.0295	0.503		
		24	7.3	69	103	0.0418	0.713		

B-Line Series & Side Rail Dimensions	NEMA, CSA & UL Classifications	Span ft	Span meters	Load lbs/ft	Load kg/m	Deflection Multiplier		Design Factors for Two Rails	
H47 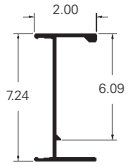	NEMA: 20C+	16	4.9	233	346	0.110	0.0064		
	CSA: 241 kg/m 6.1m	18	5.5	184	274	0.010	0.176	Area=3.04 in²	Area=19.61 cm²
		20	6.1	149	222	0.016	0.268	Sx=6.10 in³	Sx=99.96 cm³
	UL Cross-Sectional	22	6.7	123	183	0.023	0.393	Ix=22.91 in⁴	Ix=953.59 cm⁴
	Area: 2.00 in²	24	7.3	103	154	0.033	0.556		
		25	7.6	95	142	0.038	0.655		

B-Line Series & Side Rail Dimensions	NEMA, CSA & UL Classifications	Span ft	Span meters	Load lbs/ft	Load kg/m	Deflection Multiplier		Design Factors for Two Rails	
57 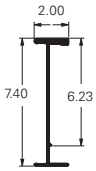	NEMA: 20C+	20	6.1	232	345	0.011	0.187		
	CSA: 152 kg/m 9.1m	22	6.7	192	285	0.016	0.274	Area=4.22 in²	Area=27.23 cm²
		24	7.3	161	240	0.023	0.388	Sx=7.73 in³	Sx=126.67 cm³
	UL Cross-Sectional	26	7.9	136	202	0.031	0.534	Ix=32.86 in⁴	Ix=1367.74 cm⁴
	Area: 2.00 in²	28	8.5	117	174	0.042	0.718		
		30	9.1	102	152	0.055	0.947		

When ladders are used in continuous spans, the deflection of the ladder is reduced by as much as 50%.
Design factors: Ix = Moment of Inertia, Sx = Section Modulus.

Wedge Lock Splice Plates
(Excluding H46, H47 & 57 Series)

- Standard 4-hole pattern (except 9A-1007).
- Furnished in pairs, with hardware.
- One pair including hardware provided with each section.
- Boxed in pairs with hardware.
- For field installation drill 13/32" hole.

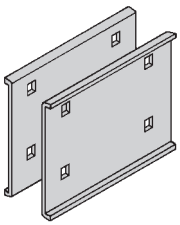

Catalog No.	Height in.	Height mm
9A-1004	4	101
9A-1005	5	127
9A-1006	6	152
9A-1007	7	178

H46A, H47A and 57A Mid-Span Splice

- Standard for H46A, H47A and 57A straight sections.
- Six bolt design 1/2" Stainless Steel Type 316 hardware standard.
- Available on ladder bottoms only. 09 and 12" rung spacing.

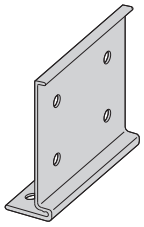

Catalog No.	Ladder Series
9A-6006	H46A
9A-6007	H47A, 57A

Expansion Splice Plates

- Expansion plates allow for one inch expansion or contraction of the cable ladder, or where expansion joints occur in the supporting structure.
- Furnished in pairs with hardware.
- **Bonding Jumpers are required on each siderail. Order Separately.**

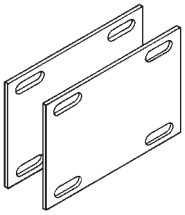

Catalog No.	Height in.	Height mm
9A-1014	4	101
9A-1015	5	127
9A-1016	6	152
9A-1017	7	178

Universal Splice Plates

- Used to splice to existing cable ladder systems.
- Furnished in pairs with hardware.

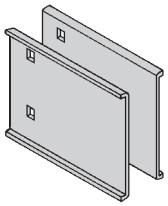

Catalog No.	Height in.	Height mm
9A-1004-1/2	4	101
9A-1005-1/2	5	127
9A-1006-1/2	6	152
9A-1007-1/2	7	178

Step Down Splice Plates

- These splice plates are offered for connecting cable ladder sections having side rails of different heights.
- Furnished in pairs with hardware.

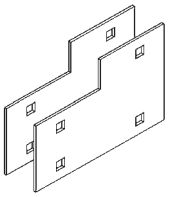

Catalog No.	Height in.	Height mm
9A-1045	5 to 4	127 to 101
9A-1046	6 to 4	152 to 101
9A-1060	6 to 5	152 to 127
9A-1047	7 to 4	178 to 101
9A-1061	7 to 5	178 to 127
9A-1062	7 to 6	178 to 152

Vertical Adjustable Splice Plates

- These plates provide for changes in elevation that do not conform to standard vertical fittings.
- Furnished in pairs with hardware.
- **Bonding Jumper not required.**

Requires supports within 24" on both sides, per NEMA VE 2.

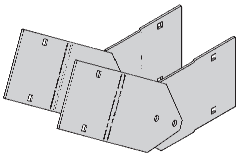

Catalog No.	Height in.	Height mm
9A-1024	4	101
9A-1025	5	127
9A-1026	6	152
9A-1027	7	178

Horizontal Adjustable Splice Plates

- Offered to adjust a cable ladder run for changes in direction in a horizontal plane that do not conform to standard horizontal fittings.
- Furnished in pairs with hardware.
- New design bonding jumpers **not** required.
- (X) Insert 4, 5, 6 or 7 for side rail height.

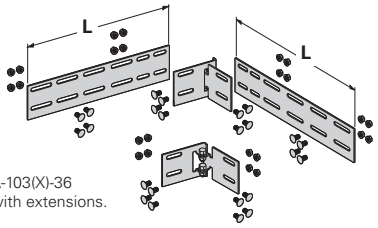

9A-103(X)-12 or 9A-103(X)-36
One pair splice plates with extensions.

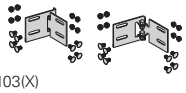

9A-103(X)
Splice only

Requires supports within 24" on both sides, per NEMA VE 2.

Catalog No.	Ladder End Cut	Ladder Width	'L'
9A-103(X)	Mitered	Thru 36"	N/A
9A-103(X)-12	Not Mitered	Thru 12"	16"
9A-103(X)-36	Not Mitered	Thru 36"	41"

Branch Pivot Connectors

- Branch from existing cable ladder runs at any point.
- Pivot to any required angle.
- UL Classified for grounding (bonding jumper not required).
- Furnished in pairs with hardware.

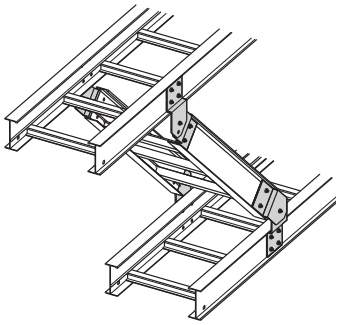

Catalog No.	Height in.	Height mm
9A-2044	4	101
9A-2045	5	127
9A-2046	6	152
9A-2047	7	178

Cross Connector Bracket

- For field connecting crossing section.
- Furnished in pairs with 3/8" hardware.

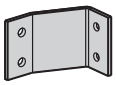

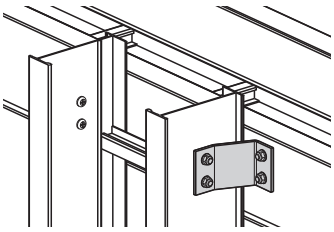

Catalog No.
9A-1240

Offset Reducing Splice Plate

- This plate is used for joining cable ladders having different widths. When used in pairs they form a straight reduction; when used with standard splice plate, they form an offset reduction.
- Furnished as one plate with hardware.
- (‡) Insert reduction

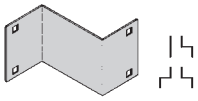

Catalog No.	Height in.	Height mm
9A-1064-(‡)	4	101
9A-1065-(‡)	5	127
9A-1066-(‡)	6	152
9A-1067-(‡)	7	178

Ladder Hardware - For field installation drill 13/32" hole.

Standard Ladder Hardware

Finish: Zinc Plated ASTM B633, SC1

Square Neck Carriage Bolt
ASTM A307 Grade A

Catalog No.
SNCB 3/8" x 3/4" Znplt

Serrated Flange Hex Nut
ASTM A563 Grade A

Catalog No.
SFHN 3/8"-16 Znplt

Optional Ladder Hardware

Square Neck Carriage Bolt
AISI 316 Stainless Steel

Catalog No.
SNCB 3/8" x 3/4" SS6

Serrated Flange Hex Nut
AISI 316 Stainless Steel

Catalog No.
SFHN 3/8"-16 SS6

To order optional 316 Stainless Steel hardware add SS6 suffix to part number

Example: 9A-1004SS6

Ladder to Box Splice Plates

- Used to attach the end of a cable ladder run to a distribution box or control panel.
- Furnished in pairs with hardware.

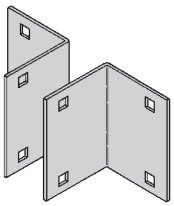

Catalog No.	Height in.	Height mm
9A-1054	4	101
9A-1055	5	127
9A-1056	6	152
9A-1057	7	178

Frame Type Box Connector

- Designed to attach the end of a cable ladder run to a distribution cabinet or control center to help reinforce the box at the point of entry.
- Furnished with ladder connection hardware.
- (‡) Insert ladder width

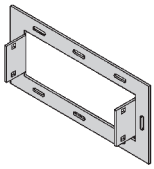

Catalog No.	Height in.	Height mm
9A-1074-(‡)	4	101
9A-1075-(‡)	5	127
9A-1076-(‡)	6	152
9A-1077-(‡)	7	178

Blind End

- This plate forms a closure for a dead end cable ladder.
- Furnished as one plate with hardware.
- (‡) Insert ladder width

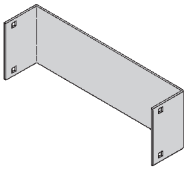

Catalog No.	Height in.	Height mm
9A-1084-(‡)	4	101
9A-1085-(‡)	5	127
9A-1086-(‡)	6	152
9A-1087-(‡)	7	178

Conduit to Cable Ladder Adaptor

- Assembly required.
- Mounting hardware included.
- Conduit clamps provided.
- (‡) = Conduit size (1/2" thru 4").

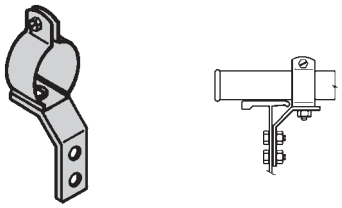

Catalog No.
9ZN-1150-(‡)

Conduit to Cable Ladder Adaptor

- Assembly required.
- Conduit clamp included.
- (‡) = Conduit size (1/2" thru 4").

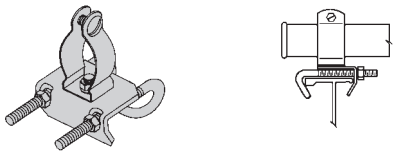

Catalog No.
9ZN-1155-(‡)

Cable Tie (Ladder Ladder)

- Nylon ties provide easy attachment of cable to ladder rungs; maximum cable O.D. is 3" (76mm).

Overall Length 15"

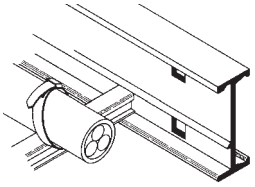

Catalog No.
99-2125-15

Conduit to Cable Ladder Adaptor

- For easy attachment of conduit terminating at a cable ladder.
- Use on aluminum or steel cable ladders.

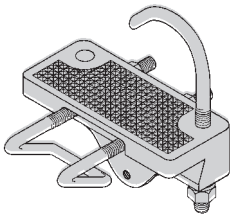

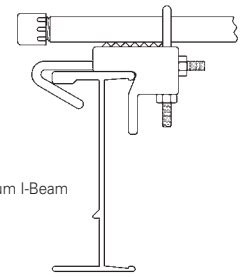

Aluminum I-Beam

Catalog No.	Conduit Size in.	Conduit Size mm
9G-1158-1/2, 3/4	1/2, 3/4	15, 20
9G-1158-1, 1 1/4	1, 1 1/4	25, 32
9G-1158-1 1/2, 2	1 1/2, 2	40, 50
9G-1158-2 1/2, 3	2 1/2, 3	65, 80
9G-1158-3 1/2, 4	3 1/2, 4	90, 100

Ladder Drop-Out

- Specially-designed Ladder Drop-Outs provide a rounded surface with 4" (101 mm) radius to protect cable as it exits from the cable ladder, preventing damage to insulation. The drop-out will attach to any desired rung.
- (‡) Insert ladder width

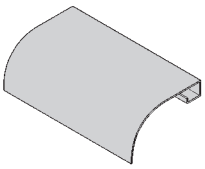

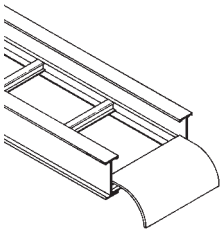

Catalog No.
9A-1104-(‡)

Trough Drop-Out & Drop-Out Bushing

- These devices provide a rounded surface to protect cable as it exits from the trough-type cable ladder.
- Hardware is included for attachment of the trough bottom drop-out.
- (‡) Insert ladder width

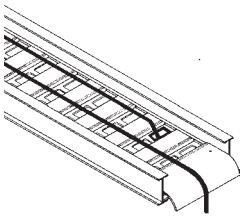

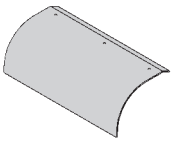

Catalog No.
9A-1104T-(‡)

Trough-Type Drop-Out

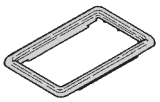

Catalog No.
99-1124

Snap-In Plastic Bushing

Straight Section Barriers

- Standard length: 120" (3 m) 144" (12 ft.).
- Order catalog number based on loading depth.
- Furnished with four #10 x 1/2" plated self-drilling screws and a 99-9982 splice.

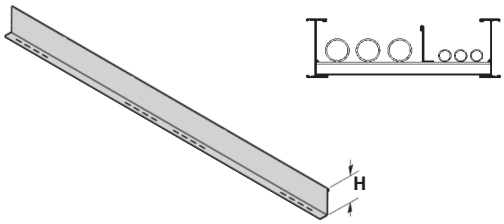

Length = 144 for 12' or 120 for 10'

Catalog No.	Side Rail Height in.	Side Rail Height mm	Loading Depth 'H' in.	Loading Depth 'H' mm
73A-Length	4	101	3	76
74A-Length	5	127	4	101
75A-Length	6	152	5	127
76A-Length	7	178	6	152

Horizontal Bend Barriers

- Horizontal Bend Barriers are flexible in order to conform to any horizontal fitting radius. Cut to length.
- Order catalog number based on loading depth.
- Furnished with three #10 x 1/2" zinc plated self-drilling screws and a 99-9982 Barrier Strip Splice.
- Standard length is 72" (6 ft.), sold individually.

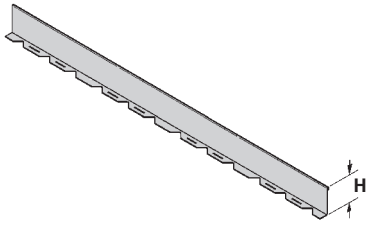

Catalog No.	Side Rail Height in.	Side Rail Height mm	Loading Depth 'H' in.	Loading Depth 'H' mm
73A-90HBFL	4	101	3	76
74A-90HBFL	5	127	4	101
75A-90HBFL	6	152	5	127
76A-90HBFL	7	178	6	152

Vertical Bend Barriers

- Vertical Bend Barriers are preformed to conform to a specific vertical fitting.
- Furnished with three #10 x 1/2" plated self-drilling screws and a 99-9982 Barrier Strip Splice.
- (*) Insert 30, 45, 60 or 90 for degrees
- (†) Insert 12, 24, 36 or 48 for radius

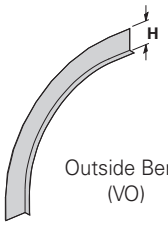

Outside Bend (VO)

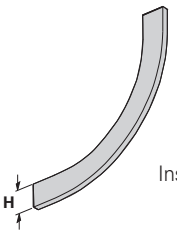

Inside Bend (VI)

Inside Bend Catalog No.	Outside Bend Catalog No.	Side Rail Height in.	Side Rail Height mm	Loading Depth 'H' in.	Loading Depth 'H' mm
73A-(*)VI(†)	**73A-(*)VO(†)**	4	101	3	76
74A-(*)VI(†)	**74A-(*)VO(†)**	5	127	4	101
75A-(*)VI(†)	**75A-(*)VO(†)**	6	152	5	127
76A-(*)VI(†)	**76A-(*)VO(†)**	7	178	6	152

Barrier Strip Clip

- Zinc plated steel barrier clip fastens to either aluminum or steel ladder rung.
- Furnished with one #10 x 1/2" zinc plated self-drilling screw.

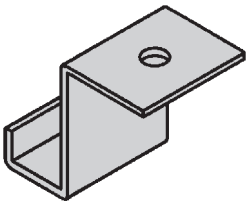

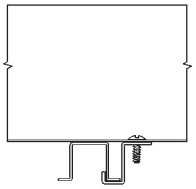

Catalog No.
9ZN-9002

Barrier Strip Splice

- Plastic splice holds adjoining barrier strips in straight alignment.

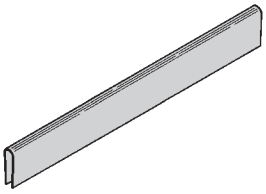

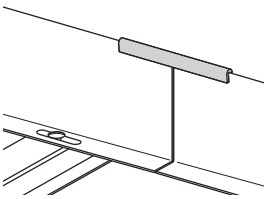

Catalog No.
99-9982

Aluminum

Stainless Steel Cable Clamp "P"

- Fits with series 2, 3, & 4 rungs.
- Attaches to rung at any point.
- 14 gauge Type 316 stainless steel material to minimize corrosion and induction heating.
- Plated steel and aluminum also available.

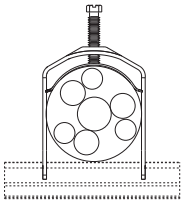

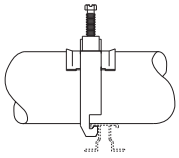

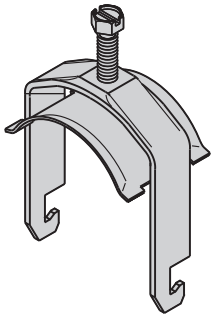

Refer Cable Fixing Section

Catalog No.	Cable Size in.	Cable Size mm
BP081SS	.250 - .840	6.4 - 21.3
BP110SS	.810 - 1.100	20.6 - 28.0
BP135SS	.850 - 1.350	21.6 - 34.8
BP175SS	1.250 - 1.750	31.8 - 44.5
BP205SS	1.550 - 2.050	39.4 - 52.1
BP250SS	2.000 - 2.500	50.8 - 63.5
BP300SS	2.500 - 3.000	63.5 - 76.2
BP325SS	2.750 - 3.250	69.9 - 82.6
BP375SS	3.250 - 3.750	82.6 - 95.3
BP425SS	3.750 - 4.250	95.3 - 108.0
BP475SS	4.250 - 4.750	108.0 - 120.7

Bonding Jumper

Use at each expansion splice and where the cable ladder is not mechanically/electrically continuous to ground. Sold individually.

- Hardware included.
- See table 392.7(B)(2) on page CLS-9 for amperage ratings required to match the UL cross-sectional area of the ladder.
- See ladder loading chart for UL cross-sectional area.
- Bonding jumper is 16" long.

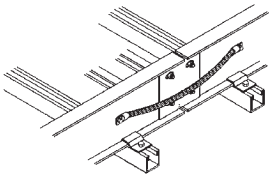

Catalog No.	Cross-Sectional Area	Ampacity
99-N1	0.40 Square inches	600
99-40	1.5 Square inches	1600
99-1620	2.0 Square inches	2000

Grounding Clamp

B-Line Cable Ladder is UL® classified as to its suitability as an equipment grounding conductor. If a separate conductor for additional grounding capability is desired, B-Line offers this clamp for bolting the conductor at least once to each cable ladder section.

- Accepts #6 AWG to 250 MCM.

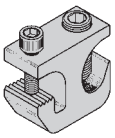

Catalog No.	Material
9A-2130	Tin Plated Aluminum

Ground Clamp

- Mechanically attaches grounding cables to cable ladder.
- Hardware included.
- (*) Insert ZN or SS4

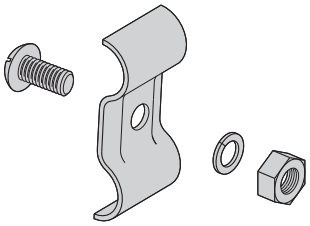

Catalog No.	Cable Size
9(*)-2351	#1 thru 2/0
9(*)-2352	3/0 thru 250 MCM

Hanger Rod Clamp

- For 1/2" ATR.
- Furnished in pairs.
- Order ATR and hex nuts separately.
- Two-piece "J"-hanger design.
- 1500 lbs./pair capacity safety factor 3.
- (*) Insert ZN or G

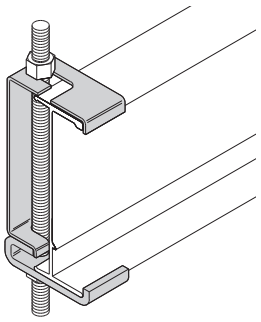

Catalog No.	Rail Height in.	Rail Height mm
9(*)-5324	4	101
9(*)-5325	5	127
9(*)-5326	6	152
9(*)-5327	7	178

Threaded Rod (ATR)

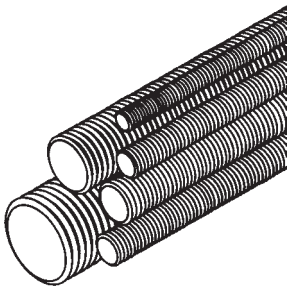

Loading based on safety factor 5.
Standard Finish: Zinc plated

Size	Loading lbs	Catalog No.	Available Lengths
3/8"-16	730	**ATR 3/8" x Length**	36", 72", 120", 144"
1/2"-13	1350	**ATR 1/2" x Length**	36", 72", 120", 144"

Threaded Rod Coupling

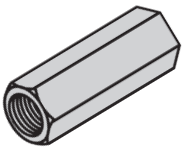

Loading based on safety factor 5.
Standard Finish: Zinc plated

Size	Loading lbs	Catalog No.
3/8"-16	730	**B655-3/8**
1/2"-13	1350	**B655-1/2**

Cable Ladder Clamp/Guide

- Features a no-twist design.
- Has four times the strength of the traditional design.
- Each side is labeled to ensure proper installation.
- Furnished in pairs, with or without hardware.

Patent # RE35479

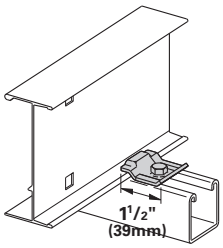

9ZN-1204 shown.
Installed as a guide.

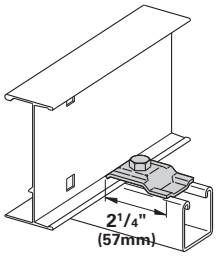

9ZN-1208 shown.
Installed as a clamp.

Note: For heavy duty or vertical applications see 9(*)-1241 or 9(*)-1242 page AL-43

Catalog No. Without Hardware	Catalog No. With Hardware	Overall Length in.	Overall Length mm	Hardware Size	Finish
9ZN-1204	**9ZN-1204NB**	1 1/2	38	1/4"	Znplt
9ZN-1208	**9ZN-1208NB**	2 1/4	57	3/8"	Znplt
9A-1205	**9A-1205NB**	2 1/4	57	1/2"	Alum.
9G-1205	**9G-1205NB**	2 1/4	57	1/2"	HDGAF
9SS6-1205	**9SS6-1205NB**	2 1/4	57	1/2"	316SS
9ZN-1205	**9ZN-1205NB**	2 1/4	57	1/2"	Znplt

Isolator Pad

- Use as a friction reducer and/or as a dissimilar metal isolator barrier.
- UV resistant HDPE.
- Temperature range: -100 to 160° F.
- Designed to use with 9(*)-1205 or 9(*)-1208 clamp/guide.

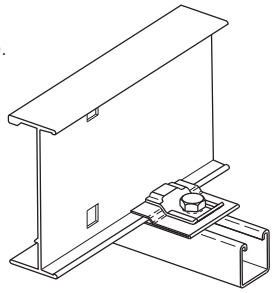

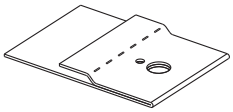

Isolation pad shown as when used with a guide.

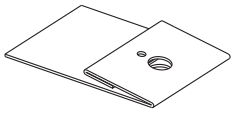

Isolation pad shown with top flange doubled under for clamp application.

Catalog No.
99-PE34

Aluminum

Cable Ladder Clamp

- Hold-down clamps for single or double cable ladder runs.
- No drilling of support I-beam or channel is required.
- Sold in pieces - two clamps are required per ladder.
- Maximum beam flange thickness 1 1/8" (28.58 mm).

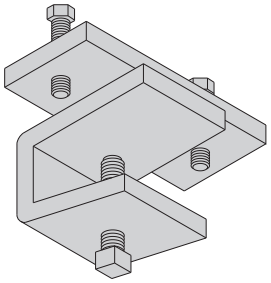

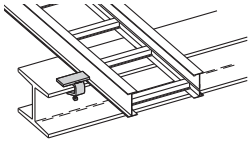

Catalog No.	Finish
9ZN-1249HD	Znplt
9G-1249HD	HDGAF

Cable Ladder Guide

- Expansion guide for single or double cable ladder runs.
- Guide allows for longitudinal movement of the cable ladder.
- No field drilling of support I-beam or channel is required.
- Guides are required on both sides of cable ladder to prevent lateral movement - can be placed on either the inside or outside flange of cable ladder.
- Guides are sold in pieces - two guides are required per ladder.
- Maximum flange thickness 1 1/8" (28.58 mm).

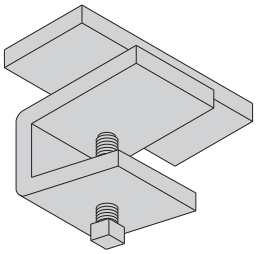

Catalog No.	Finish
9ZN-1249	Znplt
9G-1249	HDGAF

Nylon Pad

- Use for friction reduction.
- Hardness: Shore D80.
- Low friction coefficient.
- UV resistant.
- Excellent weatherability.
- UL - 94HB.

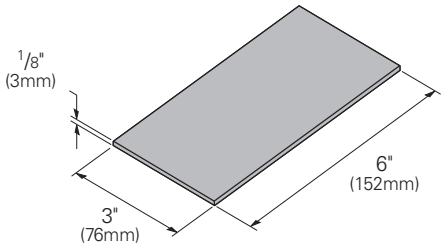

Catalog No.
99-PE36

Neoprene Roll

- Use for material isolation.
- 1/8" x 2" x 25' roll.
- Hardness: Shore A60.
- Good weatherability.

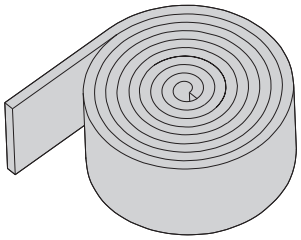

Catalog No.
99-NP300

Center Hung Ladder Support

- Allows cable to be laid-in from both sides.
- Eliminates costly cable pulling and field cutting of cable ladder supports. Labor costs are dramatically reduced.
- Required hardware and threaded rod material for trapeze assemblies are reduced by 50%.
- Designed for use with 1/2" threaded rod. (Order rod separately)
- Use with all aluminum and steel cable ladders through 24" width.
- Load capacity is 700 lbs. per support. Safety factor of 3.0. Eccentric loading is not to exceed a 60% vs. 40% load differential.
- Maximum recommended unsupported span length is 144"/12 ft. (3.66 m).
- Hardware shown is furnished.

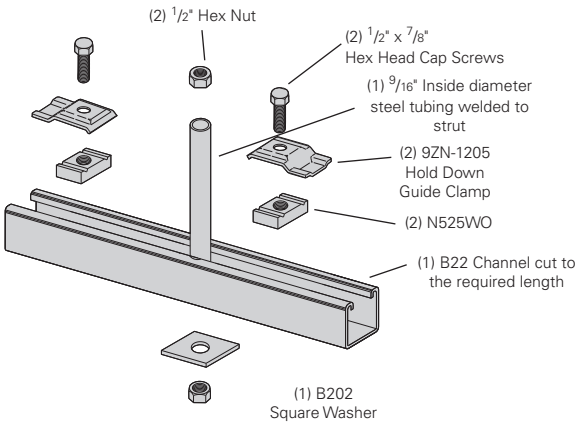

ZN = Zinc Plated

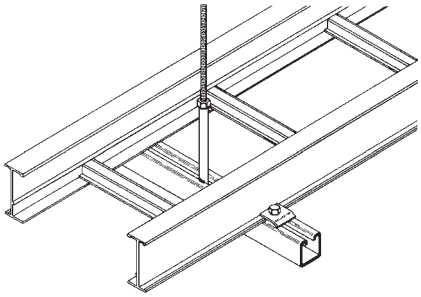

Catalog No.	Ladder Width	Channel Length
9ZN-5212	6", 9", 12"	18"
9ZN-5224	18", 24"	30"

Center Hung Support Hardware Kit

- Kits packaged in plastic bags.

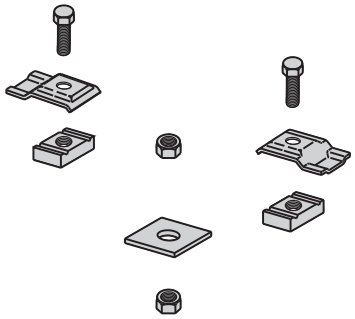

Catalog No.	Kit Contents
9ZN-5200	1 pr. 9ZN-1205 2 HHC Screw 1/2" x 7/8" ZN 2 N525 WO ZN 1 B202 ZN 1/2" sq washer 2 HN 1/2" ZN

Aluminum

Trapeze Support Kit

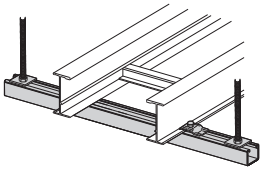

- Kits include the components required for a single trapeze support in one package. Available in pre-galvanized steel with zinc-plated hardware or hot dip galvanized steel with 316 stainless steel hardware.
- The SH channel provides the convenience of pre-punched slots, which eliminate the need for field drilling.
- The illustrated hardware is sealed in a plastic bag and boxed with the channel, which is pre-cut to the appropriate length as shown in the chart.
- Designed for use with 1/2" threaded rod. Order rod separately.

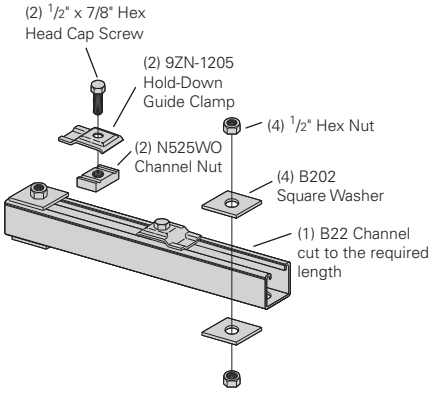

Catalog No.	Ladder Width		Channel Length		Uniform Load	
	in.	mm	in.	mm	lbs	kN
9P-5506-22SH(†)	6	152	16	406	1600	7.11
9P-5509-22SH(†)	9	229	18	457	1250	5.56
9P-5512-22SH(†)	12	305	22	559	1125	5.00
9P-5518-22SH(†)	18	457	28	711	865	3.85
9P-5524-22SH(†)	24	610	34	864	700	3.11
9P-5530-22SH(†)	30	762	40	1016	590	2.62
9P-5536-22SH(†)	36	914	46	1168	510	2.27
9P-5542-22SH(†)	42	1067	52	1321	450	2.00

- (†) Insert 3/8 for 3/8" threaded rod hardware.

Safety factor of 3.0 on all loads.

Heavy Duty Trapeze Support Kit

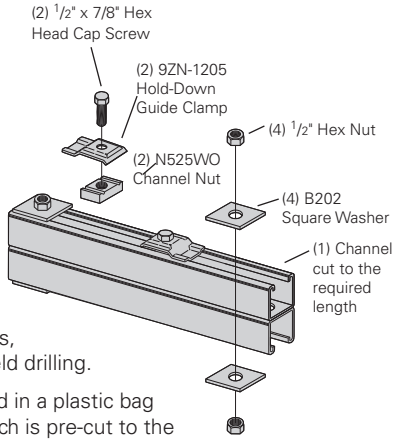

- Kits include the components required for a single trapeze support in one package.
- These kits are available in DURA-GREEN™ epoxy coated steel with zinc-plated hardware or hot dip galvanized steel with 316 stainless steel hardware.
- The SH channel provides the convenience of pre-punched slots, which eliminates the need for field drilling.
- The illustrated hardware is sealed in a plastic bag and boxed with the channel, which is pre-cut to the appropriate length as shown in the chart.
- Designed for use with 1/2" threaded rod. Order rod separately.

Catalog No.	Ladder Width		Channel Length		Uniform Load	
	in.	mm	in.	mm	lbs	kN
9(*)-5506-22SHA	6	152	16	406	1350	6.01
9(*)-5509-22SHA	9	229	18	457	1350	6.01
9(*)-5512-22SHA	12	305	22	559	1350	6.01
9(*)-5518-22SHA	18	457	28	711	1350	6.01
9(*)-5524-22SHA	24	610	34	864	1350	6.01
9(*)-5530-22SHA	30	762	40	1016	1350	6.01
9(*)-5536-22SHA	36	914	46	1168	1350	6.01
9(*)-5542-22SHA	42	1067	52	1321	1350	6.01

- (*) Insert GRN or G

Safety factor of 3.0 on all loads.

Trapeze Hardware Kit

- Kits packaged in plastic bags.

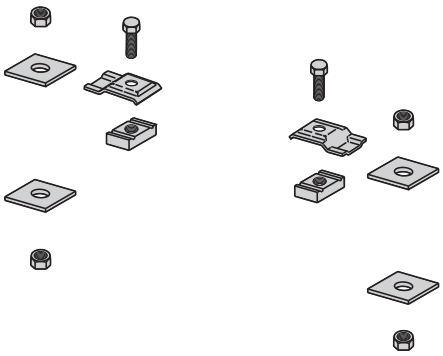

Catalog No.	Kit Contents
9ZN-5500-1/2	1 pr. 9ZN-1205 2 HHC Screw 1/2" x 7/8" ZN 2 N525 WO ZN 4 B202 ZN 1/2" sq washer 4 HN 1/2 ZN
9G-5500-1/2	1 pr. 9G-1205 2 HHC Screw 1/2" x 7/8" SS6 2 N525 WO SS6 4 B202 HDG 1/2" sq washer 4 HN 1/2 SS6

Bracket

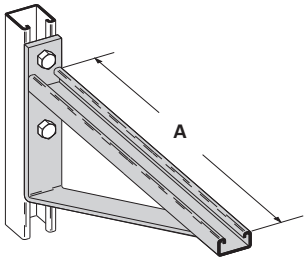

Finishes available: ZN, GRN or HDG
Safety Load Factor 2.5

Catalog No.	Uniform Load		Ladder Width		'A'	
	lbs	kN	in.	mm	in.	mm
B494-12	1580	7.02	6 & 9	152 & 229	12	305
B494-18	1000	4.45	12	305	18	457
B494-24	996	4.43	18	457	24	610

Bracket

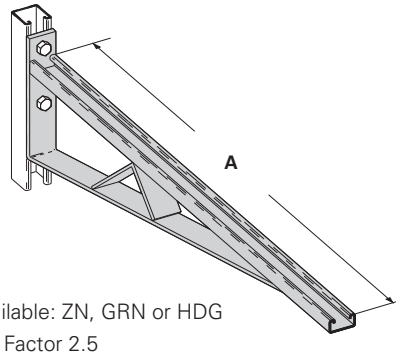

Finishes available: ZN, GRN or HDG
Safety Load Factor 2.5

Catalog No.	Uniform Load		Ladder Width		'A'	
	lbs	kN	in.	mm	in.	mm
B494-30	924	4.11	24	610	30	762
B494-36	864	3.84	30	762	36	914
B494-42	580	2.58	36	914	42	1067
B494-48	500	2.22	42	1067	48	1219

Cantilever Bracket

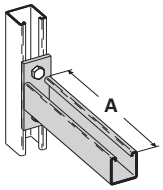

Finishes available: ZN, GRN, HDG, SS4 or SS6
Safety Load Factor 2.5

Catalog No.	Uniform Load		Ladder Width		'A'	
	lbs	kN	in.	mm	in.	mm
B409-12	960	4.27	6 & 9	152 & 229	12	305
B409-18	640	2.84	12	305	18	457
B409-24	480	2.13	18	457	24	610

Cantilever Bracket

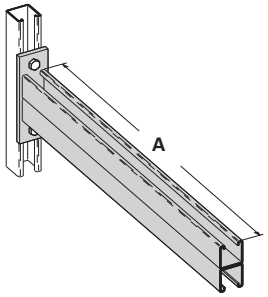

Finishes available: ZN, GRN, HDG, or SS4
Safety Load Factor 2.5

Catalog No.	Uniform Load		Ladder Width		'A'	
	lbs	kN	in.	mm	in.	mm
B297-12	1660	7.38	6 & 9	152 & 229	12	305
B297-18	1100	4.89	12	305	18	457
B297-24	835	3.71	18	457	24	610
B297-30	665	2.95	24	610	30	762
B297-36	550	2.44	30	762	36	914
B297-42	465	2.06	36	914	42	1067

Underfloor Support (U-Bolts not included)

U-Bolt Size	Fits Pipe O.D.
B501-3/4	.841 - 1.050
B501-1	1.051 - 1.315
B501-1 1/4	1.316 - 1.660
B501-1 1/2	1.661 - 1.900
B501-2	1.901 - 2.375
B501-2 1/2	2.376 - 2.875

- Order properly sized U-Bolts separately.

Finish available: ZN
Safety Load Factor 2.5

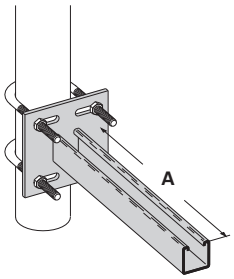

Catalog No.	Uniform Load		Ladder Width		'A'	
	lbs	kN	in.	mm	in.	mm
B409UF-12	800	3.55	6 & 9	152 & 229	12	305
B409UF-21	450	2.00	12 & 18	305 & 457	21	533

Vertical Hanger Splice Plates

- Design load is 1500 lbs/pair. Safety Factor of 2.5
- Furnished in pairs with hardware.

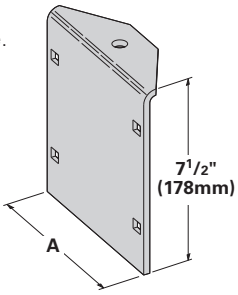

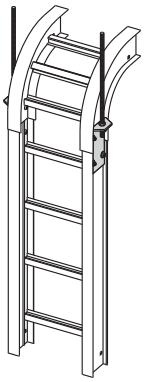

Catalog No.	Outside Ladder Ht.	'A' in.	'A' mm
9A-1224	4"	3.84	97.54
9A-1225	5"	4.73	120.14
9A-1226	6"	5.84	148.34
9A-1227	7"	6.84	173.74

Heavy Duty Hold Down Bracket

- Design load is 2000 lbs/pair.
- Two bolt design.
- Sold in pairs.
- 3/8" cable ladder attachment hardware provided.
- 1/2" support attachment hardware **not** provided.
- (*) Insert: ZN, SS4 or SS6

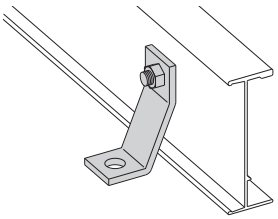

Catalog No.
9(*)-1241

Heavy Duty Hold-Down Bracket

- Design load is 4000 lbs/pair.
- Four bolt design.
- Sold in pairs.
- 3/8" cable ladder attachment hardware provided
- 1/2" support attachment hardware **not** provided.
- (*) Insert: ZN, SS4 or SS6

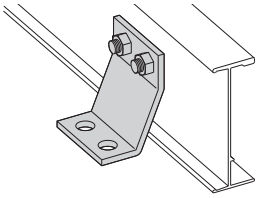

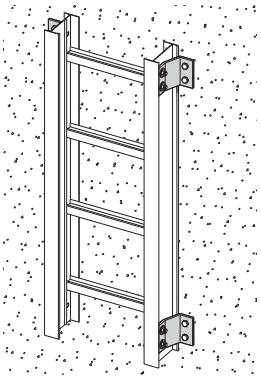

Catalog No.
9(*)-1242

Beam Clamp

- Finishes available: ZN or HDG
- Sold in pieces.

Design load when used in pairs.
Safety Load Factor 5.0

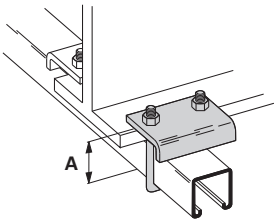

Catalog No.	Design Load* lbs	Design Load* kN	'A' in.	'A' mm
B441-22	1200	5.34	3 3/8	86
B441-22A	1200	5.34	5	127

Beam Clamp

- Finishes available: ZN, GRN, HDG or SS4
- Sold in pieces.
- Design load is 1200 lbs.when used in pairs.
- Safety Load Factor 5.0
- Order HHCS and Channel Nuts separately.

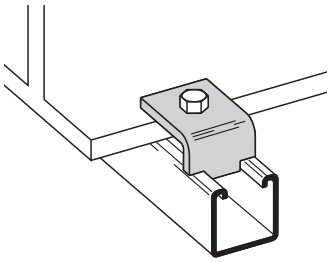

Catalog No.
B355

B305 Thru B308 & B321 Series Beam Clamps

- Finishes available: ZN or HDG
- Setscrew included.
- Safety Load Factor 5.0

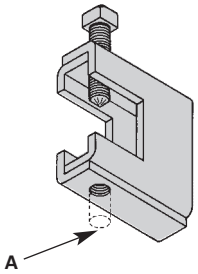

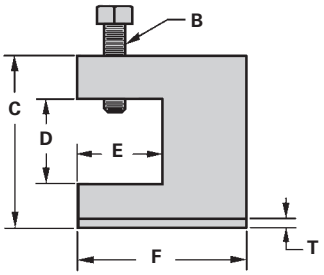

Cat. No.	Rod Size A	B	C	D	E	F	T	Design Load lbs	Design Load kN
B305	3/8"-16	3/8"-16	2 5/16	7/8	1 1/8	2 1/2	11 Ga.	600	2.67
B306	3/8"-16	1/2"-13	2 7/16	7/8	1 1/8	2 1/2	7 Ga.	1100	4.90
B307	1/2"-13	1/2"-13	2 7/16	7/8	1 1/8	2 1/2	7 Ga.	1100	4.90
B308	1/2"-13	1/2"-13	2 9/16	7/8	1 1/8	2 1/2	1/4	1500	6.68
B321-1	3/8"-16	1/2"-13	3 9/16	1 11/16	1 5/8	3 1/4	1/4	1300	5.79
B321-2	1/2"-13	1/2"-13	3 9/16	1 11/16	1 5/8	3 1/4	1/4	1400	6.23

B312 Anchor Strap

- Finish available: ZN
- For a maximum beam thickness of 3/4".
- For thicker beams, step up one flange width size.

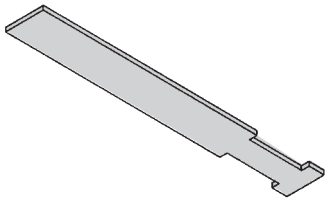

Cat. No.	Flange Width
B312-6	Up to 6"
B312-9	6" - 9"
B312-12	9" - 12"

Beam Clamp

- Finishes available: ZN, GRN or HDG
- Sold in pieces.

* Design load when used in pairs. Safety Load Factor 5.0

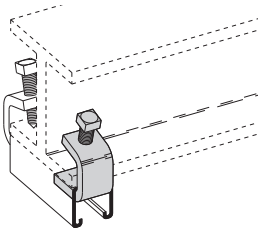

Catalog No.	Design Load* lbs	Design Load* kN	Max. Flange Thickness in.	Max. Flange Thickness mm	Material Thickness in.	Material Thickness mm
B212-1/4	600	2.67	3/4	28.6	1/4	6.3
B212-3/8	1000	4.45	1 1/8	6.3	3/8	9.5

Beam Clamp

- Finish available: ZN
- Design Load 500 lbs. (2.22 kN)
- Safety Load Factor 5.0
- Recommended torque: 'J'-Hook Nut 125 In.-Lbs. (14.1 kN/m)
- Maximum flange thickness of 3/4"

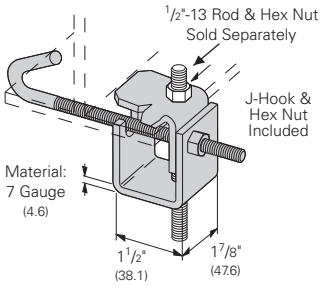

Catalog No.	For Flange Width in.	For Flange Width mm	Wt./C lbs	Wt./C kg
B750-J4	3 - 6	76.2 - 152.4	109	49.4
B750-J6	5 - 9	127.0 - 288.6	124	56.2
B750-J9	8 - 12	203.2 - 304.8	135	61.2
B750-J12	11 - 15	279.4 - 381.0	147	66.7

Beam Clamp

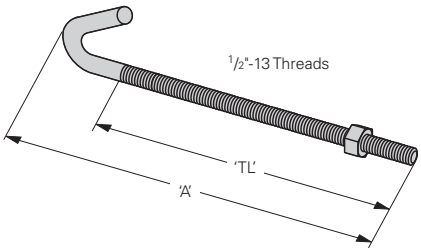

Catalog No.	'A' in.	'A' mm	Thread Length 'TL' in.	Thread Length 'TL' mm	Wt./C lbs	Wt./C kg
B700-J4	8 1/2	215.9	5	127.0	44	19.9
B700-J6	11 1/2	292.1	6	152.4	53	24.0
B700-J9	12 1/4	368.3	6	152.4	63	28.6
B700-J12	17 1/2	444.5	6	152.4	78	35.4

- Finish available: ZN
- Hex Nut included.

Straight Section Covers

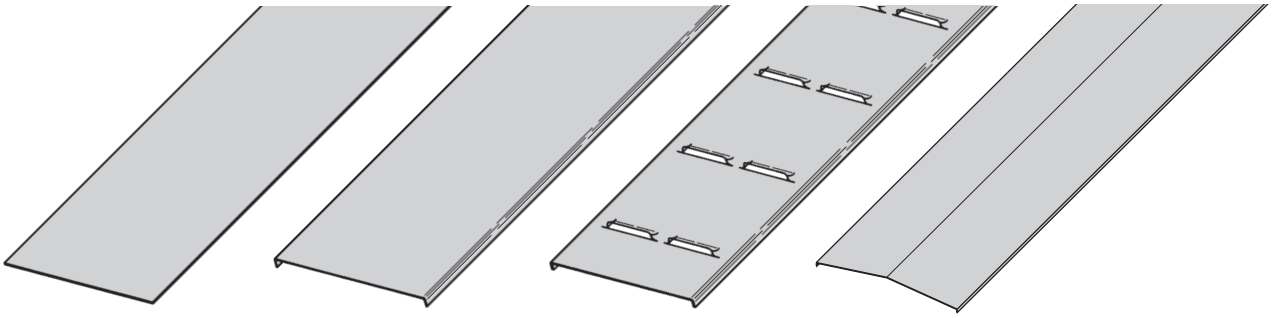

Solid Non-Flanged | Solid Flanged | Ventilated Flanged | Peaked Flanged

A full range of covers is available for straight sections and fittings.

Solid covers should be used when maximum enclosure of the cable is desired and no accumulation of heat is expected.
Ventilated covers provide an overhead cable shield, yet allow heat to escape.
B-Line recommends that covers be placed on vertical cable ladder runs to a height of 6 ft. (1.83 m) to 8 ft. (2.44 m) above the floor to isolate both cables and personnel.
Flanged covers have a 1/2 in. (13 mm) flange. All **peaked covers** are flanged. Standard peaked covers have 1/2" peak.
Cover clamps are not included with the covers and must be ordered separately.

Aluminum Straight Section Cover Part Numbering

Prefix | Suffix

Example: **80 7 A 40 - 24 - 144**

Cover Type	Detail	Material	Material Thickness	Ladder Width	Item Description
80 = Solid	6 = Non-Flanged (80 & 81 type only)	A = Aluminum	40 = .040 Aluminum	06 = 6"	For Straight Section Cover:
81 = Ventilated	7 = Flange			09 = 9"	144 = 12 ft. (3.66 m)
82 = Peaked				12 = 12"	120 = 10 ft. (3.05 m)
				18 = 18"	72 = 6 ft. (1.83 m)
				24 = 24"	60 = 5 ft. (1.52 m)
				30 = 30"	
				36 = 36"	

Covers 30" and 36" wide have reinforcing ridges.

Aluminum

Fitting Covers

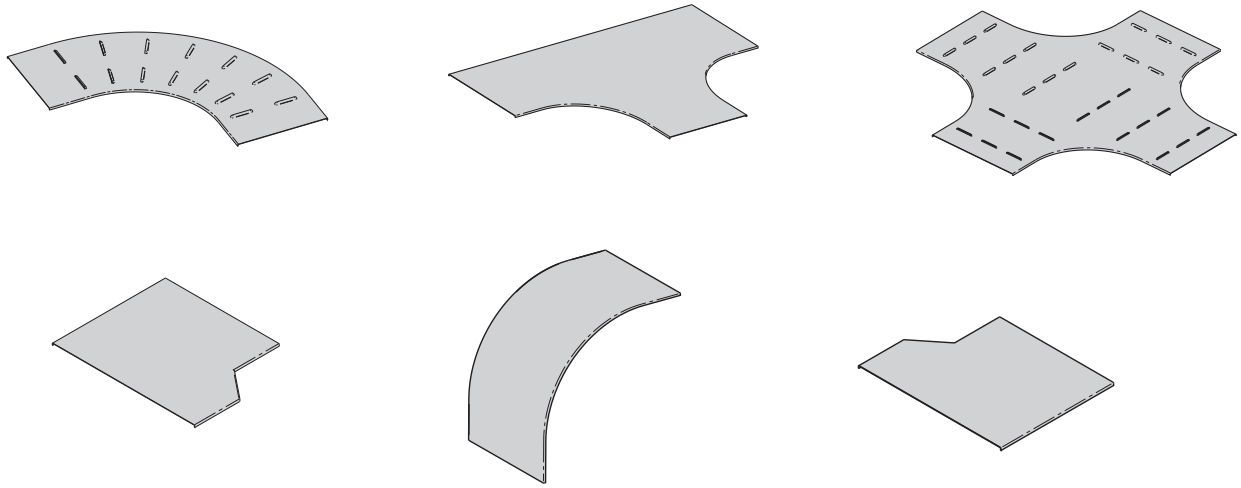

Aluminum Fitting Cover Part Numbering

Prefix — Suffix

Example: **80 7 A 40 - 06 - 90 HB 12 - 6** **(side rail height)**

Cover Type
80 = Solid
81 = Ventilated
82 = Peaked

Detail
6 = Non-Flanged (80 & 81 type only)
7 = Flange

Material
A = Aluminum

Material Thickness
40 = .040 Aluminum

HB **Insert HB Suffix from pages AL-50 & AL-51**
HT **Insert HT Suffix from pages AL-52**
HX **Insert HX Suffix from pages AL-52**
VI **Insert VI Suffix from pages AL-53 – AL-56**
VO **Insert VO Suffix from pages AL-53 – AL-56 & Side Rail Height**
VT **Insert VT Suffix from page AL-57 & Side Rail Height**
VTU **Insert VTU Suffix from page AL-57**
HYL **Insert HYL Suffix from page AL-58**
HYR **Insert HYR Suffix from page AL-58**
CSF **Insert CSF Suffix from pages AL-59 & Side Rail Height**
LR **Insert LR Suffix from page AL-61**
RR **Insert RR Suffix from page AL-61**
SR **Insert SR Suffix from page AL-61**
HT (Reducing) **Insert HT Reducing Suffix from page AL-62**
HT (Expanding) **Insert HT Expanding Suffix from page AL-63**
HX (Reducing) **Insert HX Red/Exp Suffix from page AL-64**

Covers 30" and 36" wide have reinforcing ridges.

Series 2, 3, 4, & 5 Aluminum Cable Ladder

Standard Cover Clamp

- For indoor service only.
- Setscrew included.
- Fits all side rail heights.
- Sold per piece.

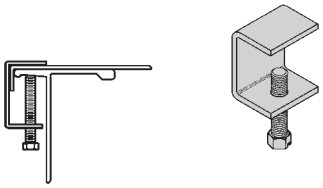

Catalog No.	Clamp Material
9ZN-9012	Zinc Plated Steel
9A-9012	Aluminum

Combination Cover and Hold Down Clamp

- Sold per piece.
- For indoor service only.

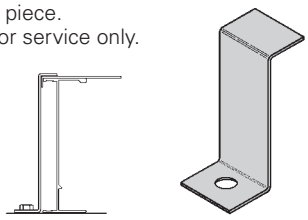

Catalog No.	Side Rail Height in.	Side Rail Height mm
9P-9043	4	101
9P-9053	5	127
9P-9063	6	152
9P-9073	7	178

Raised Cover Clamp

- For indoor service only.
- For use with flanged covers only.

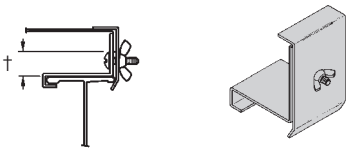

† Specify gap of 1", 2", 3" or 4".

Catalog No.	Side Rail Height
9ZN-9112-†	4" & 5" Deep
9ZN-9113-†	6" & 7" Deep

Heavy Duty Cover Clamp

- Recommended for outdoor service.

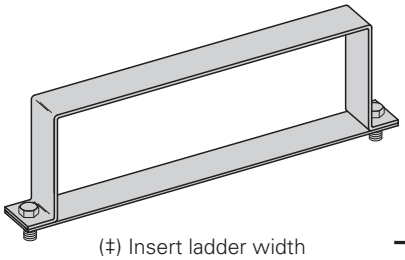

(‡) Insert ladder width
† Add P to Catalog No. for peaked cover clamp.

Peaked Cover Clamp

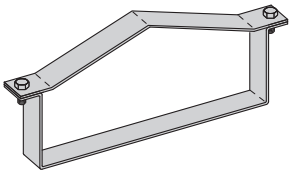

Catalog No.	Side Rail Height in.	Side Rail Height mm
9A-(‡)-9044†	4	101
9A-(‡)-9054†	5	127
9A-(‡)-9064†	6	152
9A-(‡)-9074†	7	178

Quantity of Standard Cover Clamps Required	
Straight Section 60" or 72"	4 pcs.
Straight Section 120" or 144"	6 pcs.
Horizontal/Vertical Bends	4 pcs.
Tees	6 pcs.
Crosses	8 pcs.

Note: When using the Heavy Duty Cover Clamp, only one-half the number of clamps stated above is required.

Cover Joint Strip

- Used to join covers
- Plastic
- (‡) Insert ladder width

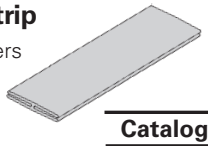

Catalog No.
99-9980-(‡)

Cable Cleats

(see pages CC-1 thru CC-5)

Trefoil Cable Cleats

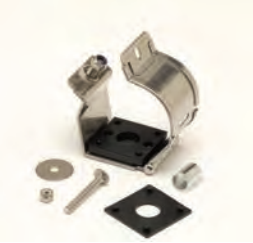

Single Cable Cleats

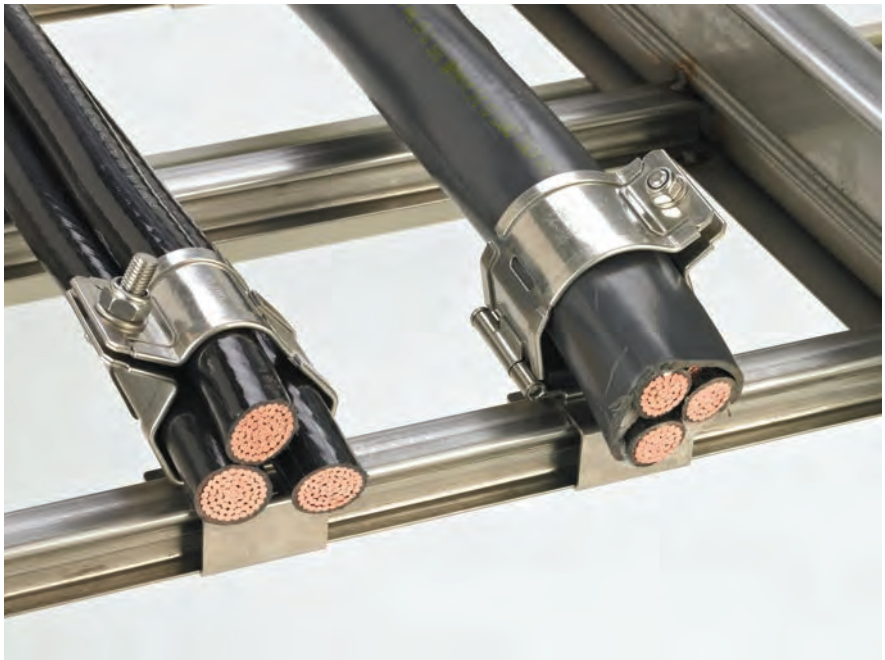

Section 1- Acceptable Manufacturers

1.01 Manufacturer: Subject to compliance with these specifications, cable ladder systems shall be as manufactured by Eaton's B-Line Business.

Section 2- Cable Ladder Sections and Components

2.01 General: Except as otherwise indicated, provide metal cable ladders, of types, classes and sizes indicated; with splice plates, bolts, nuts and washers for connecting units. Construct units with rounded edges and smooth surfaces; in compliance with applicable standards; and with the following additional construction features. Cable ladder shall be installed according to the latest revision of NEMA VE 2.

2.02 Materials and Finish: Straight section and fitting side rails and rungs shall be extruded from Aluminum Association Alloy 6063. All fabricated parts shall be made from Aluminum Association Alloy 5052.

2.03 Ladder Cable Ladders shall consist of two longitudinal members (side rails) with transverse members (rungs) welded to the side rails. Rungs shall be spaced [6] [9] [12] inches on center. Rung spacing in radiused fittings shall be industry standard 9" and measured at the center of the ladder's width. Each rung must be capable of supporting a 200 lb. concentrated load at the center of the cable ladder over and above the cable load with a safety factor of 1.5.

2.04 Ventilated Trough Cable Ladders shall consist of two longitudinal members (side rails) with a corrugated bottom welded to the side rails or rungs spaced 4" on center. The peaks of the corrugated bottom shall have a minimum flat cable bearing surface of $2^3/_4$" and shall be spaced on 6" centers. To provide ventilation in the ladder, the valleys of the corrugated bottom shall have $2^1/_4$" x 4" rectangular holes punched along the width of the bottom.

2.05 Non-Ventilated Bottom Trough Cable Ladders shall consist of two longitudinal members (side rails) with a corrugated bottom welded to the side rails or a solid sheet over rungs. The peaks of the corrugated bottom shall have a minimum flat cable bearing surface of $2^3/_4$" and shall be spaced on 6" centers.

2.06 Cable ladder loading depth shall be [3] [4] [5] [6] inches per NEMA VE 1.

2.07 Straight sections shall have side rails fabricated as I-beams. Straight sections shall be supplied in standard [12 foot] [24 foot] [10 foot (3 m)] [20 foot (6 m)] lengths.

2.08 Cable ladder widths shall be [6] [9] [12] [18] [24] [30] [36] inches or as shown on drawings.

2.09 Splice plates shall be the Wedge-Lock design with 4 nuts and bolts per plate. The resistance of fixed splice connections between an adjacent section of ladder shall not exceed 0.00033 ohm.

2.10 All fittings must have a minimum radius of [12] [24] [36] [48] inches.

Section 3- Loading Capacities and Testing

3.01 Cable ladder shall be capable of carrying a uniformly distributed load of _____ lbs./ft. on a _____ ft. support span with a safety factor of 1.5 when supported as a simple span and tested per NEMA VE 1 5.2. In addition to the uniformly distributed load the cable ladder shall support 200 lbs. concentrated load at mid-point of span. Load and safety factors specified are applicable to both the side rails and rung capacities. Cable ladder shall be made to manufacturing tolerances as specified by NEMA.

3.02 Upon request, manufacturer shall provide test reports in accordance with the latest revision of NEMA VE 1 or CSA C22.2 No. 126.

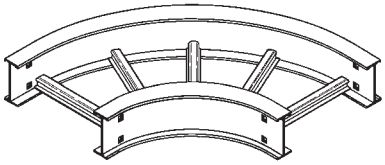

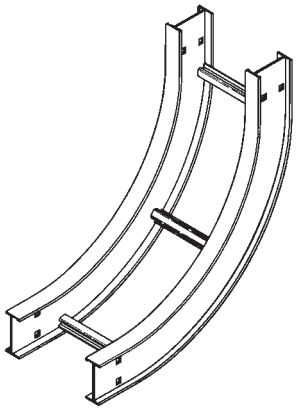

Fittings engineered with 3" tangents for splicing integrity.

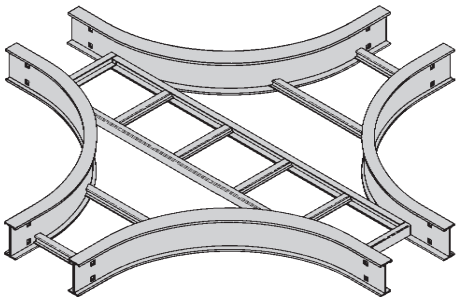

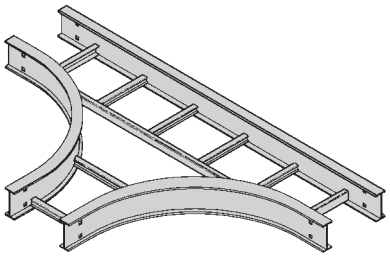

Fittings Part Numbering

Prefix Suffix

Example: **4 A - 24 - 90 HB 24** (9" rung spacing is standard)

Side Rail Height
- 4 = 4" (101)
- 5 = 5" (127)
- 6 = 6" (152)
- 7 = 7" (178)

Material
- A= Aluminum

Width
- 06 = 6" (152)
- 09 = 9" (228)
- 12 = 12" (305)
- 18 = 18" (457)
- 24 = 24" (609)
- 30 = 30" (762)
- 36 = 36" (914)

Angle
- 30 = 30°
- 45 = 45°
- 60 = 60°
- 90 = 90°

Type
- HB = Horizontal Bend
- HT = Horizontal Tee
- HX = Horizontal Cross
- VI = Vertical Inside Bend
- VO = Vertical Outside Bend
- VT = Vertical Tee
- VTU = Vertical Tee, Up
- HYR = Horizontal Wye, Right
- HYL = Horizontal Wye, Left
- CSF = Cable Support Fitting

Radius
- 12 = 12" (305)
- 24 = 24" (609)
- 36 = 36" (914)
- 48 = 48" (1219)

Aluminum

For ventilated trough, solid trough, ventilated bottom or solid bottom, add VT, ST, 04 or SB as shown below: Available 6" thru 36"

Prefix
4AVT - 24 - 90HB24
Vented Trough

Prefix
4AST - 24 - 90HB24
Non-Ventilated Trough

For flat non-ventilated: Available 6" and Wider

Prefix
5ASB - 24 - 90HB24
Non-Ventilated

Note: Horizontal crosses and tees 30" or wider, with a radius of 36" or larger, will be of two-piece construction.

Horizontal Bend 90° 60° (HB)

1 pair splice plates with hardware included.

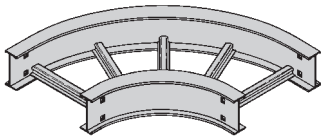

90˚ Horizontal Bend

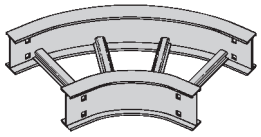

60˚ Horizontal Bend

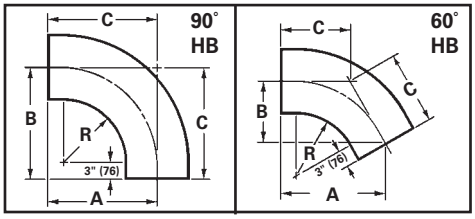

Bottoms manufactured:

Ladder = 9" Rung Spacing
VT & 04 = 4" Rung Spacing
ST & SB = Flat sheet over 12" Rung Spacing

Bend Radius R		Ladder Width		45˚ Horizontal Bend Dimensions							30˚ Horizontal Bend Dimensions						
				Catalog No.	A		B		C		Catalog No.	A		B		C	
in.	mm	in.	mm		in.	mm	in.	mm	in.	mm		in.	mm	in.	mm	in.	mm
12	305	6	152	(Pre)-06-90HB12	18	457	18	457	18	457	(Pre)-06-60HB12	17 1/2	445	10 1/8	257	11 11/16	297
		9	228	(Pre)-09-90HB12	19 1/2	495	19 1/2	495	19 1/2	495	(Pre)-09-60HB12	18 13/16	478	10 7/8	276	12 1/2	318
		12	305	(Pre)-12-90HB12	21	533	21	533	21	533	(Pre)-12-60HB12	20 1/16	510	11 5/8	295	13 3/8	340
		18	457	(Pre)-18-90HB12	24	610	24	610	24	610	(Pre)-18-60HB12	22 11/16	576	13 1/8	333	15 1/8	384
		24	609	(Pre)-24-90HB12	27	686	27	686	27	686	(Pre)-24-60HB12	25 5/16	643	14 5/8	372	16 7/8	429
		30	762	(Pre)-30-90HB12	30	762	30	762	30	762	(Pre)-30-60HB12	27 7/8	708	16 1/8	410	18 9/16	472
		36	914	(Pre)-36-90HB12	33	838	33	838	33	838	(Pre)-36-60HB12	30 1/2	775	17 5/8	448	20 5/16	516
		42	1218	(Pre)-42-90HB12	36	914	36	914	36	914	(Pre)-42-60HB12	33 1/16	840	19 1/8	486	22 1/16	560
24	610	6	152	(Pre)-06-90HB24	30	762	30	762	30	762	(Pre)-06-60HB24	27 7/8	708	16 1/8	410	18 9/16	472
		9	228	(Pre)-09-90HB24	31 1/2	800	31 1/2	800	31 1/2	800	(Pre)-09-60HB24	29 3/16	741	16 7/8	429	19 7/16	494
		12	305	(Pre)-12-90HB24	33	838	33	838	33	838	(Pre)-12-60HB24	30 1/2	775	17 5/8	448	20 5/16	516
		18	457	(Pre)-18-90HB24	36	914	36	914	36	914	(Pre)-18-60HB24	33 1/16	708	19 1/8	486	22 1/16	560
		24	609	(Pre)-24-90HB24	39	991	39	991	39	991	(Pre)-24-60HB24	35 11/16	907	20 5/8	524	23 13/16	605
		30	762	(Pre)-30-90HB24	42	1067	42	1067	42	1067	(Pre)-30-60HB24	38 1/4	972	22 1/8	564	25 1/2	648
		36	914	(Pre)-36-90HB24	45	1143	45	1143	45	1143	(Pre)-36-60HB24	40 7/8	1038	23 5/8	600	27 1/4	692
		42	1218	(Pre)-42-90HB24	48	1219	48	1219	48	1219	(Pre)-42-60HB24	43 1/2	1105	25 1/8	638	29	737
36	915	6	152	(Pre)-06-90HB36	42	1067	42	1067	42	1067	(Pre)-06-60HB36	38 1/4	971	22 1/8	562	25 1/2	648
		9	228	(Pre)-09-90HB36	43 1/2	1105	43 1/2	1105	43 1/2	1105	(Pre)-09-60HB36	39 9/16	1005	22 7/8	581	26 3/8	670
		12	305	(Pre)-12-90HB36	45	1143	45	1143	45	1143	(Pre)-12-60HB36	40 7/8	1038	23 5/8	600	27 1/4	692
		18	457	(Pre)-18-90HB36	48	1219	48	1219	48	1219	(Pre)-18-60HB36	43 1/2	1105	25 1/8	638	29	737
		24	609	(Pre)-24-90HB36	51	1295	51	1295	51	1295	(Pre)-24-60HB36	46 1/16	1170	26 5/8	676	30 11/16	780
		30	762	(Pre)-30-90HB36	54	1372	54	1375	54	1372	(Pre)-30-60HB36	48 1/16	1237	28 1/8	714	32 7/16	824
		36	914	(Pre)-36-90HB36	57	1448	57	1488	57	1448	(Pre)-36-60HB36	51 1/4	1302	29 5/8	753	34 3/16	869
		42	1218	(Pre)-42-90HB36	60	1524	60	1524	60	1524	(Pre)-42-60HB36	53 7/8	1368	31 1/8	791	35 15/16	913
48	1220	6	152	(Pre)-06-90HB48	54	1372	54	1372	54	1372	(Pre)-06-60HB48	48 1/16	1221	28 1/8	715	32 11/16	830
		9	228	(Pre)-09-90HB48	55 1/2	1410	55 1/2	1410	55 1/2	1410	(Pre)-09-60HB48	49 15/16	1268	28 7/8	734	33 5/16	846
		12	305	(Pre)-12-90HB48	57	1448	57	1448	57	1448	(Pre)-12-60HB48	51 1/4	1302	29 5/8	753	34 3/16	868
		18	457	(Pre)-18-90HB48	60	1524	60	1524	60	1524	(Pre)-18-60HB48	53 7/8	1368	31 1/8	791	35 15/16	913
		24	609	(Pre)-24-90HB48	63	1600	63	1600	63	1600	(Pre)-24-60HB48	56 7/16	1434	32 5/8	829	37 5/8	956
		30	762	(Pre)-30-90HB48	66	1676	66	1676	66	1676	(Pre)-30-60HB48	59 1/16	1500	34 1/8	867	39 3/8	1000
		36	914	(Pre)-36-90HB48	69	1753	69	1753	69	1753	(Pre)-36-60HB48	61 11/16	1567	35 5/8	905	41 1/8	1045
		42	1218	(Pre)-42-90HB48	72	1829	72	1829	72	1829	(Pre)-42-60HB48	64 1/4	1632	37 1/8	943	42 13/16	1087

(Pre) See page AL-49 for catalog number prefix.
Width dimensions are to inside wall. For aluminum fittings add 1.5 inches for total outside width.
Manufacturing tolerances apply to all dimensions.

Horizontal Bend 45° 30° (HB)

1 pair splice plates with hardware included.

Bottoms manufactured:

Ladder = 9" Rung Spacing
VT & 04 = 4" Rung Spacing
ST & SB = Flat sheet over 12" Rung Spacing

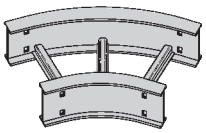

45˚ Horizontal Bend

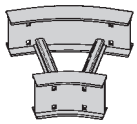

30˚ Horizontal Bend

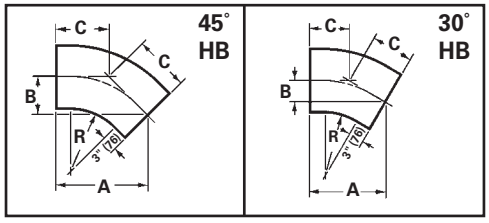

Bend Radius R in.	Bend Radius R mm	Ladder Width in.	Ladder Width mm	45˚ Horizontal Bend Dimensions Catalog No.	A in.	A mm	B in.	B mm	C in.	C mm	30˚ Horizontal Bend Dimensions Catalog No.	A in.	A mm	B in.	B mm	C in.	C mm
12	305	6	152	**(Pre)-06-45HB12**	15 3/4	400	6 1/2	165	9 3/16	233	**(Pre)-06-30HB12**	13 1/8	333	3 1/2	89	7	179
		9	228	**(Pre)-09-45HB12**	16 13/16	427	6 15/16	176	9 13/16	249	**(Pre)-09-30HB12**	13 7/8	352	3 11/16	94	7 7/16	189
		12	305	**(Pre)-12-45HB12**	17 7/8	454	7 3/8	187	10 7/16	265	**(Pre)-12-30HB12**	14 5/8	372	3 15/16	100	7 13/16	198
		18	457	**(Pre)-18-45HB12**	20	508	8 1/4	210	11 11/16	297	**(Pre)-18-30HB12**	16 1/8	410	4 5/16	135	8 5/8	219
		24	609	**(Pre)-24-45HB12**	22 1/16	560	9 1/8	232	12 15/16	329	**(Pre)-24-30HB12**	17 5/8	448	4 11/16	119	9 7/16	240
		30	762	**(Pre)-30-45HB12**	24 3/16	614	10	254	14 3/16	360	**(Pre)-30-30HB12**	19 1/8	486	5 1/8	130	10 1/4	260
		36	914	**(Pre)-36-45HB12**	26 5/16	668	10 15/16	278	15 7/16	392	**(Pre)-36-30HB12**	20 5/8	524	5 1/2	140	11 1/16	281
		42	1218	**(Pre)-42-45HB12**	28 7/16	722	11 13/16	300	16 11/16	424	**(Pre)-42-30HB12**	22 1/8	562	5 15/16	151	11 13/16	300
24	610	6	152	**(Pre)-06-45HB24**	24 3/16	614	10	254	14 3/16	360	**(Pre)-06-30HB24**	19 1/8	486	5 1/8	130	10 1/4	260
		9	228	**(Pre)-09-45HB24**	25 1/4	641	10 1/2	267	14 13/16	376	**(Pre)-09-30HB24**	19 7/8	505	5 5/16	135	10 5/8	270
		12	305	**(Pre)-12-45HB24**	26 5/16	668	10 15/16	278	15 7/16	392	**(Pre)-12-30HB24**	20 5/8	524	5 1/2	140	11 1/16	281
		18	457	**(Pre)-18-45HB24**	28 7/16	722	11 13/16	300	16 11/16	424	**(Pre)-18-30HB24**	22 1/8	562	5 15/16	151	11 13/16	300
		24	609	**(Pre)-24-45HB24**	30 9/16	766	12 11/16	322	17 15/16	456	**(Pre)-24-30HB24**	23 5/8	600	6 5/16	160	12 5/8	321
		30	762	**(Pre)-30-45HB24**	32 11/16	830	13 9/16	344	19 1/8	486	**(Pre)-30-30HB24**	25 1/8	638	6 3/4	172	13 7/16	341
		36	914	**(Pre)-36-45HB24**	34 13/16	884	14 7/16	367	20 3/8	518	**(Pre)-36-30HB24**	26 5/8	676	7 1/8	181	14 1/4	362
		42	1218	**(Pre)-42-45HB24**	36 15/16	938	15 5/16	389	21 5/8	549	**(Pre)-42-30HB24**	28 1/8	715	7 1/2	191	15 1/16	383
36	915	6	152	**(Pre)-06-45HB36**	32 11/16	830	13 9/16	344	19 1/8	486	**(Pre)-06-30HB36**	25 1/8	638	6 3/4	171	13 7/16	341
		9	228	**(Pre)-09-45HB36**	33 3/4	857	14	356	19 3/4	502	**(Pre)-09-30HB36**	25 7/8	657	6 15/16	176	13 7/8	352
		12	305	**(Pre)-12-45HB36**	34 13/16	884	14 7/16	367	20 3/8	518	**(Pre)-12-30HB36**	26 5/8	676	7 1/8	181	14 1/4	362
		18	457	**(Pre)-18-45HB36**	36 15/16	938	15 5/16	389	21 5/8	549	**(Pre)-18-30HB36**	28 1/8	114	7 1/2	191	15 1/16	383
		24	609	**(Pre)-24-45HB36**	39 1/6	992	16 3/16	411	22 7/8	581	**(Pre)-24-30HB36**	29 5/8	753	7 15/16	202	15 7/8	403
		30	762	**(Pre)-30-45HB36**	41 3/16	1046	17 1/16	433	24 1/8	613	**(Pre)-30-30HB36**	31 1/8	790	8 5/16	211	16 11/16	424
		36	914	**(Pre)-36-45HB36**	43 5/16	1100	17 15/16	456	25 3/8	645	**(Pre)-36-30HB36**	32 5/8	829	8 3/4	222	17 1/2	445
		42	1218	**(Pre)-42-45HB36**	45 7/16	1154	18 13/16	478	26 5/8	676	**(Pre)-42-30HB36**	34 1/8	867	9 1/8	232	18 1/4	464
48	1220	6	152	**(Pre)-06-45HB48**	41 3/16	1046	17 1/16	433	24 1/8	613	**(Pre)-06-30HB48**	31 1/8	791	8 5/16	211	16 11/16	424
		9	228	**(Pre)-09-45HB48**	42 1/4	1073	17 1/2	445	24 3/4	629	**(Pre)-09-30HB48**	31 7/8	810	8 9/16	218	17 1/16	433
		12	305	**(Pre)-12-45HB48**	43 5/16	1100	17 15/16	456	25 3/8	645	**(Pre)-12-30HB48**	32 5/8	829	8 3/4	222	17 1/2	445
		18	457	**(Pre)-18-45HB48**	45 7/16	1154	18 13/16	487	26 5/8	676	**(Pre)-18-30HB48**	34 1/8	867	9 1/8	232	18 1/4	464
		24	609	**(Pre)-24-45HB48**	47 9/16	1208	19 11/16	500	27 7/8	708	**(Pre)-24-30HB48**	35 5/8	905	9 9/16	243	19 1/16	484
		30	762	**(Pre)-30-45HB48**	49 11/16	1262	20 9/16	522	29 1/8	740	**(Pre)-30-30HB48**	37 1/8	943	9 15/16	252	19 7/8	505
		36	914	**(Pre)-36-45HB48**	51 13/16	1316	21 7/16	545	30 5/16	770	**(Pre)-36-30HB48**	38 5/8	981	10 5/16	262	20 11/16	525
		42	1218	**(Pre)-42-45HB48**	54 15/16	1395	22 5/16	567	31 9/16	802	**(Pre)-42-30HB48**	40 1/8	1019	10 3/4	273	21 1/2	546

(Pre) See page AL-49 for catalog number prefix.
Width dimensions are to inside wall. For aluminum fittings add 1.5 inches for total outside width.
Manufacturing tolerances apply to all dimensions.

Horizontal Tee (HT)

2 pair splice plates with hardware included.

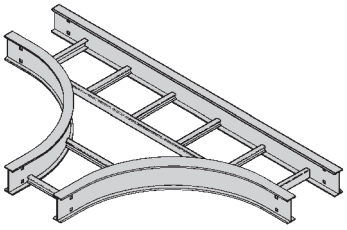

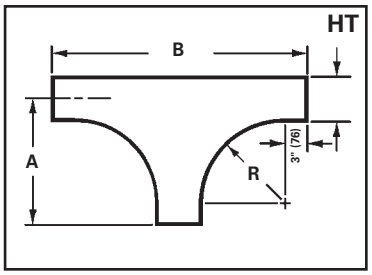

Horizontal Cross (HX)

3 pair splice plates with hardware included.

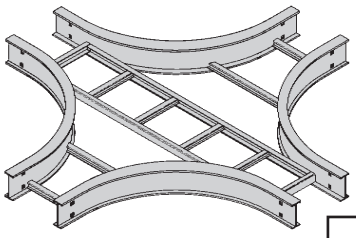

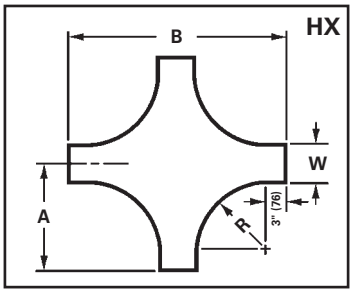

Bend Radius R		Ladder Width		Horizontal Tee Catalog Number	Horizontal Tee Dimensions A		Horizontal Tee Dimensions B		Horizontal Cross Catalog Number	Horizontal Cross Dimensions A		Horizontal Cross Dimensions B	
in.	mm	in.	mm		in.	mm	in.	mm		in.	mm	in.	mm
12	305	6	152	**(Prefix)-06-HT12**	18	457	36	914	**(Prefix)-06-HX12**	18	457	36	914
		9	229	**(Prefix)-09-HT12**	19 1/2	496	39	991	**(Prefix)-09-HX12**	19 1/2	496	39	991
		12	305	**(Prefix)-12-HT12**	21	533	42	1067	**(Prefix)-12-HX12**	21	533	42	1067
		18	457	**(Prefix)-18-HT12**	24	609	48	1219	**(Prefix)-18-HX12**	24	609	48	1219
		24	609	**(Prefix)-24-HT12**	27	686	54	1372	**(Prefix)-24-HX12**	27	686	54	1372
		30	762	**(Prefix)-30-HT12**	30	762	60	1524	**(Prefix)-30-HX12**	30	762	60	1524
		36	914	**(Prefix)-36-HT12**	33	838	66	1676	**(Prefix)-36-HX12**	33	838	66	1676
		42	1067	**(Prefix)-42-HT12**	36	914	72	1829	**(Prefix)-42-HX12**	36	914	72	1829
24	610	6	152	**(Prefix)-06-HT24**	30	762	60	1542	**(Prefix)-06-HX24**	30	762	60	1524
		9	229	**(Prefix)-09-HT24**	31 1/2	800	63	1600	**(Prefix)-09-HX24**	31 1/2	800	63	1600
		12	305	**(Prefix)-12-HT24**	33	838	66	1676	**(Prefix)-12-HX24**	33	838	66	1676
		18	457	**(Prefix)-18-HT24**	36	914	72	1828	**(Prefix)-18-HX24**	36	914	72	1828
		24	609	**(Prefix)-24-HT24**	39	991	78	1982	**(Prefix)-24-HX24**	39	991	78	1982
		30	762	**(Prefix)-30-HT24**	42	1067	84	2134	**(Prefix)-30-HX24**	42	1067	84	2134
		36	914	**(Prefix)-36-HT24**	45	1143	90	2286	**(Prefix)-36-HX24**	45	1143	90	2286
		42	1067	**(Prefix)-42-HT24**	48	1219	96	2438	**(Prefix)-42-HX24**	48	1219	96	2438
36	915	6	152	**(Prefix)-06-HT36**	42	1067	84	2134	**(Prefix)-06-HX36**	42	1067	84	2134
		9	229	**(Prefix)-09-HT36**	43 1/2	1105	87	2210	**(Prefix)-09-HX36**	43 1/2	1105	87	2210
		12	305	**(Prefix)-12-HT36**	45	1143	90	2286	**(Prefix)-12-HX36**	45	1143	90	2286
		18	457	**(Prefix)-18-HT36**	48	1219	96	2438	**(Prefix)-18-HX36**	48	1219	96	2438
		24	609	**(Prefix)-24-HT36**	51	1295	102	2590	**(Prefix)-24-HX36**	51	1295	102	2590
		30	762	**(Prefix)-30-HT36**	54	1372	108	2744	**(Prefix)-30-HX36**	54	1372	108	2744
		36	914	**(Prefix)-36-HT36**	57	1488	114	2896	**(Prefix)-36-HX36**	57	1448	114	2896
		42	1067	**(Prefix)-42-HT36**	60	1524	120	3048	**(Prefix)-42-HX36**	60	1524	120	3048
48	1220	6	152	**(Prefix)-06-HT48**	54	1372	108	2743	**(Prefix)-06-HX48**	54	1372	108	2743
		9	229	**(Prefix)-09-HT48**	55 1/2	1410	111	2820	**(Prefix)-09-HX48**	55 1/2	1410	111	2820
		12	305	**(Prefix)-12-HT48**	57	1448	114	2896	**(Prefix)-12-HX48**	57	1448	114	2896
		18	457	**(Prefix)-18-HT48**	60	1524	120	3048	**(Prefix)-18-HX48**	60	1524	120	3048
		24	609	**(Prefix)-24-HT48**	63	1600	126	3200	**(Prefix)-24-HX48**	63	1600	126	3200
		30	762	**(Prefix)-30-HT48**	66	1676	132	3353	**(Prefix)-30-HX48**	66	1676	132	3353
		36	914	**(Prefix)-36-HT48**	69	1753	138	3535	**(Prefix)-36-HX48**	69	1753	138	3505
		42	1067	**(Prefix)-42-HT48**	72	1829	144	3658	**(Prefix)-42-HX48**	72	1829	144	3658

(Prefix) See page AL-49 for catalog number prefix.
Width dimensions are to inside wall. For aluminum fittings add 1.5 inches for total outside width.
Manufacturing tolerances apply to all dimensions.

Vertical Bend 90˚ (VO, VI)

1 pair splice plates with hardware included.

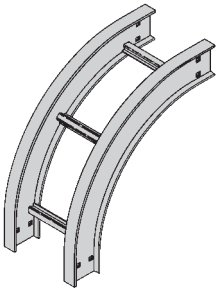

90˚ Vertical Outside

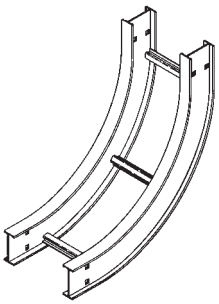

90˚ Vertical Inside

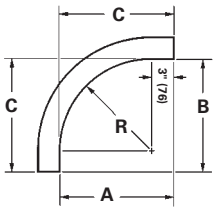

90˚ VO

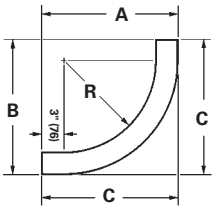

90˚ VI

Bend Radius R in.	Ladder Width in. (mm)	(*) Insert "VO" for Vert. Outside Bend Insert "VI" for Vert. Inside Bend Catalog No.	VO Side Rail Height 4" - 7" A in.	B in.	C in.	VI Side Rail Height 4" A in.	B in.	C in.	5" A in.	B in.	C in.	6" A in.	B in.	C in.	7" A in.	B in.	C in.
12 (305)	6 (152)	**(Prefix)-06-90(*)12**	15 (381)	15 (381)	15 (381)	19 (483)	19 (483)	19 (483)	20 (508)	20 (508)	20 (508)	21 (533)	21 (533)	21 (533)	22 (559)	22 (559)	22 (559)
	9 (228)	**(Prefix)-09-90(*)12**															
	12 (305)	**(Prefix)-12-90(*)12**															
	18 (457)	**(Prefix)-18-90(*)12**															
	24 (609)	**(Prefix)-24-90(*)12**															
	30 (762)	**(Prefix)-30-90(*)12**															
	36 (914)	**(Prefix)-36-90(*)12**															
	42 (1067)	**(Prefix)-42-90(*)12**															
24 (609)	6 (152)	**(Prefix)-06-90(*)24**	27 (686)	27 (686)	27 (686)	31 (787)	31 (787)	31 (787)	32 (813)	32 (813)	32 (813)	33 (838)	33 (838)	33 (838)	34 (864)	34 (864)	34 (864)
	9 (228)	**(Prefix)-09-90(*)24**															
	12 (305)	**(Prefix)-12-90(*)24**															
	18 (457)	**(Prefix)-18-90(*)24**															
	24 (609)	**(Prefix)-24-90(*)24**															
	30 (762)	**(Prefix)-30-90(*)24**															
	36 (914)	**(Prefix)-36-90(*)24**															
	42 (1067)	**(Prefix)-42-90(*)24**															
36 (914)	6 (152)	**(Prefix)-06-90(*)36**	39 (991)	39 (991)	39 (991)	43 (1092)	43 (1092)	43 (1092)	44 (1118)	44 (1118)	44 (1118)	45 (1143)	45 (1143)	45 (1143)	46 (1168)	46 (1168)	46 (1168)
	9 (228)	**(Prefix)-09-90(*)36**															
	12 (305)	**(Prefix)-12-90(*)36**															
	18 (457)	**(Prefix)-18-90(*)36**															
	24 (609)	**(Prefix)-24-90(*)36**															
	30 (762)	**(Prefix)-30-90(*)36**															
	36 (914)	**(Prefix)-36-90(*)36**															
	42 (1067)	**(Prefix)-42-90(*)36**															
48 (1219)	6 (152)	**(Prefix)-06-90(*)48**	51 (1295)	51 (1295)	51 (1295)	55 (1397)	55 (1397)	55 (1397)	56 (1422)	56 (1422)	56 (1422)	57 (1448)	57 (1448)	57 (1448)	58 (1473)	58 (1473)	58 (1473)
	9 (228)	**(Prefix)-09-90(*)48**															
	12 (305)	**(Prefix)-12-90(*)48**															
	18 (457)	**(Prefix)-18-90(*)48**															
	24 (609)	**(Prefix)-24-90(*)48**															
	30 (762)	**(Prefix)-30-90(*)48**															
	36 (914)	**(Prefix)-36-90(*)48**															
	42 (1067)	**(Prefix)-42-90(*)48**															

(Prefix) See page AL-49 for catalog number prefix.
Manufacturing tolerances apply to all dimensions.

Vertical Bend 60˚ (VO, VI)

1 pair splice plates with hardware included.

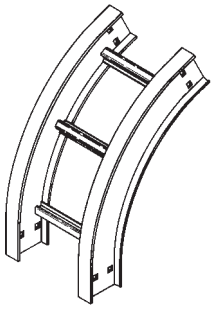

60˚ Vertical Outside

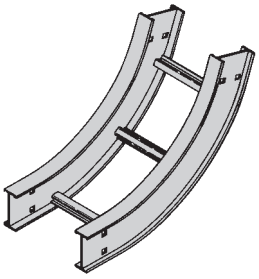

60˚ Vertical Inside

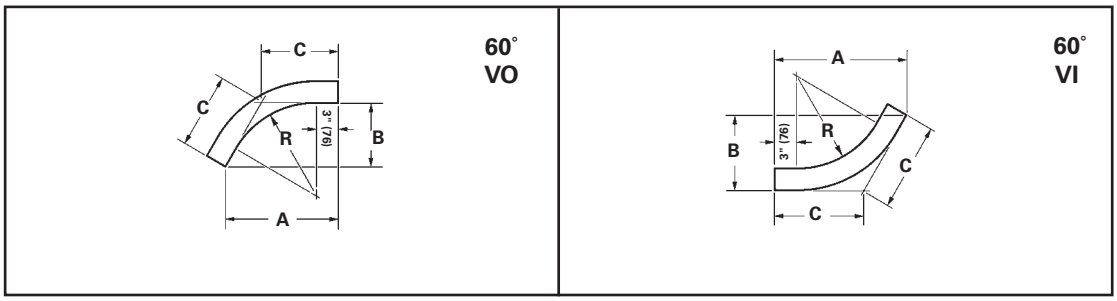

Bend Radius R in.	Ladder Width in. (mm)	(*) Insert "VO" for Vert. Outside Bend Insert "VI" for Vert. Inside Bend Catalog No.	VO Side Rail Height 4" - 7" A in.	B in.	C in.	VI Side Rail Height 4" A in.	B in.	C in.	5" A in.	B in.	C in.	6" A in.	B in.	C in.	7" A in.	B in.	C in.
12 (305)	6 (152)	**(Prefix)-06-60(*)12**	14 7/8 (378)	8 5/8 (219)	9 15/16 (253)	18 3/8 (467)	10 5/8 (270)	12 1/4 (311)	19 1/4 (489)	11 1/8 (283)	12 13/16 (326)	20 1/16 (510)	11 5/8 (296)	13 3/8 (340)	21 15/16 (557)	12 1/8 (308)	14 (356)
	9 (228)	**(Prefix)-09-60(*)12**															
	12 (305)	**(Prefix)-12-60(*)12**															
	18 (457)	**(Prefix)-18-60(*)12**															
	24 (609)	**(Prefix)-24-60(*)12**															
	30 (762)	**(Prefix)-30-60(*)12**															
	36 (914)	**(Prefix)-36-60(*)12**															
	42 (1067)	**(Prefix)-42-60(*)12**															
24 (609)	6 (152)	**(Prefix)-06-60(*)24**	25 5/16 (643)	14 5/8 (372)	16 7/8 (428)	28 3/4 (730)	16 5/8 (422)	19 3/16 (488)	29 5/8 (753)	17 1/8 (435)	19 3/4 (502)	30 1/2 (775)	17 5/8 (448)	20 5/16 (516)	31 3/8 (797)	18 1/8 (461)	20 7/8 (530)
	9 (228)	**(Prefix)-09-60(*)24**															
	12 (305)	**(Prefix)-12-60(*)24**															
	18 (457)	**(Prefix)-18-60(*)24**															
	24 (609)	**(Prefix)-24-60(*)24**															
	30 (762)	**(Prefix)-30-60(*)24**															
	36 (914)	**(Prefix)-36-60(*)24**															
	42 (1067)	**(Prefix)-42-60(*)24**															
36 (914)	6 (152)	**(Prefix)-06-60(*)36**	35 11/16 (907)	20 5/8 (524)	23 13/16 (605)	39 1/8 (994)	22 5/8 (575)	26 1/8 (663)	40 (1016)	23 1/8 (587)	26 11/16 (687)	40 7/8 (1038)	23 5/8 (600)	27 1/4 (692)	41 3/4 (1060)	24 1/8 (613)	27 13/16 (706)
	9 (228)	**(Prefix)-09-60(*)36**															
	12 (305)	**(Prefix)-12-60(*)36**															
	18 (457)	**(Prefix)-18-60(*)36**															
	24 (609)	**(Prefix)-24-60(*)36**															
	30 (762)	**(Prefix)-30-60(*)36**															
	36 (914)	**(Prefix)-36-60(*)36**															
	42 (1067)	**(Prefix)-42-60(*)36**															
48 (1219)	6 (152)	**(Prefix)-06-60(*)48**	46 1/16 (1170)	26 5/8 (676)	30 11/16 (780)	49 9/16 (1259)	28 5/8 (727)	33 (838)	50 3/8 (1280)	29 1/8 (740)	33 5/8 (854)	51 1/4 (1302)	29 5/8 (753)	34 3/16 (868)	52 1/8 (1324)	30 1/8 (765)	34 3/4 (883)
	9 (228)	**(Prefix)-09-60(*)48**															
	12 (305)	**(Prefix)-12-60(*)48**															
	18 (457)	**(Prefix)-18-60(*)48**															
	24 (609)	**(Prefix)-24-60(*)48**															
	30 (762)	**(Prefix)-30-60(*)48**															
	36 (914)	**(Prefix)-36-60(*)48**															
	42 (1067)	**(Prefix)-42-60(*)48**															

(Prefix) See page AL-49 for catalog number prefix.
Manufacturing tolerances apply to all dimensions.

Vertical Bend 45˚ (VO, VI)

1 pair splice plates with hardware included.

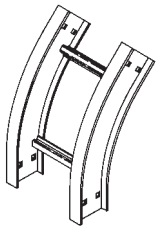

45˚ Vertical Outside

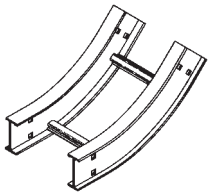

45˚ Vertical Inside

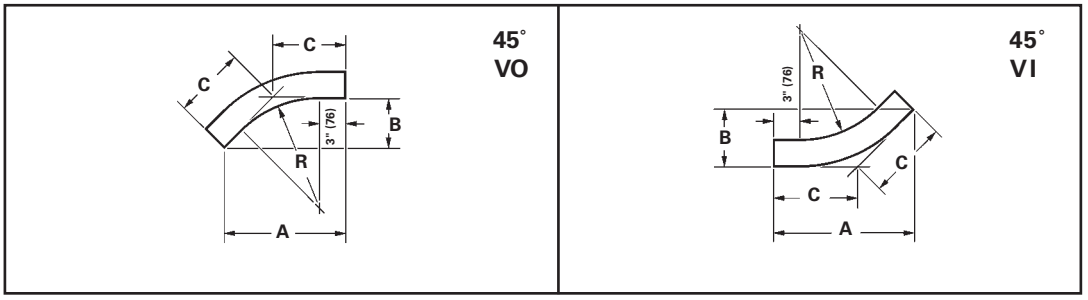

Bend Radius R in.	Ladder Width in. (mm)	(*) Insert "VO" for Vert. Outside Bend Insert "VI" for Vert. Inside Bend Catalog No.	VO Side Rail Height 4" - 7" A in.	B in.	C in.	VI Side Rail Height 4" A in.	B in.	C in.	5" A in.	B in.	C in.	6" A in.	B in.	C in.	7" A in.	B in.	C in.
12 (305)	6 (152)	**(Prefix)-06-45(*)12**	13 5/8 (346)	5 5/8 (143)	8 (203)	16 7/16 (417)	6 13/16 (173)	9 5/8 (245)	17 1/8 (435)	7 1/8 (181)	10 1/16 (256)	17 7/8 (454)	7 3/8 (188)	10 7/16 (265)	18 9/16 (471)	7 11/16 (195)	10 7/8 (2176)
	9 (228)	**(Prefix)-09-45(*)12**															
	12 (305)	**(Prefix)-12-45(*)12**															
	18 (457)	**(Prefix)-18-45(*)12**															
	24 (609)	**(Prefix)-24-45(*)12**															
	30 (762)	**(Prefix)-30-45(*)12**															
	36 (914)	**(Prefix)-36-45(*)12**															
	42 (1067)	**(Prefix)-42-45(*)12**															
24 (609)	6 (152)	**(Prefix)-06-45(*)24**	22 1/16 (561)	9 1/8 (232)	12 15/16 (329)	24 15/16 (634)	10 5/16 (262)	14 5/8 (372)	25 5/8 (651)	10 5/8 (270)	15 (381)	26 5/16 (668)	10 15/16 (278)	15 7/16 (392)	27 1/16 (687)	11 3/16 (284)	15 13/16 (402)
	9 (228)	**(Prefix)-09-45(*)24**															
	12 (305)	**(Prefix)-12-45(*)24**															
	18 (457)	**(Prefix)-18-45(*)24**															
	24 (609)	**(Prefix)-24-45(*)24**															
	30 (762)	**(Prefix)-30-45(*)24**															
	36 (914)	**(Prefix)-36-45(*)24**															
	42 (1067)	**(Prefix)-42-45(*)24**															
36 (914)	6 (152)	**(Prefix)-06-45(*)36**	30 9/16 (776)	12 11/16 (323)	17 15/16 (456)	33 3/8 (848)	13 13/16 (351)	19 9/16 (497)	34 1/8 (867)	14 1/8 (359)	20 (508)	34 13/16 (885)	14 7/16 (367)	20 3/8 (518)	35 1/2 (902)	14 11/16 (373)	20 13/16 (528)
	9 (228)	**(Prefix)-09-45(*)36**															
	12 (305)	**(Prefix)-12-45(*)36**															
	18 (457)	**(Prefix)-18-45(*)36**															
	24 (609)	**(Prefix)-24-45(*)36**															
	30 (762)	**(Prefix)-30-45(*)36**															
	36 (914)	**(Prefix)-36-45(*)36**															
	42 (1067)	**(Prefix)-42-45(*)36**															
48 (1219)	6 (152)	**(Prefix)-06-45(*)48**	39 1/16 (992)	16 3/16 (411)	22 7/8 (581)	41 7/8 (1064)	17 3/8 (441)	24 9/16 (624)	42 5/8 (1083)	17 5/8 (448)	24 15/16 (633)	43 5/16 (1100)	17 15/16 (456)	25 3/8 (645)	44 (1118)	18 1/4 (464)	25 13/16 (656)
	9 (228)	**(Prefix)-09-45(*)48**															
	12 (305)	**(Prefix)-12-45(*)48**															
	18 (457)	**(Prefix)-18-45(*)48**															
	24 (609)	**(Prefix)-24-45(*)48**															
	30 (762)	**(Prefix)-30-45(*)48**															
	36 (914)	**(Prefix)-36-45(*)48**															
	42 (1067)	**(Prefix)-42-45(*)48**															

(Prefix) See page AL-49 for catalog number prefix.
Manufacturing tolerances apply to all dimensions.

Vertical Bend 30˚ (VO, VI)

1 pair splice plates with hardware included.

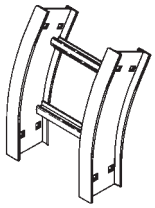

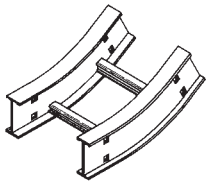

30˚ Vertical Outside

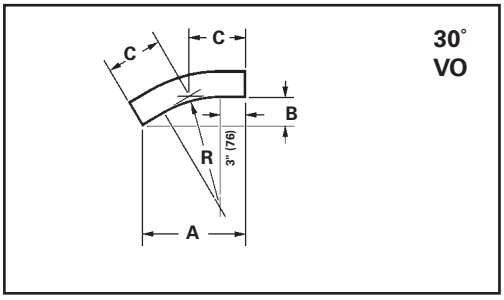

30˚ Vertical Inside

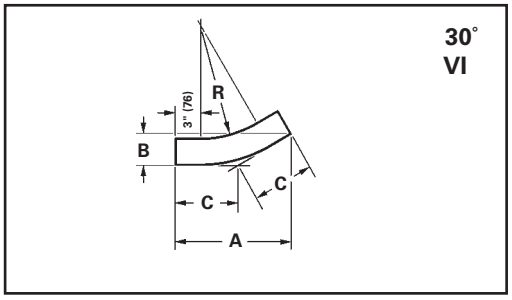

Bend Radius R	Ladder Width	(*) Insert "VO" for Vert. Outside Bend Insert "VI" for Vert. Inside Bend	VO Side Rail Height 4" - 7"			VI Side Rail Height											
						4"			5"			6"			7"		
			A	B	C	A	B	C	A	B	C	A	B	C	A	B	C
in.	in. (mm)	Catalog No.	in.	in.	in.	in.	in.	in.	in.	in.	in.	in.	in.	in.	in.	in.	in.
12 (305)	6 (152)	(Prefix)-06-30(*)12	$11\frac{5}{8}$ (296)	$3\frac{1}{8}$ (79)	$6\frac{3}{16}$ (157)	$13\frac{5}{8}$ (346)	$3\frac{5}{8}$ (92)	$7\frac{5}{16}$ (186)	$14\frac{1}{8}$ (359)	$3\frac{3}{4}$ (95)	$7\frac{9}{16}$ (192)	$14\frac{5}{8}$ (372)	$3\frac{15}{16}$ (100)	$7\frac{13}{16}$ (199)	$15\frac{1}{8}$ (384)	$4\frac{1}{16}$ (103)	$8\frac{1}{16}$ (205)
	9 (228)	(Prefix)-09-30(*)12															
	12 (305)	(Prefix)-12-30(*)12															
	18 (457)	(Prefix)-18-30(*)12															
	24 (609)	(Prefix)-24-30(*)12															
	30 (762)	(Prefix)-30-30(*)12															
	36 (914)	(Prefix)-36-30(*)12															
	42 (1067)	(Prefix)-42-30(*)12															
24 (609)	6 (152)	(Prefix)-06-30(*)24	$17\frac{5}{8}$ (448)	$4\frac{11}{16}$ (120)	$9\frac{7}{16}$ (240)	$19\frac{5}{8}$ (499)	$5\frac{1}{4}$ (133)	$10\frac{1}{2}$ (267)	$20\frac{1}{8}$ (511	$5\frac{3}{8}$ (137)	$10\frac{3}{4}$ (273)	$20\frac{5}{8}$ (524)	$5\frac{1}{2}$ (140)	$11\frac{1}{16}$ (282)	$21\frac{1}{8}$ (537)	$5\frac{5}{8}$ (143)	$11\frac{5}{16}$ (287)
	9 (228)	(Prefix)-09-30(*)24															
	12 (305)	(Prefix)-12-30(*)24															
	18 (457)	(Prefix)-18-30(*)24															
	24 (609)	(Prefix)-24-30(*)24															
	30 (762)	(Prefix)-30-30(*)24															
	36 (914)	(Prefix)-36-30(*)24															
	42 (1067)	(Prefix)-42-30(*)24															
36 (914)	6 (152)	(Prefix)-06-30(*)36	$23\frac{5}{8}$ (600)	$6\frac{5}{16}$ (160)	$12\frac{5}{8}$ (321)	$25\frac{5}{8}$ (651)	$6\frac{7}{8}$ (174)	$13\frac{11}{16}$ (348)	$26\frac{1}{8}$ (663)	7 (175)	14 (356)	$26\frac{5}{8}$ (676)	$7\frac{1}{8}$ (181)	$14\frac{1}{4}$ (362)	$27\frac{1}{8}$ (689)	$7\frac{1}{4}$ (184)	$14\frac{1}{2}$ (287)
	9 (228)	(Prefix)-09-30(*)36															
	12 (305)	(Prefix)-12-30(*)36															
	18 (457)	(Prefix)-18-30(*)36															
	24 (609)	(Prefix)-24-30(*)36															
	30 (762)	(Prefix)-30-30(*)36															
	36 (914)	(Prefix)-36-30(*)36															
	42 (1067)	(Prefix)-42-30(*)36															
48 (1219)	6 (152)	(Prefix)-06-30(*)48	$29\frac{5}{8}$ (753)	$7\frac{15}{16}$ (202)	$15\frac{7}{8}$ (403)	$31\frac{5}{8}$ (803)	$8\frac{7}{16}$ (214)	$16\frac{15}{16}$ (430)	$32\frac{1}{8}$ (816)	$8\frac{5}{8}$ (219)	$17\frac{3}{16}$ (437)	$32\frac{5}{8}$ (829)	$8\frac{3}{4}$ (222)	$17\frac{1}{2}$ (445)	$33\frac{1}{8}$ (842)	$8\frac{7}{8}$ (226)	$17\frac{3}{4}$ (451)
	9 (228)	(Prefix)-09-30(*)48															
	12 (305)	(Prefix)-12-30(*)48															
	18 (457)	(Prefix)-18-30(*)48															
	24 (609)	(Prefix)-24-30(*)48															
	30 (762)	(Prefix)-30-30(*)48															
	36 (914)	(Prefix)-36-30(*)48															
	42 (1067)	(Prefix)-42-30(*)48															

(Prefix) See page AL-49 for catalog number prefix.
Manufacturing tolerances apply to all dimensions.

Vertical Tee Up/Down (VTU/VT)

2 pair splice plates with hardware included.

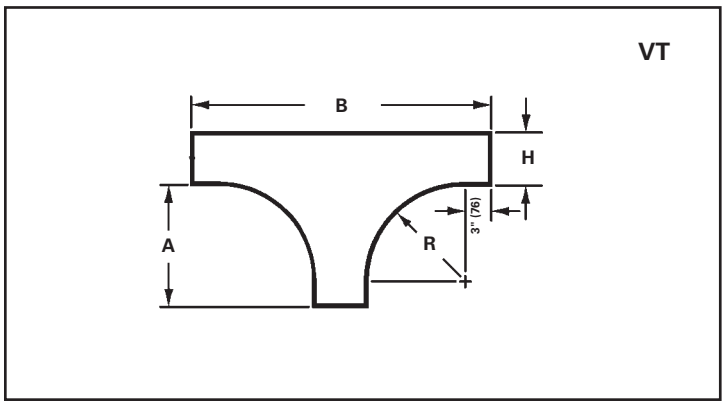

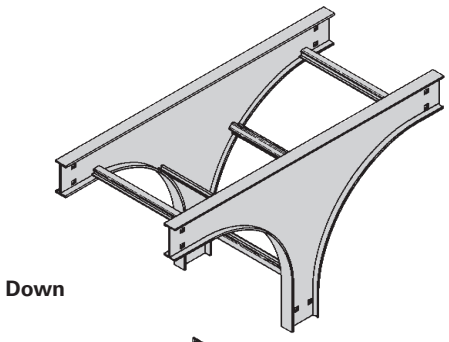

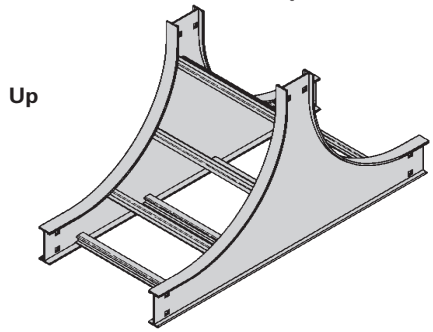

Bend Radius R in.	Ladder Width in. (mm)	Vertical Tee Down Catalog No.	Vertical Tee Up Catalog No.	Side Rail Height "H" 4" A in.	4" B in.	5" A in.	5" B in.	6" A in.	6" B in.	7" A in.	7" B in.
12 (305)	6 (152)	(Prefix)-06-VT12	(Prefix)-06-VTU12	15 (381)	34 (846)	15 (381)	35 (889)	15 (381)	36 (914)	15 (381)	37 (940)
	9 (228)	(Prefix)-09-VT12	(Prefix)-09-VTU12								
	12 (305)	(Prefix)-12-VT12	(Prefix)-12-VTU12								
	18 (457)	(Prefix)-18-VT12	(Prefix)-18-VTU12								
	24 (609)	(Prefix)-24-VT12	(Prefix)-24-VTU12								
	30 (762)	(Prefix)-30-VT12	(Prefix)-30-VTU12								
	36 (914)	(Prefix)-36-VT12	(Prefix)-36-VTU12								
	42 (1067)	(Prefix)-42-VT12	(Prefix)-42-VTU12								
24 (609)	6 (152)	(Prefix)-06-VT24	(Prefix)-06-VTU24	27 (6867)	58 (1473)	27 (686)	59 (1498)	27 (686)	60 (1524)	27 (686)	61 (1549)
	9 (228)	(Prefix)-09-VT24	(Prefix)-09-VTU24								
	12 (305)	(Prefix)-12-VT24	(Prefix)-12-VTU24								
	18 (457)	(Prefix)-18-VT24	(Prefix)-18-VTU24								
	24 (609)	(Prefix)-24-VT24	(Prefix)-24-VTU24								
	30 (762)	(Prefix)-30-VT24	(Prefix)-30-VTU24								
	36 (914)	(Prefix)-36-VT24	(Prefix)-36-VTU24								
	42 (1067)	(Prefix)-42-VT24	(Prefix)-42-VTU24								
36 (914)	6 (152)	(Prefix)-06-VT36	(Prefix)-06-VTU36	39 (991)	82 (2083)	39 (991)	83 (2108)	39 (991)	84 (2134)	39 (991)	85 (2159)
	9 (228)	(Prefix)-09-VT36	(Prefix)-09-VTU36								
	12 (305)	(Prefix)-12-VT36	(Prefix)-12-VTU36								
	18 (457)	(Prefix)-18-VT36	(Prefix)-18-VTU36								
	24 (609)	(Prefix)-24-VT36	(Prefix)-24-VTU36								
	30 (762)	(Prefix)-30-VT36	(Prefix)-30-VTU36								
	36 (914)	(Prefix)-36-VT36	(Prefix)-36-VTU36								
	42 (1067)	(Prefix)-42-VT36	(Prefix)-42-VTU36								
48 (1219)	6 (152)	(Prefix)-06-VT48	(Prefix)-06-VTU48	51 (1295)	106 (2692)	51 (1295)	107 (2718)	51 (1295)	108 (2743)	51 (1295)	109 (2769)
	9 (228)	(Prefix)-09-VT48	(Prefix)-09-VTU48								
	12 (305)	(Prefix)-12-VT48	(Prefix)-12-VTU48								
	18 (457)	(Prefix)-18-VT48	(Prefix)-18-VTU48								
	24 (609)	(Prefix)-24-VT48	(Prefix)-24-VTU48								
	30 (762)	(Prefix)-30-VT48	(Prefix)-30-VTU48								
	36 (914)	(Prefix)-36-VT48	(Prefix)-36-VTU48								
	42 (1067)	(Prefix)-42-VT48	(Prefix)-42-VTU48								

(Prefix) See page AL-49 for catalog number prefix.
Manufacturing tolerances apply to all dimensions.

Horizontal Wye (HYL, HYR)

2 pair splice plates with hardware included.

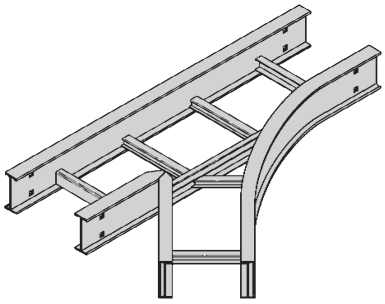

Left Hand Wye

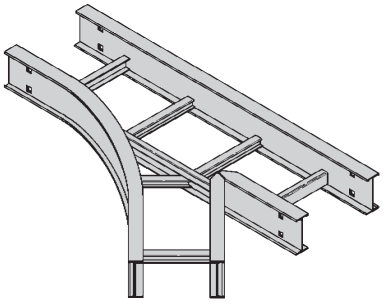

Right Hand Wye

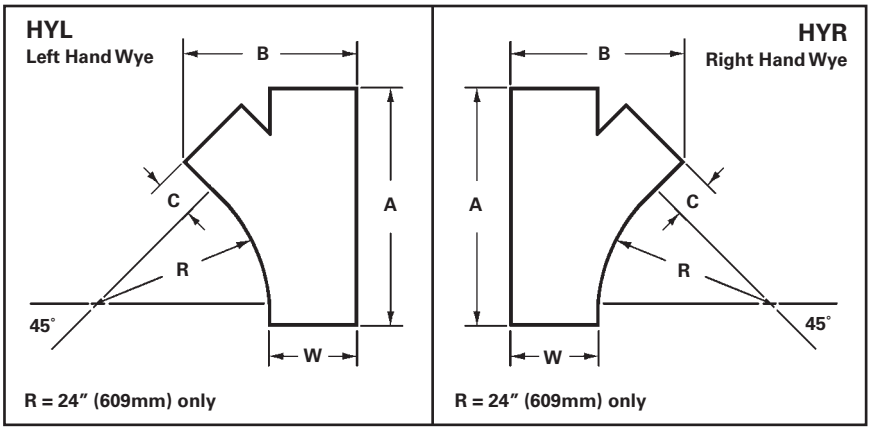

Bend Radius in.	(mm)	Ladder Width in.	(mm)	Left Hand Wye Catalog No.	Right Hand Wye Catalog No.	A in.	(mm)	B in.	(mm)	C in.	(mm)
24	(609)	6	152	**(Prefix)-06-HYL**	**(Prefix)-06-HYR**	28 7/16	722	15 3/16	386	3 1/16	77
		9	228	**(Prefix)-09-HYL**	**(Prefix)-09-HYR**	32 11/16	831	20 5/16	516	6 1/16	154
		12	305	**(Prefix)-12-HYL**	**(Prefix)-12-HYR**	36 15/16	938	25 7/16	646	9 1/16	231
		18	457	**(Prefix)-18-HYL**	**(Prefix)-18-HYR**	45 3/8	1153	35 15/16	910	15 1/16	383
		24	609	**(Prefix)-24-HYL**	**(Prefix)-24-HYR**	53 7/8	1368	45 15/16	1167	21 1/16	535
		30	762	**(Prefix)-30-HYL**	**(Prefix)-30-HYR**	62 3/8	1585	56 3/16	1427	27 1/16	688
		36	914	**(Prefix)-36-HYL**	**(Prefix)-36-HYR**	70 7/8	1800	66 7/16	1687	33 1/16	993
		42	1067	**(Prefix)-42-HYL**	**(Prefix)-42-HYR**	79 3/8	2016	76 5/8	1946	39 1/16	992

(Prefix) See page AL-49 for catalog number prefix.
Width dimensions are to inside wall. For aluminum fittings add 1.5 inches for total outside width.
Manufacturing tolerances apply to all dimensions.

Cable Support Fittings (CSF)

1 pair splice plates with hardware included.

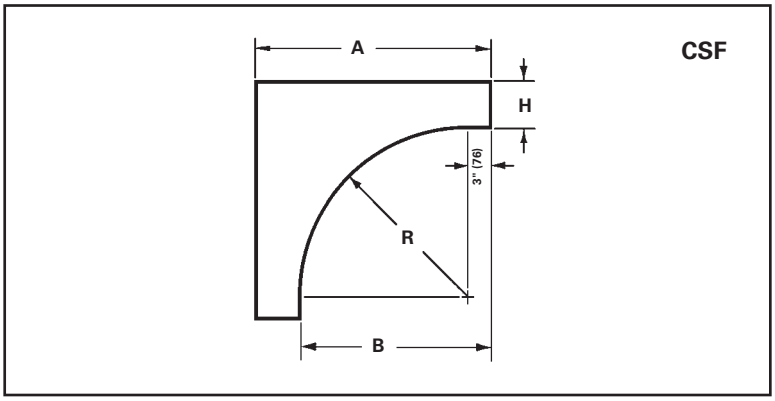

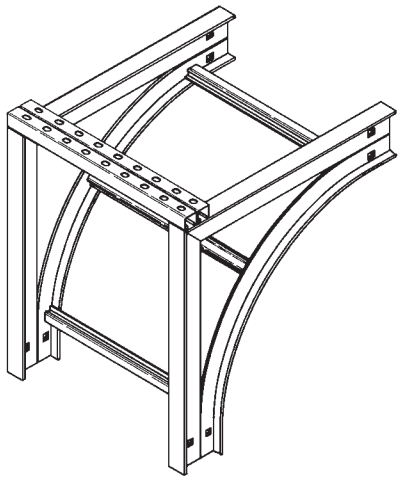

This fitting is recommended for use at the top of vertical runs to support the weight of the cables. The top cross brace is drilled for installing eyebolts, ordered separately.

Bend Radius R in.	Ladder Width in.	Ladder Width (mm)	Catalog No.	Side Rail Height "H" 4" A in.	4" B in.	5" A in.	5" B in.	6" A in.	6" B in.	7" A in.	7" B in.
12 (305)	6	(152)	**(Prefix)-06-CSF12**	19 (483)	15 (381)	20 (508)	15 (381)	21 (533)	15 (381)	22 (559)	15 (381)
	9	(228)	**(Prefix)-09-CSF12**								
	12	(305)	**(Prefix)-12-CSF12**								
	18	(457)	**(Prefix)-18-CSF12**								
	24	(609)	**(Prefix)-24-CSF12**								
	30	(762)	**(Prefix)-30-CSF12**								
	36	(914)	**(Prefix)-36-CSF12**								
	42	(1067)	**(Prefix)-42-CSF12**								
24 (609)	6	(152)	**(Prefix)-06-CSF24**	31 (787)	27 (686)	32 (813)	27 (686)	33 (838)	27 (686)	34 (864)	27 (686)
	9	(228)	**(Prefix)-09-CSF24**								
	12	(305)	**(Prefix)-12-CSF24**								
	18	(457)	**(Prefix)-18-CSF24**								
	24	(609)	**(Prefix)-24-CSF24**								
	30	(762)	**(Prefix)-30-CSF24**								
	36	(914)	**(Prefix)-36-CSF24**								
	42	(1067)	**(Prefix)-42-CSF24**								
36 (914)	6	(152)	**(Prefix)-06-CSF36**	43 (1092)	39 (991)	44 (1118)	39 (991)	45 (1143)	39 (991)	46 (1168)	39 (991)
	9	(228)	**(Prefix)-09-CSF36**								
	12	(305)	**(Prefix)-12-CSF36**								
	18	(457)	**(Prefix)-18-CSF36**								
	24	(609)	**(Prefix)-24-CSF36**								
	30	(762)	**(Prefix)-30-CSF36**								
	36	(914)	**(Prefix)-36-CSF36**								
	42	(1067)	**(Prefix)-42-CSF36**								
48 (1219)	6	(152)	**(Prefix)-06-CSF48**	55 (1397)	51 (1295)	56 (1422)	51 (1295)	57 (1448)	51 (1295)	58 (1473)	51 (1295)
	9	(228)	**(Prefix)-09-CSF48**								
	12	(305)	**(Prefix)-12-CSF48**								
	18	(457)	**(Prefix)-18-CSF48**								
	24	(609)	**(Prefix)-24-CSF48**								
	30	(762)	**(Prefix)-30-CSF48**								
	36	(914)	**(Prefix)-36-CSF48**								
	42	(1067)	**(Prefix)-42-CSF48**								

(Prefix) See page AL-49 for catalog number prefix.
Manufacturing tolerances apply to all dimensions.

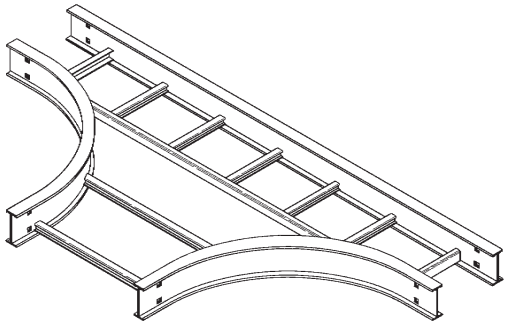

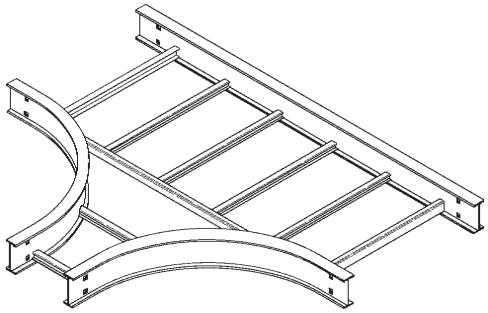

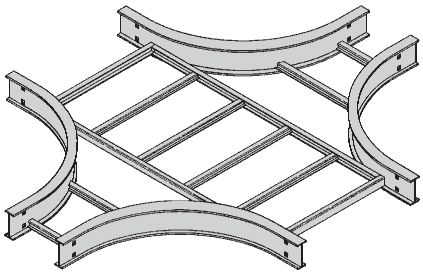

Fittings engineered with 3" tangents for splicing integrity.

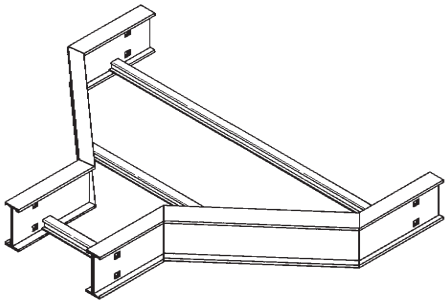

Reducer Fittings Part Numbering

Prefix Suffix

Example: **4 A - 24 - LR 12**

(9" rung spacing is standard)

Side Rail Height
4 = 4" (101)
5 = 5" (127)
6 = 6" (152)
7 = 7" (178)

Material
A= Aluminum

Width 1
09 = 9" (228)
12 = 12" (305)
18 = 18" (457)
24 = 24" (609)
30 = 30" (762)
36 = 36" (914)

Type
LR = Left Reducer Fitting
RR = Right Reducer Fitting
SR = Straight Reducer Fitting

Width 2
06 = 6" (152)
09 = 9" (228)
12 = 12" (305)
18 = 18" (457)
24 = 24" (609)
30 = 30" (762)

Expanding/Reducing Tee & Cross Fittings Part Numbering

Prefix Suffix

Example: **4 A - 24 - HT 12**

(9" rung spacing is standard)

Side Rail Height
4 = 4" (101)
5 = 5" (127)
6 = 6" (152)
7 = 7" (178)

Material
A= Aluminum

Width
06 = 6" (152)
09 = 9" (228)
12 = 12" (305)
18 = 18" (457)
24 = 24" (609)
30 = 30" (762)
36 = 36" (914)

Type
HT = Horizontal Tee Reducing
HT = Horizontal Tee Expanding
HX = Horizontal Cross Expanding/Reducing

Radius
12 = 12" (305)
24 = 24" (609)
36 = 36" (914)
48 = 48" (1219)

Note: Horizontal crosses and tees 30" or wider, with a radius of 36" or larger, will be of two-piece construction.

Reducers (LR, SR, RR)

1 pair splice plates with hardware included.

Reducer Part Numbering

Prefix - 24 - RR - 18

- 18 — $Width_2$
- RR — Fitting
- 24 — $Width_1$
- Prefix — Prefix

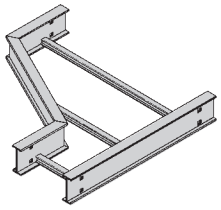

Left Reducer

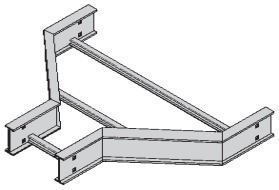

Straight Reducer

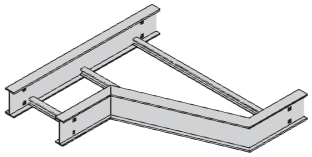

Right Reducer

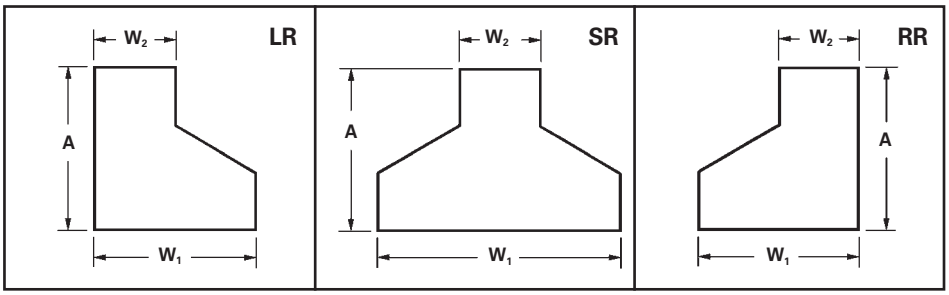

Ladder Width W1 in.	Ladder Width W1 mm	Ladder Width W2 in.	Ladder Width W2 mm	Left Hand Reducer Catalog No.	Left Hand Reducer A in.	Left Hand Reducer A mm	Straight Reducer Catalog No.	Straight Reducer A in.	Straight Reducer A mm	Right Hand Reducer Catalog No.	Right Hand Reducer A in.	Right Hand Reducer A mm
9	228	6	152	**(Prefix)-09-LR06**	9 3/4	248	**(Prefix)-09-SR06**	8 7/8	225	**(Prefix)-09-RR06**	9 3/4	248
12	305	6	152	**(Prefix)-12-LR06**	11 1/2	292	**(Prefix)-12-SR06**	9 3/4	248	**(Prefix)-12-RR06**	11 1/2	292
		9	228	**(Prefix)-12-LR09**	9 3/4	248	**(Prefix)-12-SR09**	8 7/8	225	**(Prefix)-12-RR09**	9 3/4	248
18	457	6	152	**(Prefix)-18-LR06**	14 15/16	379	**(Prefix)-18-SR06**	11 1/2	292	**(Prefix)-18-RR06**	14 15/16	379
		9	228	**(Prefix)-18-LR09**	13 3/16	340	**(Prefix)-18-SR09**	10 5/8	270	**(Prefix)-18-RR09**	13 3/16	340
		12	305	**(Prefix)-18-LR12**	11 1/2	292	**(Prefix)-18-SR12**	9 3/4	248	**(Prefix)-18-RR12**	11 1/2	292
24	609	6	152	**(Prefix)-24-LR06**	18 3/8	467	**(Prefix)-24-SR06**	13 3/16	340	**(Prefix)-24-RR06**	18 3/8	467
		9	228	**(Prefix)-24-LR09**	16 11/16	424	**(Prefix)-24-SR09**	12 3/8	314	**(Prefix)-24-RR09**	16 11/16	424
		12	305	**(Prefix)-24-LR12**	14 15/16	379	**(Prefix)-24-SR12**	11 1/2	292	**(Prefix)-24-RR12**	14 15/16	379
		18	457	**(Prefix)-24-LR18**	11 1/2	292	**(Prefix)-24-SR18**	9 3/4	248	**(Prefix)-24-RR18**	11 1/2	292
30	762	6	152	**(Prefix)-30-LR06**	21 7/8	555	**(Prefix)-30-SR06**	14 15/16	380	**(Prefix)-30-RR06**	21 7/8	555
		9	228	**(Prefix)-30-LR09**	20 1/8	511	**(Prefix)-30-SR09**	14 1/16	358	**(Prefix)-30-RR09**	20 1/8	511
		12	305	**(Prefix)-30-LR12**	18 3/8	462	**(Prefix)-30-SR12**	13 3/16	335	**(Prefix)-30-RR12**	18 3/8	462
		18	459	**(Prefix)-30-LR18**	14 15/16	380	**(Prefix)-30-SR18**	11 1/2	292	**(Prefix)-30-RR18**	14 15/16	380
		24	609	**(Prefix)-30-LR24**	11 1/2	292	**(Prefix)-30-SR24**	9 3/4	248	**(Prefix)-30-RR24**	11 1/2	292
36	914	6	152	**(Prefix)-36-LR06**	25 5/16	643	**(Prefix)-36-SR06**	16 11/16	424	**(Prefix)-36-RR06**	23 5/16	643
		9	228	**(Prefix)-36-LR09**	23 9/16	598	**(Prefix)-36-SR09**	15 13/16	402	**(Prefix)-36-RR09**	23 9/16	598
		12	305	**(Prefix)-36-LR12**	21 7/8	555	**(Prefix)-36-SR12**	14 15/16	380	**(Prefix)-36-RR12**	21 7/8	555
		18	457	**(Prefix)-36-LR18**	18 3/8	462	**(Prefix)-36-SR18**	13 3/16	335	**(Prefix)-36-RR18**	18 3/8	462
		24	609	**(Prefix)-36-LR24**	14 15/16	380	**(Prefix)-36-SR24**	11 1/2	292	**(Prefix)-36-RR24**	14 15/16	380
		30	762	**(Prefix)-36-LR30**	11 1/2	292	**(Prefix)-36-SR30**	9 3/4	248	**(Prefix)-36-RR30**	11 1/2	292
42	1067	6	152	**(Prefix)-42-LR06**	28 3/4	730	**(Prefix)-42-SR06**	18 3/8	467	**(Prefix)-42-RR06**	28 3/4	732
		9	228	**(Prefix)-42-LR09**	27 1/16	687	**(Prefix)-42-SR09**	17 1/2	445	**(Prefix)-42-RR09**	27 1/16	687
		12	305	**(Prefix)-42-LR12**	25 5/16	643	**(Prefix)-42-SR12**	16 11/16	424	**(Prefix)-42-RR12**	25 15/16	643
		18	457	**(Prefix)-42-LR18**	21 7/8	556	**(Prefix)-42-SR18**	14 15/16	379	**(Prefix)-42-RR18**	21 7/8	556
		24	609	**(Prefix)-42-LR24**	18 3/8	467	**(Prefix)-42-SR24**	13 3/16	335	**(Prefix)-42-RR24**	18 3/8	467
		30	762	**(Prefix)-42-LR30**	14 15/16	379	**(Prefix)-42-SR30**	11 1/2	292	**(Prefix)-42-RR30**	14 15/16	379
		36	914	**(Prefix)-42-LR36**	11 1/2	292	**(Prefix)-42-SR36**	9 3/4	249	**(Prefix)-42-RR36**	11 1/2	292

(Prefix) See page AL-60 for catalog number prefix.
Width dimensions are to inside wall. For aluminum fittings add 1.5 inches for total outside width.
Manufacturing tolerances apply to all dimensions.

Horizontal Reducing Tee (HT)

2 pair splice plates with hardware included.

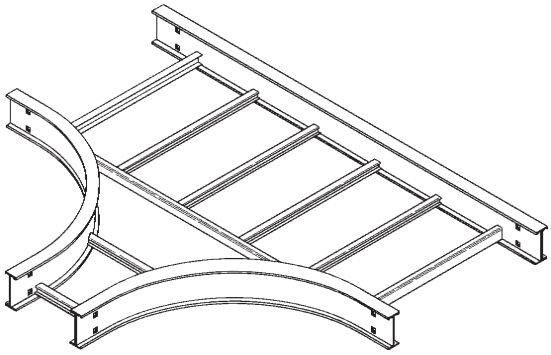

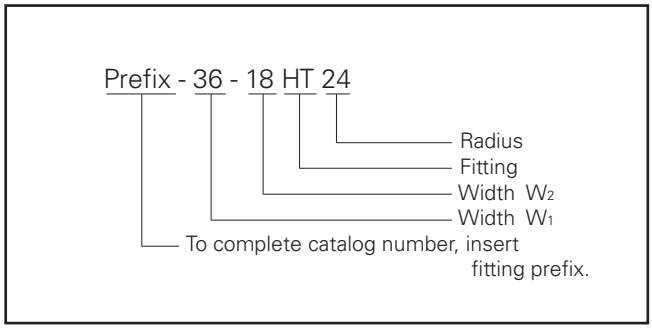

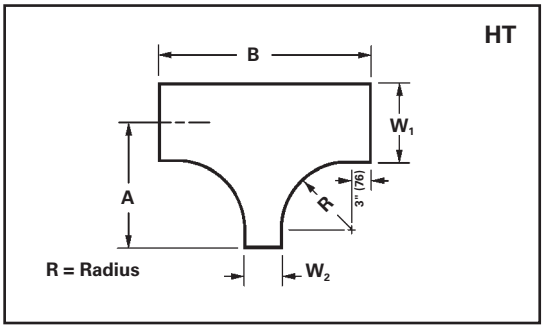

Ladder Width W1 in.	Ladder Width W1 mm	Ladder Width W2 in.	Ladder Width W2 mm	* Insert Radius (12", 24", 36", or 48") Catalog No.	12" Radius A in.	12" Radius A mm	12" Radius B in.	12" Radius B mm	24" Radius A in.	24" Radius A mm	24" Radius B in.	24" Radius B mm	36" Radius A in.	36" Radius A mm	36" Radius B in.	36" Radius B mm	48" Radius A in.	48" Radius A mm	48" Radius B in.	48" Radius B mm
9	228	6	152	**(Prefix)-09-06-HT***	19 1/2	496	36	914	31 1/2	800	60	1524	43	1092	84	2134	55 1/2	1410	108	2743
12	305	6	152	**(Prefix)-12-06-HT***	21	533	36	914	33	838	60	1524	45	1143	84	2134	57	1448	108	2743
		9	228	**(Prefix)-12-09-HT***	21	533	39	991	33	838	63	1600	45	1143	87	2210	57	1448	111	2819
18	475	6	152	**(Prefix)-18-06-HT***	24	609	36	914	36	914	60	1524	48	1219	84	2134	60	1524	108	2743
		9	228	**(Prefix)-18-09-HT***	24	609	39	991	36	914	63	1600	48	1219	87	2210	60	1524	111	2819
		12	305	**(Prefix)-18-12-HT***	24	609	42	1067	36	914	66	1676	48	1219	90	2286	60	1524	114	2496
24	609	6	152	**(Prefix)-24-06-HT***	27	686	36	914	39	991	60	1524	51	1295	84	2134	63	1600	108	2743
		9	228	**(Prefix)-24-09-HT***	27	686	39	991	39	991	63	1600	51	1295	87	2210	63	1600	111	2819
		12	305	**(Prefix)-24-12-HT***	27	686	42	1067	39	991	66	1676	51	1295	90	2286	63	1600	114	2496
		18	457	**(Prefix)-24-18-HT***	27	686	48	1219	39	991	72	1829	51	1295	96	2438	63	1600	120	3048
30	762	6	152	**(Prefix)-30-06-HT***	30	762	36	914	42	1067	60	1524	54	1372	84	2134	66	1676	108	2743
		9	228	**(Prefix)-30-09-HT***	30	762	39	991	42	1067	63	1600	54	1372	87	2210	66	1676	111	2819
		12	305	**(Prefix)-30-12-HT***	30	762	42	1067	42	1067	66	1676	54	1372	90	2286	66	1676	114	2496
		18	457	**(Prefix)-30-18-HT***	30	762	48	1219	42	1067	72	1829	54	1372	96	2438	66	1676	120	3048
		24	609	**(Prefix)-30-24-HT***	30	762	54	1372	42	1067	78	1981	54	1372	102	2591	66	1676	126	3200
36	914	6	152	**(Prefix)-36-06-HT***	33	838	36	914	45	1143	60	1524	57	1448	84	2134	69	1753	108	2743
		9	228	**(Prefix)-36-09-HT***	33	838	39	991	45	1143	63	1600	57	1448	87	2210	69	1753	111	2819
		12	305	**(Prefix)-36-12-HT***	33	838	42	1067	45	1143	66	1676	57	1448	90	2286	69	1753	114	2496
		18	457	**(Prefix)-36-18-HT***	33	838	48	1219	45	1143	72	1829	57	1448	96	2438	69	1753	120	3048
		24	609	**(Prefix)-36-24-HT***	33	838	54	1372	45	1143	78	1981	57	1448	102	2591	69	1753	126	3200
		30	762	**(Prefix)-36-30-HT***	33	838	60	1524	45	1143	84	2134	57	1448	108	2743	69	1753	132	3353
42	1067	6	152	**(Prefix)-42-06-HT***	36	914	36	914	48	1219	60	1524	60	1524	84	2134	72	1829	108	2743
		9	228	**(Prefix)-42-09-HT***	36	914	39	991	48	1219	63	1600	60	1524	87	2210	72	1829	111	2819
		12	305	**(Prefix)-42-12-HT***	36	914	42	1067	48	1219	66	1676	60	1524	90	2286	72	1829	114	2496
		18	457	**(Prefix)-42-18-HT***	36	914	48	1219	48	1219	72	1829	60	1524	96	2438	72	1829	120	3048
		24	609	**(Prefix)-42-24-HT***	36	914	54	1372	48	1219	78	1981	60	1524	102	2591	72	1829	126	3200
		30	762	**(Prefix)-42-30-HT***	36	914	60	1524	48	1219	84	2134	60	1524	108	2743	72	1829	132	3353
		36	914	**(Prefix)-42-36-HT***	36	914	66	1676	48	1219	90	2286	60	1524	114	2895	72	1829	138	3505

(Prefix) See page AL-60 for catalog number prefix.
Width dimensions are to inside wall. For aluminum fittings add 1.5 inches for total outside width.
Manufacturing tolerances apply to all dimensions.

Horizontal Expanding Tee (HT)

2 pair splice plates with hardware included.

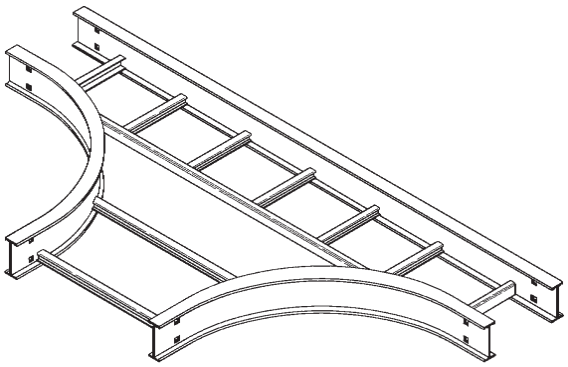

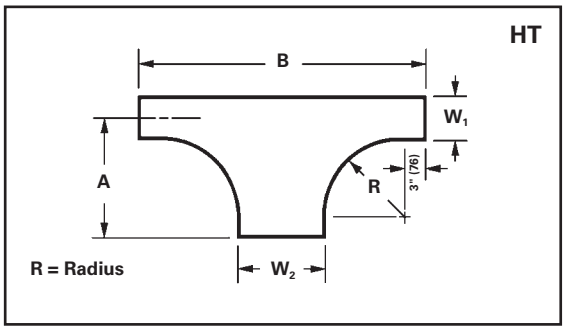

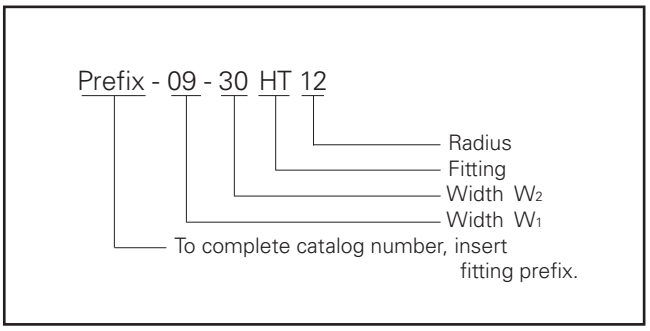

Ladder Width				* Insert Radius (12", 24", 36", or 48")	12" Radius				24" Radius				36" Radius				48" Radius			
W1		W2		Catalog No.	A		B		A		B		A		B		A		B	
in.	mm	in.	mm		in.	mm	in.	mm	in.	mm	in.	mm	in.	mm	in.	mm	in.	mm	in.	mm
6	152	9	228	**(Prefix)-06-09-HT***	18	457	39	991	30	762	63	1600	42	1067	87	2210	54	1372	111	2819
		12	305	**(Prefix)-06-12-HT***	18	457	42	1067	30	762	66	1676	42	1067	90	2286	54	1372	114	2496
		18	457	**(Prefix)-06-18-HT***	18	457	48	1219	30	762	72	1829	42	1067	96	2438	54	1372	120	3048
		24	609	**(Prefix)-06-24-HT***	18	457	54	1372	30	762	78	1981	42	1067	102	2591	54	1372	126	3200
		30	762	**(Prefix)-06-30-HT***	18	457	60	1524	30	762	84	2134	42	1067	108	2743	54	1372	132	3353
		36	914	**(Prefix)-06-36-HT***	18	457	66	1676	30	762	90	2286	42	1067	114	2895	54	1372	138	3503
		42	1067	**(Prefix)-06-42-HT***	18	457	72	1829	30	762	96	2438	42	1067	120	3048	54	1372	144	3658
9	228	12	305	**(Prefix)-09-12-HT***	19½	496	42	1067	31½	800	66	1676	43½	1105	90	2286	55½	1410	114	2496
		18	457	**(Prefix)-09-18-HT***	19½	496	48	1219	31½	800	72	1829	43½	1105	96	2438	55½	1410	120	3048
		24	609	**(Prefix)-09-24-HT***	19½	496	54	1372	31½	800	78	1981	43½	1105	102	2591	55½	1410	126	3200
		30	762	**(Prefix)-09-30-HT***	19½	496	60	1524	31½	800	84	2134	43½	1105	108	2743	55½	1410	132	3353
		36	914	**(Prefix)-09-36-HT***	19½	496	66	1676	31½	800	90	2286	43½	1105	114	2895	55½	1410	138	3503
		42	1067	**(Prefix)-09-42-HT***	19½	496	72	1829	31½	800	96	2438	43½	1105	120	3048	55½	1410	144	3658
12	305	18	457	**(Prefix)-12-18-HT***	21	533	48	1219	33	838	72	1829	45	1143	96	2438	57	1448	120	3048
		24	609	**(Prefix)-12-24-HT***	21	533	54	1372	33	838	78	1981	45	1143	102	2591	57	1448	126	3200
		30	762	**(Prefix)-12-30-HT***	21	533	60	1524	33	838	84	2134	45	1143	108	2743	57	1448	132	3353
		36	914	**(Prefix)-12-36-HT***	21	533	66	1676	33	838	90	2286	45	1143	114	2895	57	1448	138	3503
		42	1067	**(Prefix)-12-42-HT***	21	533	72	1829	33	838	96	2438	45	1143	120	3048	57	1448	144	3658
18	457	24	609	**(Prefix)-18-24-HT***	24	609	54	1372	36	914	78	1981	48	1219	102	2591	60	1524	126	3200
		30	762	**(Prefix)-18-30-HT***	24	609	60	1524	36	914	84	2134	48	1219	108	2743	60	1524	132	3353
		36	914	**(Prefix)-18-36-HT***	24	609	66	1676	36	914	90	2286	48	1219	114	2895	60	1524	138	3503
		42	1067	**(Prefix)-18-42-HT***	24	609	72	1829	36	914	96	2438	48	1219	120	3048	60	1524	144	3658
24	609	30	762	**(Prefix)-24-30-HT***	27	686	60	1524	39	991	84	2134	51	1295	108	2743	63	1600	132	3353
		36	914	**(Prefix)-24-36-HT***	27	686	66	1676	39	991	90	2286	51	1295	114	2895	63	1600	138	3503
		42	1067	**(Prefix)-24-42-HT***	27	686	72	1829	39	991	96	2438	51	1295	120	3048	63	1600	144	3658
30	762	36	914	**(Prefix)-30-36-HT***	30	762	66	1676	42	1067	90	2286	54	1372	114	2895	66	1676	138	3503
		42	1067	**(Prefix)-30-42-HT***	30	762	72	1829	42	1067	96	2438	54	1372	120	3048	66	1676	144	3658
36	914	42	1067	**(Prefix)-36-42-HT***	33	838	72	1829	45	1143	96	2438	57	1448	120	3048	69	1753	144	3658

(Prefix) See page AL-60 for catalog number prefix.
Width dimensions are to inside wall. For aluminum fittings add 1.5 inches for total outside width.
Manufacturing tolerances apply to all dimensions.

Horizontal Expanding/Reducing Cross (HX)

3 pair splice plates with hardware included.

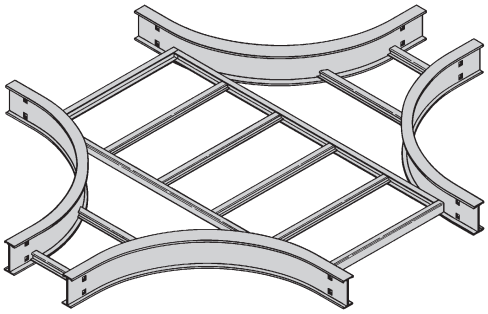

Prefix - 36 - 18 HX 24

- Radius
- Fitting
- Width W_2
- Width W_1
- To complete catalog number, insert fitting prefix.

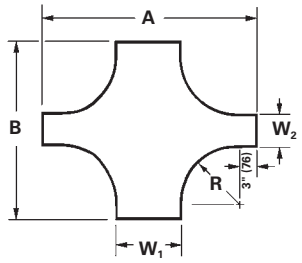

Ladder Width				* Insert Radius (12", 24", 36", or 48")	12" Radius				24" Radius				36" Radius				48" Radius			
W1		W2		Catalog No.	A		B		A		B		A		B		A		B	
in.	mm	in.	mm		in.	mm	in.	mm	in.	mm	in.	mm	in.	mm	in.	mm	in.	mm	in.	mm
9	228	6	152	**(Prefix)-09-06-HX***	39	991	36	914	63	1600	60	1372	87	2210	84	2134	111	2819	108	2743
12	305	6	152	**(Prefix)-12-06-HX***	42	1067	36	914	66	1676	60	1372	90	2286	84	2134	114	2896	108	2743
		9	228	**(Prefix)-12-09-HX***	42	1067	39	991	66	1676	63	1600	90	2286	87	2210	114	2896	111	2819
18	457	6	152	**(Prefix)-18-06-HX***	48	1219	36	914	72	1829	60	1372	96	2438	84	2134	120	3048	108	2743
		9	228	**(Prefix)-18-09-HX***	48	1219	39	991	72	1829	63	1600	96	2438	87	2210	120	3048	111	2819
		12	305	**(Prefix)-18-12-HX***	48	1219	42	1067	72	1829	66	1676	96	2438	90	2286	120	3048	114	2896
24	609	6	152	**(Prefix)-24-06-HX***	54	1372	36	914	78	1981	60	1372	102	2591	84	2134	126	3200	108	2743
		9	228	**(Prefix)-24-09-HX***	54	1372	39	991	78	1981	63	1600	102	2591	87	2210	126	3200	111	2819
		12	305	**(Prefix)-24-12-HX***	54	1372	42	1067	78	1981	66	1676	102	2591	90	2286	126	3200	114	2896
		18	457	**(Prefix)-24-18-HX***	54	1372	48	1219	78	1981	72	1829	102	2591	96	2438	126	3200	120	3048
30	762	6	152	**(Prefix)-30-06-HX***	60	1524	36	914	84	2134	60	1372	108	2743	84	2134	132	3353	108	2743
		9	228	**(Prefix)-30-09-HX***	60	1524	39	991	84	2134	63	1600	108	2743	87	2210	132	3353	111	2819
		12	305	**(Prefix)-30-12-HX***	60	1524	42	1067	84	2134	66	1676	108	2743	90	2286	132	3353	114	2896
		18	457	**(Prefix)-30-18-HX***	60	1524	48	1219	84	2134	72	1829	108	2743	96	2438	132	3353	120	3048
		24	609	**(Prefix)-30-24-HX***	60	1524	54	1372	84	2134	78	1981	108	2743	102	2591	132	3353	126	3200
36	914	6	152	**(Prefix)-36-06-HX***	66	1676	36	914	90	2286	60	1372	114	2896	84	2134	138	3505	108	2743
		9	228	**(Prefix)-36-09-HX***	66	1676	39	991	90	2286	63	1600	114	2896	87	2210	138	3505	111	2819
		12	305	**(Prefix)-36-12-HX***	66	1676	42	1067	90	2286	66	1676	114	2896	90	2286	138	3505	114	2896
		18	457	**(Prefix)-36-18-HX***	66	1676	48	1219	90	2286	72	1829	114	2896	96	2438	138	3505	120	3048
		24	609	**(Prefix)-36-24-HX***	66	1676	54	1372	90	2286	78	1981	114	2896	102	2591	138	3505	126	3200
		30	762	**(Prefix)-36-30-HX***	66	1676	60	1524	90	2286	84	2134	114	2896	108	2743	138	3505	132	3353
42	1067	6	152	**(Prefix)-42-06-HX***	72	1829	36	914	96	2438	60	1372	120	3048	84	2134	144	3658	108	2743
		9	228	**(Prefix)-42-09-HX***	72	1829	39	991	96	2438	63	1600	120	3048	87	2210	144	3658	111	2819
		12	305	**(Prefix)-42-12-HX***	72	1829	42	1067	96	2438	66	1676	120	3048	90	2286	144	3658	114	2896
		18	457	**(Prefix)-42-18-HX***	72	1829	48	1219	96	2438	72	1829	120	3048	96	2438	144	3658	120	3048
		24	609	**(Prefix)-42-24-HX***	72	1829	54	1372	96	2438	78	1981	120	3048	102	2591	144	3658	126	3200
		30	762	**(Prefix)-42-30-HX***	72	1829	60	1524	96	2438	84	2134	120	3048	108	2743	144	3658	132	3353
		36	914	**(Prefix)-42-36-HX***	72	1829	66	1676	96	2438	90	2286	120	3048	114	2896	144	3658	138	3505

(Prefix) See page AL-60 for catalog number prefix.
Width dimensions are to inside wall. For aluminum fittings add 1.5 inches for total outside width.
Manufacturing tolerances apply to all dimensions.

Straight Sections See pages GRP-3 & GRP-4
Straight Section Covers See page GRP-19

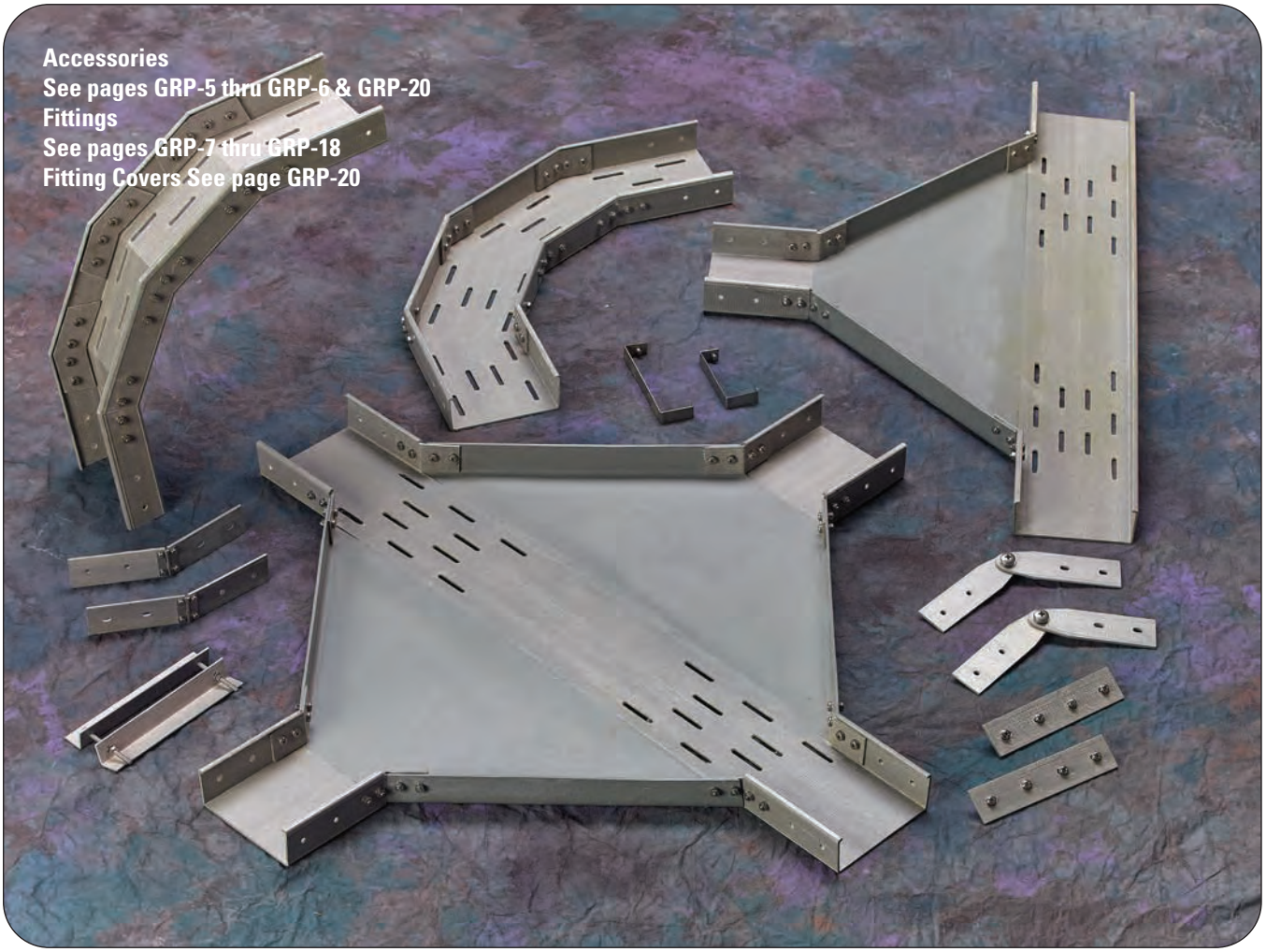
Accessories
See pages GRP-5 thru GRP-6 & GRP-20
Fittings
See pages GRP-7 thru GRP-18
Fitting Covers See page GRP-20

Perforated & Solid Cable Tray

Profiles

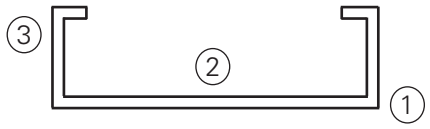

90° Inside Flange

1. Single piece construction
2. Solid or perforated bottoms provide continuous support
3. Labeled on every piece to show
   - Part Number
   - Company Name
   - Order Number
   - Material
4. Multiple resins available for every application

Splices -- providing system integrity

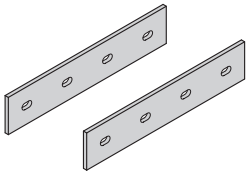

Splices -- the engineered connection:
- Match material of tray
- Solid pultruded design
- Supplied with 316 stainless steel hardware

Resin Types

Polyester Resin

- Lightest and most cost effective resin
- Tested to ASTM E662, UL 94, ASTM E84, and ASTM D635 for Fire Resistance Performance
- UV Resistant Per ISO 4582

Zero Halogen Resin

- Meets all performance characteristics of polyester resin above
- IEC 754 Certified for Low Smoke, Zero Halogen

Options available

- Carbon Veil - Meets dis-Stat requirements for ABS Certification Tested to CENELEC BS EN 50014, ASTM D257
- Slotted Rungs: Class Y Free base area per IEC 61537 available

Fiberglass Cable Tray Straight Section Part Numbering

Prefix

Example: **P 050 V C F SS - 150 - 3000**

Tray Type	Height	Bottom Type	Flange Type*	Material	Type	Width	Length
P = Pan Tray	**050** = 50mm††	**V** = Perforated **S** = Solid	**C** = 90°	**F** = Polyester Resin **FZ** = Zero Halogen Resin **FD** = Polyester Resin w/ Carbon Surface Veil **FH** = Zero Halogen Resin w/ Carbon Surface Veil	**SS** = Straight Section	**050** = 50mm† **075** = 75mm **100** = 100mm **150** = 150mm **200** = 200mm **300** = 300mm **450** = 450mm	**3000** = 3000mm

† No flange available upon request
†† **050** available in **050** through **450** widths

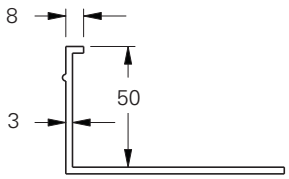

P050 Perforated shown

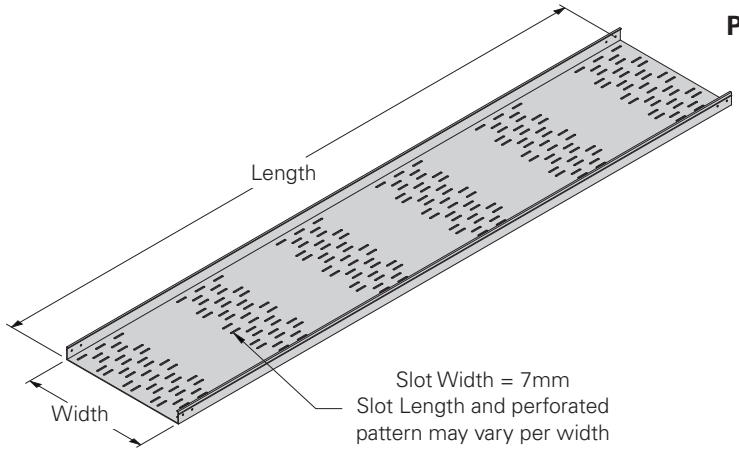

P050 Solid shown

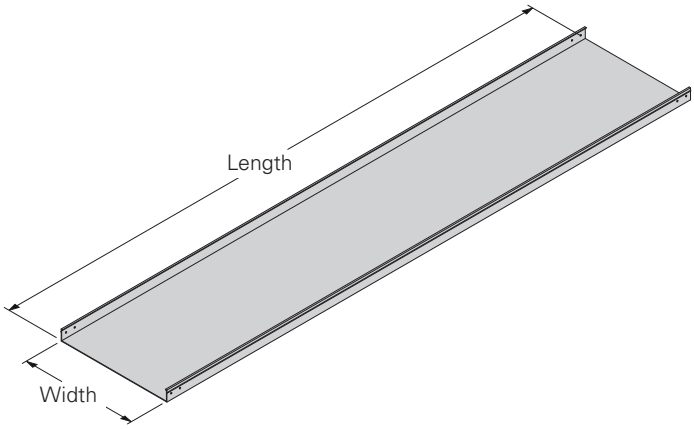

Dimensions are in millimeters unless otherwise specified.

Fiberglass Cable Tray Straight Section Part Numbering

Prefix

Example: **P 100 V C F SS - 150 - 3000**

Tray Type	Height	Bottom Type	Flange Type*	Material	Type	Width	Length
P = Pan Tray	**100** = 100mm††	**V** = Perforated **S** = Solid	**C** = 90°	**F** = Polyester Resin **FZ** = Zero Halogen Resin **FD** = Polyester Resin w/ Carbon Surface Veil **FH** = Zero Halogen Resin w/ Carbon Surface Veil	**SS** = Straight Section	**150** = 150mm **200** = 200mm **300** = 300mm **600** = 600mm	**3000** = 3000mm

† No flange available upon request
†† **100** available in **150** through **600** widths

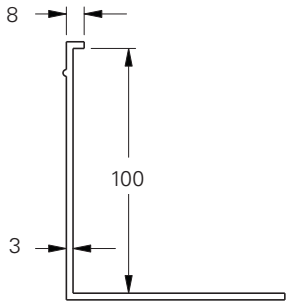

P100 Perforated shown

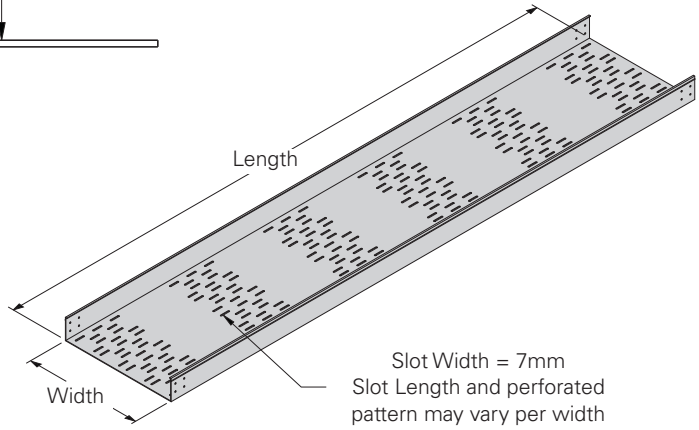

P100 Solid shown

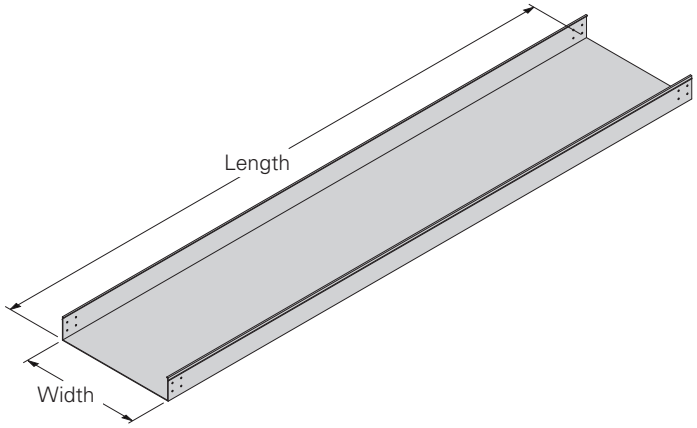

Fiberglass

Dimensions are in millimeters unless otherwise specified.

Fiberglass Cable Tray - Accessories

Side Splice Plates (Outside mount)

(Sold in Pairs With Hardware)

- ** Insert F, FZ, FD, or FH

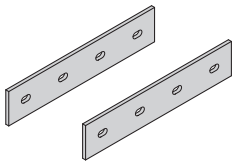

Part Number	Tray Height
PSP050**	50
PSP100**	100

Expansion Splice Plates (Outside mount)

(Sold in Pairs With Hardware)

- ** Insert F, FZ, FD, or FH

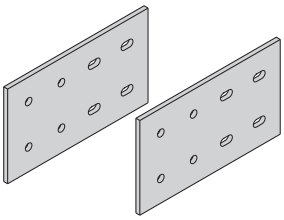

Part Number	Tray Height
PEP100**	100

Horizontal Adjustable Splice Plates (Outside mount)

(Sold in Pairs With Hardware)

- ** Insert F, FZ, FD, or FH
- Requires mitering of trays and drilling new splice plate holes on inside angle

Example:
40° bend requires
20° miter each end

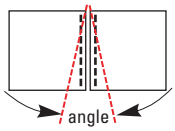

Miter 1/2 the required angle on each tray end

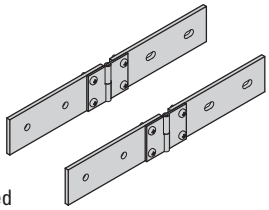

Part Number	Tray Height
PHAM050**	50
PHAM100**	100

Vertical Adjustable Splice Plates (Outside mount)

(Sold in Pairs With Hardware)

- ** Insert F, FZ, FD, or FH

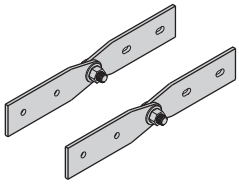

Part Number	Tray Height
PVA050**	50
PVA100**	100

Blind-End

(Sold Individually With Hardware)

- ** Insert F, FZ, FD, or FH
- (W) - Insert tray width

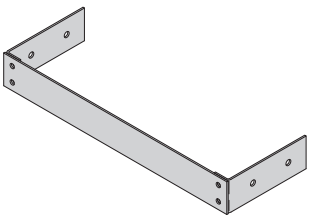

Part Number	Tray Height
PBE050**(W)	50
PBE100**(W)	100

Barriers

- Furnished with #10 x ½" self-drilling stainless steel screws

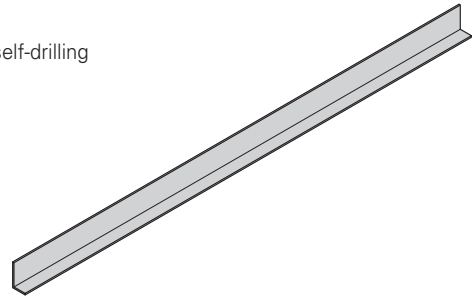

Catalog No.	Side Rail Height mm	Length mm
PSD050(Δ)-1500	50	1500
PSD050(Δ)-3000	50	3000
PSD100(Δ)-1500	100	1500
PSD100(Δ)-3000	100	3000

Horizontal Hold Downs

(Sold in Pairs With Hardware)

- Stainless Steel 316

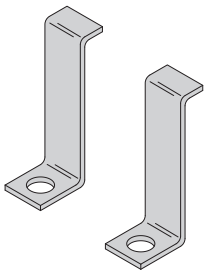

Part Number	Tray Height
PHC050SS6	50
PHC100SS6	100

Vertical Hold Downs

(Sold in Pairs With Hardware)

- Stainless Steel 316

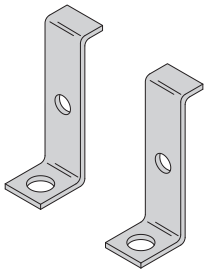

Part Number	Tray Height
PVC050SS6	50
PVC100SS6	100

Accessory Hardware

- Stainless Steel 316

Part Number	Item
M6 x 12.5 STS SS6	Self Tapping Screw
M6 SFHN (*)	Serrated Flange Hex Nut

Fiberglass

(Δ) See page GRP-3 for material selection

Dimensions are in millimeters unless otherwise specified.

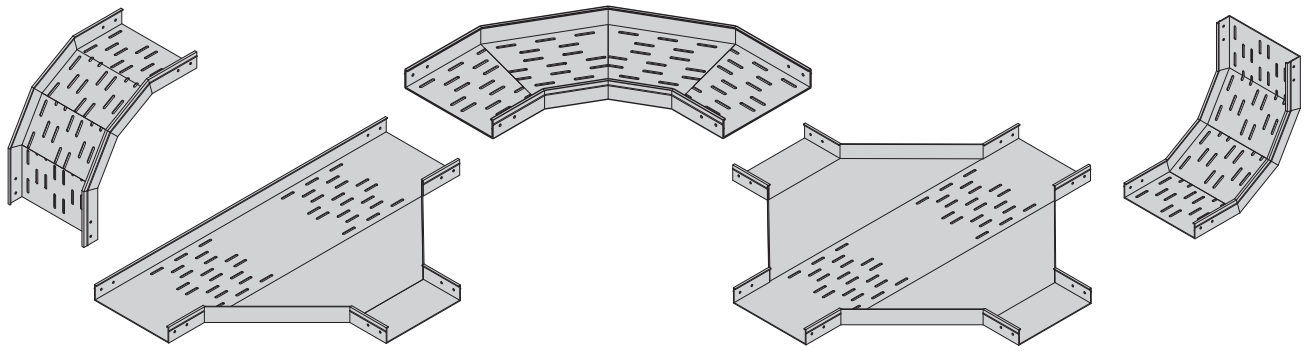

Fiberglass Cable Tray Fittings Part Numbering

Prefix | Suffix

Example: **P 050 V C F HB - 150 - 90 R600**

Tray Type	Height††	Bottom Type	Flange Type*	Material	Fitting Type	Width	Angle	Radius
P = Pan Tray	**050** = 50mm **100** = 100mm	**V** = Perforated **S** = Solid	**C** = 90°	**F** = Polyester Resin **FZ** = Zero Halogen Resin **FD** = Polyester Resin w/ Carbon Surface Veil **FH** = Zero Halogen Resin w/ Carbon Surface Veil	**HB** = Horz. Bend **HT** = Horz. Tee† **HX** = Horz. Cross† **VO** = Vert. Outside **VI** = Vert. Inside	**050** = 50mm **075** = 75mm **100** = 100mm **150** = 150mm **200** = 200mm **300** = 300mm **450** = 450mm **600** = 600mm	30° 45° 60° 90°	**R300** = 300mm **R600** = 600mm

† No angle designation required on these fittings
†† **050** available in **050** through **450** widths
†† **100** available in **150** through **600** widths

Fiberglass Cable Tray Reducer Fittings Part Numbering

Prefix | Suffix

Example: **P 050 V C F - 300 - SR - 100**

Tray Type	Height††	Bottom Type	Flange Type*	Material	Width 1	Fitting Type	Width 2
P = Pan Tray	**050** = 50mm **100** = 100mm	**V** = Perforated **S** = Solid	**C** = 90°	**F** = Polyester Resin **FZ** = Zero Halogen Resin **FD** = Polyester Resin w/ Carbon Surface Veil **FH** = Zero Halogen Resin w/ Carbon Surface Veil	**075** = 75mm **100** = 100mm **150** = 150mm **200** = 200mm **300** = 300mm **450** = 450mm **600** = 600mm	**LR** = Left Reducer **SR** = Straight Reducer **RR** = Right Reducer	**050** = 50mm **075** = 75mm **100** = 100mm **150** = 150mm **200** = 200mm **300** = 300mm **450** = 450mm

†† **050** available in **050** through **450** widths
†† **100** available in **150** through **600** widths

Horizontal Bend 90° (HB)

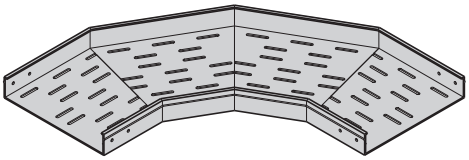

One pair of splice plates with SS6 hardware included.

- R - Bend Radius mm	Tray Width mm	90˚ Horizontal Bend - Mitered Catalog No.	Dimensions A mm	B mm
300	50*	(Prefix)HB-050-90R300	450	450
	75*	(Prefix)HB-075-90R300	475	475
	100*	(Prefix)HB-100-90R300	500	500
	150	(Prefix)HB-150-90R300	550	550
	200	(Prefix)HB-200-90R300	600	600
	300	(Prefix)HB-300-90R300	700	700
	450*	(Prefix)HB-450-90R300	850	850
	600**	(Prefix)HB-600-90R300	1000	1000
600	50*	(Prefix)HB-050-90R600	750	750
	75*	(Prefix)HB-075-90R600	775	775
	100*	(Prefix)HB-100-90R600	800	800
	150	(Prefix)HB-150-90R600	850	850
	200	(Prefix)HB-200-90R600	900	900
	300	(Prefix)HB-300-90R600	1000	1000
	450*	(Prefix)HB-450-90R600	1150	1150
	600**	(Prefix)HB-600-90R600	1300	1300

* Only available in 050 (50mm) height
** Only available in 100 (100mm) height

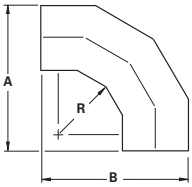

90˚ Mitered

Prefix - HB - 150 - 90 R300
- R300: Radius
- 90: Angle
- 150: Width
- HB: Fitting
- Prefix: To complete catalog number, insert fitting prefix.

(Prefix) See page GRP-7 for catalog number prefix.
Dimensions for reference only, when critical contact factory.

Fiberglass

Dimensions are in millimeters unless otherwise specified.

Horizontal Bend 60° (HB)

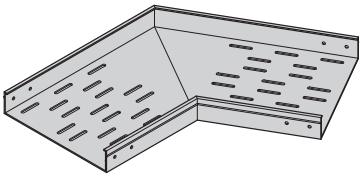

One pair of splice plates with SS6 hardware included.

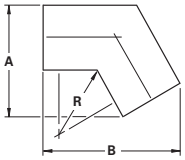

60˚ Mitered

Prefix - HB - 150 - 60 R300
- Radius
- Angle
- Width
- Fitting
- To complete catalog number, insert fitting prefix.

(Prefix) See page GRP-7 for catalog number prefix. Dimensions for reference only, when critical contact factory.

- R - Bend Radius mm	Tray Width mm	60˚ Horizontal Bend - Mitered Catalog No.	Dimensions A mm	Dimensions B mm
300	50*	**(Prefix)HB-050-60R300**	296	453
	75*	**(Prefix)HB-075-60R300**	312	475
	100*	**(Prefix)HB-100-60R300**	346	496
	150	**(Prefix)HB-150-60R300**	396	540
	200	**(Prefix)HB-200-60R300**	446	583
	300	**(Prefix)HB-300-60R300**	546	670
	450*	**(Prefix)HB-450-60R300**	696	800
	600**	**(Prefix)HB-600-60R300**	846	929
600	50*	**(Prefix)HB-050-60R600**	446	713
	75*	**(Prefix)HB-075-60R600**	462	735
	100*	**(Prefix)HB-100-60R600**	496	756
	150	**(Prefix)HB-150-60R600**	546	800
	200	**(Prefix)HB-200-60R600**	596	843
	300	**(Prefix)HB-300-60R600**	696	929
	450*	**(Prefix)HB-450-60R600**	846	1059
	600**	**(Prefix)HB-600-60R600**	996	1189

* Only available in 050 (50mm) height
** Only available in 100 (100mm) height

Fiberglass

Horizontal Bend 45° (HB)

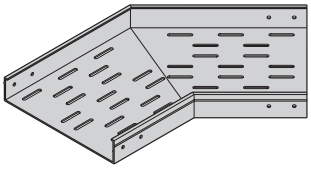

One pair of splice plates with SS6 hardware included.

- R - Bend Radius mm	Tray Width mm	45° Horizontal Bend - Mitered Catalog No.	Dimensions A mm	Dimensions B mm
300	50*	(Prefix)HB-050-45R300	209	418
	75*	(Prefix)HB-075-45R300	234	436
	100*	(Prefix)HB-100-45R300	259	454
	150	(Prefix)HB-150-45R300	309	489
	200	(Prefix)HB-200-45R300	359	524
	300	(Prefix)HB-300-45R300	459	595
	450*	(Prefix)HB-450-45R300	609	701
	600**	(Prefix)HB-600-45R300	759	807
600	50*	(Prefix)HB-050-45R600	296	630
	75*	(Prefix)HB-075-45R600	321	648
	100*	(Prefix)HB-100-45R600	346	666
	150	(Prefix)HB-150-45R600	396	701
	200	(Prefix)HB-200-45R600	446	736
	300	(Prefix)HB-300-45R600	546	807
	450*	(Prefix)HB-450-45R600	696	913
	600**	(Prefix)HB-600-45R600	846	1019

* Only available in 050 (50mm) height
** Only available in 100 (100mm) height

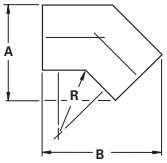

45° Mitered

Prefix - HB - 150 - 45 R300
- Radius
- Angle
- Width
- Fitting
- To complete catalog number, insert fitting prefix.

(Prefix) See page GRP-7 for catalog number prefix.
Dimensions for reference only, when critical contact factory.

Fiberglass

Dimensions are in millimeters unless otherwise specified.

Horizontal Bend 30° (HB)

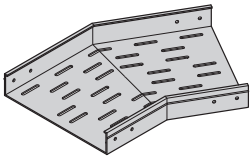

One pair of splice plates with SS6 hardware included.

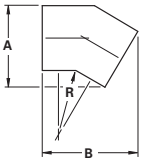

30˚ Mitered

Prefix - HB - 150 - 30 R300
- Radius
- Angle
- Width
- Fitting
- To complete catalog number, insert fitting prefix.

(Prefix) See page GRP-7 for catalog number prefix. Dimensions for reference only, when critical contact factory.

- R - Bend Radius mm	Tray Width mm	30˚ Horizontal Bend - Mitered Catalog No.	Dimensions A mm	Dimensions B mm
300	50*	**(Prefix)HB-050-30R300**	140	362
	75*	**(Prefix)HB-075-30R300**	165	374
	100*	**(Prefix)HB-100-30R300**	190	387
	150	**(Prefix)HB-150-30R300**	240	412
	200	**(Prefix)HB-200-30R300**	290	437
	300	**(Prefix)HB-300-30R300**	390	487
	450*	**(Prefix)HB-450-30R300**	540	562
	600**	**(Prefix)HB-600-30R300**	690	637
600	50*	**(Prefix)HB-050-30R600**	180	512
	75*	**(Prefix)HB-075-30R600**	205	524
	100*	**(Prefix)HB-100-30R600**	230	537
	150	**(Prefix)HB-150-30R600**	280	562
	200	**(Prefix)HB-200-30R600**	330	587
	300	**(Prefix)HB-300-30R600**	430	637
	450*	**(Prefix)HB-450-30R600**	580	712
	600**	**(Prefix)HB-600-30R600**	730	787

* Only available in 050 (50mm) height
** Only available in 100 (100mm) height

Horizontal Tee (HT)

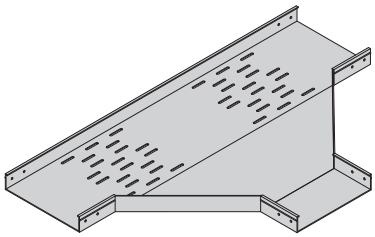

Two pair of splice plates with SS6 hardware included.

- R - Bend Radius mm	Tray Width mm	Horizontal Tee - Mitered Catalog No.	Dimensions A mm	Dimensions B mm
300	50*	**(Prefix)HT-050-R300**	500	950
	75*	**(Prefix)HT-075-R300**	525	975
	100*	**(Prefix)HT-100-R300**	550	1000
	150	**(Prefix)HT-150-R300**	600	1050
	200	**(Prefix)HT-200-R300**	650	1100
	300	**(Prefix)HT-300-R300**	750	1200
	450*	**(Prefix)HT-450-R300**	900	1350
	600**	**(Prefix)HT-600-R300**	1050	1500
600	50*	**(Prefix)HT-050-R600**	800	1550
	75*	**(Prefix)HT-075-R600**	825	1575
	100*	**(Prefix)HT-100-R600**	850	1600
	150	**(Prefix)HT-150-R600**	900	1650
	200	**(Prefix)HT-200-R600**	950	1700
	300	**(Prefix)HT-300-R600**	1050	1800
	450*	**(Prefix)HT-450-R600**	1200	1950
	600**	**(Prefix)HT-600-R600**	1350	2100

* Only available in 050 (50mm) height
** Only available in 100 (100mm) height

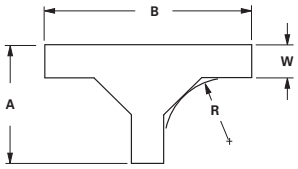

Mitered Tee

Prefix - HT - 200 - R300
- Radius
- Width
- Fitting
- To complete catalog number, insert fitting prefix.

(Prefix) See page GRP-7 for catalog number prefix.
Dimensions for reference only, when critical contact factory.

Fiberglass

Dimensions are in millimeters unless otherwise specified.

Horizontal Cross (HX)

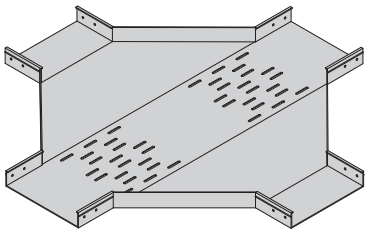

Three pair of splice plates with SS6 hardware included.

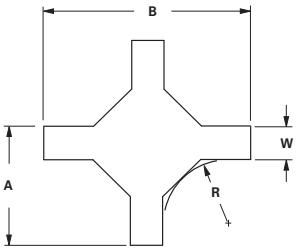

Mitered Cross

Prefix - HX - 200 - R300
- Radius
- Width
- Fitting
- To complete catalog number, insert fitting prefix.

(Prefix) See page GRP-7 for catalog number prefix.
Dimensions for reference only, when critical contact factory.

- R - Bend Radius mm	Tray Width mm	Horizontal Cross - Mitered Catalog No.	Dimensions A mm	Dimensions B mm
300	50*	**(Prefix)HX-050-R300**	500	950
	75*	**(Prefix)HX-075-R300**	525	975
	100*	**(Prefix)HX-100-R300**	550	1000
	150	**(Prefix)HX-150-R300**	600	1050
	200	**(Prefix)HX-200-R300**	650	1100
	300	**(Prefix)HX-300-R300**	750	1200
	450*	**(Prefix)HX-450-R300**	900	1350
	600**	**(Prefix)HX-600-R300**	1050	1500
600	50*	**(Prefix)HX-050-R600**	800	1550
	75*	**(Prefix)HX-075-R600**	825	1575
	100*	**(Prefix)HX-100-R600**	850	1600
	150	**(Prefix)HX-150-R600**	900	1650
	200	**(Prefix)HX-200-R600**	950	1700
	300	**(Prefix)HX-300-R600**	1050	1800
	450*	**(Prefix)HX-450-R600**	1200	1950
	600**	**(Prefix)HX-600-R600**	1350	2100

* Only available in 050 (50mm) height
** Only available in 100 (100mm) height

Reducers (LR) (SR) (RR)

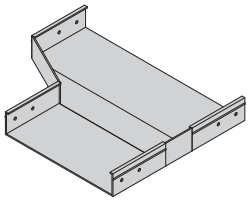

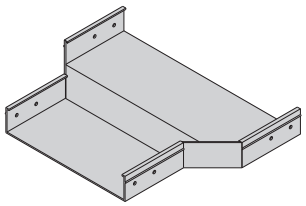

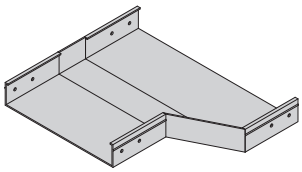

One pair of splice plates with SS6 hardware included.

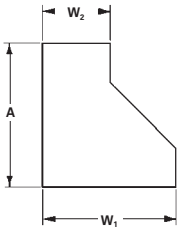

Left Reducer

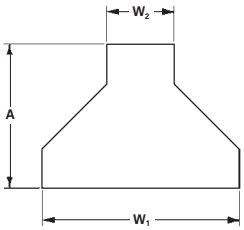

Straight Reducer

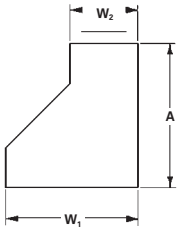

Right Reducer

Reducers are all of mitered construction.

(Prefix) See page GRP-7 for catalog number prefix.
Dimensions for reference only, when critical contact factory.

Prefix - 300 - SR 200
- Width$_2$ W_2
- Fitting
- Width$_1$ W_1
- To complete catalog number, insert fitting prefix.

Tray Width		Left Hand Reducer		Straight Reducer		Right Hand Reducer	
W_1 mm	W_2 mm	Catalog No.	A mm	Catalog No.	A mm	Catalog No.	A mm
75*	50*	**(Prefix)-075-LR-050**	312.5	**(Prefix)-075-SR-050**	312.5	**(Prefix)-075-RR-050**	312.5
100	50*	**(Prefix)-100-LR-050**	325	**(Prefix)-100-SR-050**	325	**(Prefix)-100-RR-050**	325
	75*	**(Prefix)-100-LR-075**	312.5	**(Prefix)-100-SR-075**	312.5	**(Prefix)-100-RR-075**	312.5
150	50*	**(Prefix)-150-LR-050**	350	**(Prefix)-150-SR-050**	350	**(Prefix)-150-RR-050**	350
	75*	**(Prefix)-150-LR-075**	337.5	**(Prefix)-150-SR-075**	337.5	**(Prefix)-150-RR-075**	337.5
	100*	**(Prefix)-150-LR-100**	325	**(Prefix)-150-SR-100**	325	**(Prefix)-150-RR-100**	325
200	50*	**(Prefix)-200-LR-050**	375	**(Prefix)-200SR-050**	375	**(Prefix)-200-RR-050**	375
	75*	**(Prefix)-200-LR-075**	362.5	**(Prefix)-200SR-075**	362.5	**(Prefix)-200-RR-075**	362.5
	100*	**(Prefix)-200-LR-100**	350	**(Prefix)-200SR-100**	350	**(Prefix)-200-RR-100**	350
	150	**(Prefix)-200-LR-150**	325	**(Prefix)-200SR-150**	325	**(Prefix)-200-RR-150**	325
300	50*	**(Prefix)-300-LR-050**	425	**(Prefix)-300-SR-050**	425	**(Prefix)-300-RR-050**	425
	75*	**(Prefix)-300-LR-075**	412.5	**(Prefix)-300-SR-075**	412.5	**(Prefix)-300-RR-075**	412.5
	100*	**(Prefix)-300-LR-100**	400	**(Prefix)-300-SR-100**	400	**(Prefix)-300-RR-100**	400
	150	**(Prefix)-300-LR-150**	375	**(Prefix)-300-SR-150**	375	**(Prefix)-300-RR-150**	375
	200	**(Prefix)-300-LR-200**	350	**(Prefix)-300-SR-200**	350	**(Prefix)-300-RR-200**	350
450	50*	**(Prefix)-450-LR-050**	500	**(Prefix)-450-SR-050**	500	**(Prefix)-450-RR-050**	500
	75*	**(Prefix)-450-LR-075**	487.5	**(Prefix)-450-SR-075**	487.5	**(Prefix)-450-RR-075**	487.5
	100*	**(Prefix)-450-LR-100**	475	**(Prefix)-450-SR-100**	475	**(Prefix)-450-RR-100**	475
	150	**(Prefix)-450-LR-150**	450	**(Prefix)-450-SR-150**	450	**(Prefix)-450-RR-150**	450
	200	**(Prefix)-450-LR-200**	425	**(Prefix)-450-SR-200**	425	**(Prefix)-450-RR-200**	425
	300	**(Prefix)-450-LR-300**	375	**(Prefix)-450-SR-300**	375	**(Prefix)-450-RR-300**	375
600**	150	**(Prefix)-600-LR-150**	525	**(Prefix)-600-SR-150**	525	**(Prefix)-600-RR-150**	525
	200	**(Prefix)-600-LR-200**	500	**(Prefix)-600-SR-200**	500	**(Prefix)-600-RR-200**	500
	300	**(Prefix)-600-LR-300**	450	**(Prefix)-600-SR-300**	450	**(Prefix)-600-RR-300**	450
	450	**(Prefix)-600-LR-450**	375	**(Prefix)-600-SR-450**	375	**(Prefix)-600-RR-450**	375

* Only available in 050 (50mm) height
** Only available in 100 (100mm) height

Dimensions are in millimeters unless otherwise specified.

Vertical Bends 90° (VO) (VI)

Vertical Outside Bend

VO

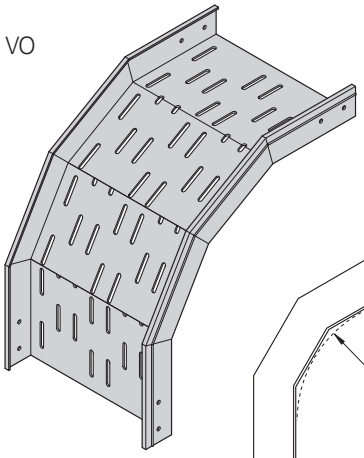

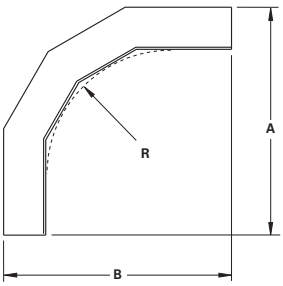

90˚ (VO) Mitered

Vertical Inside Bend

VI

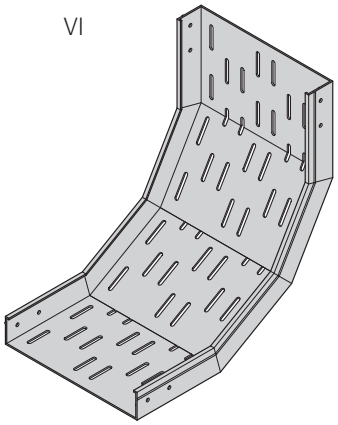

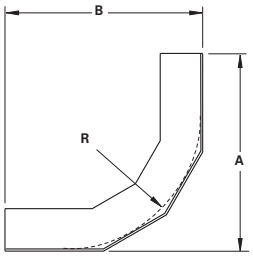

90˚ (VI) Mitered

Prefix VO - 150 - 90 R300
- Radius
- Angle
- Width
- Fitting
- To complete catalog number, insert fitting prefix.

One pair of splice plates with SS6 hardware included.

(Prefix) See page GRP-7 for catalog number prefix.
Dimensions for reference only, when critical contact factory.

Prefix VI - 150 - 90 R300
- Radius
- Angle
- Width
- Fitting
- To complete catalog number, insert fitting prefix.

- R - Bend Radius mm	Tray Width mm	Catalog No.	90˚ VO Mitered 050 Height A mm	90˚ VO Mitered 050 Height B mm	90˚ VO Mitered 100 Height A mm	90˚ VO Mitered 100 Height B mm	90˚ VI Mitered 050 Height A mm	90˚ VI Mitered 050 Height B mm	90˚ VI Mitered 100 Height A mm	90˚ VI Mitered 100 Height B mm
300	50*	(Prefix)(*)-050-90R300	450	450	510	510	450	450	510	510
	75*	(Prefix)(*)-075-90R300								
	100*	(Prefix)(*)-100-90R300								
	150	(Prefix)(*)-150-90R300								
	200	(Prefix)(*)-200-90R300								
	300	(Prefix)(*)-300-90R300								
	450*	(Prefix)(*)-450-90R300								
	600**	(Prefix)(*)-600-90R300								
600	50*	(Prefix)(*)-050-90R600	750	750	810	810	750	750	810	810
	75*	(Prefix)(*)-075-90R600								
	100*	(Prefix)(*)-100-90R600								
	150	(Prefix)(*)-150-90R600								
	200	(Prefix)(*)-200-90R600								
	300	(Prefix)(*)-300-90R600								
	450*	(Prefix)(*)-450-90R600								
	600**	(Prefix)(*)-600-90R600								

* Only available in 050 (50mm) height
** Only available in 100 (100mm) height

Fiberglass

Dimensions are in millimeters unless otherwise specified.

Vertical Bends 60° (VO) (VI)

Vertical Outside Bend

VO

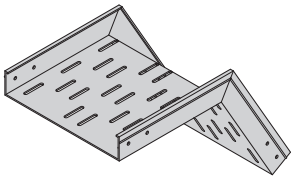

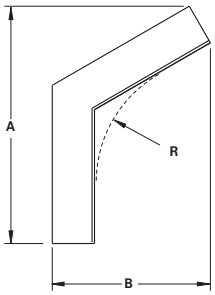

60˚ (VO) Mitered

Vertical Inside Bend

VI

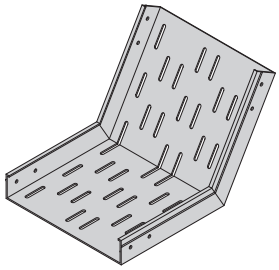

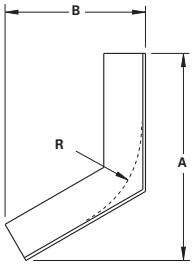

60˚ (VI) Mitered

Prefix VO - 150 - 60 R300
- Radius
- Angle
- Width
- Fitting
- To complete catalog number, insert fitting prefix.

One pair of splice plates with SS6 hardware included.

(Prefix) See page GRP-7 for catalog number prefix.
Dimensions for reference only, when critical contact factory.

Prefix VI - 150 - 60 R300
- Radius
- Angle
- Width
- Fitting
- To complete catalog number, insert fitting prefix.

- R - Bend Radius mm	Tray Width mm	Catalog No.	60˚ VO Mitered 050 Height A mm	60˚ VO Mitered 050 Height B mm	60˚ VO Mitered 100 Height A mm	60˚ VO Mitered 100 Height B mm	60˚ VI Mitered 050 Height A mm	60˚ VI Mitered 050 Height B mm	60˚ VI Mitered 100 Height A mm	60˚ VI Mitered 100 Height B mm
300	50*	**(Prefix)(*)-050-60R300**	453	287	505	347	410	262	410	292
	75*	**(Prefix)(*)-075-60R300**								
	100*	**(Prefix)(*)-100-60R300**								
	150	**(Prefix)(*)-150-60R300**								
	200	**(Prefix)(*)-200-60R300**								
	300	**(Prefix)(*)-300-60R300**								
	450*	**(Prefix)(*)-450-60R300**								
	600**	**(Prefix)(*)-600-60R300**								
600	50*	**(Prefix)(*)-050-60R600**	713	437	765	497	670	412	670	442
	75*	**(Prefix)(*)-075-60R600**								
	100*	**(Prefix)(*)-100-60R600**								
	150	**(Prefix)(*)-150-60R600**								
	200	**(Prefix)(*)-200-60R600**								
	300	**(Prefix)(*)-300-60R600**								
	450*	**(Prefix)(*)-450-60R600**								
	600**	**(Prefix)(*)-600-60R600**								

* Only available in 050 (50mm) height
** Only available in 100 (100mm) height

Fiberglass

Dimensions are in millimeters unless otherwise specified.

Vertical Bends 45° (VO) (VI)

Vertical Outside Bend

VO

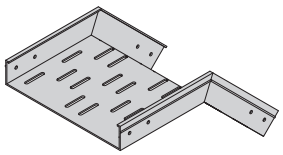

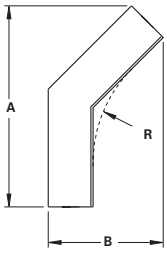

45˚ (VO) Mitered

Vertical Inside Bend

VI

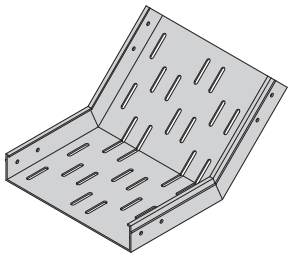

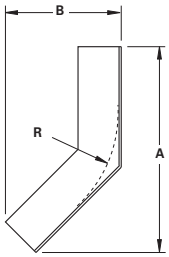

45˚ (VI) Mitered

Prefix VO - 150 - 45 R300
- Radius
- Angle
- Width
- Fitting
- To complete catalog number, insert fitting prefix.

One pair of splice plates with SS6 hardware included.

(Prefix) See page GRP-7 for catalog number prefix.
Dimensions for reference only, when critical contact factory.

Prefix VI - 150 - 45 R300
- Radius
- Angle
- Width
- Fitting
- To complete catalog number, insert fitting prefix.

- R - Bend Radius mm	Tray Width mm	Catalog No.	45˚ VO Mitered 050 Height A mm	45˚ VO Mitered 050 Height B mm	45˚ VO Mitered 100 Height A mm	45˚ VO Mitered 100 Height B mm	45˚ VI Mitered 050 Height A mm	45˚ VI Mitered 050 Height B mm	45˚ VI Mitered 100 Height A mm	45˚ VI Mitered 100 Height B mm
300	50*	(Prefix)(*)-050-45R300	418	209	461	269	383	194	383	236
	75*	(Prefix)(*)-075-45R300								
	100*	(Prefix)(*)-100-45R300								
	150	(Prefix)(*)-150-45R300								
	200	(Prefix)(*)-200-45R300								
	300	(Prefix)(*)-300-45R300								
	450*	(Prefix)(*)-450-45R300								
	600**	(Prefix)(*)-600-45R300								
600	50*	(Prefix)(*)-050-45R600	630	296	673	356	595	282	595	324
	75*	(Prefix)(*)-075-45R600								
	100*	(Prefix)(*)-100-45R600								
	150	(Prefix)(*)-150-45R600								
	200	(Prefix)(*)-200-45R600								
	300	(Prefix)(*)-300-45R600								
	450*	(Prefix)(*)-450-45R600								
	600**	(Prefix)(*)-600-45R600								

* Only available in 050 (50mm) height
** Only available in 100 (100mm) height

Dimensions are in millimeters unless otherwise specified.

Vertical Bends 30° (VO) (VI)

Vertical Outside Bend

VO

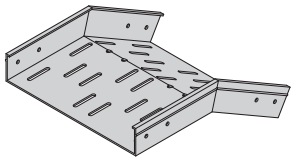

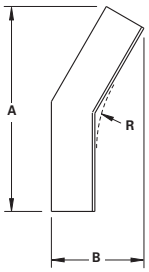

30˚ (VO) Mitered

Vertical Inside Bend

VI

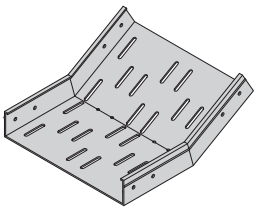

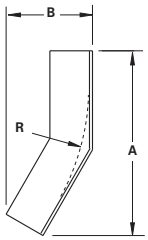

30˚ (VI) Mitered

Prefix VO - 150 - 30 R300
- Radius
- Angle
- Width
- Fitting
- To complete catalog number, insert fitting prefix.

One pair of splice plates with SS6 hardware included.

(Prefix) See page GRP-7 for catalog number prefix.
Dimensions for reference only, when critical contact factory.

Prefix VI - 150 - 30 R300
- Radius
- Angle
- Width
- Fitting
- To complete catalog number, insert fitting prefix.

- R - Bend Radius mm	Tray Width mm	Catalog No.	30˚ VO Mitered 050 Height A mm	30˚ VO Mitered 050 Height B mm	30˚ VO Mitered 100 Height A mm	30˚ VO Mitered 100 Height B mm	30˚ VI Mitered 050 Height A mm	30˚ VI Mitered 050 Height B mm	30˚ VI Mitered 100 Height A mm	30˚ VI Mitered 100 Height B mm
300	50*	**(Prefix)(*)-050-30R300**	362	140	392	200	337	133	337	185
	75*	**(Prefix)(*)-075-30R300**								
	100*	**(Prefix)(*)-100-30R300**								
	150	**(Prefix)(*)-150-30R300**								
	200	**(Prefix)(*)-200-30R300**								
	300	**(Prefix)(*)-300-30R300**								
	450*	**(Prefix)(*)-450-30R300**								
	600**	**(Prefix)(*)-600-30R300**								
600	50*	**(Prefix)(*)-050-30R600**	512	180	542	240	487	174	487	226
	75*	**(Prefix)(*)-075-30R600**								
	100*	**(Prefix)(*)-100-30R600**								
	150	**(Prefix)(*)-150-30R600**								
	200	**(Prefix)(*)-200-30R600**								
	300	**(Prefix)(*)-300-30R600**								
	450*	**(Prefix)(*)-450-30R600**								
	600**	**(Prefix)(*)-600-30R600**								

* Only available in 050 (50mm) height
** Only available in 100 (100mm) height

Fiberglass

Dimensions are in millimeters unless otherwise specified.

Covers

Material Thickness: ⅛" (3mm)

Cover Length: 10' (3m)

Standard Mounting Hardware:
(10 each) #10 x ½" stainless, self drilling screws provided with each section

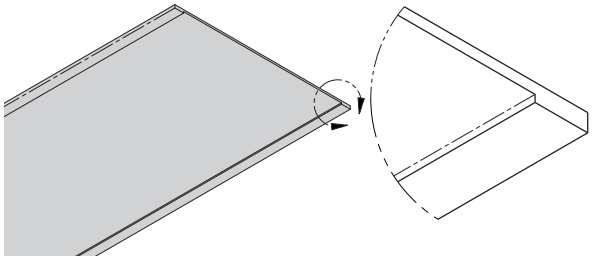

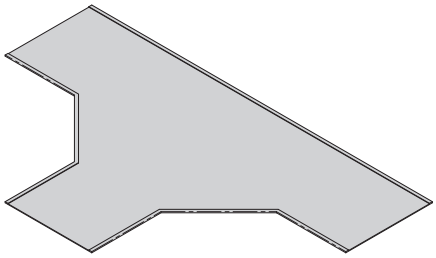

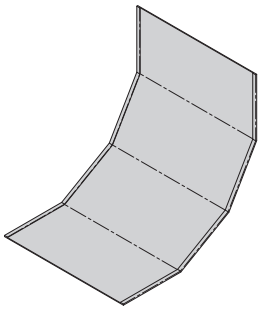

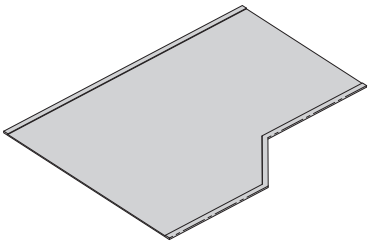

Fiberglass Cable Tray Straight Section Covers Part Numbering

Example: **PCF S F SS - 150 - 3000**

Prefix: PCF S F — Suffix: SS - 150 - 3000

Tray Type	Top Style	Material	Type	Width	Length
PCF = Cable Tray Cover Fiberglass	**S** = Solid	**F** = Polyester Resin **FZ** = Zero Halogen Resin **FD** = Polyester Resin w/ Carbon Surface Veil **FH** = Zero Halogen Resin w/ Carbon Surface Veil	**SS** = Straight Section	**050** = 50mm **100** = 100mm **150** = 150mm **200** = 200mm **300** = 300mm **450** = 450mm **600** = 600mm	**3000** = 3000mm

Quantity of Cover Clamps Required	
Straight Section 3000mm	2 pcs.
Horizontal/Vertical Bends	2 pcs.
Tees	3 pcs.
Crosses	4 pcs.

Fiberglass

Dimensions are in millimeters unless otherwise specified.

Fiberglass Cable Tray Fitting Covers Part Numbering

Prefix — Suffix

Example: **PCF S F VO - 150 - 90 R600 - 050** **(side rail height)**

Tray Type
PCF = Cable Tray Cover Fiberglass

Top Style
S = Solid

Material
F = Polyester Resin
FZ = Zero Halogen Resin
FD = Polyester Resin w/ Carbon Surface Veil
FH = Zero Halogen Resin w/ Carbon Surface Veil

HB **Insert HB Suffix from pages GRP-8 – GRP-11**
HT **Insert HT Suffix from page GRP-12**
HX **Insert HX Suffix from page GRP-13**
LR **Insert LR Suffix from page GRP-14**
SR **Insert SR Suffix from page GRP-14**
RR **Insert RR Suffix from page GRP-14**
VI **Insert VI Suffix from pages GRP-15 – GRP-18**
VO **Insert VO Suffix from pages GRP-15 – GRP-18 & Side Rail Height**

Wrap Around Cover Clamp

Recommended for outdoor service.
- W = ladder width
- Heavy duty cover clamp available for flat covers only

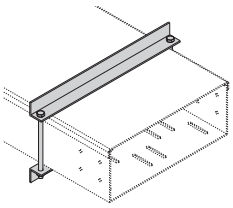

Catalog No.	Side Rail Height mm
PWCC050(Δ)(W)	50
PWCC100(Δ)(W)	100

Thermo Plastic Drive Rivet

Shipped in packages of 25 pcs.

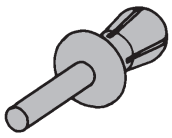

Catalog No.
TPDR

Material Designations
(Δ) Insert one of the following material designations from chart on page GRP-19 when required.

Fiberglass

Dimensions are in millimeters unless otherwise specified.

Straight Sections See pages GRP-23 thru GRP-26
Straight Section Covers See page GRP-42

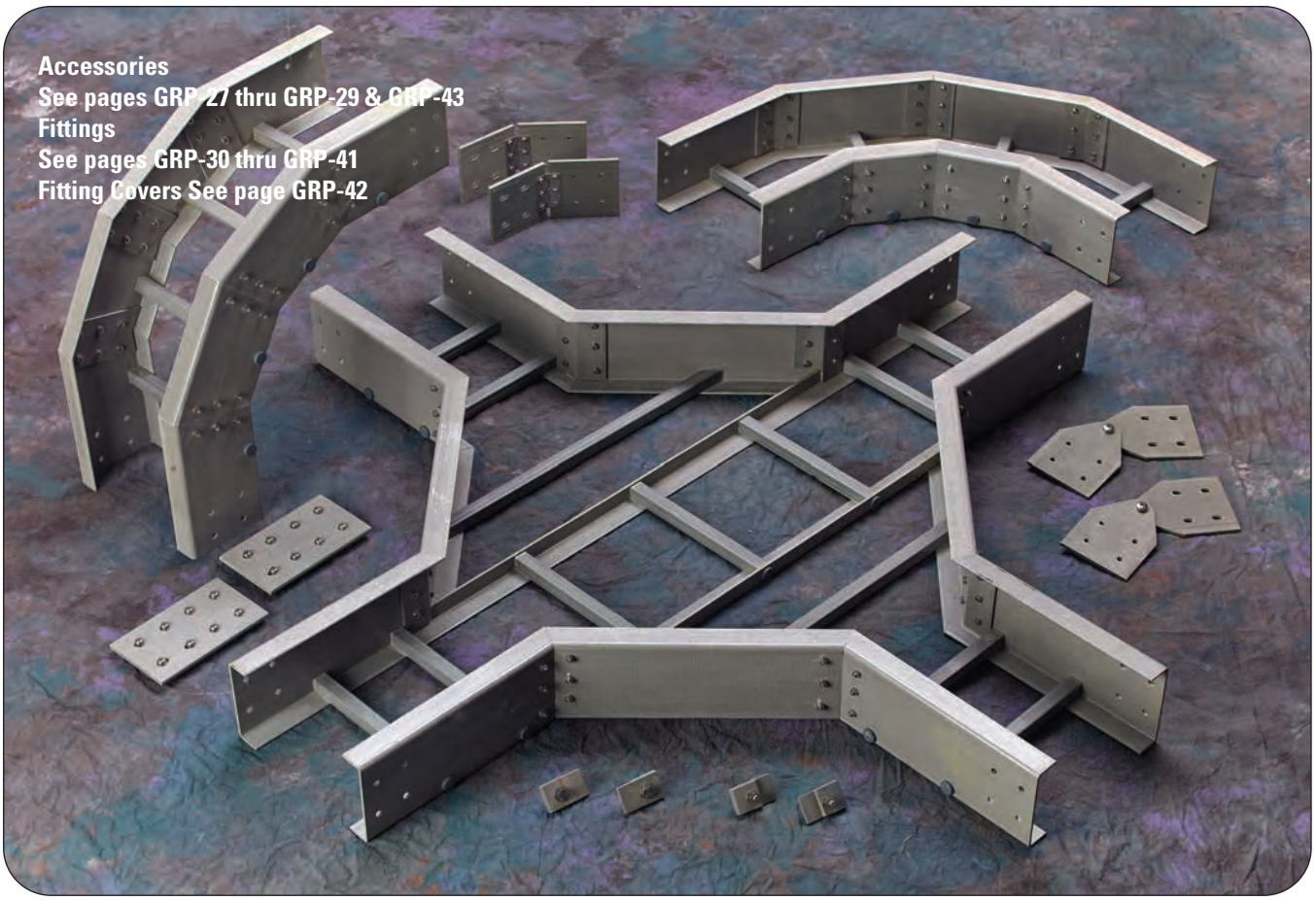
Accessories
See pages GRP-27 thru GRP-29 & GRP-43
Fittings
See pages GRP-30 thru GRP-41
Fitting Covers See page GRP-42

Glass Reinforced Polyester (GRP) Cable Ladder

Side Rails

- Maximized material efficiency for lower weight
- Optimized material distribution increases ladder stiffness
- Pultruded fiberglass shapes maximize corrosion resistance

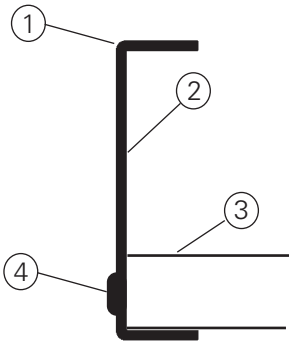

1. **Pultruded siderails and rungs designed to NEMA FG-1 Standards**
2. **Made from high quality structural grade resins**
3. **Positive Rung Support**
4. **Rungs mechanically fastened and resin sealed for a watertight connection**

Splices – providing system integrity

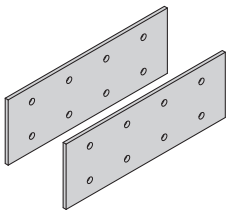

Splices – the engineered connection:

- Resin matches tray to maintain performance
- 316 stainless steel hardware ideal for corrosion resistance
- Eight-bolt connection minimizes deflection at the splice location

Resin Types

Polyester Resin

- Lightest and most cost effective resin
- Tested to ASTM E662, UL 94, ASTM E84, and ASTM D635 for Fire Resistance Performance
- UV Resistant Per ISO 4582

Zero Halogen Resin

- Meets all performance characteristics of polyester resin above
- IEC 754 Certified for Low Smoke, Zero Halogen

Options available

- Carbon Veil - Meets dis-Stat requirements for ABS Certification Tested to CENELEC BS EN 50014, ASTM D257
- Slotted Rungs: Class Y Free base area per IEC 61537 available

Fiberglass Cable Ladder - Straight Sections

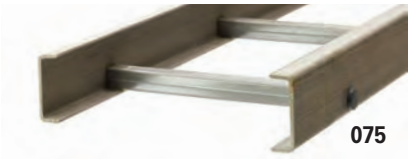

One pair of splice plates with SS6
(316 Stainless Steel) hardware included

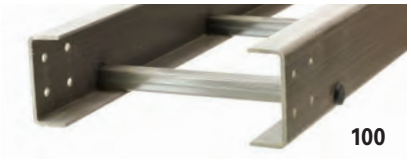

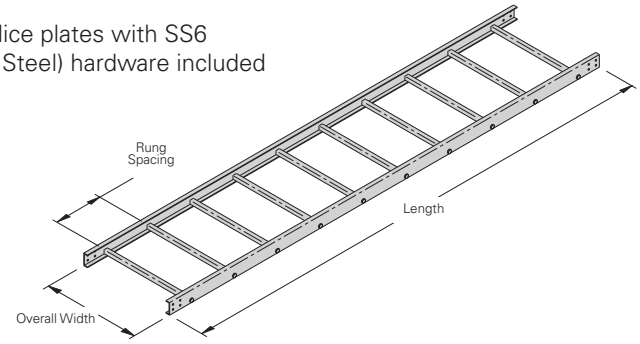

Fiberglass Cable Ladder Straight Section Part Numbering

Example: **100 F 225 N D 02C LL - 0300 - 3000**

Prefix: **100 F 225 N D** — Suffix: **02C LL - 0300 - 3000**

Ladder Height
- **075** = 75mm
- **100** = 100mm

Material Type
- **F** = Polyester Resin
- **FZ** = Zero Halogen Resin
- **FD** = Polyester Resin w/ Carbon Surface Veil
- **FH** = Zero Halogen Resin w/ Carbon Surface Veil

Rung Spacing
- **150** = 150mm
- **225** = 225mm
- **250** = 250mm
- **300** = 300mm

Rung Shape
- **N** = Non-Slotted
- **S** = Slotted

Rung Orientation
- **D** = Down

Series
- **02C** = 75mm & 100mm tray heights

Type
- **LL** = Ladder Straight Section

Width
- **0150** = 150mm
- **0200** = 200mm
- **0300** = 300mm
- **0450** = 450mm
- **0600** = 600mm
- **0750** = 750mm
- **0900** = 900mm

Length
- **3000** = 3000mm
- **6000** = 6000mm†

† Only available for 100mm height

B-Line Series	Side Rail Dimensions	NEMA & CSA Classifications	Span ft	Load lbs/ft	Deflection Multiplier	Span meters	Load kg/m	Deflection Multiplier
075 02C	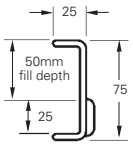	NEMA: 10C	6	292.5	0.003	1.8	435.3	0.059
			8	164.5	0.011	2.4	244.8	0.187
			9.8	108.7	0.027	3.0	161.7	0.457

B-Line Series	Side Rail Dimensions	NEMA & CSA Classifications	Span ft	Load lbs/ft	Deflection Multiplier	Span meters	Load kg/m	Deflection Multiplier
100 02C	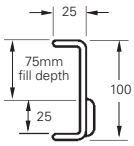	NEMA: 16A, 12C	8	270.8	0.004	2.4	403.0	0.067
			10	173.3	0.010	3.0	257.9	0.162
			12	120.4	0.020	3.7	179.1	0.337
			14	88.4	0.037	4.3	131.6	0.624
			16	67.7	0.062	4.9	100.7	1.064

Values are based on simple beam tests per NEMA VFG-1 on 24" wide cable ladder rungs spaced on 12" centers. Published load safety factor is 1.5. To convert 1.5 safety factor to 2.0, multiply published load by 0.75. To obtain mid-span deflection, multiply a load by the deflection multiplier. Cable ladder must be supported on spans shorter than or equal to the length of the cable being installed.

When ladders are used in continuous spans, the deflection of the ladder is reduced by as much as 50%.

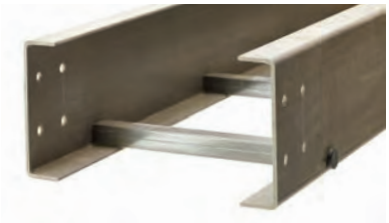

One pair of splice plates with SS6 (316 Stainless Steel) hardware included

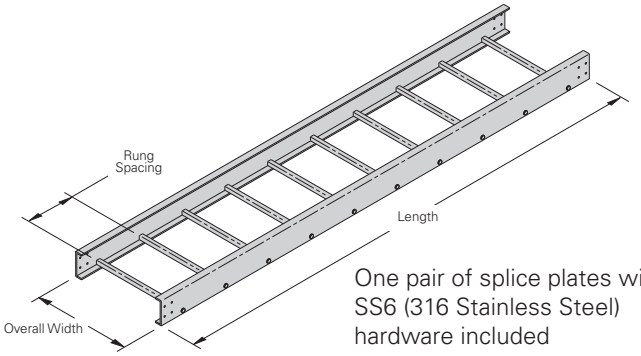

One pair of splice plates with SS6 (316 Stainless Steel) hardware included

Fiberglass Cable Ladder Straight Section Part Numbering

Prefix — Suffix

Example: **150 F 225 N D 03C LL - 0300 - 3000**

Ladder Height	Material Type	Rung Spacing	Rung Shape	Rung Orientation	Series	Type	Width	Length
150 = 150mm	**F** = Polyester Resin **FZ** = Zero Halogen Resin **FD** = Polyester Resin w/ Carbon Surface Veil **FH** = Zero Halogen Resin w/ Carbon Surface Veil	**150** = 150mm **225** = 225mm **250** = 250mm **300** = 300mm	**N** = Non-Slotted **S** = Slotted	**D** = Down	**03C**	**LL** = Ladder Straight Section	**0150** = 150mm **0200** = 200mm **0300** = 300mm **0450** = 450mm **0600** = 600mm **0750** = 750mm **0900** = 900mm	**3000** = 3000mm **6000** = 6000mm

B-Line Series	Side Rail Dimensions	NEMA & CSA Classifications	Span ft	Load lbs/ft	Deflection Multiplier	Span meters	Load kg/m	Deflection Multiplier
150 03C	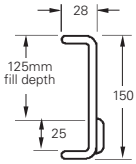	NEMA: 16B, 12C	10	241.9	0.003	3.0	360.0	0.057
			12	168.0	0.007	3.7	250.0	0.118
			14	123.4	0.013	4.3	183.7	0.218
			16	94.5	0.022	4.9	140.6	0.372

Values are based on simple beam tests per NEMA VFG-1 on 36" wide cable ladder rungs spaced on 12" centers. Published load safety factor is 1.5. To convert 1.5 safety factor to 2.0, multiply published load by 0.75. To obtain mid-span deflection, multiply a load by the deflection multiplier. Cable ladder must be supported on spans shorter than or equal to the length of the cable being installed.

When ladders are used in continuous spans, the deflection of the ladder is reduced by as much as 50%.

Fiberglass Cable Ladder - Straight Sections

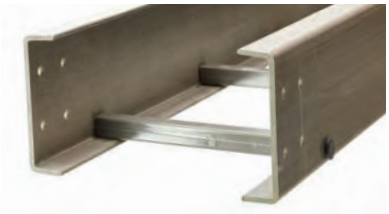

One pair of splice plates with SS6 (316 Stainless Steel) hardware included

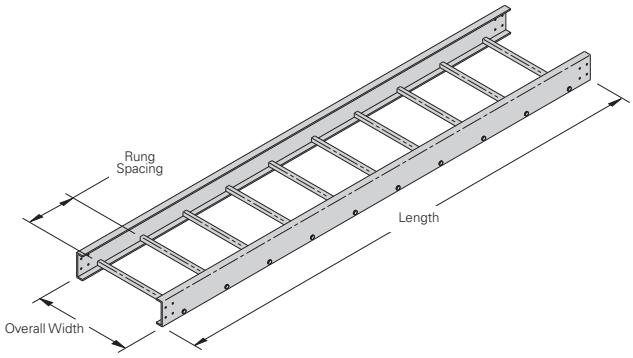

Fiberglass Cable Ladder Straight Section Part Numbering

Prefix — Suffix

Example: **150 F 225 N D 04C LL - 0300 - 3000**

Ladder Height	Material Type	Rung Spacing	Rung Shape	Rung Orientation	Series	Type	Width	Length
150 = 150mm	**F** = Polyester Resin **FZ** = Zero Halogen Resin **FD** = Polyester Resin w/ Carbon Surface Veil **FH** = Zero Halogen Resin w/ Carbon Surface Veil	**150** = 150mm **225** = 225mm **250** = 250mm **300** = 300mm	**N** = Non-Slotted **S** = Slotted	**D** = Down	**04C**	**LL** = Ladder Straight Section	**0150** = 130mm **0200** = 200mm **0300** = 300mm **0450** = 450mm **0600** = 600mm **0750** = 750mm **0900** = 900mm	**3000** = 3000mm **6000** = 6000mm

B-Line Series	Side Rail Dimensions	NEMA & CSA Classifications	Span ft	Load lbs/ft	Deflection Multiplier	Span meters	Load kg/m	Deflection Multiplier
150 04C	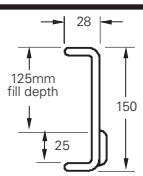	NEMA: 20C	12	297.6	0.005	3.7	442.9	0.086
			14	218.7	0.009	4.3	325.4	0.159
			16	167.4	0.016	4.9	249.1	0.271
			18	132.3	0.025	5.5	196.8	0.433
			19.7	110.6	0.039	6.0	164.6	0.661

Values are based on simple beam tests per NEMA VFG-1 on 36" wide cable ladder rungs spaced on 12" centers. Published load safety factor is 1.5. To convert 1.5 safety factor to 2.0, multiply published load by 0.75. To obtain mid-span deflection, multiply a load by the deflection multiplier. Cable ladder must be supported on spans shorter than or equal to the length of the cable being installed.

When ladders are used in continuous spans, the deflection of the ladder is reduced by as much as 50%.

One pair of splice plates with SS6
(316 Stainless Steel) hardware included

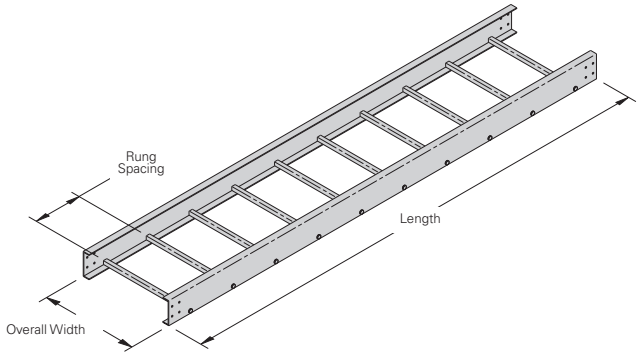

Fiberglass Cable Ladder Straight Section Part Numbering

Prefix — Suffix

Example: **150 F 225 N D 05C LL - 0300 - 3000**

Ladder Height	Material Type	Rung Spacing	Rung Shape	Rung Orientation	Series	Type	Width	Length
150 = 150mm	**F** = Polyester Resin **FZ** = Zero Halogen Resin **FD** = Polyester Resin w/ Carbon Surface Veil **FH** = Zero Halogen Resin w/ Carbon Surface Veil	**150** = 150mm **225** = 225mm **250** = 250mm **300** = 300mm	**N** = Non-Slotted **S** = Slotted	**D** = Down	**05C**	**LL** = Ladder Straight Section	**0150** = 150mm **0200** = 200mm **0300** = 300mm **0450** = 450mm **0600** = 600mm **0750** = 750mm **0900** = 900mm	**3000** = 3000mm **6000** = 6000mm

B-Line Series	Side Rail Dimensions	NEMA & CSA Classifications	Span ft	Load lbs/ft	Deflection Multiplier	Span meters	Load kg/m	Deflection Multiplier
150 05C	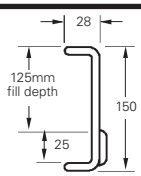	NEMA: 20C	14	326.4	0.007	4.3	485.7	0.115
			16	249.9	0.011	4.9	371.9	0.196
			18	197.5	0.018	5.5	293.8	0.314
			19.7	165.1	0.028	6.0	245.7	0.479

Values are based on simple beam tests per NEMA VFG-1 on 36" wide cable ladder rungs spaced on 12" centers. Published load safety factor is 1.5. To convert 1.5 safety factor to 2.0, multiply published load by 0.75. To obtain mid-span deflection, multiply a load by the deflection multiplier. Cable ladder must be supported on spans shorter than or equal to the length of the cable being installed.

When ladders are used in continuous spans, the deflection of the ladder is reduced by as much as 50%.

Fiberglass Cable Ladder - Accessories

Part Number Explanation
Note: All hardware is M8

Hardware	316 Stainless Steel
	SS6

Example: LSP100F: pair of standard splice plates for 4" (101) system Polyester Resin
LSP100FZ: pair of standard splice plates for 4" (101) system Zero Halogen Resin

Standard Splice Plates

Included in needed quantities with ladder section.
- Furnished in pairs
- Order only pairs of splice plates needed for field fabrication
- Supplied with SS6 hardware

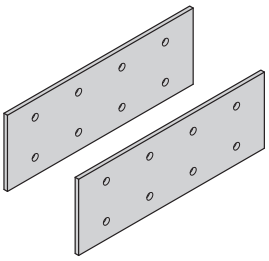

Material	Height	Catalog No.
Fiberglass	3" (76)	**LSP075(Δ)**
	4" (101)	**LSP100(Δ)**
	6" (152)	**LSP150(Δ)**

Expansion Splice Plate

L-shaped, lay-in style
- Furnished in pairs
- Supplied with SS6 hardware

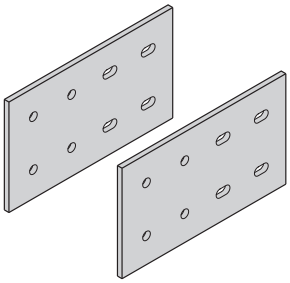

Material	Height	Catalog No.
Fiberglass	3" (76)	**LES075(Δ)**
	4" (101)	**LES100(Δ)**
	6" (152)	**LES150(Δ)**

Vertical Adjustable Splice Plates

These plates provide for changes in elevation that do not conform to standard vertical fittings.
- Furnished in pairs
- Supplied with SS6 hardware

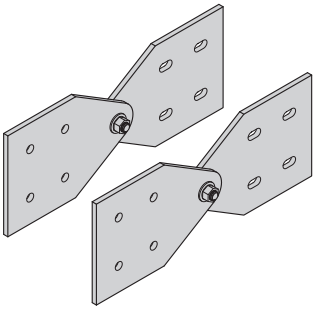

Material	Height	Catalog No.
Fiberglass	3" (76)	**LVA075(Δ)**
	4" (101)	**LVA100(Δ)**
	6" (152)	**LVA150(Δ)**

Horizontal Adjustable Splice Plates

These plates provide for changes in the horizontal direction that do not conform to standard fittings.
- Furnished in pairs
- Stainless steel hinges, FRP body
- Supplied with SS6 hardware

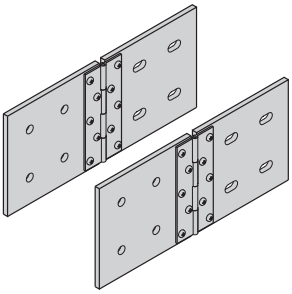

Material	Height	Catalog No.
Fiberglass	3" (76)	**LHA075(Δ)**
	4" (101)	**LHA100(Δ)**
	6" (152)	**LHA150(Δ)**

(Δ) Material Insert: **F** = Polyester Resin, **FZ** = Zero Halogen Resin, **FD** = F w/ Carbon Surface Veil, **FH** = FZ w/ Carbon Surface Veil

Dimensions are in millimeters unless otherwise specified.

Blind End Plate

This plate forms a closure for any ladder that dead ends.

- Furnished as one plate
- W = insert ladder width

* Hardware suffix needed to complete part number

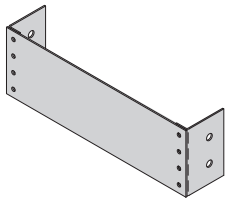

Material	Height	Catalog No.
Fiberglass	3" (76)	**LBE075(Δ)(W)**
	4" (101)	**LBE100(Δ)(W)**
	6" (152)	**LBE150(Δ)(W)**

Ladder Drop-Out

Specially designed Ladder Drop-Outs provide a rounded surface with adequate radius to protect cable as it exits from the ladder, helping prevent damage to insulation.

- 100mm radius
- Drop-out width = 150mm

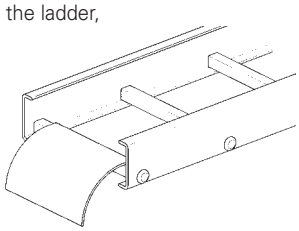

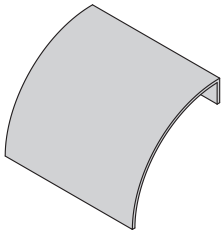

Catalog No.
LDO(Δ)

Horizontal Clamp/Guide - Fiberglass

- Non-metallic
- M10 hardware included
- Combination hold down clamp and guide for horizontal applications
- (Δ) Insert material (see bottom of page)
- Sold in pairs

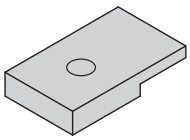

Material	Tray Size	Catalog No.
Fiberglass	075 02C	**LHC075(Δ)02C**
	100 02C	**LHC100(Δ)02C**
	150 03C	**LHC150(Δ)03C**
	150 04C	**LHC150(Δ)04C**
	150 04C	**LHC150(Δ)05C**

Vertical Clamp/Guide - Fiberglass

- Non-metallic
- M10 hardware included
- Combination hold down clamp and guide for vertical applications
- (Δ) Insert material (see bottom of page)
- Sold in pairs

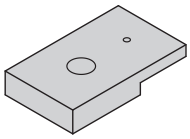

Material	Tray Size	Catalog No.
Fiberglass	075 02C	**LVC075(Δ)02C**
	100 02C	**LVC100(Δ)02C**
	150 03C	**LVC150(Δ)03C**
	150 04C	**LVC150(Δ)04C**
	150 04C	**LVC150(Δ)05C**

Hold Down Clamp

- Non-metallic
- M10 hardware included
- Material - Stainless Steel 316
- Sold in pairs

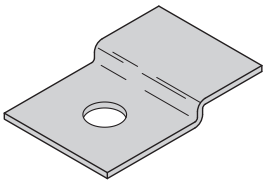

Material	Tray Size	Catalog No.
SS6	075 02C	**LZC07502C**
	100 02C	**LZC10002C**
	150 03C	**LZC15003C**
	150 04C	**LZC15004C**
	150 04C	**LZC15005C**

(Δ) Material Insert: **F** = Polyester Resin, **FZ** = Zero Halogen Resin, **FD** = F w/ Carbon Surface Veil, **FH** = FZ w/ Carbon Surface Veil

Dimensions are in millimeters unless otherwise specified.

Fiberglass Conduit to Cable Ladder Adapter

- For rigid or PVC conduit
- Standard hardware is 316 stainless steel
- Add 'N' to end of part number if non-metallic hardware is preferred

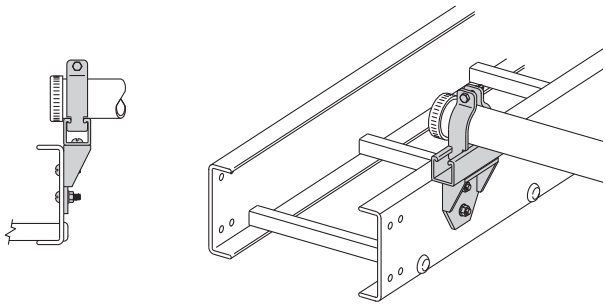

Catalog No.	Conduit Size in.	mm
9F-2008	0.50	15
9F-2009	0.75	20
9F-2010	1.00	25
9F-2011	1.25	32
9F-2012	1.50	40
9F-2013	2.00	50
9F-2014	2.50	65
9F-2015	3.00	80
9F-2016	3.50	90
9F-2017	4.00	100

Barriers

- Furnished with #10 x ½" self-drilling stainless steel screws

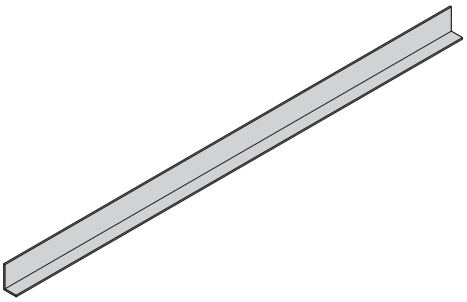

Catalog No.	Side Rail Height mm
LSD075(Δ)-3000	75
LSD100(Δ)-3000	100
LSD150(Δ)-3000	150

Resin Seal Kit

To reseal fiberglass after field modifications.

- 1 pint (473ml)

Contents: Sealant and Applicator.

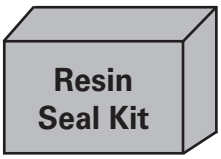

Catalog No.
RSK-101

(Δ) Material Insert: **F** = Polyester Resin, **FZ** = Zero Halogen Resin, **FD** = F w/ Carbon Surface Veil, **FH** = FZ w/ Carbon Surface Veil

Dimensions are in millimeters unless otherwise specified.

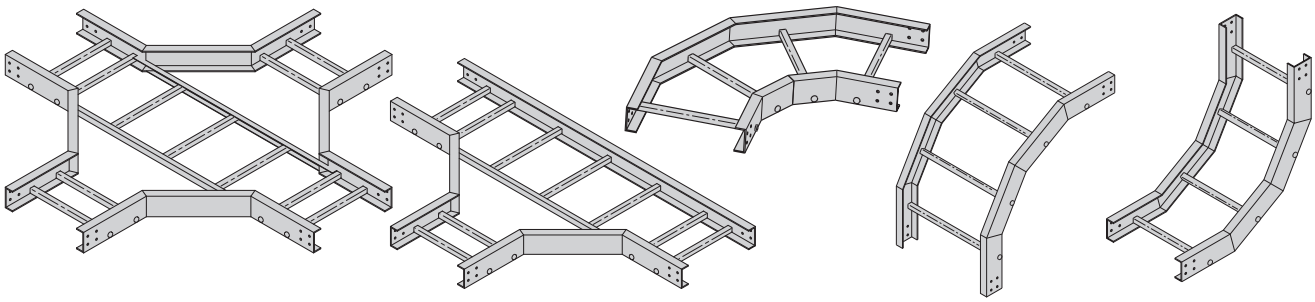

Fiberglass Cable Ladder Fittings Part Numbering

Prefix | Suffix

Example: **100 F 225 N D 03C HB - 0300 - 90 R0300**

Tray Height	Material Type	Rung Spacing	Rung Shape	Rung Orientation	Series	Type	Width	Angle	Radius
075 = 075mm **100** = 100mm **150** = 150mm	**F** = Polyester Resin **FZ** = Zero Halogen Resin **FD** = Polyester Resin w/ Carbon Surface Veil **FH** = Zero Halogen Resin w/ Carbon Surface Veil	**300** = 300mm	**N** = Non-Slotted **S** = Slotted	**D** = Down	**02C** = 75mm & 100mm **03C** = 150mm **04C** = 150mm **05C** = 150mm	**HB** = Horz. Bend **HT** = Horz. Tee* **HX** = Horz. Cross* **VO** = Vert. Outside **VI** = Vert. Inside	**0150** = 150mm **0200** = 200mm **0300** = 300mm **0450** = 450mm **0600** = 600mm **0750** = 750mm†† **0900** = 900mm††	**30** = 30° **45** = 45° **60** = 60° **90** = 90°	**R0300** = 300mm **R0600** = 600mm **R0900** = 900mm

* No angles requires on these fittings
†† Only available for 100mm & 150mm heights

Fiberglass Cable Ladder Reducer Fittings Part Numbering

Prefix | Suffix

Example: **100 F 225 N D 03C - 0300 - SR 0150**

Tray Height	Material Type	Rung Spacing	Rung Shape	Rung Orientation	Series	Width 1	Type	Width 2
075 = 075mm **100** = 100mm **150** = 150mm	**F** = Polyester Resin **FZ** = Zero Halogen Resin **FD** = Polyester Resin w/ Carbon Surface Veil **FH** = Zero Halogen Resin w/ Carbon Surface Veil	**300** = 300mm	**N** = Non-Slotted **S** = Slotted	**D** = Down	**02C** = 75mm & 100mm **03C** = 150mm **04C** = 150mm **05C** = 150mm	**0200** = 200mm **0300** = 300mm **0450** = 450mm **0600** = 600mm **0750** = 750mm†† **0900** = 900mm††	**RR** = Right Reducer **LR** = Left Reducer **SR** = Straight Reducer	**0150** = 150mm **0200** = 200mm **0300** = 300mm **0450** = 450mm **0600** = 600mm **0750** = 750mm††

* No angles requires on these fittings
†† Only available for 100mm & 150mm heights

Fiberglass

Dimensions are in millimeters unless otherwise specified.

Horizontal Bend
90° (HB)

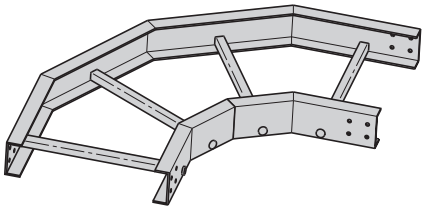

One pair of splice plates with SS6 hardware included.

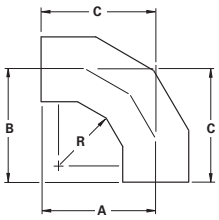

90° Mitered

- R - Bend Radius mm	Ladder Width mm	90° Horizontal Bend - Mitered Catalog No.	Dimensions A mm	B mm	C mm
300	150	**(Prefix)HB-0150-90-R0300**	525	525	525
	200	**(Prefix)HB-0200-90-R0300**	550	550	550
	300	**(Prefix)HB-0300-90-R0300**	600	600	600
	450	**(Prefix)HB-0450-90-R0300**	675	675	675
	600	**(Prefix)HB-0600-90-R0300**	750	750	750
	750††	**(Prefix)HB-0750-90-R0300**	825	825	825
	900††	**(Prefix)HB-0900-90-R0300**	900	900	900
600	150	**(Prefix)HB-0150-90-R0600**	825	825	825
	200	**(Prefix)HB-0200-90-R0600**	850	850	850
	300	**(Prefix)HB-0300-90-R0600**	900	900	900
	450	**(Prefix)HB-0450-90-R0600**	975	975	975
	600	**(Prefix)HB-0600-90-R0600**	1050	1050	1050
	750††	**(Prefix)HB-0750-90-R0600**	1125	1125	1125
	900††	**(Prefix)HB-0900-90-R0600**	1200	1200	1200
900	150	**(Prefix)HB-0150-90-R0900**	1125	1125	1125
	200	**(Prefix)HB-0200-90-R0900**	1150	1150	1150
	300	**(Prefix)HB-0300-90-R0900**	1200	1200	1200
	450	**(Prefix)HB-0450-90-R0900**	1275	1275	1275
	600	**(Prefix)HB-0600-90-R0900**	1350	1350	1350
	750††	**(Prefix)HB-0750-90-R0900**	1425	1425	1425
	900††	**(Prefix)HB-0900-90-R0900**	1500	1500	1500

†† Only available for 100mm & 150mm heights

Prefix - HB 0150 - 90 - R0300
- Radius
- Angle
- Width
- Fitting
- To complete catalog number, insert fitting prefix.

(Prefix) See page GRP-30 for catalog number prefix.
Dimensions for reference only, when critical contact factory.

Horizontal Bend 60° (HB)

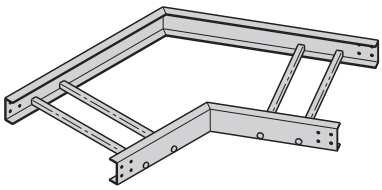

One pair of splice plates with SS6 hardware included.

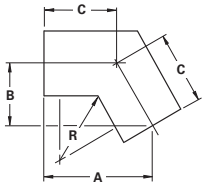

60° Mitered

- R - Bend Radius mm	Ladder Width mm	60° Horizontal Bend - Mitered Catalog No.	Dimensions A mm	B mm	C mm
300	150	**(Prefix)HB-0150-60-R0300**	550	317	367
	200	**(Prefix)HB-0200-60-R0300**	571	330	381
	300	**(Prefix)HB-0300-60-R0300**	615	355	410
	450	**(Prefix)HB-0450-60-R0300**	680	392	453
	600	**(Prefix)HB-0600-60-R0300**	745	430	496
	750††	**(Prefix)HB-0750-60-R0300**	810	467	540
	900††	**(Prefix)HB-0900-60-R0300**	875	505	583
600	150	**(Prefix)HB-0150-60-R0600**	810	467	540
	200	**(Prefix)HB-0200-60-R0600**	831	480	554
	300	**(Prefix)HB-0300-60-R0600**	875	505	583
	450	**(Prefix)HB-0450-60-R0600**	939	542	626
	600	**(Prefix)HB-0600-60-R0600**	1004	580	670
	750††	**(Prefix)HB-0750-60-R0600**	1069	617	713
	900††	**(Prefix)HB-0900-60-R0600**	1134	655	756
900	150	**(Prefix)HB-0150-60-R0900**	1069	617	713
	200	**(Prefix)HB-0200-60-R0900**	1091	630	727
	300	**(Prefix)HB-0300-60-R0900**	1134	655	756
	450	**(Prefix)HB-0450-60-R0900**	1199	692	800
	600	**(Prefix)HB-0600-60-R0900**	1264	730	843
	750††	**(Prefix)HB-0750-60-R0900**	1329	767	886
	900††	**(Prefix)HB-0900-60-R0900**	1394	805	929

†† Only available for 100mm & 150mm heights

Prefix - HB 0150 - 60 - R0300
- Radius
- Angle
- Width
- Fitting
- To complete catalog number, insert fitting prefix.

(Prefix) See page GRP-30 for catalog number prefix.
Dimensions for reference only, when critical contact factory.

Fiberglass

Dimensions are in millimeters unless otherwise specified.

Horizontal Bend
45° (HB)

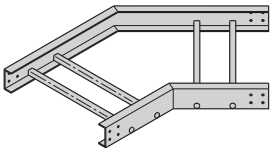

One pair of splice plates with SS6 hardware included.

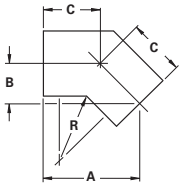

45° Mitered

- R - Bend Radius mm	Ladder Width mm	45° Horizontal Bend - Mitered Catalog No.	Dimensions A mm	B mm	C mm
300	150	**(Prefix)HB-0150-45-R0300**	521	216	305
	200	**(Prefix)HB-0200-45-R0300**	539	223	316
	300	**(Prefix)HB-0300-45-R0300**	574	238	337
	450	**(Prefix)HB-0450-45-R0300**	627	260	367
	600	**(Prefix)HB-0600-45-R0300**	680	282	399
	750††	**(Prefix)HB-0750-45-R0300**	733	304	430
	900††	**(Prefix)HB-0900-45-R0300**	786	326	461
600	150	**(Prefix)HB-0150-45-R0600**	733	304	430
	200	**(Prefix)HB-0200-45-R0600**	751	311	440
	300	**(Prefix)HB-0300-45-R0600**	786	326	461
	450	**(Prefix)HB-0450-45-R0600**	839	348	492
	600	**(Prefix)HB-0600-45-R0600**	892	370	523
	750††	**(Prefix)HB-0750-45-R0600**	945	392	554
	900††	**(Prefix)HB-0900-45-R0600**	999	414	585
900	150	**(Prefix)HB-0150-45-R0900**	945	392	554
	200	**(Prefix)HB-0200-45-R0900**	963	399	564
	300	**(Prefix)HB-0300-45-R0900**	999	414	585
	450	**(Prefix)HB-0450-45-R0900**	1052	436	616
	600	**(Prefix)HB-0600-45-R0900**	1105	458	647
	750††	**(Prefix)HB-0750-45-R0900**	1158	480	678
	900††	**(Prefix)HB-0900-45-R0900**	1211	501	709

†† Only available for 100mm & 150mm heights

Prefix - HB 0150 - 45 - R0300
- Radius
- Angle
- Width
- Fitting
- To complete catalog number, insert fitting prefix.

(Prefix) See page GRP-30 for catalog number prefix.
Dimensions for reference only, when critical contact factory.

Horizontal Bend 30° (HB)

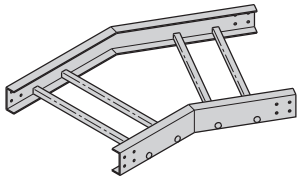

One pair of splice plates with SS6 hardware included.

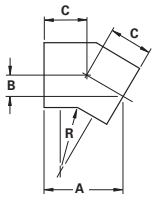

30˚ Mitered

- R - Bend Radius mm	Ladder Width mm	30˚ Horizontal Bend - Mitered Catalog No.	Dimensions A mm	B mm	C mm
300	150	**(Prefix)HB-0150-30-R0300**	467	125	250
	200	**(Prefix)HB-0200-30-R0300**	480	129	257
	300	**(Prefix)HB-0300-30-R0300**	505	135	271
	450	**(Prefix)HB-0450-30-R0300**	542	145	291
	600	**(Prefix)HB-0600-30-R0300**	580	155	311
	750††	**(Prefix)HB-0750-30-R0300**	617	165	331
	900††	**(Prefix)HB-0900-30-R0300**	655	175	351
600	150	**(Prefix)HB-0150-30-R0600**	617	165	331
	200	**(Prefix)HB-0200-30-R0600**	630	169	338
	300	**(Prefix)HB-0300-30-R0600**	655	175	351
	450	**(Prefix)HB-0450-30-R0600**	692	186	371
	600	**(Prefix)HB-0600-30-R0600**	730	196	391
	750††	**(Prefix)HB-0750-30-R0600**	767	206	411
	900††	**(Prefix)HB-0900-30-R0600**	805	216	431
900	150	**(Prefix)HB-0150-30-R0900**	767	206	411
	200	**(Prefix)HB-0200-30-R0900**	780	209	418
	300	**(Prefix)HB-0300-30-R0900**	805	216	431
	450	**(Prefix)HB-0450-30-R0900**	842	226	451
	600	**(Prefix)HB-0600-30-R0900**	880	236	472
	750††	**(Prefix)HB-0750-30-R0900**	917	246	492
	900††	**(Prefix)HB-0900-30-R0900**	955	256	512

†† Only available for 100mm & 150mm heights

Prefix - HB 0150 - 30 - R0300
- Radius
- Angle
- Width
- Fitting
- To complete catalog number, insert fitting prefix.

(Prefix) See page GRP-30 for catalog number prefix.
Dimensions for reference only, when critical contact factory.

Fiberglass

Dimensions are in millimeters unless otherwise specified.

Horizontal Tee (HT)

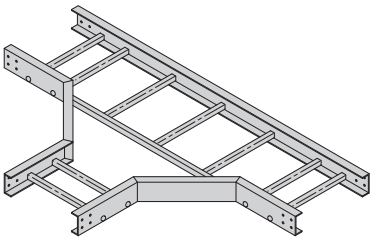

Two pair of splice plates with SS6 hardware included.

- R - Bend Radius mm	Ladder Width mm	Horizontal Tee - Mitered Catalog No.	Dimensions A mm	Dimensions B mm
300	150	**(Prefix)HT-0150-R0300**	735	1470
	200	**(Prefix)HT-0200-R0300**	760	1520
	300	**(Prefix)HT-0300-R0300**	810	1620
	450	**(Prefix)HT-0450-R0300**	885	1770
	600	**(Prefix)HT-0600-R0300**	960	1920
	750††	**(Prefix)HT-0750-R0300**	1035	2070
	900††	**(Prefix)HT-0900-R0300**	1110	2220
600	150	**(Prefix)HT-0150-R0600**	1035	2070
	200	**(Prefix)HT-0200-R0600**	1060	2120
	300	**(Prefix)HT-0300-R0600**	1110	2220
	450	**(Prefix)HT-0450-R0600**	1185	2370
	600	**(Prefix)HT-0600-R0600**	1260	2520
	750††	**(Prefix)HT-0750-R0600**	1335	2670
	900††	**(Prefix)HT-0900-R0600**	1410	2820
900	150	**(Prefix)HT-0150-R0900**	1335	2670
	200	**(Prefix)HT-0200-R0900**	1360	2720
	300	**(Prefix)HT-0300-R0900**	1410	2820
	450	**(Prefix)HT-0450-R0900**	1485	2970
	600	**(Prefix)HT-0600-R0900**	1560	3120
	750††	**(Prefix)HT-0750-R0900**	1635	3270
	900††	**(Prefix)HT-0900-R0900**	1710	3420

†† Only available for 100mm & 150mm heights

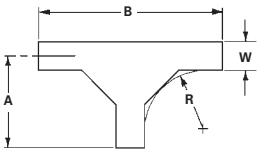

Mitered Tee

Prefix HT - 0150 - R0300
- Radius
- Width
- Fitting
- To complete catalog number, insert fitting prefix.

(Prefix) See page GRP-30 for catalog number prefix.
Dimensions for reference only, when critical contact factory.

Fiberglass

Dimensions are in millimeters unless otherwise specified.

Horizontal Cross (HX)

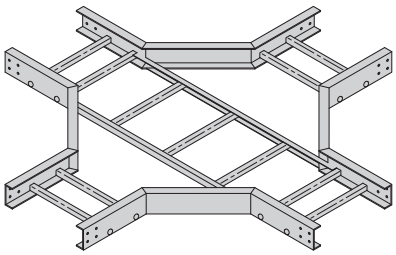

Three pair of splice plates with SS6 hardware included.

- R - Bend Radius mm	Ladder Width mm	Horizontal Cross - Mitered Catalog No.	Dimensions A mm	Dimensions B mm
300	150	**(Prefix)HX-0150-R0300**	735	1470
	200	**(Prefix)HX-0200-R0300**	760	1520
	300	**(Prefix)HX-0300-R0300**	810	1620
	450	**(Prefix)HX-0450-R0300**	885	1770
	600	**(Prefix)HX-0600-R0300**	960	1920
	750††	**(Prefix)HX-0750-R0300**	1035	2070
	900††	**(Prefix)HX-0900-R0300**	1110	2220
600	150	**(Prefix)HX-0150-R0600**	1035	2070
	200	**(Prefix)HX-0200-R0600**	1060	2120
	300	**(Prefix)HX-0300-R0600**	1110	2220
	450	**(Prefix)HX-0450-R0600**	1185	2370
	600	**(Prefix)HX-0600-R0600**	1260	2520
	750††	**(Prefix)HX-0750-R0600**	1335	2670
	900††	**(Prefix)HX-0900-R0600**	1410	2820
900	150	**(Prefix)HX-0150-R0900**	1335	2670
	200	**(Prefix)HX-0200-R0900**	1360	2720
	300	**(Prefix)HX-0300-R0900**	1410	2820
	450	**(Prefix)HX-0450-R0900**	1485	2970
	600	**(Prefix)HX-0600-R0900**	1560	3120
	750††	**(Prefix)HX-0750-R0900**	1635	3270
	900††	**(Prefix)HX-0900-R0900**	1710	3420

†† Only available for 100mm & 150mm heights

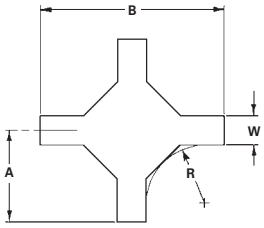

Mitered Cross

Prefix HX - 0150 - R0300
- Radius
- Width
- Fitting
- To complete catalog number, insert fitting prefix.

(Prefix) See page GRP-30 for catalog number prefix.
Dimensions for reference only, when critical contact factory.

Fiberglass

Dimensions are in millimeters unless otherwise specified.

Reducers (LR) (SR) (RR)

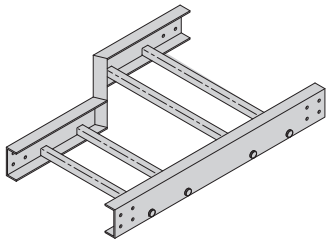

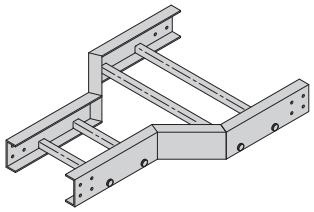

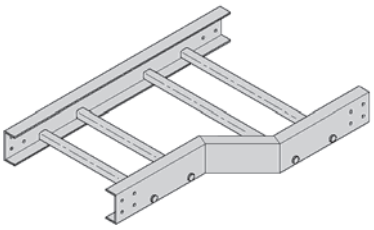

One pair of splice plates with SS6 hardware included.

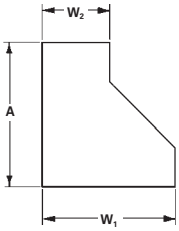

Left Reducer

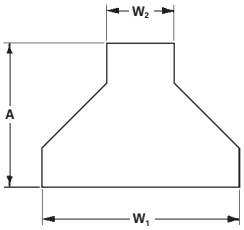

Straight Reducer

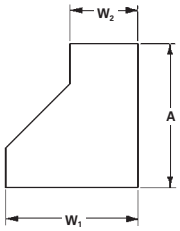

Right Reducer

075 Fittings
(Only available in W1 widths of 200mm, 300mm, 450mm & 600mm)

100 & 150 Fittings
(Available in all W1 widths shown in chart)

Reducers are all of mitered construction.

Prefix - 0300 - SR 0200
- 0200: Width2 W2
- SR: Fitting
- 0300: Width1 W1
- Prefix: To complete catalog number, insert fitting prefix.

(Prefix) See page GRP-30 for catalog number prefix.
Dimensions for reference only, when critical contact factory.

Ladder Width		Left Hand Reducer		Straight Reducer		Right Hand Reducer	
W_1 mm	W_2 mm	Catalog No.	A mm	Catalog No.	A mm	Catalog No.	A mm
200	150	**(Prefix)-0200-LR0150**	770	**(Prefix)-0200-SR0150**	745	**(Prefix)-0200-RR0150**	770
300	150	**(Prefix)-0300-LR0150**	870	**(Prefix)-0300-SR0150**	795	**(Prefix)-0300-RR0150**	870
	200	**(Prefix)-0300-LR0200**	820	**(Prefix)-0300-SR0200**	770	**(Prefix)-0300-RR0200**	820
450	150	**(Prefix)-0450-LR0150**	1020	**(Prefix)-0450-SR0150**	870	**(Prefix)-0450-RR0150**	1020
	200	**(Prefix)-0450-LR0200**	970	**(Prefix)-0450-SR0200**	845	**(Prefix)-0450-RR0200**	970
	300	**(Prefix)-0450-LR0300**	870	**(Prefix)-0450-SR0300**	795	**(Prefix)-0450-RR0300**	870
600	150	**(Prefix)-0600-LR0150**	1170	**(Prefix)-0600-SR0150**	945	**(Prefix)-0600-RR0150**	1170
	200	**(Prefix)-0600-LR0200**	1120	**(Prefix)-0600-SR0200**	920	**(Prefix)-0600-RR0200**	1120
	300	**(Prefix)-0600-LR0300**	1020	**(Prefix)-0600-SR0300**	870	**(Prefix)-0600-RR0300**	1020
	450	**(Prefix)-0600-LR0450**	870	**(Prefix)-0600-SR0450**	795	**(Prefix)-0600-RR0450**	870
750††	150	**(Prefix)-0750-LR0150**	1320	**(Prefix)-0750-SR0150**	1020	**(Prefix)-0750-RR0150**	1320
	200	**(Prefix)-0750-LR0200**	1270	**(Prefix)-0750-SR0200**	995	**(Prefix)-0750-RR0200**	1270
	300	**(Prefix)-0750-LR0300**	1170	**(Prefix)-0750-SR0300**	945	**(Prefix)-0750-RR0300**	1170
	450	**(Prefix)-0750-LR0450**	1020	**(Prefix)-0750-SR0450**	870	**(Prefix)-0750-RR0450**	1020
	600	**(Prefix)-0750-LR0600**	870	**(Prefix)-0750-SR0600**	795	**(Prefix)-0750-RR0600**	870
900††	150	**(Prefix)-0900-LR0150**	1470	**(Prefix)-0900-SR0150**	1095	**(Prefix)-0900-RR0150**	1470
	200	**(Prefix)-0900-LR0200**	1420	**(Prefix)-0900-SR0200**	1070	**(Prefix)-0900-RR0200**	1420
	300	**(Prefix)-0900-LR0300**	1320	**(Prefix)-0900-SR0300**	1020	**(Prefix)-0900-RR0300**	1320
	450	**(Prefix)-0900-LR0450**	1170	**(Prefix)-0900-SR0450**	945	**(Prefix)-0900-RR0450**	1170
	600	**(Prefix)-0900-LR0600**	1020	**(Prefix)-0900-SR0600**	870	**(Prefix)-0900-RR0600**	1020
	750	**(Prefix)-0900-LR0750**	870	**(Prefix)-0900-SR0750**	795	**(Prefix)-0900-RR0750**	870

†† Only available for 100mm & 150mm heights

Vertical Bends 90° (VO) (VI)

Vertical Outside Bend

VO

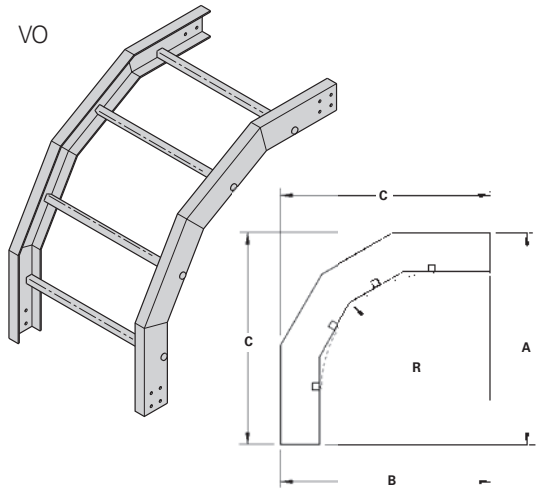

90˚ (VO) Mitered

Vertical Inside Bend

VI

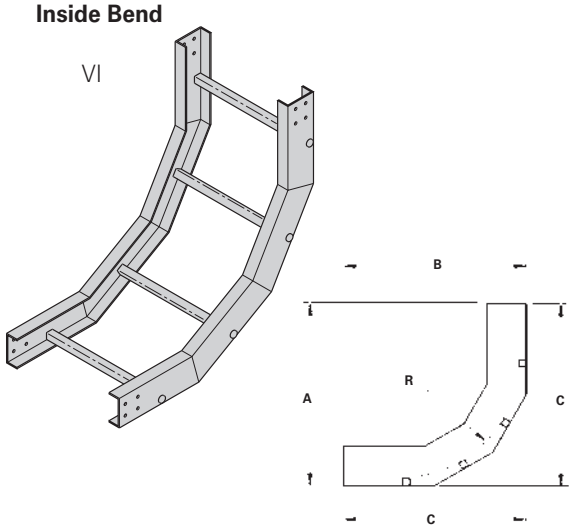

90˚ (VI) Mitered

Prefix VO - 0150 - 90 R0300
- Radius
- Angle
- Width
- Fitting
- To complete catalog number, insert fitting prefix.

One pair of splice plates with SS6 hardware included.

(Prefix) See page GRP-30 for catalog number prefix.
Dimensions for reference only, when critical contact factory.

Prefix VI - 0150 - 90 R0300
- Radius
- Angle
- Width
- Fitting
- To complete catalog number, insert fitting prefix.

- R - Bend Radius mm	Ladder Width mm	(*) Insert 'VO' for Vertical Outside Bend or 'VI' for Vertical Inside Bend. Catalog No.	90˚ Mitered					
			Vertical Outside Bend			Vertical Inside Bend		
			A mm	B mm	C mm	A mm	B mm	C mm
300	150	**(Prefix)(*)-0150-90R0300**	450	450	450	475	475	475
	200	**(Prefix)(*)-0200-90R0300**						
	300	**(Prefix)(*)-0300-90R0300**						
	450	**(Prefix)(*)-0450-90R0300**						
	600	**(Prefix)(*)-0600-90R0300**						
	750††	**(Prefix)(*)-0750-90R0300**						
	900††	**(Prefix)(*)-0900-90R0300**						
600	150	**(Prefix)(*)-0150-90R0600**	750	750	750	775	775	775
	200	**(Prefix)(*)-0200-90R0600**						
	300	**(Prefix)(*)-0300-90R0600**						
	450	**(Prefix)(*)-0450-90R0600**						
	600	**(Prefix)(*)-0600-90R0600**						
	750††	**(Prefix)(*)-0750-90R0600**						
	900††	**(Prefix)(*)-0900-90R0600**						
900	150	**(Prefix)(*)-0150-90R0900**	1050	1050	1050	1075	1075	1075
	200	**(Prefix)(*)-0200-90R0900**						
	300	**(Prefix)(*)-0300-90R0900**						
	450	**(Prefix)(*)-0450-90R0900**						
	600	**(Prefix)(*)-0600-90R0900**						
	750††	**(Prefix)(*)-0750-90R0900**						
	900††	**(Prefix)(*)-0900-90R0900**						

†† Only available for 100mm & 150mm heights

Fiberglass

Dimensions are in millimeters unless otherwise specified.

Vertical Bends
60° (VO) (VI)

Vertical Outside Bend

VO

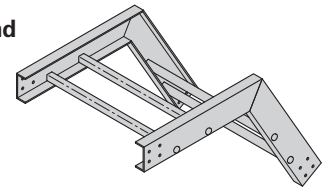

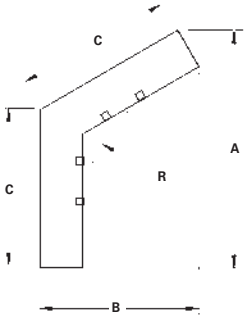

60˚ (VO) Mitered

Vertical Inside Bend

VI

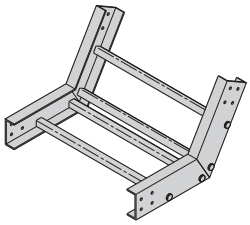

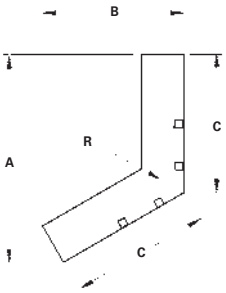

60˚ (VI) Mitered

Prefix VO - 0150 - 60 R0300
- Radius
- Angle
- Width
- Fitting
- To complete catalog number, insert fitting prefix.

One pair of splice plates with SS6 hardware included.

(Prefix) See page GRP-30 for catalog number prefix.
Dimensions for reference only, when critical contact factory.

Prefix VI - 0150 - 60 R0300
- Radius
- Angle
- Width
- Fitting
- To complete catalog number, insert fitting prefix.

- R - Bend Radius mm	Ladder Width mm	(*) Insert 'VO' for Vertical Outside Bend or 'VI' for Vertical Inside Bend. Catalog No.	60˚ Mitered					
			Vertical Outside Bend			Vertical Inside Bend		
			A mm	B mm	C mm	A mm	B mm	C mm
300	150	**(Prefix)(*)-0150-60R0300**	485	280	323	506	292	338
	200	**(Prefix)(*)-0200-60R0300**						
	300	**(Prefix)(*)-0300-60R0300**						
	450	**(Prefix)(*)-0450-60R0300**						
	600	**(Prefix)(*)-0600-60R0300**						
	750††	**(Prefix)(*)-0750-60R0300**						
	900††	**(Prefix)(*)-0900-60R0300**						
600	150	**(Prefix)(*)-0150-60R0600**	745	430	496	766	442	511
	200	**(Prefix)(*)-0200-60R0600**						
	300	**(Prefix)(*)-0300-60R0600**						
	450	**(Prefix)(*)-0450-60R0600**						
	600	**(Prefix)(*)-0600-60R0600**						
	750††	**(Prefix)(*)-0750-60R0600**						
	900††	**(Prefix)(*)-0900-60R0600**						
900	150	**(Prefix)(*)-0150-60R0900**	1004	580	670	1026	592	684
	200	**(Prefix)(*)-0200-60R0900**						
	300	**(Prefix)(*)-0300-60R0900**						
	450	**(Prefix)(*)-0450-60R0900**						
	600	**(Prefix)(*)-0600-60R0900**						
	750††	**(Prefix)(*)-0750-60R0900**						
	900††	**(Prefix)(*)-0900-60R0900**						

†† Only available for 100mm & 150mm heights

Fiberglass

Vertical Bends 45° (VO) (VI)

Vertical Outside Bend

VO

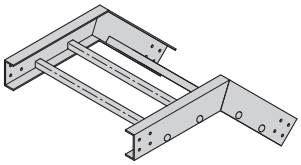

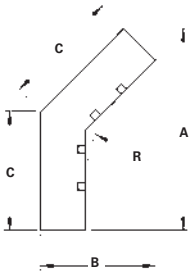

45˚ (VO) Mitered

Vertical Inside Bend

VI

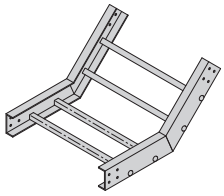

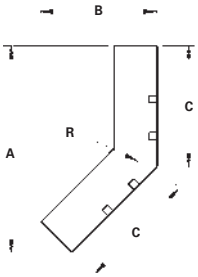

45˚ (VI) Mitered

Prefix VO - 0150 - 45 R0300
- Radius
- Angle
- Width
- Fitting
- To complete catalog number, insert fitting prefix.

One pair of splice plates with SS6 hardware included.

(Prefix) See page GRP-30 for catalog number prefix.
Dimensions for reference only, when critical contact factory.

Prefix VI - 0150 - 45 R0300
- Radius
- Angle
- Width
- Fitting
- To complete catalog number, insert fitting prefix.

- R - Bend Radius mm	Ladder Width mm	(*) Insert 'VO' for Vertical Outside Bend or 'VI' for Vertical Inside Bend. Catalog No.	45˚ Mitered					
			Vertical Outside Bend			Vertical Inside Bend		
			A mm	B mm	C mm	A mm	B mm	C mm
300	150	**(Prefix)(*)-0150-45R0300**	468	194	275	486	201	285
	200	**(Prefix)(*)-0200-45R0300**						
	300	**(Prefix)(*)-0300-45R0300**						
	450	**(Prefix)(*)-0450-45R0300**						
	600	**(Prefix)(*)-0600-45R0300**						
	750††	**(Prefix)(*)-0750-45R0300**						
	900††	**(Prefix)(*)-0900-45R0300**						
600	150	**(Prefix)(*)-0150-45R0600**	680	282	399	698	289	409
	200	**(Prefix)(*)-0200-45R0600**						
	300	**(Prefix)(*)-0300-45R0600**						
	450	**(Prefix)(*)-0450-45R0600**						
	600	**(Prefix)(*)-0600-45R0600**						
	750††	**(Prefix)(*)-0750-45R0600**						
	900††	**(Prefix)(*)-0900-45R0600**						
900	150	**(Prefix)(*)-0150-45R0900**	892	370	523	910	377	533
	200	**(Prefix)(*)-0200-45R0900**						
	300	**(Prefix)(*)-0300-45R0900**						
	450	**(Prefix)(*)-0450-45R0900**						
	600	**(Prefix)(*)-0600-45R0900**						
	750††	**(Prefix)(*)-0750-45R0900**						
	900††	**(Prefix)(*)-0900-45R0900**						

†† Only available for 100mm & 150mm heights

Fiberglass

Dimensions are in millimeters unless otherwise specified.

Vertical Bends
30° (VO) (VI)

Vertical Outside Bend

VO

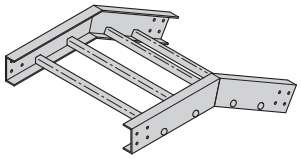

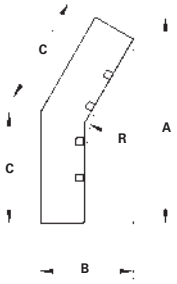

30˚ (VO) Mitered

Vertical Inside Bend

VI

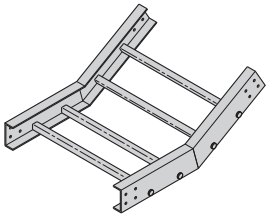

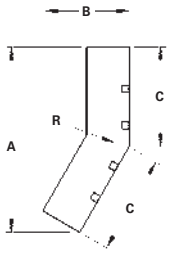

30˚ (VI) Mitered

Prefix VO - 0150 - 30 R0300
- Radius
- Angle
- Width
- Fitting
- To complete catalog number, insert fitting prefix.

One pair of splice plates with SS6 hardware included.

(Prefix) See page GRP-30 for catalog number prefix.
Dimensions for reference only, when critical contact factory.

Prefix VI - 0150 - 30 R0300
- Radius
- Angle
- Width
- Fitting
- To complete catalog number, insert fitting prefix.

- R - Bend Radius mm	Ladder Width mm	(*) Insert 'VO' for Vertical Outside Bend or 'VI' for Vertical Inside Bend. Catalog No.	30˚ Mitered					
			Vertical Outside Bend			Vertical Inside Bend		
			A mm	B mm	C mm	A mm	B mm	C mm
300	150	**(Prefix)(*)-0150-30R0300**	430	115	230	442	119	237
	200	**(Prefix)(*)-0200-30R0300**						
	300	**(Prefix)(*)-0300-30R0300**						
	450	**(Prefix)(*)-0450-30R0300**						
	600	**(Prefix)(*)-0600-30R0300**						
	750††	**(Prefix)(*)-0750-30R0300**						
	900††	**(Prefix)(*)-0900-30R0300**						
600	150	**(Prefix)(*)-0150-30R0600**	580	155	311	592	159	318
	200	**(Prefix)(*)-0200-30R0600**						
	300	**(Prefix)(*)-0300-30R0600**						
	450	**(Prefix)(*)-0450-30R0600**						
	600	**(Prefix)(*)-0600-30R0600**						
	750††	**(Prefix)(*)-0750-30R0600**						
	900††	**(Prefix)(*)-0900-30R0600**						
900	150	**(Prefix)(*)-0150-30R0900**	730	196	392	742	199	398
	200	**(Prefix)(*)-0200-30R0900**						
	300	**(Prefix)(*)-0300-30R0900**						
	450	**(Prefix)(*)-0450-30R0900**						
	600	**(Prefix)(*)-0600-30R0900**						
	750††	**(Prefix)(*)-0750-30R0900**						
	900††	**(Prefix)(*)-0900-30R0900**						

†† Only available for 100mm & 150mm heights

Covers

Material Thickness: ⅛" (3mm)

Cover Length: 10' (3m)

Standard Mounting Hardware:
(10 each) #10 x ½" stainless, self drilling screws provided with each section

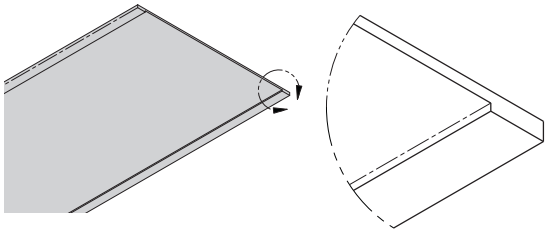

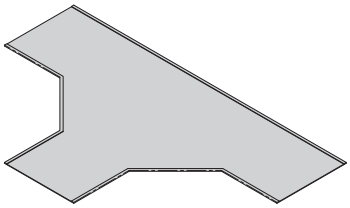

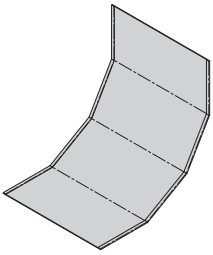

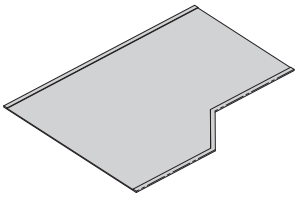

Fiberglass Cable Ladder Straight Section Covers Part Numbering

Prefix / Suffix

Example: **CIF S F SS - 150 - 3000**

Tray Type	Top Style	Material	Type	Width	Length
CIF = Straight Section Cable Ladder Cover Fiberglass	**S** = Solid	**F** = Polyester Resin **FZ** = Zero Halogen Resin **FD** = Polyester Resin w/ Carbon Surface Veil **FH** = Zero Halogen Resin w/ Carbon Surface Veil	**SS** = Straight Section	**150** = 150mm **200** = 200mm **300** = 300mm **450** = 450mm **600** = 600mm **750** = 750mm **900** = 900mm	**3000** = 3000mm

Fiberglass Cable Ladder Fitting Covers Part Numbering

Prefix / Suffix

Example: **CCF S F VO - 0150 - 90 R0600 - 075** **(side rail height)**

Tray Type	Top Style	Material
CCF = Ladder Fitting Cover Fiberglass	**S** = Solid	**F** = Polyester Resin **FZ** = Zero Halogen Resin **FD** = Polyester Resin w/ Carbon Surface Veil **FH** = Zero Halogen Resin w/ Carbon Surface Veil

HB **Insert HB Suffix from pages GRP-31 – GRP-34**
HT **Insert HT Suffix from page GRP-35**
HX **Insert HX Suffix from page GRP-36**
LR **Insert LR Suffix from page GRP-37**
SR **Insert SR Suffix from page GRP-37**
RR **Insert RR Suffix from page GRP-37**
VI **Insert VI Suffix from pages GRP-38 – GRP-41**
VO **Insert VO Suffix from pages GRP-38 – GRP-41 & Side Rail Height**

Fiberglass

Dimensions are in millimeters unless otherwise specified.

Quantity of Standard Cover Clamps Required

Straight Section 3000mm.....4 pcs.
Straight Section 6000mm.....8 pcs.
Horizontal/Vertical Bends .....4 pcs.
Tees .....6 pcs.
Crosses.....8 pcs.

Note: When using the Wrap Around Cover Clamp, only one-half the number of clamps stated above is required.

Standard Cover Clamp

- Used to clamp cover on side rail.
- Furnished in pairs with hardware.

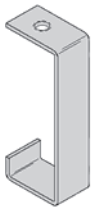

Catalog No.	Side Rail Height	
	in.	mm
LCF075	3	76
LCF100	4	101
LCF150	6	152

Standard Raised Cover Clamp

- Used to clamp and hold a cover on and above the side rail.
- Furnished in pairs with hardware.

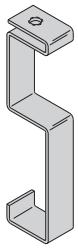

Catalog No.	Side Rail Height	
	in.	mm
LCR075	3	76
LCR100	4	101
LCR150	6	152

Wrap Around Cover Clamp

Recommended for outdoor service.
- W = ladder width
- Heavy duty cover clamp available for flat covers only

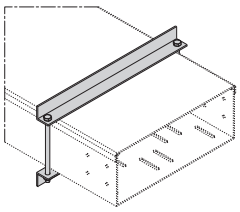

Catalog No.	Side Rail Height	
	in.	mm
PWCC075(Δ)-(W)	3	76
PWCC100(Δ)-(W)	4	101
PWCC150(Δ)-(W)	6	152

Thermo Plastic Drive Rivet

Shipped in packages of 25 pcs.

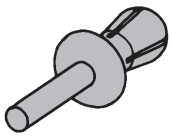

Catalog No.
TPDR

Material Designations

(Δ) Insert one of the following material designations from chart on page GRP-42 when required.

Dimensions are in millimeters unless otherwise specified.

Load Data

Fiberglass Cable Ladder and Cable Tray are offered in four versions for applications as follows:

Standard Series	Resin Type	Meets
P050F, P100F, 075F02C, 100F02C, 150F03C, 150F04C, 150F05C	Fire Retardant Polyester Gray color	ASTM E84 Class 1 UL94 VO Good Corrosion Resistance in most environments
Zero Halogen		
P050FZ, P100FZ, 075FZ02C, 100FZ02C, 150FZ03C, 150FZ04C, 150FZ05C	Fire Retardant Zero Halogen Gray color	ASTM E84 Class 1 UL94 VO Smoke Generation and Toxicity for Mass Transit Requirements and Off Shore application
Dis-Stat		
P050FD, P100FD, 075FD02C, 100FD02C, 150FD03C, 150FD04C, 150FD05C	Fire Retardant Dis-Stat Polyester Gray color	ASTM E84 Class 1 UL94 VO ASTM D257-99 Dissipates Static Charge
Dis-Stat / Zero Halogen		
P050FH, P100FH, 075FH02C, 100FH02C, 150FH03C, 150FH04C, 150FH05C	Fire Retardant Zero Halogen / Dis-Stat Gray color	ASTM E84 Class 1 UL94 VO ASTM D257-99 Dissipates Static Charge Smoke Generation and Toxicity for Mass Transit Requirements and Off Shore application

Effect of Temperature

Strength properties of reinforced plastics are reduced when continuously exposed to elevated temperatures. Working loads shall be reduced based on the following:

Temperature in Degrees F	Approximate Percent of Strength
75	100
100	90
125	78
150	68
175	60
200	52

NEMA Standard 8-10-1986
If unusual temperature conditions exist, the manufacturer should be consulted.
Authorized Engineering information 8-20-1986

Typical Properties of Pultruded Components

B-Line Fiberglass Cable Ladder systems are manufactured from glass fiber-reinforced plastic shapes that meet ASTM E-84, Smoke Density rating for polyester of 680, for vinyl ester 1025, Class 1 Flame Rating and self-extinguishing requirements of ASTM D-635. A surface veil is applied during pultrusion to insure a resin-rich surface and ultraviolet resistance.

Flame Resistance (FTMS 406-2023) ign/burn, seconds	75/75
Intermittent Flame Test (HLT-15), rating	100
Flammability Test (ASTM D635) Ignition Burning Time	 none 0 sec.

Properties	Test Method	Unit/ Value	3" & 4" Cable Ladder, Cable Channel		6" Cable Ladder	
			Longitudinal	Transverse	Longitudinal	Transverse
Density	ASTM D1505	lbs/in³	.058-.062	-	.072 - .076	-
Coefficient of Thermal Expansion	ASTM D696	in/in/°F	5.0×10^{-6}	-	5.0×10^{-6}	-
Water Absorption	ASTM D570	Max %	0.5	-	0.5	-
Dielectic Strength	ASTM D149	V/mil (vpm)	200	-	200	-
Flammability Classification	UL94	VO	-	-	-	-
Flame Spread	ASTM E-84	20 Max	-	-	-	-

Fiberglass

Dimensions are in millimeters unless otherwise specified.

Corrosion Guide

The information shown in this corrosion guide is based on full immersion laboratory tests and data generated from resin manufacturer's data. It should be noted that in some of the environments listed, splashes and spill situations may result in a more corrosive situation than indicated due to the evaporation of water. Regular wash down is recommended in these situations.
All data represents the best available information and is believed to be correct. The data should not be construed as a warranty of performance for that product as presented in these tables. User tests should be performed to determine suitability of service if there is any doubt or concern. Such variables as concentration, temperature, time and combined chemical effects of mixtures of chemicals make it impossible to specify the exact suitability of fiber reinforced plastics in all environments. B-Line will be happy to supply material samples for testing. These recommendations should only be used as a guide and B-Line does not take responsibility for design or suitability of materials for service intended. In no event will B-Line be liable for any consequential or special damages for any defective material or workmanship including without limitation, labor charge, other expense or damage to properties resulting from loss of materials or profits or increased expenses of operations.

Chenical Environment	Polyester		Vinyl Ester	
	Max Wt. %	Max Oper. Temp °F	Max Wt. %	Max Oper. Temp °F
Acetic Acid	10	190	10	210
Acetic Acid	50	125	50	180
Acetone	N/R	N/R	100	75
Aluminum Chloride	SAT	170	SAT	200
Aluminum Hydroxide	SAT	160	SAT	170
Aluminum Nitrate	SAT	150	SAT	170
Aluminum Sulfate	SAT	180	SAT	200
Ammonium Chloride	SAT	170	SAT	190
Ammonium Hydroxide	1	100	10	150
Ammonium Hydroxide	28	N/R	28	100
Ammonium Carbonate	N/R	N/R	SAT	150
Ammonium Bicarbonate	15	125	SAT	130
Ammonium Nitrate	SAT	160	SAT	190
Ammonium Persulfate	SAT	N/R	SAT	150
Ammonium Sulfate	SAT	170	SAT	200
Amyl Alcohol	ALL	N/R	ALL	90
Amyl Alcohol Vapor	-	140	-	120
Benzene	N/R	N/R	100	140
Benzene Sulfonic Acid	25	110	SAT	200
Benzoic Acid	SAT	150	SAT	200
Benzoyl Alcohol	100	N/R	100	N/R
Borax	SAT	170	SAT	200
Calcium Carbonate	SAT	170	SAT	200
Calcium Chloride	SAT	170	SAT	200
Calcium Hydroxide	25	70	25	165
Calcium Nitrate	SAT	180	SAT	200
Calcium Sulfate	SAT	180	SAT	200
Carbon Disulfide	N/R	N/R	N/R	N/R
Carbonic Acid	SAT	130	SAT	180
Carbon Dioxide Gas	-	200	-	200
Carbon Monoxide Gas	-	200	-	200
Carbon Tetrachloride	N/R	N/R	100	75
Chlorine, Dry Gas	-	140	-	170
Chlorine, Wet Gas	-	N/R	-	180
Chlorine Water	SAT	80	SAT	180

Chenical Environment	Polyester		Vinyl Ester	
	Max Wt. %	Max Oper. Temp °F	Max Wt. %	Max Oper. Temp °F
Chromic Acid	5	70	10	120
Citric Acid	SAT	170	SAT	200
Copper Chloride	SAT	170	SAT	200
Copper Cyanide	SAT	170	SAT	200
Copper Nitrate	SAT	170	SAT	200
Crude Oil, Sour	100	170	100	200
Cyclohexane	N/R	N/R	N/R	N/R
Cyclohexane, Vapor	ALL	100	ALL	130
Diesel Fuel	100	160	100	180
Diethyl Ether	N/R	N/R	N/R	N/R
Dimethyl Phthalate	N/R	N/R	N/R	N/R
Ethanol	50	75	50	90
Ethyl Acetate	N/R	N/R	N/R	N/R
Ethylene Chloride	N/R	N/R	N/R	N/R
Ethylene Glycol	100	90	100	200
Fatty Acids	SAT	180	SAT	200
Ferric Chloride	SAT	170	SAT	200
Ferric Nitrate	SAT	170	SAT	200
Ferric Sulfate	SAT	170	SAT	200
Ferrous Chloride	SAT	170	SAT	200
Fluoboric Acid	N/R	N/R	SAT	165
Fluosilicic Acid	N/R	N/R	SAT	70
Formaldehyde	50	75	50	100
Formic Acid	N/R	N/R	50	100
Gasoline	100	80	100	150
Glucose	100	170	100	200
Glycerine	100	150	100	200
Heptane	100	110	100	120
Hexane	100	90	100	130
Hydrobromic Acid	50	120	50	120
Hydrochloric Acid	10	150	10	200
Hydrochloric Acid	20	140	20	190
Hydrochloric Acid	37	75	37	95
Hydrofluoric Acid	N/R	N/R	15	80
Hydrogen Bromide, Dry	100	190	100	200

-: No Information Available N/R: Not Recommended SAT: Saturated Solution FUM: Fumes

Corrosion Guide

Chenical Environment	Polyester		Vinyl Ester	
	Max Wt. %	Max Oper. Temp °F	Max Wt. %	Max Oper. Temp °F
Hydrogen Bromide, Wet	100	75	100	130
Hydrogen Chloride	-	120	-	200
Hydrogen Peroxide	5	100	30	100
Hydrogen Sulfide, Dry	100	170	100	210
Hydrogen Sulfide, Wet	100	170	100	210
Hypochlorous Acid	20	80	20	150
Isopropyl Alcohol	N/R	N/R	15	80
Kerosene	100	140	100	180
Lactic Acid	SAT	170	SAT	200
Lead Acetate	SAT	170	SAT	200
Lead Chloride	SAT	140	SAT	200
Lead Nitrate	SAT	-	SAT	200
Linseed Oil	100	150	100	190
Lithium Chloride	SAT	150	SAT	190
Magnesium Carbonate	SAT	140	SAT	170
Magnesium Chloride	SAT	170	SAT	200
Magnesium Hydroxide	SAT	150	SAT	190
Magnesium Nitrate	SAT	140	SAT	180
Magnesium Sulfate	SAT	170	SAT	190
Mercuric Chloride	SAT	150	SAT	190
Mercurous Chloride	SAT	140	SAT	180
Methyl Ethyl Ketone	N/R	N/R	N/R	N/R
Mineral Oils	100	170	100	200
Monochlorobenzene	N/R	N/R	N/R	N/R
Naphtha	100	140	100	170
Nickel Chloride	SAT	170	SAT	200
Nickel Nitrate	SAT	170	SAT	200
Nickel Sulfate	SAT	170	SAT	200
Nitric Acid	5	140	5	150
Nitric Acid	20	70	20	100
Oleic Acid	100	170	100	190
Oxalic Acid	ALL	75	ALL	120
Paper Mill Liquors	-	100	-	120
Perchlorethylene	100	N/R	100	N/R
Perchloric Acid	N/R	N/R	10	150
Perchloric Acid	N/R	N/R	30	80
Phosphoric Acid	10	160	10	200
Phosphoric Acid	100	120	100	200
Potassium Aluminum Sulfate	SAT	170	SAT	200
Potassium Bicarbonate	50	80	50	140
Potassium Carbonate	10	N/R	10	120
Potassium Chloride	SAT	170	SAT	200
Potassium Dichromate	SAT	170	SAT	200

Chenical Environment	Polyester		Vinyl Ester	
	Max Wt. %	Max Oper. Temp °F	Max Wt. %	Max Oper. Temp °F
Potassium Hydroxide	N/R	N/R	25	150
Potassium Nitrate	SAT	170	SAT	200
Potassium Permanganate	100	80	100	210
Potassium Sulfate	SAT	170	SAT	200
Propylene Glycol	ALL	170	ALL	200
Phthalic Acid	-	-	SAT	200
Sodium Acetate	SAT	160	SAT	200
Sodium Benzoate	SAT	170	SAT	200
Sodium Bicarbonate	SAT	160	SAT	175
Sodium Bisulfate	ALL	170	ALL	200
Sodium Bromide	ALL	170	ALL	200
Sodium Carbonate	10	80	35	160
Sodium Chloride	SAT	170	SAT	200
Sodium Cyanide	SAT	170	SAT	200
Sodium Hydroxide	N/R	N/R	50	150
Sodium Hydroxide	N/R	N/R	25	80
Sodium Hypochloride	N/R	N/R	10	150
Sodium Monophosphate	SAT	170	SAT	200
Sodium Nitrate	SAT	170	SAT	200
Sodium Sulfate	SAT	170	SAT	200
Sodium Thiosulfate	ALL	100	ALL	120
Stannic Chloride	SAT	160	SAT	190
Styrene	N/R	N/R	N/R	N/R
Sulfated Detergent	0/50	170	0/50	200
Sulfur Dioxide	100	80	100	200
Sulfur Trioxide	100	80	100	200
Sulfuric Acid	93	N/R	93	N/R
Sulfuric Acid	50	N/R	50	180
Sulfuric Acid	25	75	25	190
Sulfurous Acid	SAT	80	N/R	N/R
Tartaric Acid	SAT	170	SAT	200
Tetrachloroethylene	N/R	N/R	FUM	75
Toluene	N/R	N/R	N/R	N/R
Trisodium Phosphate	N/R	N/R	SAT	175
Urea	SAT	130	SAT	140
Vinegar	100	170	100	200
Water, Distilled	100	170	100	190
Water, Tap	100	170	100	190
Water, Sea	SAT	170	SAT	190
Xylene	N/R	N/R	N/R	N/R
Zinc Chloride	SAT	170	SAT	200
Zinc Nitrate	SAT	170	SAT	200
Zinc Sulfate	SAT	170	SAT	200

-: No Information Available N/R: Not Recommended SAT: Saturated Solution FUM: Fumes

Cable Ladder Installation Guide

Installation of B-Line fiberglass cable ladder should be made in accordance with the standards set by NEMA Publication VE-2, Cable Ladder Installation Guide, and National Electrical Code, Article 318.

- Always observe common safety practices when assembling ladder and fittings. Installations generally require some field cutting. Dust created during fabrication presents no serious health hazard, but skin irritation may be experienced by some workers.
- Operators of saws and drills should wear masks, long sleeve shirts or coveralls.
- Fabrication with fiberglass is relatively easy and comparable to working with wood. Ordinary hand tools may be used in most cases.
- Avoid excessive pressure when sawing or drilling. Too much force can rapidly dull tools and also produce excessive heat which softens the bonding resin in the fiberglass resulting in a ragged edge rather than a clean-cut edge.
- Field cutting is simple and can be accomplished with a circular power saw with an abrasive cut-off wheel (masonry type) or hack saw (24 to 32 teeth per inch).
- Drill fiberglass as you would drill hard wood. Standard twist drills are more than adequate.
- Any surface that has been drilled, cut, sanded or otherwise broken, **must be sealed** with a compatible resin. (see page GRP-29)
- Carbide tipped saw blades and drill bits are recommended when cutting large quantities.
- Support the fiberglass material firmly during cutting operations to keep material from shifting which may cause chipping at the cut edge.
- Each ladder section length should be equal to or greater than the support span.
- When possible, the splice should be located at quarter span.
- Fittings should be supported as per NEMA FG-1.

Cable Ladder Support Locations For Fittings

per NEMA VE-2 Installation Guide

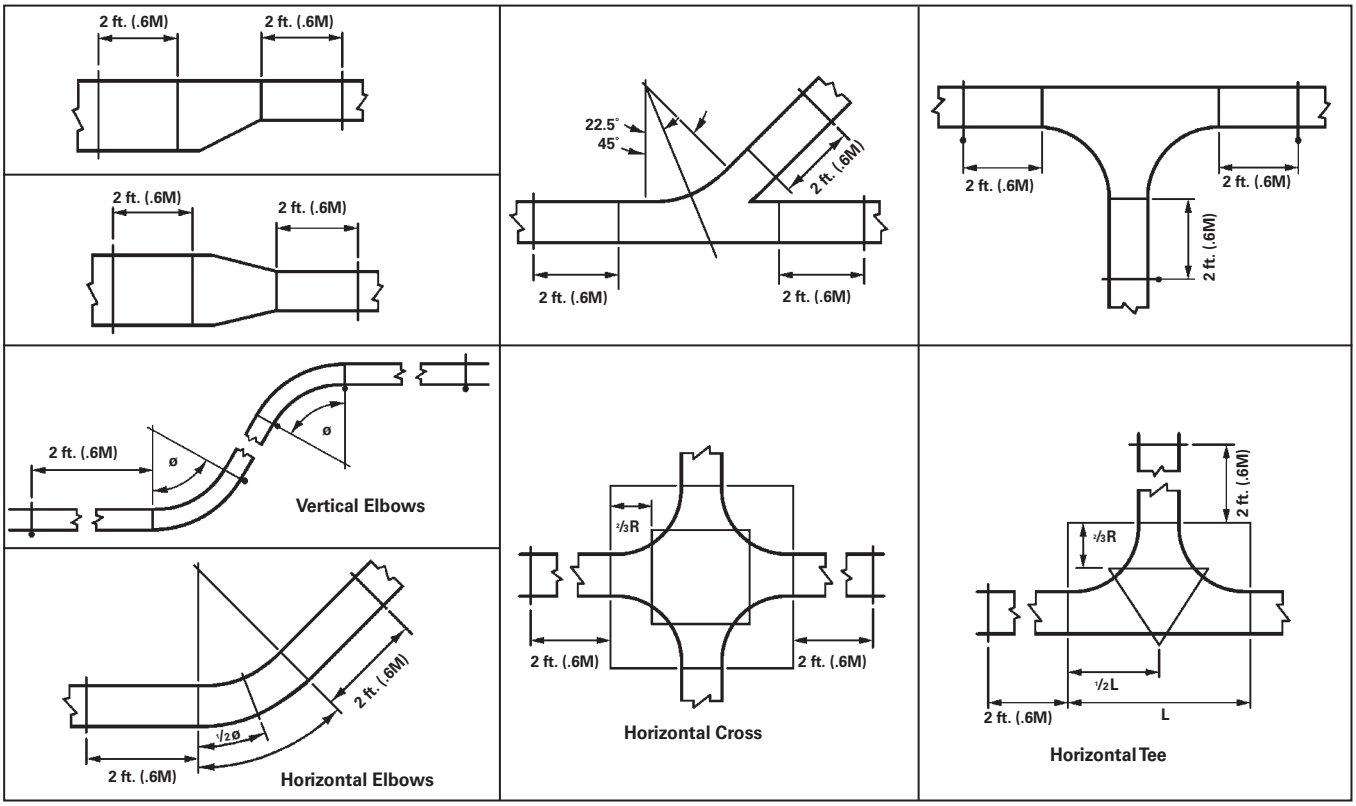

Ø = 30˚, 45˚, 60˚, 90˚

Trefoil Cable Cleat with LSF Pad

1. Recommended for installations where the highest levels of short circuit withstand are required.
2. Short circuit current tested in accordance with BS EN 50368:2003 standard.
3. Available for single and trefoil cable applications.
4. LSF-pad incorporate an integral low smoke, low fume, zero halogen pad.
5. Hardware to attach cleat to rung attachment bracket is included with cleat. Bracket must be ordered separately.

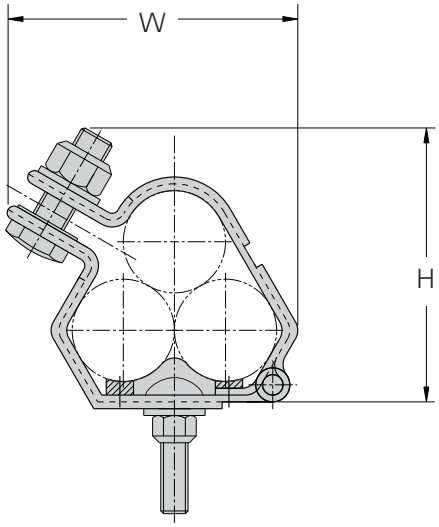

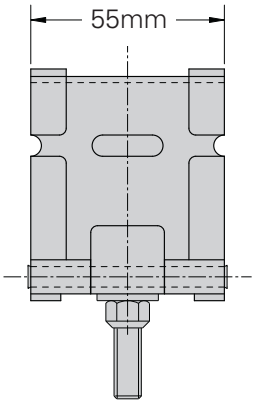

BS EN 50368:2003 (Cable Cleats for Electric Installations) Classification	
Cleat Type	Composite
Resistance to Electromechanical Force	130 kA peak / 50 kA RMS 600 mm spacing
Lateral Load Test	3.439 kg average
Axial Load Test	Pass
Operating Temperature Range	-40°C to +60°C
Impact Resistance	Very Heavy
Needle Flame Test	30 seconds

Technical Specifications	
Frame	50mm x 2mm Marine grade, Non-magnetic 316L
Closure Hardware	Captive 316 Stainless Steel M8 or M10 (M12 available) bolt and nylon-lock nut (Optional Hex Flange Lock Nut available)
Integral Pad	Low Smoke, Low Fume, Zero Halogen
Tools Required	Impact Wrench
Mounting Bolt	Provided with Cable Cleat

	Cable Range (mm)		Dimensions (mm)	
Part No.	Min. Dia.	Max. Dia.	H	W
9SS6-CCT1323	13	22	74	66
9SS6-CCT2125	21	25	77	70
9SS6-CCT2329	23	29	81	78
9SS6-CCT2531	25	31	84	81
9SS6-CCT2733	27	33	86	83
9SS6-CCT2935	29	35	90	89
9SS6-CCT3238	32	38	94	95
9SS6-CCT3541	35	41.5	98	100
9SS6-CCT3844	38	44.5	101	104
9SS6-CCT4248	42	48	105	111
9SS6-CCT4551	45	51	109	117
9SS6-CCT4753	47	53	111	120
9SS6-CCT4955	49	55	114	124
9SS6-CCT5157	51	57	116	127
9SS6-CCT5359	53	59	119	133
9SS6-CCT5561	55	61	127	137
9SS6-CCT5763	57	63	126	140
9SS6-CCT5965	59	65	128	144
9SS6-CCT6167	61	67	132	147
9SS6-CCT6369	63	69	136	150

	Cable Range (mm)		Dimensions (mm)	
Part No.	Min. Dia.	Max. Dia.	H	W
9SS6-CCT6571	65	71	140	153
9SS6-CCT6773	67	73	143	156
9SS6-CCT6975	69	75	147	160
9SS6-CCT7177	71	77	151	163
9SS6-CCT7379	73	79	154	166
9SS6-CCT7581	75	81	158	169
9SS6-CCT7783	77	83	161	173
9SS6-CCT7985	79	85	164	176
9SS6-CCT8187	81	87	169	179
9SS6-CCT8389	83	89	173	182
9SS6-CCT8692	86	92	177	187
9SS6-CCT8896	88	96	181	192
9SS6-CCT9199	91	99	185	196
9SS6-CCT96103	96	103	190	201
9SS6-CCT99107	99	107	194	202
9SS6-CCT103111	103	111	199	204
9SS6-CCT107115	107	115	203	208
9SS6-CCT111119	111	119	208	213
9SS6-CCT115123	115	123	213	217
9SS6-CCT119128	119	128	217	221

Single Cable Cleat with LSF Pad

1. Recommended for installations where the highest levels of short circuit withstand are required.
2. Short circuit current tested in accordance with BS EN 50368:2003 standard.
3. Available for single and trefoil cable applications.
4. LSF-pad incorporate an integral low smoke, low fume, zero halogen pad.
5. Hardware to attach cleat to rung attachment bracket is included with cleat. Bracket must be ordered separately.

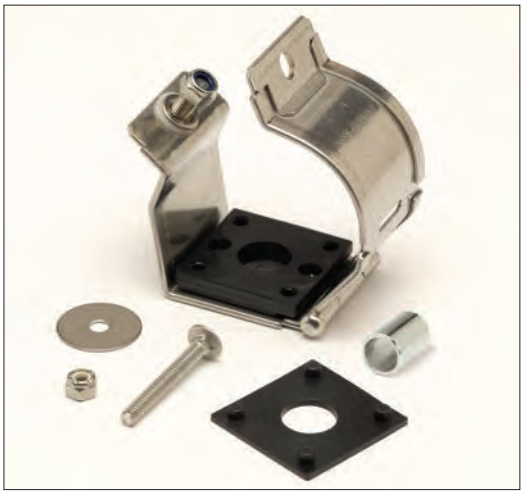

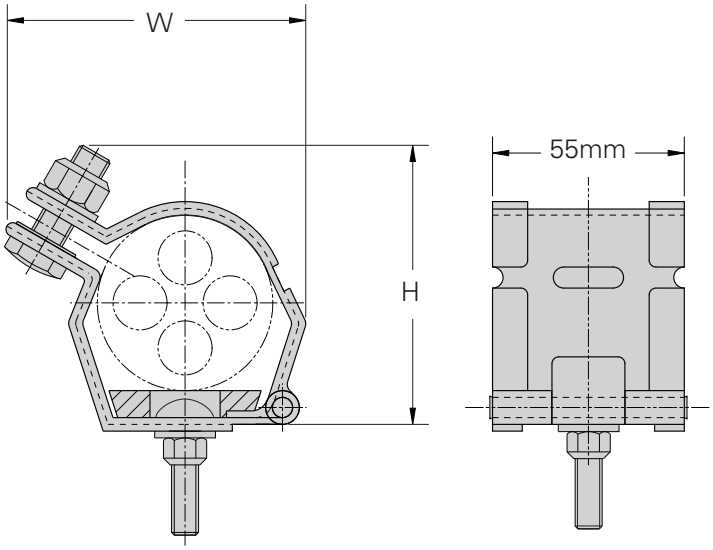

BS EN 50368:2003 (Cable Cleats for Electric Installations) Classification	
Cleat Type	Composite
Resistance to Electromechanical Force	130 kA peak / 50 kA RMS 600 mm spacing
Lateral Load Test	3.439 kg average
Axial Load Test	Pass
Operating Temperature Range	-40°C to +60°C
Impact Resistance	Very Heavy
Needle Flame Test	30 seconds

Technical Specifications	
Frame	50mm x 2mm Marine grade, Non-magnetic 316L
Closure Hardware	Captive 316 Stainless Steel M8 or M10 (M12 available) bolt and nylon-lock nut (Optional Hex Flange Lock Nut available)
Integral Pad	Low Smoke, Low Fume, Zero Halogen
Tools Required	Impact Wrench
Mounting Bolt	Provided with Cable Cleat

	Cable Range (mm)		Dimensions (mm)	
Part No.	Min. Dia.	Max. Dia.	H	W
9SS6-CCS2832	28	32	61	55
9SS6-CCS3034	30	34	63	57
9SS6-CCS3236	32	36	65	59
9SS6-CCS3438	34	38	67	61
9SS6-CCS3640	36	40	17	63
9SS6-CCS3842	38	42	69	65
9SS6-CCS4044	40	44	71	67
9SS6-CCS4246	42	46	72	69
9SS6-CCS4448	44	48	74	71
9SS6-CCS4650	46	50	75	73
9SS6-CCS4852	48	52	77	75
9SS6-CCS5054	50	54	79	77
9SS6-CCS5256	52	56	80	79
9SS6-CCS5458	54	58	81	81
9SS6-CCS5660	56	60	83	83
9SS6-CCS5862	58	62	85	85
9SS6-CCS6064	60	64	86	87
9SS6-CCS6266	62	66	88	89
9SS6-CCS6468	64	68	90	91
9SS6-CCS6670	66	70	91	93

	Cable Range (mm)		Dimensions (mm)	
Part No.	Min. Dia.	Max. Dia.	H	W
9SS6-CCS6872	68	72	93	95
9SS6-CCS7074	70	74	95	97
9SS6-CCS7276	72	76	97	99
9SS6-CCS7478	74	78	99	101
9SS6-CCS7680	76	80	101	103
9SS6-CCS7682	76	82	103	105
9SS6-CCS8084	80	84	105	107
9SS6-CCS8286	82	86	107	109
9SS6-CCS8488	84	88	109	111
9SS6-CCS8690	86	90	110	113
9SS6-CCS8892	88	92	113	117
9SS6-CCS9094	90	94	116	120
9SS6-CCS9296	92	96	126	127
9SS6-CCS94104	94	104	135	133
9SS6-CCS100112	100	112	140	139
9SS6-CCS106118	106	118	145	145
9SS6-CCS112124	112	124	153	155
9SS6-CCS118130	118	130	162	165
9SS6-CCS127139	127	139	161	167
9SS6-CCS132144	132	144	165	173
9SS6-CCS138150	138	150	170	179

Step 1: Know Your Cables

- What type of cable is being used?
  - Single or Multi-conductor
- What is the outside diameter of the cable(s)?
- What is the cable arrangement (single conductor cables only)?
  - Flat or Trefoil
- If a ground wire will be installed within the cleat, you will need the ground wire outside diameter.

Step 2: Know Your System

- What is the available short circuit current (RMS or i_p (peak))?
- What type of B-Line cable ladder is installed?

Step 3: Select Your Cable Cleats

- See Pages CC-2 & CC-3

Step 4: Select Your Mounting Bracket

Mounting brackets are used to attach cable cleats to the rungs of the ladder type cable ladders. Your ladder type will determine the mounting bracket used.

B-Line Ladder Types	Mounting Bracket
Aluminum welded rung ladders with standard rungs. Steel Series 2, 3, 4 or 5, ladders with standard rungs Fiberglass ladders with standard rungs	**9SS6-CCB-C**
Steel ladders with strut rungs Aluminum ladders with "Marine Rungs"	**9SS6-CCB-B**
Steel Series 1 ladders with standard rungs	**9SS6-CCB-A**

9SS6-CCB-A

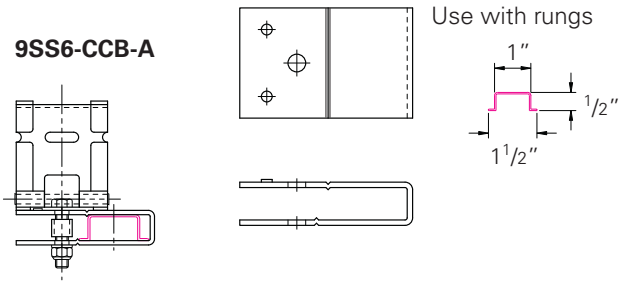

9SS6-CCB-B

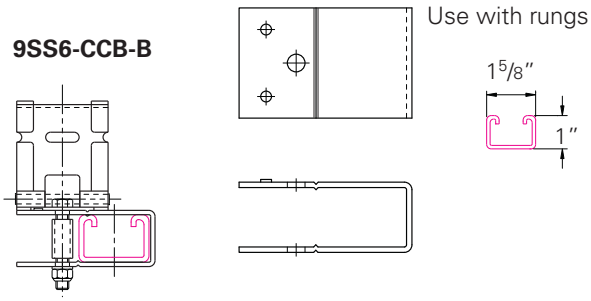

9SS6-CCB-C

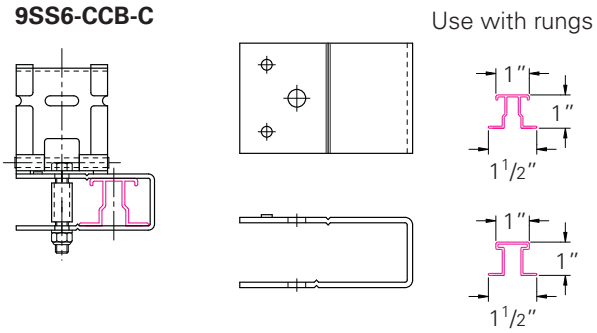

Step 5: Determine Cleat Spacing for Installation

Your cable diameter is equal to the spacing between conductor centers shown below. Find your cable diameter at the top of the table and look down at the column below it. Find the value equal to or greater than the available short circuit for your system.

Single Conductor Short Circuit Withstand Table

Max. Cable Cleat Spacing (A)		Spacing Between Conductor Centers (mm)											
		23	25	27	29	31	33	35	37	39	41	43	45
mm	In.	i_p peak (kA)											
225	9	179	187	194	203	209	216	220	229	234	240	246	250
300	12	155	163	168	174	181	187	192	198	203	209	214	215
450	18	128	133	137	144	148	152	157	161	165	170	174	178
600	24	110	115	119	124	128	132	135	139	143	148	150	153
675	27	104	108	113	117	121	124	128	132	135	139	143	147
900	36	89	93	97	102	104	108	110	115	117	121	124	127

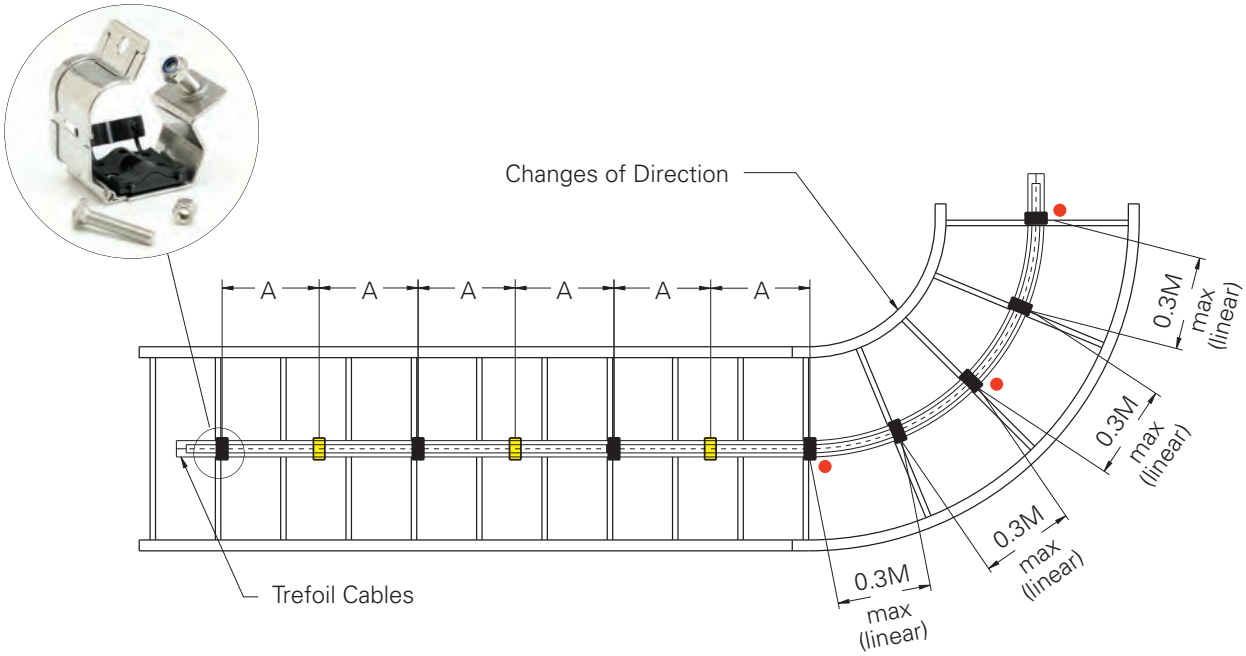

IMPORTANT: Recommended Installation Procedures

It is important that the cleats are installed properly to secure your cables:

- It is not necessary for every cleat to be attached to the ladder. Every other cleat (■) must be attached to the ladder system to mount cable in ladder. Unattached cleats (▮) provide additional restraint to keep cables bundled.
- The bend radius should be 8 to 12 times the cable diameter.
- Cleats should always be installed at the beginning, middle and end of a bend (●), and at no time should the distance between cleats on a bend be more than 0.3M center to center.

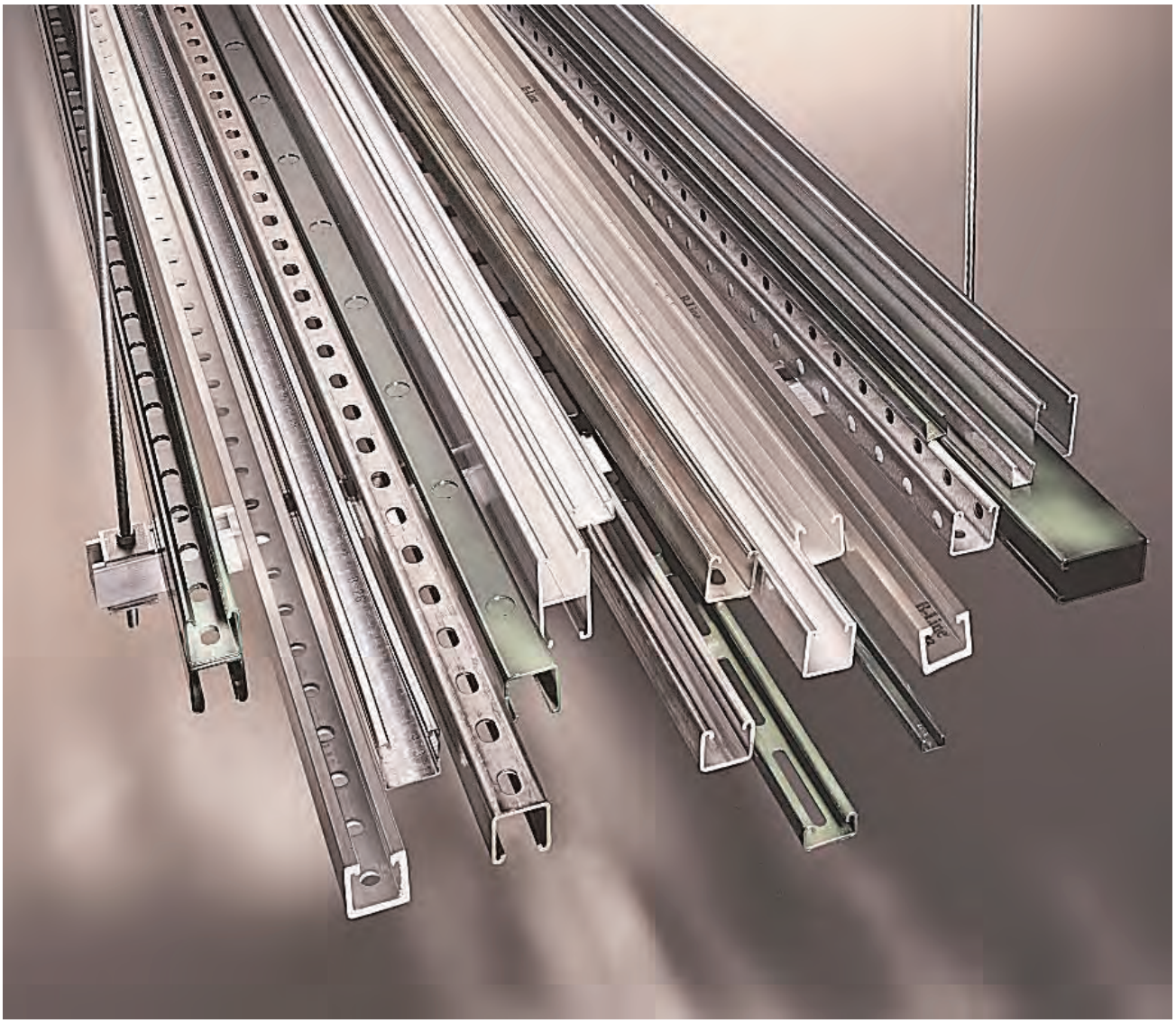

B-Line strut support systems are designed with many time-saving features. They are fully adjustable and reusable, with a complete line of channels, fittings and accessories for multi-purpose applications.

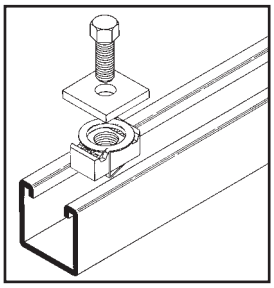

No Welding - No Drilling - Multiple Applications

- Installs quickly
- No special tools required
- Use wrench and hacksaws
- Can be taken apart and re-used
- Provides the strength of a welded system
- Helps save time by eliminating welding and drilling

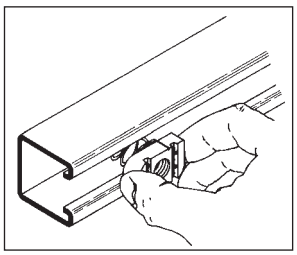

1. **Channel nut may be inserted anywhere along continuous slot. Designed for easy insertion and self-alignment.**

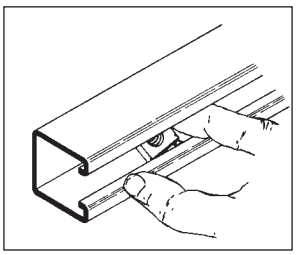

2. **A 90° turn aligns channel nut grooves with inturned lips of the channel.**

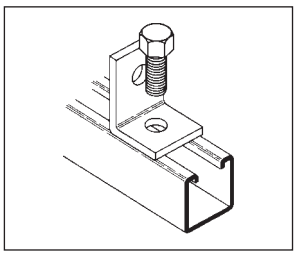

3. **Position fitting over channel nut and insert bolt to start any connection.**

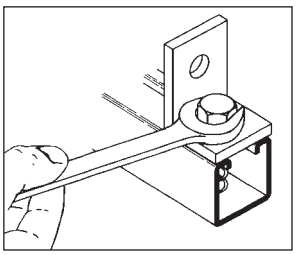

4. **With the twist of a wrench, channel nut locks its teeth firmly against inturned lips.**

B-Line strut systems provide an economical solution for electrical, mechanical and industrial supports with an unlimited variety of applications in the construction industry.

Electrical Applications
- Lighting Fixture Supports
- Raceway Systems
- Trapeze Hangers
- Pipe & Conduit Supports
- Cable Tray Supports
- Beam Adjustments

Mechanical Applications
- Piping Racks
- Tunnel Pipe Stanchions
- Concrete Inserts
- Beam Attachments
- Pipe Risers

Industrial Applications
- Racks and Shelving
- Partitions
- Production Line Supports
- Trolley Systems
- Wall Framing

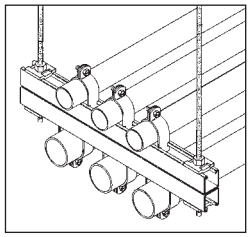

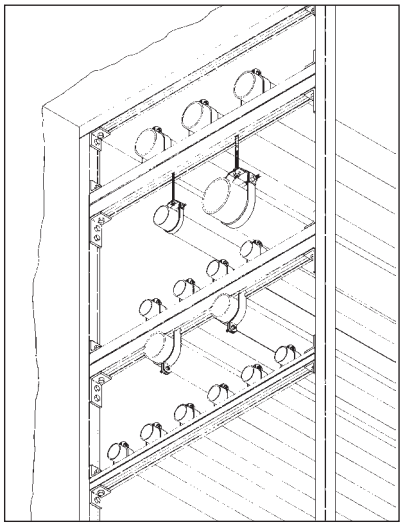

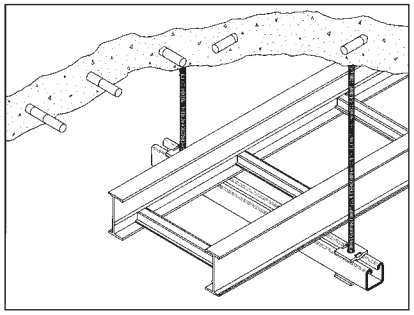

Materials

Carbon Steel
Channels made from high-quality carbon steel are continuously roll formed to precise dimensions. By cold working the steel mechanical properties are increased, allowing lightweight structures to carry the required load. Corrosion resistance of carbon steel varies widely with coating and alloy. See "Finishes" for more detailed information.

Stainless Steel
Stainless steel channel is available in AISI Type 316 material. Type 316 is non-magnetic and belongs to the austenitic stainless steels group, based on alloy content and crystallographic structure. Like carbon steel, stainless steel exhibits increased strength when cold worked by roll-forming.

Several conditions make the use of stainless steel ideal. These include reducing long term maintenance costs, high ambient temperatures, appearance, and stable structural properties such as yield strength, and high creep strength.

Type 316 resists most organic chemicals, dye stuffs and a wide variety of inorganic chemicals at elevated or cryogenic temperatures. Type 316 contains nickel and molybdenum to give it better corrosion resistance in chloride and sulfuric acid environments. More specific information concerning Type 316 is available from B-Line.

Finishes

Zinc Coatings
Zinc protects steel in two ways. First it protects the steel as a coating and second as a sacrificial anode to repair bare areas such as cut edges, scratches, and gouges. The corrosion protection of zinc is directly related to its thickness and the environment. This means a 5µm coating will last twice as long as a 2.5µm coating in the same environment.

Galvanizing also protects cut and drilled edges.

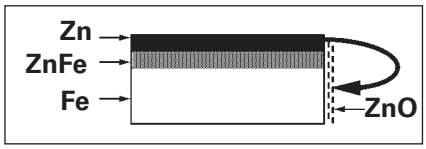

Electrogalvanized Zinc
Electrogalvanized Zinc (also known as zinc plated or electroplated) is the process by which a coating of zinc is deposited on the steel by electrolysis from a bath of zinc salts.

A rating of Fe/ZN 5 also known as SC1, B-Line hardware standard, provides a minimum zinc coating thickness of 5µm.

When exposed to air and moisture, zinc forms a tough, adherent, protective film consisting of a mixture of zinc oxides, hydroxides, and carbonates. This film is in itself a barrier coating which slows subsequent corrosive attack on the zinc. This coating is usually recommended for indoor use in relatively dry areas, as it provides ninety-six hours protection in salt spray testing per AS 2331.3.1 / ASTM B117.

Hot Dip Galvanized After Fabrication (Hot dip galvanized or batch hot dip galvanized)

Hot dip galvanized strut products are fabricated from steel and then completely immersed in a bath of molten zinc. A metallic bond occurs resulting in a zinc coating that completely coats all surfaces, including edges and welds.

Another advantage of this method is coating thickness. Strut products that are hot dip galvanized after fabrication have a minimum thickness of 460g/m^2 on each side, or a total 920g/m^2, according to AS/NZS 4680 / ASTM A123.

The zinc thickness is controlled by the amount of time each part is immersed in the molten zinc bath as well as the speed at which it is removed. The term "double dipping" refers to parts too large to fit into the galvanizing kettle; therefore, must be dipped one end at a time. It does not refer to extra coating thickness.

The layer of zinc which bonds to steel provides a dual protection against corrosion. It protects first as an overall barrier coating. If this coating happens to be scratched or gouged, zinc's secondary defense is called upon to protect the steel by galvanic action.

Hot-Dip Galvanized After Fabrication is recommended for prolonged outdoor exposure and will usually protect steel for 20 years or more in most atmospheric environments and in many industrial environments. For best results, a zinc rich paint (available from B-Line) should be applied to field cuts. The zinc rich paint will provide immediate protection for these areas and eliminate the short time period for galvanic action to "heal" the damaged coating.

Anticipated Life of Zinc Coatings In Various Atmospheric Environments

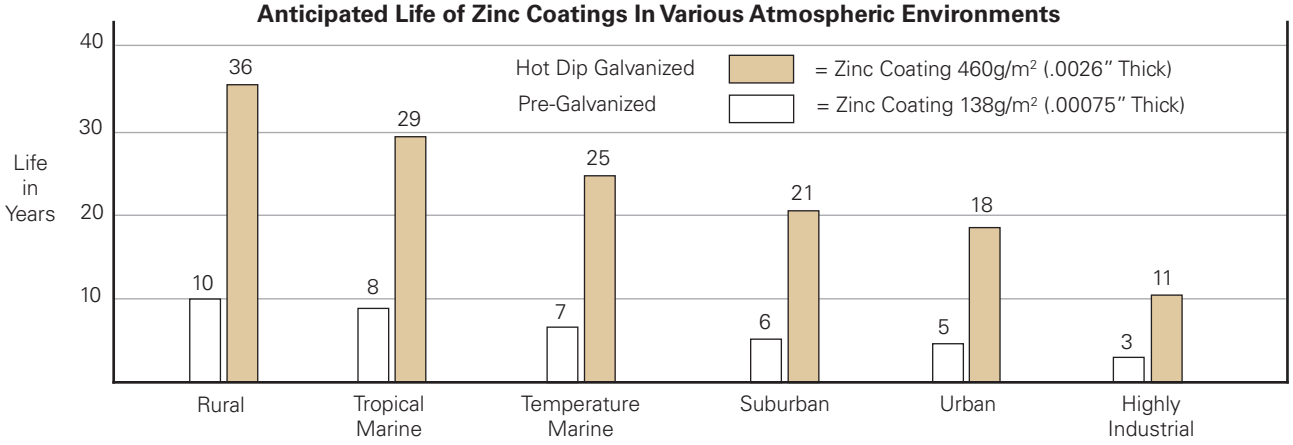

Welding

The welding procedures used in the fabrication of B-Line steel products are in accordance with recognized industry standards. To achieve the highest quality in our manufacturing processes, our welders are 3rd party certified.

MIG Welding

MIG welded, more properly called gas metal arc welded (GMAW) combination channels and fittings, are produced when physical dimensions or certain combinations require a weld process other than automatic spot welding. The same quality control requirements are imposed on MIG welded and spot welded products.

Quality Assurance

Our Quality Assurance Program has been developed and implemented for compliance with ISO 9001:2008. B-Line also complies with various industry standards and specifications.

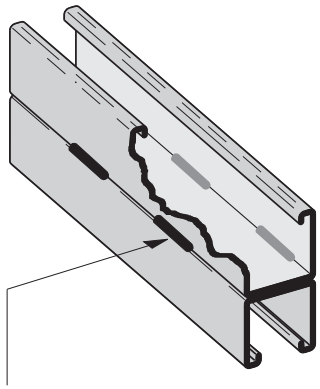

MIG Weld

CORROSION

All metal surfaces are affected by corrosion. Depending on the physical properties of the metal and the environment to which it is exposed, chemical or electromechanical corrosion may occur.

Atmospheric Corrosion

Atmospheric corrosion occurs when metal is exposed to airborne liquids, solids or gases. Some sources of atmospheric corrosion are moisture, salt, dirt and sulphuric acid. This form of corrosion is typically more severe outdoors, especially near marine environments.

Chemical Corrosion

Chemical corrosion takes place when metal comes in direct contact with a corrosive solution. Some factors which affect the severity of chemical corrosion include: chemical concentration level, duration of contact, frequency of washing, and operating temperature.

Storage Corrosion

Wet storage stain (white rust) is caused by the entrapment of moisture between surfaces of closely packed and poorly ventilated material for an extended period. Wet storage stain is usually superficial, having no affect on the properties of the metal.

Light staining normally disappears with weathering. Medium to heavy build up should be removed in order to allow the formation of normal protective film. Proper handling and storage will help to assure stain-free material. If product arrives wet, it should be unpacked and dried before storage. Dry material should be stored in a well ventilated "low moisture" environment to avoid condensation formation. Outdoor storage is undesirable, and should be avoided whenever possible.

GALVANIC SERIES IN SEA WATER

Anodic End

More Anodic

Magnesium
Magnesium Alloys
Zinc
Beryllium
Aluminum - Zinc Alloys (7000 series)
Aluminum - Magnesium Alloys (5000 series)
Aluminum (1000 series)
Aluminum - Magnesium Alloys (3000 series)
Aluminum - Magnesium - Silicon Alloys (6000 series)
Cadmium
Aluminum - Copper Alloys (2000 series)
Cast Iron, Wrought Iron, Mild Steel
Austenitic Nickel Cast Iron
Type 410 Stainless Steel (active)
Type 316 Stainless Steel (active)
Type 304 Stainless Steel (active)
Naval Brass, Yellow Brass, Red Brass
Tin
Copper
Lead-Tin Solders
Admiralty Brass, Aluminum Brass
Manganese Bronze
Silicon Bronze
Tin Bronze
Type 410 Stainless Steel (passive)
Nickel - Silver
Copper Nickel Alloys
Lead
Nickel - Aluminum Bronze
Silver Solder
Nickel 200
Silver
Type 316 Stainless Steel (passive)
Type 304 Stainless Steel (passive)
Incoloy 825
Hastelloy B
Titanium
Hastelloy C
Platinum
Graphite

Cathodic End

Metals in descending order of activity in the presence of an electrolyte.

Galvanic Corrosion

Galvanic corrosion occurs when two or more dissimilar metals are in contact in the presence of an electrolyte (ie. moisture). An electrolytic cell is created and the metals form an anode or a cathode depending on their relative position on the Galvanic Series Table. The anodic material will be the one to corrode. Anodic or cathodic characteristics of two dissimilar metals will depend on the type of each material. For example: If zinc and steel are in contact, the zinc acts as the anode and will corrode; the steel acts as the cathode, and will be protected. If steel and copper are in contact, the steel is now the anode and will corrode.
The rate at which galvanic corrosion occurs depends on several factors:

1. The relative position on the Galvanic Series Table - the further apart materials are in the Galvanic Series Table, the greater the potential for corrosion of the anodic material.

2. The amount and concentration of electrolyte present - an indoor, dry environment will have little or no galvanic corrosion compared to a wet atmosphere.

3. The relative size of the materials - a small amount of anodic material in contact with a large cathodic material will result in greater corrosion. Likewise, a large anode in contact with a small cathode will decrease the rate of attack.

Design of Strut Systems

Beams
Beams are usually defined as horizontal members which are subjected to vertical loads such as shelves, platforms or supports for pipes, conduits or cable ladders. The following is a brief overview of common beam configurations.

Simple Beam
An example of a simple beam is a length of channel placed across two cylinders. When a load is applied, the channel will support the load because of its stiffness. The cylinders serve to support the channel, but do not interfere with its natural tendency to flex or bend. Simple beam analysis is used almost universally for beam comparisons, even though it is seldom practical in field installations.

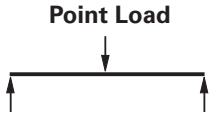

A cable ladder or conduit trapeze hanger closely resembles a simple beam.

Fixed Beam
This type of fixed support restricts the movement of the ends of the channel when a load is applied. Because of this, the stiffness of the channel at the ends and center is employed to resist the load. The result is a load capability which is greater than that of an identical simple beam.

The fixed beam can be approximated by bolting or welding a length of channel to rigid supports.

Cantilever Beam
Cantilever beams are often viewed as variations of a fixed beam, but they have special characteristics of their own. One end of the channel is firmly attached to a rigid support while the other end remains completely free.

A shelf bracket is an example of a cantilever beam.

Continuous Beam
This beam configuration is commonly used in lighting installations. The continuous beam possesses traits of both the simple and fixed beams. When equal loads are applied to all spans simultaneously, the counter-balancing effect of the loads on both sides of a support restricts the movement of the channel at the support, similar to that of the fixed beam. The end spans behave substantially like simple beams.

Continuous beam installations can typically support 20% more load than a simple beam of the same span with approximately half the deflection.

Therefore, simple beam data should be used for a general comparison only. An example of this configuration is found in a long run of channel when installed across several supports to form a number of spans.

Deflection
Deflection, commonly referred to as "sag", is inherent in applying a load to a beam and cannot be avoided. Any and all beams will deflect when loaded. The amount of deflection will vary depending upon the material and the stiffness or moment of inertia. The deflection equations in this section show that increasing the stiffness can be increased by a variety of methods. Increasing the depth of the channel is the most direct method.

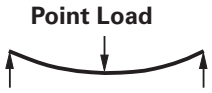

The material used affects deflection in a manner which is significantly different from the way in which it affects load capacity. The deflection under load is inversely proportional to a material property known as the "modulus of elasticity" designated by "E".

The modulus of elasticity is dependent upon the basic composition of the material and is not necessarily related to the material's strength.

Safety Factor
The design loads given for strut beam loads are based on a simple beam condition using allowable stress of 172 MPa. This allowable stress results in a safety factor of 1.68. This is based upon a virgin steel minimum yield strength of 227 MPa cold worked during rolling to an average yield stress of 289 MPa.

Aluminum typically has an elastic modulus which is $^{1}/_{3}$ that of steel even though they may have identical strength. As a result, the deflection of aluminum channel will be three times that of steel channel under equal loading. In areas where structures will be subject to general viewing, deflection can produce a displeasing effect. To the untrained eye, a sagging channel may appear to be a result of poor design or excessive loading. This is not usually the case. Many properly designed channel installations will show a noticeable deflection at their designed loads. In areas where cosmetics are not important, deflection should not be a factor. Designing an entire installation based on minimal deflection could result in an over designed structure. This translates into increased material and installation cost. Where cosmetics are important, it may be necessary to limit the deflection to an aesthetically pleasing amount. This "acceptable deflection" amount is typically given as a fraction of the span. **1/240 span** deflection is typically the limit where the amount of deflection appears negligible. For example, a beam span of 6000mm would be allowed 25mm (6000/240) of deflection at the mid point. A 3000mm span would only be allowed 12.5mm (3000/240) of deflection. The maximum load for the channel must be limited in order to remain under these deflection requirements. The allowable load resulting in 1/240 span deflection is posted in the beam load chart for each channel size.

For even more stringent deflection requirements, an allowable load is listed in the beam load charts which results in **1/360** span deflection. This amount of deflection is sometimes used for beams in finished ceilings that are to be plastered.

Twisting & Lateral Bracing

Loading of strut on long spans can cause torsional stress, resulting in the tendency of the strut to twist or bend laterally. This phenomenon reduces the allowable beam loads as shown in the beam loading charts. It is recommended that long spans be supported in a manner to prevent twisting (fixed ends), and that the channel have adequate lateral bracing. Many typical strut applications provide this support and bracing inherently. Piping, tubing, cable ladders, or conduits mounted to the strut with straps and clamps prevent twisting or lateral movement. If no such lateral support exists, contact the factory for loading recommendations.

Columns

Columns are vertical members which carry loads in compression. One common example of a channel column is the vertical members of a storage rack.
In theory, a column will carry a load equal to its cross sectional area multiplied by the ultimate compressive stress of the material of which the column is made. In reality, there are many factors affecting the load capacity of a column, such as the tendency to buckle or twist laterally (torsional-flexural buckling), the type of connection at the top or bottom, the eccentricity of the load application, and material imperfections. Several of these failure modes have been considered in the allowable column load tables shown in the "Channel" section of this catalog.

B-Line strongly recommends that the engineer perform a detailed study of the many variable conditions before the selection process begins.

Design Factors to be Considered

The loading capacity of channel depends primarily on the material, its cross-sectional design, and the beam or column loading configuration. It should be noted that if two lengths of channel have identical designs and configurations, the one made of the stronger base material will support a larger load. Therefore, any comparison of channel should begin by determining whether the materials are approximately equal in strength.

The column loading chart for each channel lists the allowable load for each channel in compression. This load varies depending on the support condition or "K-factor".
Several "K-factors" are listed, which correspond to the following support conditions:

K = .8 pinned top - fixed bottom
K = .65 fixed top - fixed bottom
K = 1.0 pinned top - pinned bottom
K = 1.2 free top - fixed bottom

There are a number of physical properties which are important to the complete design of a channel member; the "section modulus" designated as "Sx" or "Sy", "moment of inertia" designated by "Ix" or "Iy", and the "radius of gyration" which is given as "rx" or "ry".

Every structural material has its own maximum or ultimate stress, which is usually expressed in pascals. Any load which causes a member to fail is referred to as its "ultimate" load. In order to prevent channel from being accidentally loaded up to or beyond its ultimate load, a safety factor is included into the design. The ultimate load is divided by the safety factor to obtain the "recommended" or "allowable" working load.

When evaluating channel under various beam conditions, it is often more convenient to compare in terms of the ultimate or recommended "bending moment". Simple equations show the stress is directly proportional to the bending moment.

Therefore, comparing bending moments can save time in repeated calculations. The chart containing Formulas on Common Beam Loadings (following page) shows how to calculate the bending moment for various configurations and load conditions. It should be noted that the bending moment is usually not constant, but varies along the length of the span. However, the channel must be designed for a single point, which is the point of maximum bending moment.

For information regarding dynamic or seismic design, contact Eaton's B-Line's Business.

General Information

Torque

The torque values given throughout the catalog are to be used as a guide only. The relationship between the applied torque or torque wrench reading and the actual tension created in the bolt may be substantially different. For example, a dry non-lubricated bolt with a heavy plating may rate 50% as efficient as a bolt which is lubricated with a mixture of heavy oil and graphite. Other important factors affecting torque-tension relationships include friction under the bolt head or nut, hole tolerances, and torque wrench tolerances. Accuracy of many commercial torque wrenches may vary as much as plus or minus 25%.

Charts and Tables

Charts and tables in this section are compiled from information published by nationally recognized organizations and are intended for use as a guide only. B-Line recommends that users of this information determine the validity of such information as applied to their own application.

Recommended Strut System Specification

Brackets [ ] indicate alternative specifications which may be substituted by the project engineer.

PART 1 - GENERAL

1.01 WORK INCLUDED

A. Continuous slot, bolted metal framing channels and all associated fittings and hardware.

B. Trapeze type supports for cable ladder, conduit, pipe and other similar systems.

C. Use of bolted metal framing as a surface metal raceway.

1.02 REFERENCES

A. AS/NZS 4680 / ASTM A123 - Specification for Zinc (hot-dip galvanized) Coatings on Products Fabricated from Rolled, Pressed, and Forged Steel Shapes, Plates, Bars and Strips.

B. AS/NZS 1594 / ASTM A1011 - Specification for Steel, Sheet and Strip, Carbon, Hot-Rolled, Structural Quality.

C. AS 1789 / ASTM B633 - Specification for Electrodeposited Coatings of Zinc on Iron and Steel.

D. AS/NZS 1594 / ASTM A1018 - Standard Specification for Steel, Sheet and Strip, Heavy-Thickness Coils, Carbon, Hot-Rolled, Structural Quality.

E. MFMA - Metal Framing Standards Publication, MFMA-4.

1.03 QUALITY ASSURANCE

A. Manufacturers : Firms regularly engaged in the manufacture of bolted metal framing of the types required, whose products have been in satisfactory use in similar service for not less than 5 years.

B. For stainless steel items, the part number shall contain a material designator (EXAMPLE: B-Line B22SS6 for type 316 or B22SS4 for type 304), or a separate stamp shall be included to reference the type of material used.

C. MFMA Compliance: comply with the latest revision of MFMA Standard Publication Number MFMA-4, "Metal Framing".

D. NEC Compliance: Comply with the latest revision NFPA 70 - Article 352 "Surface Metal Raceways and Surface Nonmetallic Raceways".

1.04 SUBMITTALS

A. Submit drawings of strut and accessories including clamps, brackets, hanger rods and fittings.

B. Submit manufacturer's product data on strut channels including, but not limited to, types, materials, finishes, gauge thickness and hole patterns. For each different strut cross section, submit cross sectional properties including Section Modulus (S_x) and Moment of Inertia (I_x).

1.05 DELIVERY, STORAGE AND HANDLING

A. Deliver strut systems and components carefully to avoid breakage, denting, and scoring finishes. Do not install damaged equipment.

B. Store strut systems and components in original cartons and in clean dry space; protect from weather and construction traffic.

PART 2 - PRODUCTS

2.01 ACCEPTABLE MANUFACTURERS

A. Manufacturer: Subject to compliance with these specifications, strut systems to be installed shall be as manufactured by Eaton's B-Line Business [or engineer approved equal.]

2.02 STRUT CHANNELS AND COMPONENTS

A. General: Strut shall be 41mm wide in varying heights and welded combinations as required to meet load capacities and designs indicated on the drawings.

B. Material and Finish: Material and finish specifications for each strut type are as follows:

1. Hot-Dip Galvanized Steel: Strut shall be made from structural quality steel meeting the minimum mechanical properties of AS/NZS 1594 / ASTM A1011 and shall be hot-dip galvanized after fabrication in accordance with AS/NZS 4680 / ASTM A123. Fittings shall be manufactured from steel meeting the minimum requirements of AS/NZS 1594 / ASTM A1018, and hot-dip galvanized after fabrication in accordance with AS/NZS 4680 / ASTM A123. All hardware shall be stainless steel Type 316 or hot-dip galvanized AS 1214 / ASTM A153.

2. Stainless Steel: All strut, fittings and hardware shall be made of stainless steel Type 316 as indicated. Channels must be identified as required in previous section 1.03 Quality Assurance.

PART 3 - EXECUTION

3.01 INSTALLATION

A. Install strut as indicated; in accordance with equipment manufacturer's recommendations, and with recognized industry practices.

B. All nuts and bolts shall be tightened to the following values.

Bolt Size	Torque (Nm)
M6	12
M8	17
M10	36
M12	62

Design Load Data (For typical channel-fitting connections when used in pairs).

Channel Thickness	90° Fittings					
	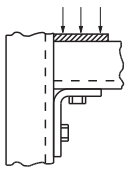	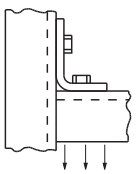	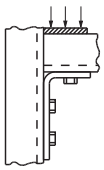	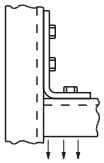	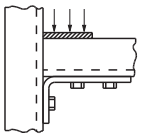	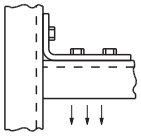
2.6mm	6.67kN	4.45kN	8.90kN	6.67kN	6.67kN	4.45kN

Channel Thickness	90° Fittings				Flat Fittings	
	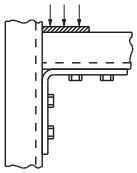	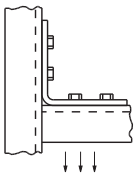	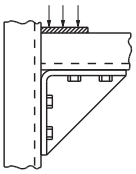	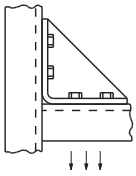	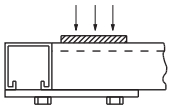	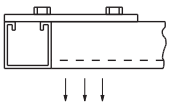
2.6mm	11.12kN	8.90kN	13.34kN	11.12kN	4.45kN	4.45kN

Design load data includes a safety factor of 2.5 (safety factor = ratio of ultimate load to design load).

Channel
B-Line channel is cold formed on our modern rolling mills from 2.6mm low carbon steel strips. A continuous slot with inturned lips provides the ability to make attachments at any point.

Lengths & Tolerances
All channels excluding 'SH' style
± 3.2mm on 3m and
± 4.76mm on 6m
All 'SH' channels only
± 6.35mm on 3m and
± 12.70mm on 6m
Custom lengths are available upon request.

Slots
B-Line slotted series of channels offer full flexibility. A pre-punched slot pattern eliminates the need for precise field measuring for hole locations.

Materials & Finishes (Unless otherwise noted)
Steel: Plain & Pre-galvanized
2.6mm thick

Finish Code	Finish	Specification
PLN	Plain	AS/NZS 1594 / ASTM A1011
HDG	Hot-Dipped Galvanized	AS/NZS 4680 / ASTM A123
SS6	Stainless Steel	Type 316

Note: A minimum order may apply on special material and finishes.

Design Load (Steel & Stainless Steel)
The design loads given for strut beam loads are based on a simple beam condition using an allowable stress of 172 MPa. This allowable stress results in a safety factor of 1.68. This is based upon virgin steel minimum yield strength of 227 MPa cold worked during rolling to an average yield stress of 289 MPa.
For aluminum channel loading multiple steel loading by a factor of 0.38.

Welding
Weld spacing is maintained at 76mm on center. Through high quality control testing of welded channels and continuous monitoring of welding equipment, We provide one of the most consistent combination channels available today.

Metric
Unless noted, all metric dimensions are in millimeters.

Channel Part Numbering

B22 SH - 3000MM HDG

Channel Type	Hole Pattern	Length	Material/Finish
B22	Blank = Solid	3000mm = 3M	HDG = Hot Dip Galvanized
B52	SH = Slotted Holes	6000mm = 6M	SS6 = Type 316 Stainless Steel

All dimensions are in millimeters unless otherwise specified.

B11

- Thickness: 2.6mm
- Standard lengths: 3m & 6m
- Standard finishes: Hot-Dipped Galvanized, Stainless Steel Type 316
- Weight: 4.54kg/m

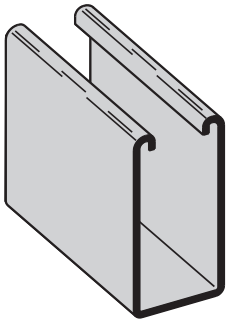

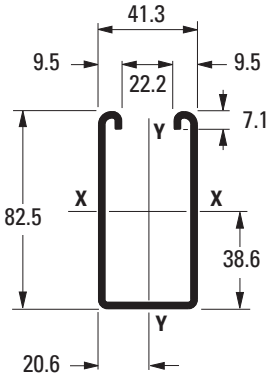

B12

- Thickness: 2.6mm
- Standard lengths: 3m & 6m
- Standard finishes: Hot-Dipped Galvanized, Stainless Steel Type 316
- Weight: 3.67kg/m

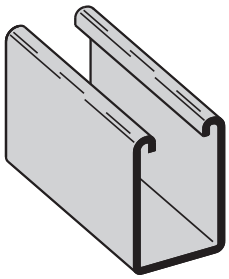

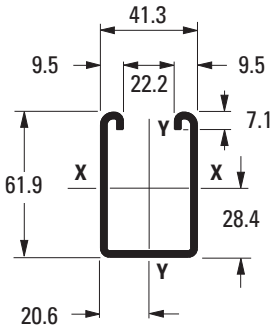

B11SH

SH Type Channel

- For beam loads use 90% of Channel Loading Chart
- Weight: 4.42kg/m

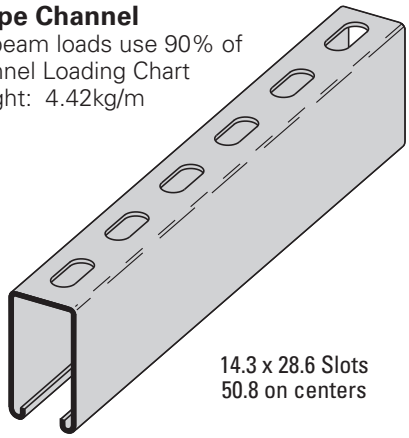

B12SH

SH Type Channel

- For beam loads use 90% of Channel Loading Chart
- Weight: 3.55kg/m

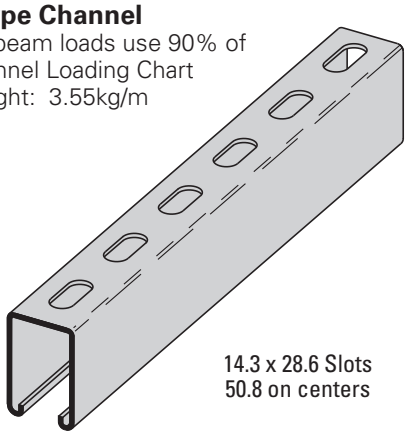

Section Properties			X - X Axis			Y - Y Axis		
Channel	Weight kg/m	Areas of Section cm^2	Moment of Inertia (I) cm^4	Section Modulus (S) cm^3	Radius of Gyration (r) cm	Moment of Inertia (I) cm^4	Section Modulus (S) cm^3	Radius of Gyration (r) cm
B11	4.55	5.81	46.63	10.61	2.83	18.14	8.79	1.77
B12	3.70	4.71	22.26	6.65	2.17	28.12	13.63	1.73

Calculations of section properties are based on metal thicknesses as determined by the AISI Cold-Formed Steel Design Manual.

All dimensions are in millimeters unless otherwise specified.

Beam & Column Loading for B11 Channel

		Beam Loading			Column Loading				
			Uniform Load @ Deflection =		Max. Loading K = .80		Max. Loading (Loaded @ C.G.)		
Beam Span mm	Uniform Load N	Deflection mm	1/240 Span N	1/360 Span N	Loaded @ C.G. N	Loaded @ Slot Face N	K = .65 N	K = 1.0 N	K = 1.2 N
609	22819	0.73	22819	22819	36431	19914	37569	34620	32521
914	15515	1.65	15515	15515	32521	18607	34865	28927	24963
1219	11636	2.97	11636	11636	27641	16827	31373	22188	16974
1524	9310	4.65	9310	8487	22188	14586	27312	15991	12410
1829	7757	6.68	7757	5894	16974	10871	22890	12410	9844
2133	6650	9.09	6494	4332	13625	8438	18384	10191	8211
2438	5818	11.89	4973	3314	11405	6814	15115	8687	7077
2743	5173	15.03	3932	2620	9844	5662	12837	7597	6232
3048	4653	18.57	3185	2122	8687	4808	11183	6770	5565**
3657	3879	26.74	2211	1472	7077	3630	8945	5565**	4564**
4267	3323	36.40	1623	1081	5992	2856	7504	4706**	3821**
4877	2909	47.52	1245	827	5191**	2308	6490	4048**	--
5486	2584	60.15	983	654	4564**	1908	5716**	--	--
6096	2326	74.27	796	529	4048**	1601	5106**	--	--

Based on simple beam condition using an allowable design stress of 172 MPa in accordance with MFMA, with adequate lateral bracing. Actual yield point of cold rolled steel is 289 MPa. To determine concentrated load capacity at mid span, multiply uniform load by 0.5 and corresponding deflection by 0.8. *Failure determined by weld shear.

**Where the slenderness ratio $\frac{KL}{r}$ exceeds 200, and K = end fixity factor, L = actual length and r = radius of gyration.

Beam & Column Loading for B12 Channel

		Beam Loading			Column Loading				
			Uniform Load @ Deflection =		Max. Loading K = .80		Max. Loading (Loaded @ C.G.)		
Beam Span mm	Uniform Load N	Deflection mm	1/240 Span N	1/360 Span N	Loaded @ C.G. N	Loaded @ Slot Face N	K = .65 N	K = 1.0 N	K = 1.2 N
305	17259	0.23	17259	17259	45105	21138	45581	44326	43397
609	14559	0.96	14559	14559	41119	20079	42876	38384	35288
914	9706	2.18	9706	9706	35288	18402	35748	30185	24785
1219	7277	3.88	7277	6321	28406	16182	33637	21285	16534
1524	5823	6.09	5823	4043	21285	13180	27957	15671	12482
1829	4853	8.76	4212	2811	16534	9773	22081	12482	10102
2133	4159	11.94	3096	2064	13576	7637	17766	10431	8509
2438	3638	15.59	2371	1579	11565	6187	14901	8981	7339
2743	3234	19.73	1873	1250	10102	5137	12869	7886	6432
3048	2913	24.36	1517	1010	8981	4346	11356	7015	5689**

Based on simple beam condition using an allowable design stress of 172 MPa in accordance with MFMA, with adequate lateral bracing. Actual yield point of cold rolled steel is 289 MPa. To determine concentrated load capacity at mid span, multiply uniform load by 0.5 and corresponding deflection by 0.8. *Failure determined by weld shear.

**Where the slenderness ratio $\frac{KL}{r}$ exceeds 200, and K = end fixity factor, L = actual length and r = radius of gyration.

All dimensions are in millimeters unless otherwise specified.

B22

- Thickness: 2.6mm
- Standard lengths: 3m & 6m
- Standard finishes: Hot-Dipped Galvanized, Stainless Steel Type 316
- Weight: 2.83kg/m

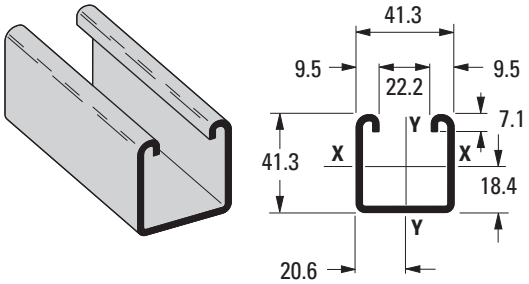

B24

- Thickness: 1.9mm
- Standard lengths: 3m & 6m
- Standard finishes: Hot-Dipped Galvanized, Stainless Steel Type 316
- Weight: 2.08kg/m

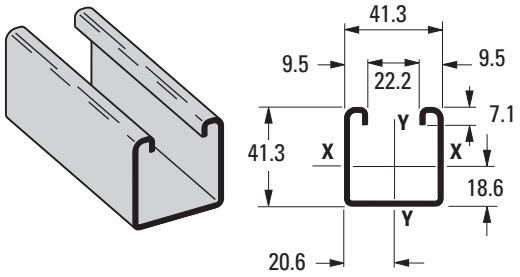

B22SH

SH Type Channel

- For beam loads use 90% of Channel Loading Chart
- Weight: 2.71kg/m

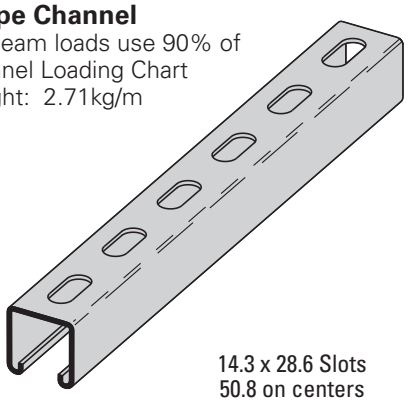

B24SH

SH Type Channel

- For beam loads use 90% of Channel Loading Chart
- Weight: 1.99kg/m

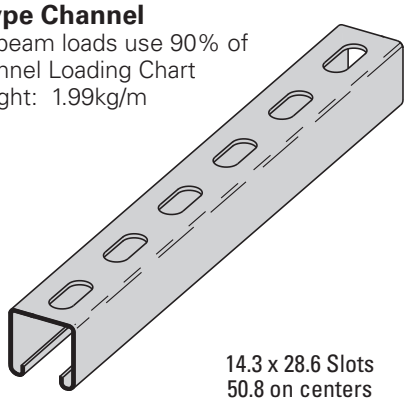

Section Properties			X - X Axis			Y - Y Axis		
Channel	Weight kg/m	Areas of Section cm^2	Moment of Inertia (I) cm^4	Section Modulus (S) cm^3	Radius of Gyration (r) cm	Moment of Inertia (I) cm^4	Section Modulus (S) cm^3	Radius of Gyration (r) cm
B22	2.84	3.62	7.96	3.48	1.48	9.99	4.84	1.66
B24	2.15	2.74	6.22	2.74	1.51	7.73	3.75	1.68

Calculations of section properties are based on metal thicknesses as determined by the AISI Cold-Formed Steel Design Manual.

All dimensions are in millimeters unless otherwise specified.

Beam & Column Loading for B22 Channel

		Beam Loading			Column Loading				
			Uniform Load @ Deflection =		Max. Loading K = .80		Max. Loading (Loaded @ C.G.)		
Beam Span mm	Uniform Load N	Deflection mm	1/240 Span N	1/360 Span N	Loaded @ C.G. N	Loaded @ Slot Face N	K = .65 N	K = 1.0 N	K = 1.2 N
305	11610	0.35	11610	11610	46502	19120	47142	45470	44260
609	7571	1.42	7571	7571	41417	17762	43597	38174	34700
914	5049	3.20	5049	3999	34700	15964	38593	28336	23985
1219	3785	5.69	3372	2246	27548	13869	32921	20987	16863
1524	3029	8.91	2157	1437	20987	11703	27103	16085	13060
1829	2522	12.83	1499	1001	16863	10071	21658	13060	10591
2133	2162	17.45	1103	734	14127	8825	17957	10947	8807
2438	1890	22.81	845	560	16583	7833	15373	9346	7433
2743	1681	28.85	667	445	10591	7006	13442	8078	6343**
3048	1512	35.63	538	360	9346	6307	11921	7041**	5462**

Based on simple beam condition using an allowable design stress of 172 MPa in accordance with MFMA, with adequate lateral bracing. Actual yield point of cold rolled steel is 289 MPa. To determine concentrated load capacity at mid span, multiply uniform load by 0.5 and corresponding deflection by 0.8. *Failure determined by weld shear.

**Where the slenderness ratio $\frac{KL}{r}$ exceeds 200, and K = end fixity factor, L = actual length and r = radius of gyration.

Beam & Column Loading for B24 Channel

		Beam Loading			Column Loading				
			Uniform Load @ Deflection =		Max. Loading K = .80		Max. Loading (Loaded @ C.G.)		
Beam Span mm	Uniform Load N	Deflection mm	1/240 Span N	1/360 Span N	Loaded @ C.G. N	Loaded @ Slot Face N	K = .65 N	K = 1.0 N	K = 1.2 N
305	5427	0.35	5427	5427	17802	9857	3952	17579	17308
609	5173	1.45	5173	5173	16636	9381	17157	15809	14838
914	3447	3.25	3447	2682	14839	8634	15920	13175	11325
1219	2584	5.79	2264	1508	12579	7813	14310	10013	7584
1524	2068	9.07	1450	965	10013	6534	12424	7130	5484
1829	1726	13.05	1450	965	7584	5351	10346	5484	4301
2133	1477	17.75	738	494	6040	4497	8233	4461	3545
2438	1294	23.19	565	378	5022	3874	6730	3767	3025
2743	1147	29.36	449	298	4301	3407	5680	3265	2633**
3048	1036	36.24	360	240	3767	3042	4915	2882	2326**

Based on simple beam condition using an allowable design stress of 172 MPa in accordance with MFMA, with adequate lateral bracing. Actual yield point of cold rolled steel is 289 MPa. To determine concentrated load capacity at mid span, multiply uniform load by 0.5 and corresponding deflection by 0.8. *Failure determined by weld shear.

**Where the slenderness ratio $\frac{KL}{r}$ exceeds 200, and K = end fixity factor, L = actual length and r = radius of gyration.

B32

- Thickness: 2.6mm
- Standard lengths: 3m & 6m
- Standard finishes: Hot-Dipped Galvanized, Stainless Steel Type 316
- Weight: 2.53kg/m

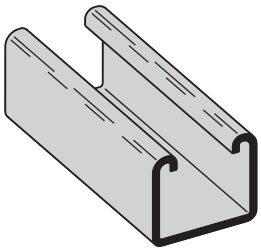

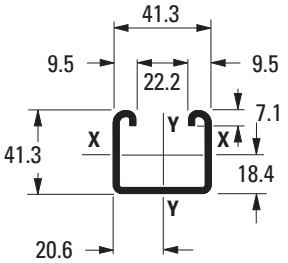

B32SH

SH Type Channel

- For beam loads use 90% of Channel Loading Chart
- Weight: 2.41kg/m

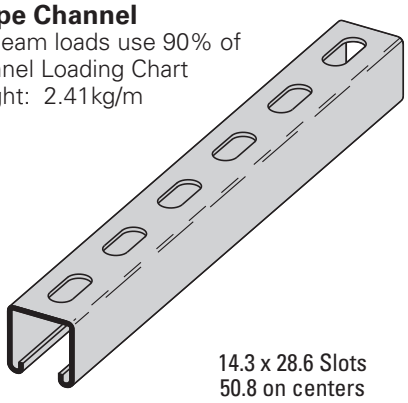

Section Properties			X - X Axis			Y - Y Axis		
Channel	Weight kg/m	Areas of Section cm^2	Moment of Inertia (I) cm^4	Section Modulus (S) cm^3	Radius of Gyration (r) cm	Moment of Inertia (I) cm^4	Section Modulus (S) cm^3	Radius of Gyration (r) cm
B32	2.58	3.29	5.21	2.67	1.26	8.73	4.23	1.63

Calculations of section properties are based on metal thicknesses as determined by the AISI Cold-Formed Steel Design Manual.

Beam & Column Loading for B32 Channel

		Beam Loading			Column Loading				
			Uniform Load @ Deflection =		Max. Loading K = .80		Max. Loading (Loaded @ C.G.)		
Beam Span mm	Uniform Load N	Deflection mm	1/240 Span N	1/360 Span N	Loaded @ C.G. N	Loaded @ Slot Face N	K = .65 N	K = 1.0 N	K = 1.2 N
305	9830	0.40	9830	9830	45719	17953	46404	44638	43383
609	5778	1.65	5778	5778	40496	16601	42702	37307	33984
914	3852	3.73	3852	2611	33984	14781	37716	29002	24131
1219	2887	6.65	2202	1468	27361	12797	32316	21253	17214
1524	2313	10.41	1410	938	21253	10831	26956	16427	13318
1829	1926	14.98	978	654	17214	9292	21898	13318	10689
2133	1650	20.39	720	480	14425	8082	18300	11071	8038**
2438	1445	26.64	551	369	12339	7090	15706	8865	6156**
2743	1285	33.70	436	289	10689	6258	13714	7001**	4862**
3048	1156	41.63	351	236	8865	5431	12112	5671**	3941**

Based on simple beam condition using an allowable design stress of 172 MPa in accordance with MFMA, with adequate lateral bracing. Actual yield point of cold rolled steel is 289 MPa. To determine concentrated load capacity at mid span, multiply uniform load by 0.5 and corresponding deflection by 0.8. *Failure determined by weld shear.

**Where the slenderness ratio $\frac{KL}{r}$ exceeds 200, and K = end fixity factor, L = actual length and r = radius of gyration.

All dimensions are in millimeters unless otherwise specified.

B42

- Thickness: 2.6mm
- Standard lengths: 3m & 6m
- Standard finishes: Hot-Dipped Galvanized, Stainless Steel Type 316
- Weight: 2.14kg/m

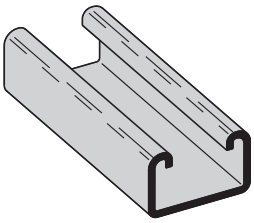

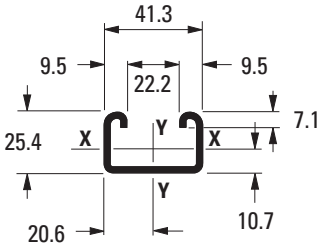

B42SH

SH Type Channel

- For beam loads use 90% of Channel Loading Chart
- Weight: 2.02kg/m

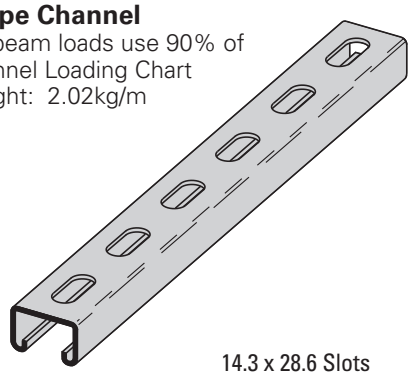

Section Properties			X - X Axis			Y - Y Axis		
Channel	Weight kg/m	Areas of Section cm^2	Moment of Inertia (I) cm^4	Section Modulus (S) cm^3	Radius of Gyration (r) cm	Moment of Inertia (I) cm^4	Section Modulus (S) cm^3	Radius of Gyration (r) cm
B42	2.18	2.79	2.31	1.59	0.91	6.85	3.32	1.57

Calculations of section properties are based on metal thicknesses as determined by the AISI Cold-Formed Steel Design Manual.

Beam & Column Loading for B42 Channel

		Beam Loading			Column Loading				
			Uniform Load @ Deflection =		Max. Loading K = .80		Max. Loading (Loaded @ C.G.)		
Beam Span mm	Uniform Load N	Deflection mm	1/240 Span N	1/360 Span N	Loaded @ C.G. N	Loaded @ Slot Face N	K = .65 N	K = 1.0 N	K = 1.2 N
305	6841	0.56	6841	6841	40648	15537	41293	39660	38566
609	3420	2.23	3420	2589	36195	13989	37988	33757	31360
914	2282	5.03	1726	1152	31360	12108	34060	26356	19283
1219	1708	8.94	970	645	24042	9906	30185	15622	10849
1524	1370	13.97	623	413	15622	7642	23451	9995	6943**
1829	1139	20.11	431	289	10849	6009	16432	6943**	4822**
2133	978	27.40	316	213	7971	4835	12072	5102**	3541**
2438	854	35.79	244	160	6103	3963	9243	3905**	--
2743	760	45.29	191	129	4822**	3305	7304	--	--
3048	685	55.93	155	102	3905**	2793	5916**	--	--

Based on simple beam condition using an allowable design stress of 172 MPa in accordance with MFMA, with adequate lateral bracing. Actual yield point of cold rolled steel is 289 MPa. To determine concentrated load capacity at mid span, multiply uniform load by 0.5 and corresponding deflection by 0.8. *Failure determined by weld shear.

**Where the slenderness ratio $\frac{KL}{r}$ exceeds 200, and K = end fixity factor, L = actual length and r = radius of gyration.

All dimensions are in millimeters unless otherwise specified.

B52

- Thickness: 2.6mm
- Standard lengths: 3m & 6m
- Standard finishes: Hot-Dipped Galvanized, Stainless Steel Type 316
- Weight: 1.89kg/m

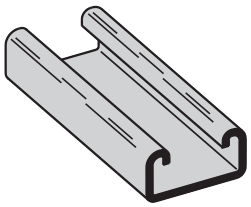

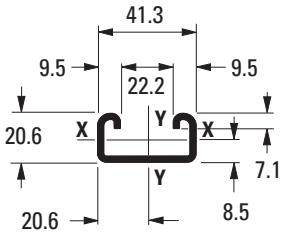

B54

- Thickness: 1.9mm
- Standard lengths: 3m & 6m
- Standard finishes: Hot-Dipped Galvanized, Stainless Steel Type 316
- Weight: 1.44kg/m

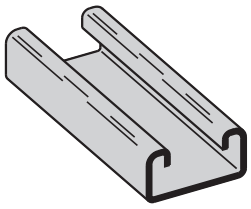

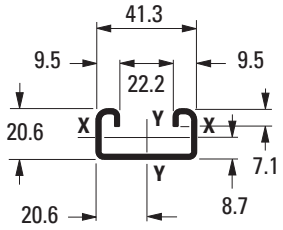

B52SH

SH Type Channel

- For beam loads use 90% of Channel Loading Chart
- Weight: 1.77kg/m

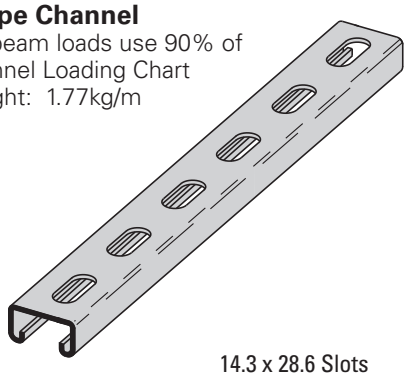

14.3 x 28.6 Slots
50.8 on centers

B54SH

SH Type Channel

- For beam loads use 90% of Channel Loading Chart
- Weight: 1.35kg/m

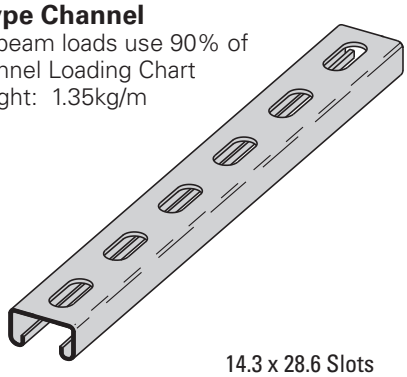

14.3 x 28.6 Slots
50.8 on centers

Section Properties			X - X Axis			Y - Y Axis		
Channel	Weight kg/m	Areas of Section cm^2	Moment of Inertia (I) cm^4	Section Modulus (S) cm^3	Radius of Gyration (r) cm	Moment of Inertia (I) cm^4	Section Modulus (S) cm^3	Radius of Gyration (r) cm
B52	1.95	2.49	1.33	1.10	0.73	5.84	2.83	1.53
B54	1.51	1.93	1.09	0.92	0.75	4.60	4.46	1.55

Calculations of section properties are based on metal thicknesses as determined by the AISI Cold-Formed Steel Design Manual.

All dimensions are in millimeters unless otherwise specified.

Beam & Column Loading for B52 Channel

		Beam Loading			Column Loading				
			Uniform Load @ Deflection =		Max. Loading K = .80		Max. Loading (Loaded @ C.G.)		
Beam Span mm	Uniform Load N	Deflection mm	1/240 Span N	1/360 Span N	Loaded @ C.G. N	Loaded @ Slot Face N	K = .65 N	K = 1.0 N	K = 1.2 N
305	4799	0.66	4799	4799	37396	14065	38001	36497	35537
609	2397	2.69	2251	1499	33446	12255	35047	29007	24007
914	1601	6.09	1001	667	24007	9572	29594	16085	11169
1219	1201	10.84	560	373	14136	6939	21285	9047	6281
1524	961	16.94	360	240	9047	5155	13705	5791	4021
1829	800	24.38	249	164	6281	3963	9515	4021**	--
2133	685	33.20	182	124	4617**	3131	6992	2953**	--
2438	600	43.36	142	93	3532**	2535	5351**	--	--
2743	534	54.86	111	75	--	2090	4230**	--	--
3048	480	67.74	89	58	--	2090	4230**	--	--

Based on simple beam condition using an allowable design stress of 172 MPa in accordance with MFMA, with adequate lateral bracing. Actual yield point of cold rolled steel is 289 MPa. To determine concentrated load capacity at mid span, multiply uniform load by 0.5 and corresponding deflection by 0.8. *Failure determined by weld shear.

**Where the slenderness ratio $\frac{KL}{r}$ exceeds 200, and K = end fixity factor, L = actual length and r = radius of gyration.

Beam & Column Loading for B54 Channel

		Beam Loading			Column Loading				
			Uniform Load @ Deflection =		Max. Loading K = .80		Max. Loading (Loaded @ C.G.)		
Beam Span mm	Uniform Load N	Deflection mm	1/240 Span N	1/360 Span N	Loaded @ C.G. N	Loaded @ Slot Face N	K = .65 N	K = 1.0 N	K = 1.2 N
305	3870	0.68	3870	3870	27516	11503	27952	26831	26053
609	2068	1.74	1913	1276	24305	10026	25635	22099	19127
914	1379	6.17	849	565	19127	8078	22432	13683	9501
1219	1036	10.97	480	320	12023	5965	17437	7695	5342
1524	827	17.17	307	204	7695	4426	11659	4924**	3420**
1829	689	24.71	213	142	5342	3394	8096	3420**	2375**
2133	591	33.63	155	102	3928**	2682	5947	2513**	--
2438	516	43.94	120	80	3007**	2166	4555**	--	--
2743	458	55.60	93	62	2375**	1784	3598**	--	--
3048	413	68.65	17	11	--	1494	2913**	--	--

Based on simple beam condition using an allowable design stress of 172 MPa in accordance with MFMA, with adequate lateral bracing. Actual yield point of cold rolled steel is 289 MPa. To determine concentrated load capacity at mid span, multiply uniform load by 0.5 and corresponding deflection by 0.8. *Failure determined by weld shear.

**Where the slenderness ratio $\frac{KL}{r}$ exceeds 200, and K = end fixity factor, L = actual length and r = radius of gyration.

All dimensions are in millimeters unless otherwise specified.

Channel Nuts

B-Line channel nut is one of the main components of our bolted metal framing system. It is designed to provide essential gripping power and ease during installation. Channel nuts are press formed, machined and hardened from steel.

Recommended Torque

Bolt Size	M6x1	M8 x1.25	M10 x 1.5	M12x1.75
Nm	12	17	36	62

Materials & Finishes*

Finish Code	Finish	Specification
ZN	Electro-Plated Zinc	AS 1897 / ASTM B633 SC1 Type III
HDG	Hot-Dipped Galvanized	AS 1214 / ASTM A153
SS6	Stainless Steel	Type 316

*Unless otherwise noted.
Note: Channel nuts are not available in HDG.

Metric

Unless noted, all metric dimensions are in millimeters.

Note: See below for resistance to slip and pull-out strength.

- Finish: ZN, SS6

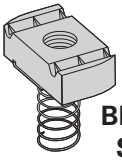

BMS-_M Series

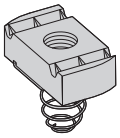

BMS-_S Series

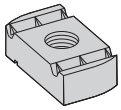

BMS-_ Series

Spring Nut

Part No.	Thread Size	Fits Channel Sizes	Nut Thickness mm	Wt./C kg
BMS-6M	M6 x 1	B22	6.3	3.13
BMS-6S	M6 x 1	B52	6.3	3.13
BMS-6	M6 x 1	B22 & B52	6.3	3.13
BMS-8M	M8 x 1.25	B22	6.3	3.04
BMS-8S	M8 x 1.25	B52	6.3	3.04
BMS-8	M8 x 1.25	B22 & B52	6.3	3.04
BMS-10M	M10 x 1.5	B22	9.5	4.35
BMS-10S	M10 x 1.5	B52	9.5	4.35
BMS-10	M10 x 1.5	B22 & B52	9.5	4.35
BMS-12M	M12 x 1.75	B22	9.5	4.17
BMS-12S	M12 x 1.75	B52	9.5	4.17
BMS-12	M12 x 1.75	B22 & B52	9.5	4.17

Resistance To Slip

- With Safety Factor of 3

Thread Size	Nut Part Numbers	2.6mm Channel ZN kN	2.6mm Channel SS6 kN	1.9mm Channel ZN kN	1.9mm Channel SS6 kN
M6 x 1	**BMS-6M, BMS-6S, BMS-6, NWM6**	1.33	0.65	1.33	0.65
M8 x 1.25	**BMS-8M, BMS-8S, BMS-8, NWM8**	2.00	1.00	2.00	1.00
M10 x 1.50	**BMS-10M, BMS-10S, BMS-10, NWM10**	3.56	1.78	2.76	1.38
M12 x 1.75	**BMS-12M, BMS-12S, BMS-12, NWM12**	6.67	3.33	4.45	2.22

Resistance to Slip of Channel Nut

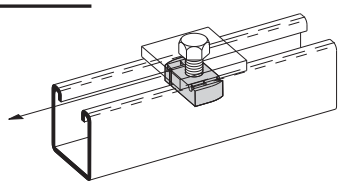

Pull-Out Strength

- With Safety Factor of 3

Thread Size	Nut Part Numbers	2.6mm Channel kN	1.9mm Channel kN
M6 x 1	**BMS-6M, BMS-6S, BMS-6, NWM6**	2.00	2.00
M8 x 1.25	**BMS-8M, BMS-8S, BMS-8, NWM8**	3.33	3.33
M10 x 1.50	**BMS-10M, BMS-10S, BMS-10, NWM10**	4.89	4.45
M12 x 1.75	**BMS-12M, BMS-12S, BMS-12, NWM12**	6.67	6.23

Pull-Out Strength of Channel Nut

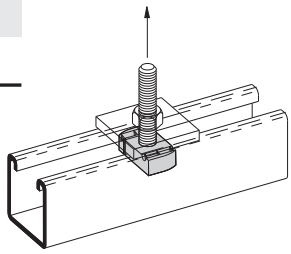

All dimensions are in millimeters unless otherwise specified.

Combo Nut Washer

- Finish: Zinc Plated (ZN) or 316 Stainless Steel (SS6) - add SS6 to part number
- To lock combo nut washer in place a hex nut (sold separately) is required

Note: See page 18 for resistance to slip & pull-out strength.

Patent Number 7,604,444

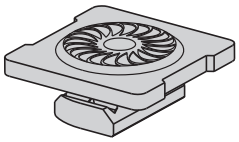

Part No.	Thread Size	Fits Channel Sizes	Nut Thickness mm	Wt./C kg
NWM6	M6	All Channel Sizes	6.3	7.50
NWM8	M8	All Channel Sizes	6.3	7.00
NWM10	M10	All Channel Sizes	9.5	8.57
NWM12	M12	All Channel Sizes	9.5	8.00

Buzznut™ Hardware

- Can be installed at any desired position on the ATR, eliminating the need to thread hex nuts up along ATR.
- Loading Safety Factor of 3.
- Torque: 8N•m
- Available in Zinc Plated (ZN) or 316 Stainless Steel (SS6).

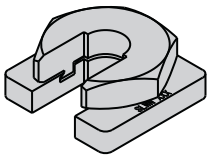

Part No.	Thread Size	Loading kN	Wt./C kg
SLWNM6	M6	0.90	6.4
SLWNM8	M8	1.70	7.4
SLWNM10	M10	2.60	7.8
SLWNM12	M12	3.70	8.6

SLN Slip On Lock Nut

- Safety Factor of 3
- Standard finish: Zinc Plated (ZN) or 316 Stainless Steel (SS6)

Part No.	Thread Size	Wt./C kg
SLNM6	M6	5.8
SLNM8	M8	6.8
SLNM10	M10	7.2
SLNM12	M12	8.0

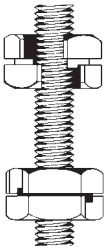

B217P
Plastic Snap Closure Strip For All 41.3mm Wide Channels

- Standard finishes: Gray (GRY) Plastic
- Standard length: 3m
- Wt./30.5m: 4.2kg

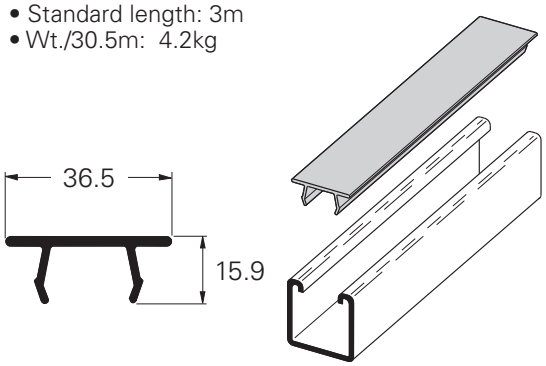

B825 Series
Plastic End Caps

- Material: Polyurethane
- Available in colors: Gray (GRY)

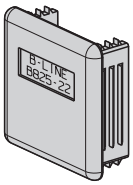

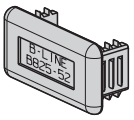

Part No.	Fits Channel Sizes	Wt./C kg
B825-22	B22	0.9
B825-52	B52	0.4

All dimensions are in millimeters unless otherwise specified.

HHCS
Hex Head Cap Screws
- Standard finish: HDG, Stainless Steel Type 316

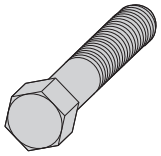

Part No.	Wt./C kg
M6x20 HHCS	0.63
M6x25 HHCS	0.77
M8x20 HHCS	1.04
M8x25 HHCS	1.27
M10x25 HHCS	1.90
M12x20 HHCS	3.48
M12x25 HHCS	3.81
M12x30 HHCS	4.17

HN
Hex Nuts
- Standard finish: HDG, Stainless Steel Type 316

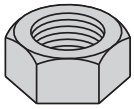

Part No.	Wt./C kg
M6 HN	0.32
M8 HN	0.45
M10 HN	0.68
M12 HN	1.63

FW
FLAT WASHERS
- Standard finish: HDG, Stainless Steel Type 316

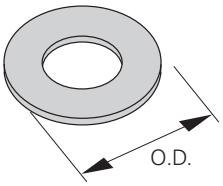

Part No.	O.D. Outside Dia. mm	Wt./C kg
FW M6	18.7	0.32
FW M8	22.2	0.63
FW M10	25.4	0.77
FW M12	34.9	1.77

ATR
All Threaded Rod
- Available in 3000mm lengths
- Safety Factor of 5 on recommended load
- Standard finish: HDG, Stainless Steel Type 316

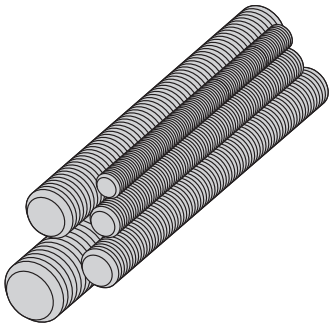

Part No. & Size	Threads Size	Recommended Load kN	Wt./30.5m kg
ATR M6	M6	1.32	6.1
ATR M8	M8	2.42	10.7
ATR M10	M10	3.66	15.3
ATR M12	M12	5.35	24.4

All dimensions are in millimeters unless otherwise specified.

A selection of fittings and accessories are available to complete B-Line bolted strut system.

Dimensions

The following dimensions apply to all fittings except as noted.

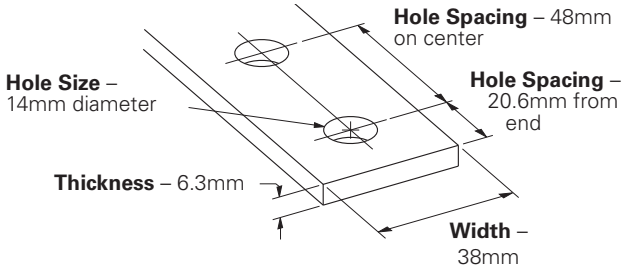

Materials & Finishes (Unless otherwise noted)

Finish Code	Finish	Specification
PLN	Plain	AS/NZS 1594 / ASTM A1018
HDG	Hot-Dipped Galvanized	AS/NZS 4680 / ASTM A123
SS6	Stainless Steel	Type 316

Note: A minimum order may apply on special material and finishes.

Load Data

The load data published includes safety factor of 2.5 when used with 2.6mm channel (safety factor = ratio of ultimate load to the design load).

Use M12 x 20 hex head cap screws and BMS-12 channel nuts for the rated results.

Recommended Bolt Torque

Bolt Size	M6	M8	M10	M12
Nm	12	17	36	62

Hardware

Nuts and bolts are not included with the fittings and must be ordered separately, unless noted.

Metric

All dimensions are in millimeters unless noted otherwise.

B200 Series Square Washer

- Standard finishes: HDG, SS6

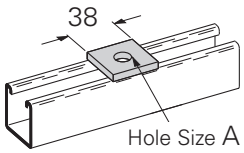

B200-D Series No-Twist Square Washer

- Standard finishes: HDG, SS6

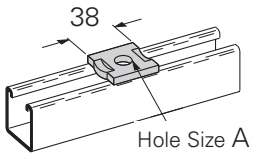

Part No.	A	Bolt Size	Wt./C kg
B201	11.1	M10	7.7
B202	14.2	M12	7.7
B201-D	11.1	M10	7.7
B202-D	14.2	M12	7.7

B129 Two-Hole Splice Plate

- Standard finishes: HDG, SS6
- Wt./C: 16.8kg

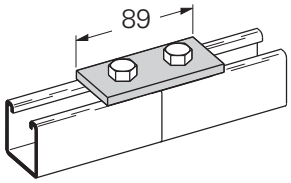

B140 Three-Hole Corner Plate

- Standard finishes: HDG, SS6
- Wt./C: 25.4kg

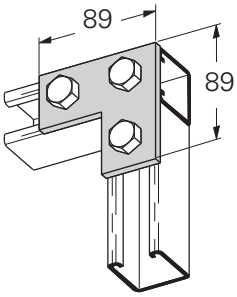

B141 Three-Hole Splice Plate

- Standard finishes: HDG, SS6
- Wt./C: 24.9kg

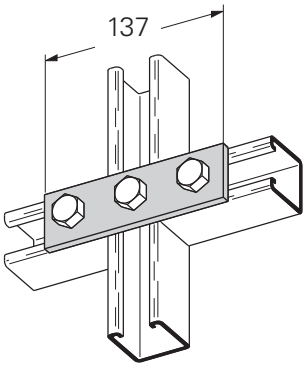

B341 Four-Hole Splice Plate

- Standard finishes: HDG, SS6
- Wt./C: 34.5kg

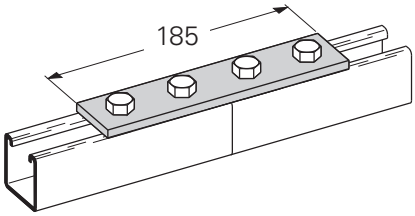

B133 Four-Hole Tee Plate

- Standard finishes: HDG, SS6
- Wt./C: 34.0kg

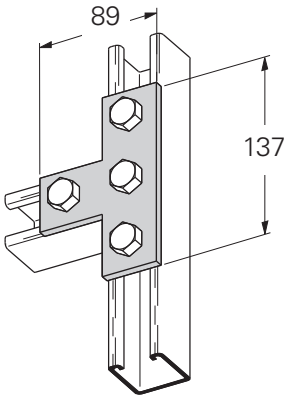

B143 Four-Hole Corner Angle

- Standard finishes: HDG, SS6
- Wt./C: 34.0kg

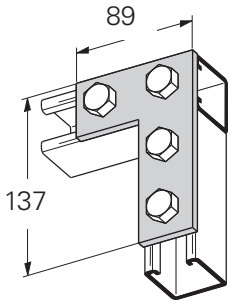

B101 Two-Hole Corner Angle

- Standard finishes: HDG, SS6
- Wt./C: 16.8kg

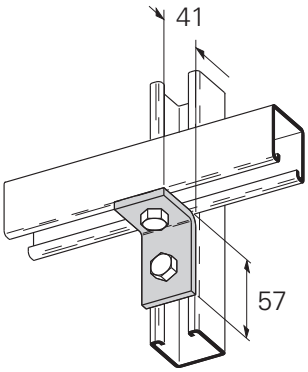

All dimensions are in millimeters unless otherwise specified.

B230
Two-Hole Corner Angle
- Standard finishes: HDG, SS6
- Wt./C: 16.8kg

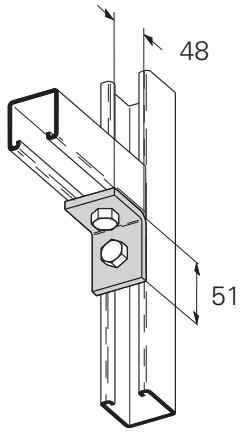

B102
Three-Hole Corner Angle
- Standard finishes: HDG, SS6
- Wt./C: 25.4kg

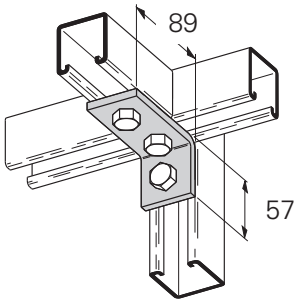

B103
Three-Hole Corner Angle
- Standard finishes: HDG, SS6
- Wt./C: 25.4kg

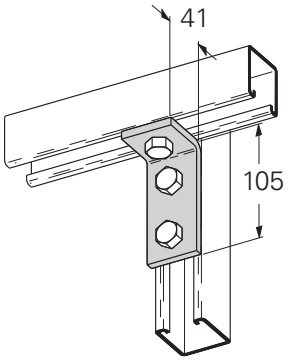

B104
Four-Hole Corner Angle
- Standard finishes: HDG, SS6
- Wt./C: 35.4kg

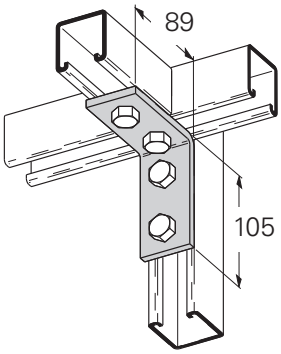

B409
Single Channel Bracket
- Safety Factor of 2.5
- Standard finishes: HDG, SS6

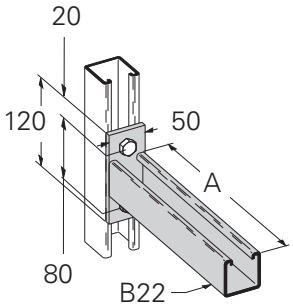

Part No.	A	Uniform Load kN	Wt./C kg
B409-300	300	4.27	105.2
B409-600	600	2.13	204.1

B107
Five Hole U-Support
- Standard finishes: HDG, SS6
- Wt./C: 38.5kg

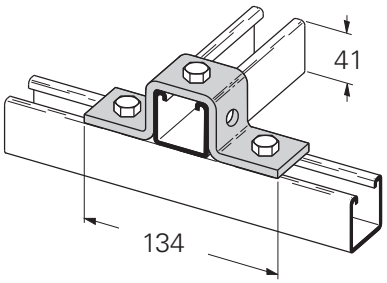

B297
Double Channel Bracket
- Safety Factor of 2.5
- Standard finishes: HDG, SS6

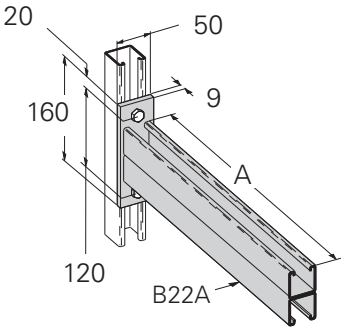

Part No.	A	Uniform Load kN	Wt./C kg
B297-750	750	2.95	471.7
B297-1000	1000	2.06	653.2

All dimensions are in millimeters unless otherwise specified.

B279FL
Post Base For B22
- Standard finishes: HDG, SS6
- Wt./C: 104.3kg

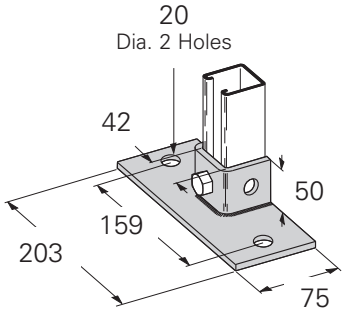

B281AFL
Post Base For B22A
- Standard finishes: HDG, SS6
- Wt./C: 113.4kg

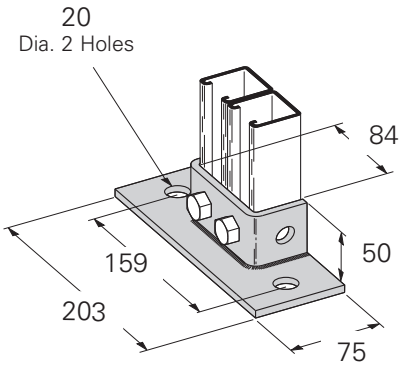

B441-22
Beam Clamp (Sold in Pieces)
- Design Load 5.34kN when used in pairs
- Safety Factor of 5
- 19.0mm Max. Flange Thickness
- For use with 20.6mm to 41.3mm high channel
- Recommended Torque: 16.9N•m
- Other flange thickness variations are available, contact B-Line Engineering for sizes
- Standard finishes: HDG, SS6
- Wt./C: 39.4kg

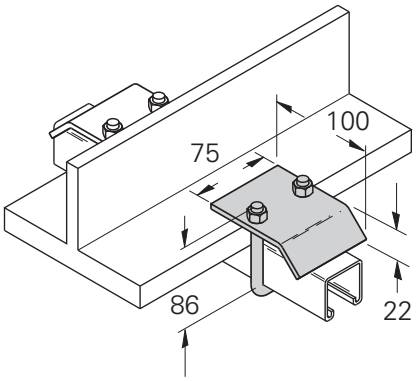

B441-22A
Beam Clamp (Sold in Pieces)
- Design Load 5.34kN when used in pairs
- Safety Factor of 5
- 19.0mm Max. Flange Thickness
- For use with 41.3mm to 82.5mm high channel
- Recommended Torque: 16.9N•m
- Other flange thickness variations are available, contact B-Line Engineering for sizes
- Standard finishes: HDG, SS6
- Wt./C: 42.2kg

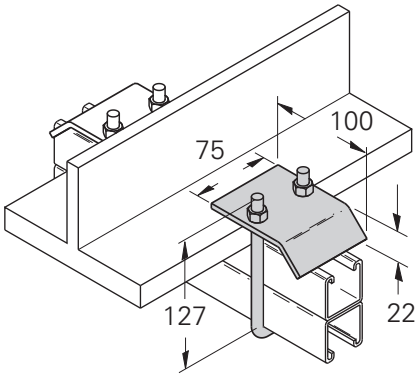

All dimensions are in millimeters unless otherwise specified.

Cable Tray & Ladder Straight Sections

Prefix
Example: RWI 04 A 09 SL - 12 - 120
① ② ③ ④ ⑤ ⑥ ⑦

① Tray Series
② Height
③ Material
④ Rung Spacing
⑤ Straight Ladder
⑥ Width
⑦ Length

Catalog No.	Page
Aluminum NEMA 12B Cable Ladder	
RWI 04 A ④ SL - ⑥ - ⑦	AL-3
RWI 05 A ④ SL - ⑥ - ⑦	AL-3
RWI 06 A ④ SL - ⑥ - ⑦	AL-3
RWI 07 A ④ SL - ⑥ - ⑦	AL-3

Material
A = Aluminum

Prefix
Example: 24 A 09 - 24 - 144
① ② ③ ④ ⑤

① Tray Series
② Material
③ Rung Spacing
④ Width
⑤ Length

Catalog No.	Page
Aluminum Series 2, 3, 4, & 5 Cable Ladder	
24 A ③ - ④ - ⑤	AL-25 & AL-26
25 A ③ - ④ - ⑤	AL-27 & AL-28
26 A ③ - ④ - ⑤	AL-29 & AL-20
34 A ③ - ④ - ⑤	AL-25 & AL-26
35 A ③ - ④ - ⑤	AL-27 & AL-28
36 A ③ - ④ - ⑤	AL-29 & AL-30
37 A ③ - ④ - ⑤	AL-31 & AL-32
46 A ③ - ④ - ⑤	AL-29 & AL-30
47 A ③ - ④ - ⑤	AL-31 & AL-32
57 A ③ - ④ - ⑤	AL-31 & AL-32
H46 A ③ - ④ - ⑤	AL-29 & AL-30
H47 A ③ - ④ - ⑤	AL-31 & AL-32

Materials
A = Aluminum

Prefix
Example: P 050 V B * 15 SS - 200 - 3000
① ② ③ ④ ⑤ ⑥ ⑦ ⑧ ⑨

① Tray Type
② Height
③ Bottom Type
④ Return Flange Type
⑤ Material
⑥ Thickness
⑦ Straight Section
⑧ Width
⑨ Length

Catalog No.	Page
Perforated & Solid Cable Tray	
P025 ③ B ⑤ ⑥ SS - ⑧ - ⑨	PS-4
P050 ③ B ⑤ ⑥ SS - ⑧ - ⑨	PS-5
P075 ③ B ⑤ ⑥ SS - ⑧ - ⑨	PS-6
P100 ③ B ⑤ ⑥ SS - ⑧ - ⑨	PS-7

Materials
G = Hot Dipped Galvanized Steel
P = Pre-Galvanized Steel
SS6 = 316 Stainless Steel
A = Aluminum

Prefix
Example: 148 P 09 SL - 24 - 144
① ② ③ ④ ⑤ ⑥

① Tray Series
② Material
③ Rung Spacing
④ Rung Type
⑤ Width
⑥ Length

Catalog No.	Page
Steel Cable Ladder Series 1	
148 ② ③ ④ - ⑤ - ⑥	LDS-3 & LDS-4
156 ② ③ ④ - ⑤ - ⑥	LDS-3 & LDS-4
168 ② ③ ④ - ⑤ - ⑥	LDS-3 & LDS-4
176 ② ③ ④ - ⑤ - ⑥	LDS-3 & LDS-4

Materials
G = Hot Dipped Galvanized Steel
P = Pre-Galvanized Steel

Cable Tray & Ladder Straight Sections

Prefix

Example: **125 X 200 C D 12I LL - 0600 - 3000**

① ② ③ ④ ⑤ ⑥ ⑦ ⑧ ⑨

① Height
② Material
③ Rung Spacing
④ Rung Shape
⑤ Rung Orientation
⑥ Side Rail Series
⑦ Straight Section
⑧ Width
⑨ Length

Catalog No.	Page

Slotted Steel Cable Ladder

125 G ③ C D 15I LL - ⑧ - ⑨	CL-4
125 G ③ C D 20I LL - ⑧ - ⑨	CL-4
125 X ③ C D 12I LL - ⑧ - ⑨	CL-3
125 X ③ C D 15I LL - ⑧ - ⑨	CL-4
125 X ③ C D 20I LL - ⑧ - ⑨	CL-4
150 G ③ C D 15I LL - ⑧ - ⑨	CL-4
150 G ③ C D 20I LL - ⑧ - ⑨	CL-4
150 X ③ C D 12I LL - ⑧ - ⑨	CL-3
150 X ③ C D 15I LL - ⑧ - ⑨	CL-4
150 X ③ C D 20I LL - ⑧ - ⑨	CL-4

Materials
G = Hot Dipped Galvanized Steel
X = 316 Stainless Steel

Prefix

Example: **P 050 V C F SS - 150 - 3000**

① ② ③ ④ ⑤ ⑥ ⑦ ⑧

① Cable Tray
② Height
③ Bottom Type
④ Flange Type
⑤ Material
⑥ Straight Section
⑦ Width
⑧ Length

Catalog No.	Page

Fiberglass Cable Tray

P 050 ③ C ⑤ SS - ⑦ - 3000	GRP-3
P 100 ③ C ⑤ SS - ⑦ - 3000	GRP-4

Materials
F = Polyester Resin
FD = Polyester Resin w/ Carbon Surface Veil
FZ = Zero Halogen Resin
FD = Zero Halogen Resin w/ Carbon Surface Veil

Prefix

Example: **100 F 225 N D 02C LL - 300 - 3000**

① ② ③ ④ ⑤ ⑥ ⑦ ⑧ ⑨

① Height
② Material
③ Rung Spacing
④ Rung Shape
⑤ Rung Orientation
⑥ Tray Series
⑦ Straight Section
⑧ Width
⑨ Length

Catalog No.	Page

Fiberglass Cable Ladder

075 ② ③ ④ D 02C LL - ⑧ - ⑨	GRP-23
100 ② ③ ④ D 02C LL - ⑧ - ⑨	GRP-23
150 ② ③ ④ D 03C LL - ⑧ - ⑨	GRP-24
150 ② ③ ④ D 04C LL - ⑧ - ⑨	GRP-25
150 ② ③ ④ D 05C LL - ⑧ - ⑨	GRP-26

Materials
F = Polyester Resin
FD = Polyester Resin w/ Carbon Surface Veil
FZ = Zero Halogen Resin
FD = Zero Halogen Resin w/ Carbon Surface Veil

Cable Tray & Ladder Covers

Prefix
Example: 86 7 A 40 SL - 12 - 120
① ② ③ ④ ⑤ ⑥ ⑦

① Cover Type
② Detail
③ Material
④ Material Thickness
⑤ Straight Section
⑥ Width
⑦ Length

Catalog No.	Page
NEMA 12B Aluminum Cable Ladder Straight Section Covers	
86 7 A 40 SL - ⑥ - ⑦	AL-7
87 7 A 40 SL - ⑥ - ⑦	AL-7
Material A = Aluminum	

Prefix
Example: 86 7 A 40 V(I or O) - 24 - 90 R24 - 4
① ② ③ ④ ⑤ ⑥ ⑦ ⑧ ⑨

① Cover Type
② Detail
③ Material
④ Material thickness
⑤ Fitting Type
⑥ Width
⑦ Angle
⑧ Radius
⑨ Side Rail Height (VO)

Catalog No.	Page
NEMA 12B Aluminum Cable Ladder Vertical Bend (VI or VO) Covers	
86 7 A 40 VI - ⑥ - ⑦ ⑧	AL-8
87 7 A 40 VI - ⑥ - ⑦ ⑧	AL-8
86 7 A 40 VO - ⑥ - ⑦ ⑧ - ⑨	AL-8
87 7 A 40 VO - ⑥ - ⑦ ⑧ - ⑨	AL-8
Materials A = Aluminum	

Prefix
Example: 86 7 A 40 HB - 18 - 90 R24 - 4
① ② ③ ④ ⑤ ⑥ ⑦ ⑧ ⑨

① Cover Type
② Detail
③ Material
④ Material thickness
⑤ Fitting Type
⑥ Width
⑦ Angle
⑧ Radius
⑨ Side Rail Height (VTD)

Catalog No.	Page
NEMA 12B Aluminum Cable Ladder Standard Fitting Covers	
867 A 40 HB - ⑥ - ⑦ ⑧	AL-8
877 A 40 HB - ⑥ - ⑧	AL-8
867 A 40 HT - ⑥ - ⑧	AL-8
877 A 40 HT - ⑥ - ⑧	AL-8
867 A 40 HX - ⑥ - ⑧	AL-8
877 A 40 HX - ⑥ - ⑧	AL-8
867 A 40 VTD - ⑥ - ⑧ - ⑨	AL-8
877 A 40 VTD - ⑥ - ⑧ - ⑨	AL-8
867 A 40 VTU - ⑥ - ⑧	AL-8
877 A 40 VTU - ⑥ - ⑧	AL-8
Materials A = Aluminum	

Prefix
Example: 86 7 A 40 RX - 12 - 24 R24
① ② ③ ④ ⑤ ⑥ ⑦ ⑧

① Cover Type
② Detail
③ Material
④ Material thickness
⑤ Fitting Type
⑥ Width 1
⑦ Width 2
⑧ Radius

Catalog No.	Page
NEMA 12B Aluminum Cable Ladder Expanding/Reducing Covers	
867 A 40 ET - ⑥ - ⑦ ⑧ (Expanding Tee)	AL-8
877 A 40 ET - ⑥ - ⑦ ⑧ (Expanding Tee)	AL-8
867 A 40 RT - ⑥ - ⑦ ⑧ (Reducing Tee)	AL-8
877 A 40 RT - ⑥ - ⑦ ⑧ (Reducing Tee)	AL-8
867 A 40 RX - ⑥ - ⑦ ⑧ (Exp./Red. Cross)	AL-8
877 A 40 RX - ⑥ - ⑦ ⑧ (Exp./Red. Cross)	AL-8
Materials A = Aluminum	

Cable Tray & Ladder Covers

Prefix
Example: **80 7 A 40 - 24 - 144**
① ② ③ ④ ⑤ ⑥

① Cover Type
② Detail
③ Material
④ Material Thickness
⑤ Width
⑥ Length

Catalog No.	Page
Series 2, 3, 4, 5 Aluminum Cable Ladder Straight Section Covers	
80 6 A 40 - ⑤ - ⑥	AL-45
80 7 A 40 - ⑤ - ⑥	AL-45
81 6 A 40 - ⑤ - ⑥	AL-45
81 7 A 40 - ⑤ - ⑥	AL-45
82 6 A 40 - ⑤ - ⑥	AL-45
82 7 A 40 - ⑤ - ⑥	AL-45

Material
A = Aluminum

Prefix
Example: **80 7 A 40 - 18 - LR 12**
① ② ③ ④ ⑤ ⑥ ⑦

① Cover Type
② Detail
③ Material
④ Material Thickness
⑤ Width 1
⑥ Fitting Type
⑦ Width 2

Catalog No.	Page
Series 2, 3, 4, 5 Aluminum Cable Ladder Reducer Fittings	
80 ② A 40 - ⑤ - LR ⑦	AL-45
80 ② A 40 - ⑤ - RR ⑦	AL-45
80 ② A 40 - ⑤ - SR ⑦	AL-45
81 ② A 40 - ⑤ - LR ⑦	AL-45
81 ② A 40 - ⑤ - RR ⑦	AL-45
81 ② A 40 - ⑤ - SR ⑦	AL-45
82 ② A 40 - ⑤ - LR ⑦	AL-45
82 ② A 40 - ⑤ - RR ⑦	AL-45
82 ② A 40 - ⑤ - SR ⑦	AL-45

Material
A = Aluminum

Prefix
Example: **80 7 A 40 - 24 - 90 HB 24 - 4**
① ② ③ ④ ⑤ ⑥ ⑦ ⑧ ⑨

① Cover Type
② Detail
③ Material
④ Material Thickness
⑤ Width
⑥ Angle (HB, VI, VO)
⑦ Fitting Type
⑧ Radius
⑨ Side Rail Height (VO, VT, CSF)

Catalog No.	Page
Series 2, 3, 4, 5 Aluminum Cable Ladder Fitting Covers	
80 ② A 40 - ⑤ - ⑥ HB ⑧	AL-45
81 ② A 40 - ⑤ - ⑥ HB ⑧	AL-45
82 ② A 40 - ⑤ - ⑥ HB ⑧	AL-45
80 ② A 40 - ⑤ - HT ⑧	AL-45
81 ② A 40 - ⑤ - HT ⑧	AL-45
82 ② A 40 - ⑤ - HT ⑧	AL-45
80 ② A 40 - ⑤ - HX ⑧	AL-45
81 ② A 40 - ⑤ - HX ⑧	AL-45
82 ② A 40 - ⑤ - HX ⑧	AL-45
80 ② A 40 - ⑤ - ⑥ VI ⑧	AL-45
81 ② A 40 - ⑤ - ⑥ VI ⑧	AL-45
82 ② A 40 - ⑤ - ⑥ VI ⑧	AL-45
80 ② A 40 - ⑤ - ⑥ VO ⑧ - ⑨	AL-45
81 ② A 40 - ⑤ - ⑥ VO ⑧ - ⑨	AL-45
82 ② A 40 - ⑤ - ⑥ VO ⑧ - ⑨	AL-45
80 ② A 40 - ⑤ - VT ⑧ - ⑨	AL-45
81 ② A 40 - ⑤ - VT ⑧ - ⑨	AL-45
82 ② A 40 - ⑤ - VT ⑧ - ⑨	AL-45
80 ② A 40 - ⑤ - VTU ⑧	AL-45
81 ② A 40 - ⑤ - VTU ⑧	AL-45
82 ② A 40 - ⑤ - VTU ⑧	AL-45
80 ② A 40 - ⑤ - HYL	AL-45
81 ② A 40 - ⑤ - HYL	AL-45
82 ② A 40 - ⑤ - HYL	AL-45
80 ② A 40 - ⑤ - HYR	AL-45
81 ② A 40 - ⑤ - HYR	AL-45
82 ② A 40 - ⑤ - HYR	AL-45
80 ② A 40 - ⑤ - CSF ⑧ - ⑨	AL-45
81 ② A 40 - ⑤ - CSF ⑧ - ⑨	AL-45
82 ② A 40 - ⑤ - CSF ⑧ - ⑨	AL-45

Material
A = Aluminum

Cable Tray & Ladder Covers

Prefix
Example: **PCF S C * SS - 300 - 3000**
① ② ③ ④ ⑤ ⑥ ⑦

① Cover Type
② Top Style
③ Frange Style
④ Material & Thickness
⑤ Straight Section
⑥ Width
⑦ Length

Catalog No.	Page

Perforated & Solid Cable Tray Straight Section Covers

PCF L B ④ SS - ⑥ - ⑦	PS-23
PCF L C ④ SS - ⑥ - ⑦	PS-23
PCF S B ④ SS - ⑥ - ⑦	PS-23
PCF S C ④ SS - ⑥ - ⑦	PS-23

* Material
P15 = Pre Galvanized, 1.5mm thick
G12 = HDGAF, 1.2mm thick
G15 = HDGAF, 1.5mm thick
SS615 = Stainless Steel 316, 1.5mm thick
A10 = Aluminum, 1.0mm thick

Prefix
Example: **PCF S * HB - 500 - 60 R600 - 050**
① ② ③ ④ ⑤ ⑥ ⑦ ⑧

① Cover Type
② Top Style
③ Material
④ Fitting Type
⑤ Width
⑥ Angle (HB, VI, VO)
⑦ Radius
⑧ Tray Height (VO)

Catalog No.	Page

Perforated & Solid Cable Tray Fitting Covers

PCF ② ③ HB - ⑤ - ⑥ ⑦	PS-23
PCF ② ③ HT - ⑤ - ⑦	PS-23
PCF ② ③ HX - ⑤ - ⑦	PS-23
PCF ② ③ VI - ⑤ - ⑥ ⑦	PS-23
PCF ② ③ VO - ⑤ - ⑥ ⑦ - ⑧	PS-23

* Material
P15 = Pre Galvanized, 1.5mm thick
G12 = HDGAF, 1.2mm thick
G15 = HDGAF, 1.5mm thick
SS615 = Stainless Steel 316, 1.5mm thick
A10 = Aluminum, 1.0mm thick

Prefix
Example: **PCF S * RR - 300 - 150**
① ② ③ ④ ⑤ ⑥

① Cover Type
② Top Style
③ Material
④ Fitting Type
⑤ Width 1
⑥ Width 2

Catalog No.	Page

Perforated & Solid Cable Tray Reducer Covers

PCF ② ③ LR - ⑤ - ⑥	PS-23
PCF ② ③ RR - ⑤ - ⑥	PS-23
PCF ② ③ SR - ⑤ - ⑥	PS-23

Materials
P15 = Pre Galvanized, 1.5mm thick
G12 = HDGAF, 1.2mm thick
G15 = HDGAF, 1.5mm thick
SS615 = Stainless Steel 316, 1.5mm thick
A10 = Aluminum, 1.0mm thick

Cable Tray & Ladder Covers

Prefix
Example: 80 1 P - 20 - 24 - 144
① ② ③ ④ ⑤ ⑥

① Cover Type
② Detail
③ Material
④ Thickness
⑤ Width
⑥ Length

Catalog No.	Page
Steel Cable Ladder Series 1 Straight Section Covers	
801 ③ - ④ - ⑤ - ⑥	LDS-9
811 ③ - ④ - ⑤ - ⑥	LDS-9

Material
P = Pre Galvanized
G = HDGAF

Prefix
Example: 80 1 P 20 - 24 - LR - 12
① ② ③ ④ ⑤ ⑥ ⑦

① Cover Type
② Detail
③ Material
④ Thickness
⑤ Width 1
⑥ Fitting Type
⑦ Width 2

Catalog No.	Page
Steel Cable Ladder Series 1 Fitting Covers	
801 ③ ④ - ⑤ - LR - ⑥	LDS-10
811 ③ ④ - ⑤ - LR - ⑥	LDS-10
801 ③ ④ - ⑤ - RR - ⑥	LDS-10
811 ③ ④ - ⑤ - RR - ⑥	LDS-10
801 ③ ④ - ⑤ - SR - ⑥	LDS-10
811 ③ ④ - ⑤ - SR - ⑥	LDS-10

Material
P = Pre Galvanized
G = HDGAF

Prefix
Example: 80 1 P - 20 - 24 - 90 HB 24 - 4
① ② ③ ④ ⑤ ⑥ ⑦ ⑧ ⑨

① Cover Type
② Detail
③ Material
④ Thickness
⑤ Width
⑥ Angle (HB, VI, VO)
⑦ Fitting Type
⑧ Radius
⑨ Side Rail Height (VO)

Catalog No.	Page
Steel Cable Ladder Series 1 Fitting Covers	
801 ③ ④ - ⑤ - ⑥ HB - ⑧	LDS-10
811 ③ ④ - ⑤ - ⑥ HB - ⑧	LDS-10
801 ③ ④ - ⑤ - HT - ⑧	LDS-10
811 ③ ④ - ⑤ - HT - ⑧	LDS-10
801 ③ ④ - ⑤ - HX - ⑧	LDS-10
811 ③ ④ - ⑤ - HX - ⑧	LDS-10
801 ③ ④ - ⑤ - ⑥ VI - ⑧	LDS-10
811 ③ ④ - ⑤ - ⑥ VI - ⑧	LDS-10
801 ③ ④ - ⑤ - ⑥ VO - ⑧ - ⑨	LDS-10
811 ③ ④ - ⑤ - ⑥ VO - ⑧ - ⑨	LDS-10

Material
P = Pre Galvanized
G = HDGAF

Cable Tray & Ladder Covers

Prefix
Example: **CIF S G15 LL - 0600 - 3000**
① ② ③ ④ ⑤ ⑥

① Flanged Cover
② Cover Type
③ Material
④ Straight Section
⑤ Width
⑥ Length

Catalog No.	Page

Slotted Steel Cable Ladder Straight Section Covers

CIF L ③ LL - ⑤ - ⑥ CL-26
CIF P ③ LL - ⑤ - ⑥ CL-26
CIF S ③ LL - ⑤ - ⑥ CL-26

Material
P = Pre Galvanized
G = HDGAF

Prefix
Example: **CCF S X10 LRR - 0600 - 300 - R0300**
① ② ③ ④ ⑤ ⑥ ⑦

① Flanged Cover
② Cover Type
③ Material
④ Fitting Type
⑤ Width 1
⑥ Width 2
⑦ Radius

Catalog No.	Page

Slotted Steel Cable Ladder Expanding/Reducing Fitting Covers

CCF ② ③ LLR - ⑤ - ⑥ CL-27
CCF ② ③ LRR - ⑤ - ⑥ CL-27
CCF ② ③ LSR - ⑤ - ⑥ CL-27
CCF ② ③ LET - ⑤ - ⑥ ⑦ (Expanding Tee) CL-27
CCF ② ③ LRT - ⑤ - ⑥ ⑦ (Reducing Tee) CL-27
CCF ② ③ LRX - ⑤ - ⑥ ⑦ (Exp./Red. Cross) CL-27

Material
P = Pre Galvanized
G = HDGAF

Prefix
Example: **CCF S G15 LVO - 0600 - 90 R0600 - 150**
① ② ③ ④ ⑤ ⑥ ⑦ ⑧

① Cover Type
② Detail
③ Material & Thickness
④ Fitting Type
⑤ Width
⑥ Angle (HB, VI, VO)
⑦ Radius
⑧ Side Rail Height (VO)

Catalog No.	Page

Slotted Steel Cable Ladder Fitting Covers

CCF ② ③ LHB - ⑤ - ⑥ ⑦ CL-27
CCF ② ③ LVI - ⑤ - ⑥ ⑦ CL-27
CCF ② ③ LVO - ⑤ - ⑥ ⑦ - ⑧ CL-27
CCF ② ③ LHT - ⑤ - ⑦ CL-27
CCF ② ③ LHX - ⑤ - ⑦ CL-27
CCF ② ③ LVTD - ⑤ - ⑦ - ⑧ CL-27
CCF ② ③ LVTU - ⑤ - ⑦ CL-27
CCF ② ③ LCSF - ⑤ - ⑦ - ⑧ CL-27

Material
P = Pre Galvanized
G = HDGAF

Cable Tray & Ladder Covers

Prefix
Example: **PCF S F SS - 150 - 3000**
① ② ③ ④ ⑤ ⑥

① Tray Type
② Top Style
③ Material
④ Straight Section
⑤ Width
⑥ Length

Catalog No.	Page

Fiberglass Cable Tray Straight Section Covers

PCF S ③ SS - ⑤ - 3000 ..... GRP-19

Materials
F = Polyester Resin
FD = Polyester Resin w/ Carbon Surface Veil
FZ = Zero Halogen Resin
FD = Zero Halogen Resin w/ Carbon Surface Veil

Prefix
Example: **PCF S F - 300 - LR - 150**
① ② ③ ④ ⑤ ⑥

① Tray Type
② Top Style
③ Material
④ Width 1
⑤ Fitting Type
⑥ Width 2

Catalog No.	Page

Fiberglass Cable Tray Expanding/Reducing Fitting Covers

PCF S ③ - ④ - LR - ⑥ GRP-20
PCF S ③ - ④ - RR - ⑥ GRP-20
PCF S ③ - ④ - SR - ⑥ GRP-20

Materials
F = Polyester Resin
FD = Polyester Resin w/ Carbon Surface Veil
FZ = Zero Halogen Resin
FD = Zero Halogen Resin w/ Carbon Surface Veil

Prefix
Example: **PCF S F HB - 150 - 90 R0600 - 050**
① ② ③ ④ ⑤ ⑥ ⑦ ⑧

① Tray Type
② Top Style
③ Material
④ Fitting Type
⑤ Width
⑥ Angle (HB, VI, VO)
⑦ Radius
⑧ Side Rail Height (VO)

Catalog No.	Page

Fiberglass Cable Tray Fitting Covers

PCF S ③ HB - ⑤ - ⑥ - ⑦ GRP-20
PCF S ③ HT - ⑤ - ⑦ GRP-20
PCF S ③ HX - ⑤ - ⑦ GRP-20
PCF S ③ VI - ⑤ - ⑥ - ⑦ GRP-20
PCF S ③ VO - ⑤ - ⑥ - ⑦ - ⑧ GRP-20

Materials
F = Polyester Resin
FD = Polyester Resin w/ Carbon Surface Veil
FZ = Zero Halogen Resin
FD = Zero Halogen Resin w/ Carbon Surface Veil

Cable Tray & Ladder Covers

Prefix
Example: CIF S F SS - 150 - 3000
① ② ③ ④ ⑤ ⑥

① Tray Type
② Top Style
③ Material
④ Straight Section
⑤ Width
⑥ Length

Catalog No.	Page

Fiberglass Cable Ladder Straight Section Covers

CIF S ③ SS - ⑤ - 3000 ..... GRP-42

Materials
F = Polyester Resin
FD = Polyester Resin w/ Carbon Surface Veil
FZ = Zero Halogen Resin
FD = Zero Halogen Resin w/ Carbon Surface Veil

Prefix
Example: CCF S F - 300 - LR - 100
① ② ③ ④ ⑤ ⑥

① Tray Type
② Top Style
③ Material
④ Width 1
⑤ Fitting Type
⑥ Width 2

Catalog No.	Page

Fiberglass Cable Ladder Expanding/Reducing Fitting Covers

CCF S ③ - ④ - LR ⑥ GRP-42
CCF S ③ - ④ - RR ⑥ GRP-42
CCF S ③ - ④ - SR ⑥ GRP-42

Materials
F = Polyester Resin
FD = Polyester Resin w/ Carbon Surface Veil
FZ = Zero Halogen Resin
FD = Zero Halogen Resin w/ Carbon Surface Veil

Prefix
Example: CCF S F HB - 150 - 90 R0600 - 075
① ② ③ ④ ⑤ ⑥ ⑦ ⑧

① Tray Type
② Top Style
③ Material
④ Fitting Type
⑤ Width
⑥ Angle (HB, VI, VO)
⑦ Radius
⑧ Side Rail Height (VO)

Catalog No.	Page

Fiberglass Cable Ladder Fitting Covers

CCF S ③ HB - ⑤ - ⑥ - ⑦ GRP-42
CCF S ③ HT - ⑤ - ⑦ GRP-42
CCF S ③ HX - ⑤ - ⑦ GRP-42
CCF S ③ VI - ⑤ - ⑥ - ⑦ GRP-42
CCF S ③ VO - ⑤ - ⑥ - ⑦ - ⑧ GRP-42

Materials
F = Polyester Resin
FD = Polyester Resin w/ Carbon Surface Veil
FZ = Zero Halogen Resin
FD = Zero Halogen Resin w/ Carbon Surface Veil

Cable Tray & Ladder Fittings

Prefix
Example: **RWI 04 A09 HB - 09 - 30 R24**
① ② ③ ④ ⑤ ⑥

① Tray Height
② Material & Rung Spacing
③ Fitting Type
④ Width
⑤ Angle (HB, VI, VO)
⑥ Radius

Catalog No.	Page
Aluminum NEMA 12B Cable Ladder Fittings Except Reducer Fittings	
RWI ① A09 HB - ④ - ⑤ - ⑥	AL-11 & AL-12
RWI ① A09 HT - ④ - ⑥	AL-13
RWI ① A09 HX - ④ - ⑥	AL-13
RWI ① A09 VI - ④ - ⑤ - ⑥	AL-14 – AL-17
RWI ① A09 VO - ④ - ⑤ - ⑥	AL-14 – AL-17
RWI ① A09 VTD - ④ - ⑥	AL-18
RWI ① A09 VTU - ④ - ⑥	AL-18
Material A = Aluminum	

Prefix
Example: **RWI 04 A09 ET - 09 - 30 R24**
① ② ③ ④ ⑤ ⑥

① Tray Height
② Material & Rung Spacing
③ Fitting Type
④ Width
⑤ Angle (HB, VI, VO)
⑥ Radius

Catalog No.	Page
Aluminum NEMA 12B Cable Ladder Reducer Fittings	
RWI ① A09 ET - ④ - ⑤ - ⑥	AL-19
RWI ① A09 RT - ④ - ⑤ - ⑥	AL-20
RWI ① A09 RX - ④ - ⑤ - ⑥	AL-21
Material A = Aluminum	

Prefix
Example: **4 A - 24 - 90 HB 24**
① ② ③ ④ ⑤ ⑥

① Tray Height
② Material
③ Width
④ Angle (HB, VI, VO)
⑤ Fitting Type
⑥ Radius

Catalog No.	Page
Series 2, 3, 4, 5 Aluminum Cable Ladder Fittings Except Reducer/Expander Fittings	
① A - ③ - ④ HB ⑥	AL-50 & AL-51
① A - ③ HT ⑥	AL-52
① A - ③ HX ⑥	AL-52
① A - ③ - ④ VI ⑥	AL-53 – AL-56
① A - ③ - ④ VO ⑥	AL-53 – AL-56
① A - ③ VT 24 ⑥	AL-57
① A - ③ VTU 24 ⑥	AL-57
① A - ③ HYL 24 (24" radius only)	AL-58
① A - ③ HYR 24 (24" radius only)	AL-58
① A - ③ CSF ⑥	AL-59
Material A = Aluminum	

Prefix
Example: **4 A - 24 - RR - 18**
① ② ③ ④ ⑤

① Tray Height
② Material
③ Width 1
④ Fitting
⑤ Width 2

Catalog No.	Page
Aluminum NEMA 12B Cable Ladder Reducer Fittings	
① A - ③ - LR - ⑤	AL-61
① A - ③ - RR - ⑤	AL-61
① A - ③ - SR - ⑤	AL-61
Material A = Aluminum	

Cable Tray & Ladder Fittings

Prefix
Example: **4 A - 36 - 18 HT 24**
① ② ③ ④ ⑤ ⑥

① Tray Height
② Material
③ Width 1
④ Width 2
⑤ Fitting
⑥ Radius

Catalog No.	Page
Series 2, 3, 4, 5 Aluminum Cable Ladder Tee & Cross Reducer/Expanding Fittings	
① A - ③ - ④ HT ⑥ (Reducing)	AL-62
① A - ③ - ④ HT ⑥ (Expanding)	AL-63
① A - ③ - ④ HX ⑥ (Expanding/Reducing)	AL-64

Material
A = Aluminum

Prefix
Example: **PF 050 V N * 15 HB - 200 - 60 R600**
① ② ③ ④ ⑤ ⑥ ⑦ ⑧ ⑨

① Tray Height
② Bottom Type
③ No Flange
④ Material
⑤ Thickness
⑥ Fitting Type
⑦ Width
⑧ Angle (HB, VI, VO)
⑨ Radius

Catalog No.	Page
Perforated & Solid Cable Tray Fittings All Fttings Except Reducers	
PF ① ② ③ ④ ⑤ HB - ⑦ - ⑧ ⑨	PS-12 – PS-15
PF ① ② ③ ④ ⑤ HT - ⑦ - ⑨	PS-16
PF ① ② ③ ④ ⑤ HX - ⑦ - ⑨	PS-17
PF ① ② ③ ④ ⑤ VI - ⑦ - ⑧ ⑨	PS-19 – PS-22
PF ① ② ③ ④ ⑤ VO - ⑦ - ⑧ ⑨	PS-19 – PS-22

* Materials
G = Hot Dipped Galvanized Steel
P = Pre-Galvanized Steel
SS6 = 316 Stainless Steel
A = Aluminum

Prefix
Example: **PF 050 V N * 15 LR - 300 - 150**
① ② ③ ④ ⑤ ⑥ ⑦ ⑧

① Tray Height
② Bottom Type
③ No Flange
④ Material
⑤ Thickness
⑥ Fitting Type
⑦ Width 1
⑧ Width 2

Catalog No.	Page
Perforated & Solid Cable Tray Fittings Reducer Fttings	
PF ① ② ③ ④ ⑤ LR - ⑦ - ⑧	PS-18
PF ① ② ③ ④ ⑤ RR - ⑦ - ⑧	PS-18
PF ① ② ③ ④ ⑤ SR - ⑦ - ⑧	PS-18

* Materials
G = Hot Dipped Galvanized Steel
P = Pre-Galvanized Steel
SS6 = 316 Stainless Steel
A = Aluminum

Cable Tray & Ladder Fittings

Prefix

Example: 1 4 * SL - 24 - 90 HB 24

① ② ③ ④ ⑤ ⑥ ⑦ ⑧

① Series
② Height
③ Material
④ Rung Type
⑤ Width
⑥ Angle (HB, VI, VO)
⑦ Fitting Type
⑧ Radius

Catalog No.	Page

Steel Cable Ladder Series 1 Fittings Except Reducer Fittings

1 ② ③ SL - ⑤ - ⑥ HB ⑧ LDS-13
1 ② ③ SL - ⑤ HT ⑧ LDS-14
1 ② ③ SL - ⑤ HX ⑧ LDS-14
1 ② ③ SL - ⑤ - ⑥ VI ⑧ ..... LDS-16 – LDS-19
1 ② ③ SL - ⑤ - ⑥ VO ⑧ ..... LDS-16 – LDS-19

* Materials
G = Hot Dipped Galvanized Steel
P = Pre-Galvanized Steel

Prefix

Example: 1 4 * SL - 24 - RR 12

① ② ③ ④ ⑤ ⑥ ⑦

① Series
② Height
③ Material
④ Rung Type
⑤ Width 1
⑥ Fitting Type
⑦ Width 2

Catalog No.	Page

Steel Cable Ladder Series 1 Fittings Reducer Fittings

1 ② ③ SL - ⑤ - LR ⑦ LDS-15
1 ② ③ SL - ⑤ - RR ⑦ LDS-15
1 ② ③ SL - ⑤ - SR ⑦ LDS-15

* Materials
G = Hot Dipped Galvanized Steel
P = Pre-Galvanized Steel

Catalog No.	Page

Vertical Bend Segiments (VBS)

14G - Width - VBS1 ..... LDS-20
14G - Width - VBS2 ..... LDS-20
14G - Width - VBS3 ..... LDS-20
14P - Width - VBS1 ..... LDS-20
14P - Width - VBS2 ..... LDS-20
14P - Width - VBS3 ..... LDS-20

Materials
G = Hot Dipped Galvanized Steel
P = Pre-Galvanized Steel

Cable Tray & Ladder Fittings

Prefix

Example: 125 G 300 CD 20C LHB - 0600 - 90 R0600
① ② ③ ④ ⑤ ⑥ ⑦ ⑧ ⑨

① Tray Height
② Material
③ Rung Spacing
④ Rung Shape & Orientation
⑤ Side Rail
⑥ Fitting Type
⑦ Width
⑧ Angle (HB, VI, VO)
⑨ Radius

Prefix

Example: 125 G 300 CD 20C LRR - 0600 - 0300 - R0600
① ② ③ ④ ⑤ ⑥ ⑦ ⑧ ⑨

① Tray Height
② Material
③ Rung Spacing
④ Rung Shape & Orientation
⑤ Side Rail
⑥ Fitting Type
⑦ Width 1
⑧ Width 2
⑨ Radius

Slotted Steel Cable Ladder Fittings Except Reducing/Expanding Fittings

Catalog No.	Page
125 ② ③ CD ⑤ HB ⑦ - ⑧ ⑨	CL-12 – CL-13
125 ② ③ CD ⑤ HT ⑦ - ⑨	CL-18
125 ② ③ CD ⑤ HX ⑦ - ⑨	CL-18
125 ② ③ CD ⑤ LCSF ⑦ - ⑨	CL-20
125 ② ③ CD ⑤ LVTD ⑦ - ⑨	CL-19
125 ② ③ CD ⑤ LVTU ⑦ - ⑨	CL-19
125 ② ③ CD ⑤ VI ⑦ - ⑧ ⑨	CL-15 & CL-17
125 ② ③ CD ⑤ VO ⑦ - ⑧ ⑨	CL-14 & CL-16
150 ② ③ CD ⑤ HB ⑦ - ⑧ ⑨	CL-12 – CL-13
150 ② ③ CD ⑤ HT ⑦ - ⑨	CL-18
150 ② ③ CD ⑤ HX ⑦ - ⑨	CL-18
150 ② ③ CD ⑤ LCSF ⑦ - ⑨	CL-20
150 ② ③ CD ⑤ LVTD ⑦ - ⑨	CL-19
150 ② ③ CD ⑤ LVTU ⑦ - ⑨	CL-19
150 ② ③ CD ⑤ VI ⑦ - ⑧ ⑨	CL-15 & CL-17
150 ② ③ CD ⑤ VO ⑦ - ⑧ ⑨	CL-14 & CL-16

* Materials
G = Hot Dipped Galvanized Steel
SS6 = 316 Stainless Steel

Slotted Steel Cable Ladder Fittings Reducing/Expanding Fittings

Catalog No.	Page
125 ② ③ CD ⑤ LLR ⑦ - ⑧	CL-22
125 ② ③ CD ⑤ LRR ⑦ - ⑧	CL-22
125 ② ③ CD ⑤ LSR ⑦ - ⑧	CL-22
125 ② ③ CD ⑤ LET ⑦ - ⑧ ⑨	CL-23
125 ② ③ CD ⑤ LRT ⑦ - ⑧ ⑨	CL-24
125 ② ③ CD ⑤ LRX ⑦ - ⑧ ⑨	CL-25
150 ② ③ CD ⑤ LLR ⑦ - ⑧	CL-22
150 ② ③ CD ⑤ LRR ⑦ - ⑧	CL-22
150 ② ③ CD ⑤ LSR ⑦ - ⑧	CL-22
150 ② ③ CD ⑤ LET ⑦ - ⑧ ⑨	CL-23
150 ② ③ CD ⑤ LRT ⑦ - ⑧ ⑨	CL-24
150 ② ③ CD ⑤ LRX ⑦ - ⑧ ⑨	CL-25

* Materials
G = Hot Dipped Galvanized Steel
SS6 = 316 Stainless Steel

Cable Tray & Ladder Fittings

Prefix
Example: P 050 V C F HB - 150 - 90 - R600
① ② ③ ④ ⑤ ⑥ ⑦ ⑧ ⑨

① Tray Type
② Height
③ Bottom Type
④ Flange Type
⑤ Material
⑥ Fitting Type
⑦ Width
⑧ Angle (HB, VI, VO)
⑨ Radius

Catalog No.	Page

Fiberglass Cable Tray Fittings Except Reducing/Expanding Fittings

P ② ③ C ⑤ HB ⑦ - ⑧ ⑨ ..... GRP-8 – GRP-11
P ② ③ C ⑤ HT ⑦ - ⑧ GRP-12
P ② ③ C ⑤ HX ⑦ - ⑧ GRP-13
P ② ③ C ⑤ VI ⑦ - ⑧ ⑨ ..... GRP-15 – GRP-18
P ② ③ C ⑤ VO ⑦ - ⑧ ⑨ ..... GRP-15 – GRP-18

Materials
F = Polyester Resin
FD = Polyester Resin w/ Carbon Surface Veil
FZ = Zero Halogen Resin
FD = Zero Halogen Resin w/ Carbon Surface Veil

Prefix
Example: 100 F 225 ND 03C HB - 300 - 90 - R600
① ② ③ ④ ⑤ ⑥ ⑦ ⑧ ⑨

① Height
② Material
③ Rung Spaqcing
④ Rung Shape & Orientation
⑤ Side Rail Series
⑥ Fitting Type
⑦ Width
⑧ Angle (HB, VI, VO)
⑨ Radius

Catalog No.	Page

Fiberglass Cable Ladder Fittings Except Reducing/Expanding Fittings

① ② ③ ND ⑤ HB - ⑦ - ⑧ ⑨ ..... GRP-31 – GRP-34
① ② ③ ND ⑤ HT - ⑦ - ⑨ GRP-35
① ② ③ ND ⑤ HX - ⑦ - ⑨ GRP-36
① ② ③ ND ⑤ VI - ⑦ - ⑧ ⑨ ..... GRP-38 – GRP-41
① ② ③ ND ⑤ VO - ⑦ - ⑧ ⑨ ..... GRP-38 – GRP-41

Materials
F = Polyester Resin
FD = Polyester Resin w/ Carbon Surface Veil
FZ = Zero Halogen Resin
FD = Zero Halogen Resin w/ Carbon Surface Veil

Prefix
Example: P 050 V C F - 300 - SR - 200
① ② ③ ④ ⑤ ⑥ ⑦ ⑧

① Tray Type
② Height
③ Bottom Type
④ Flange Type
⑤ Material
⑥ Width 1
⑦ Fitting Type
⑧ Width 2

Catalog No.	Page

Fiberglass Cable Tray Fittings Reducer Fittings

P ② ③ C ⑤ - ⑥ LR - ⑧ GRP-14
P ② ③ C ⑤ - ⑥ RR - ⑧ GRP-14
P ② ③ C ⑤ - ⑥ SR - ⑧ GRP-14

Materials
F = Polyester Resin
FD = Polyester Resin w/ Carbon Surface Veil
FZ = Zero Halogen Resin
FD = Zero Halogen Resin w/ Carbon Surface Veil

Prefix
Example: 100 F 225 N D 03C - 300 - SR - 100
① ② ③ ④ ⑤ ⑥ ⑦ ⑧ ⑨

① Height
② Material
③ Rung Spaqcing
④ Rung Shape
⑤ Rung Orientation
⑥ Side Rail Series
⑦ Width 1
⑧ Fitting Type
⑨ Width 2

Catalog No.	Page

Fiberglass Cable Ladder Fittings Reducer Fittings

① ② ③ ④ D ⑥ - ⑦ - LR - ⑨ GRP-37
① ② ③ ④ D ⑥ - ⑦ - RR - ⑨ GRP-37
① ② ③ ④ D ⑥ - ⑦ - SR - ⑨ GRP-37

Materials
F = Polyester Resin
FD = Polyester Resin w/ Carbon Surface Veil
FZ = Zero Halogen Resin
FD = Zero Halogen Resin w/ Carbon Surface Veil

NEMA 12B Aluminum Cable Ladder Accessories

Not all accessories for aluminum cable ladder are aluminum only. Those finishes and part numbers will be listed in this section.

Catalog No.	Page
NEMA 12B Aluminum Cable Ladder Accessories	
9A-1103-width	AL-5
9A-9012	AL-7
9G-1158 Series	AL-5
9P-5506-22SH	AL-6
9P-5509-22SH	AL-6
9P-5512-22SH	AL-6
9P-5518-22SH	AL-6
9P-5524-22SH	AL-6
9P-5530-22SH	AL-6
9P-5536-22SH	AL-6
9P-5542-22SH	AL-6
9ZN-1204	AL-5
9ZN-1204NB	AL-5
9ZN-9012	AL-7
99-30	AL-5
R4A-DHB	AL-6
R4A-DSL-length	AL-6
R4A-DVI-angle radius	AL-6
R4A-DVO-angle radius	AL-6
R4A-END-width	AL-5
R4A-ESP	AL-4
R4A-FSP	AL-4
R4A-FTB-width	AL-5
R4A-HDCC-width	AL-7
R4A-RSP-C-reduction	AL-4
R4A-RSP-S-reduction	AL-4
R4A-SSP	AL-4
R4A-TTB	AL-4
R4A-VSP	AL-4
R5A-DHB	AL-6
R5A-DSL-length	AL-6
R5A-DVI-angle radius	AL-6
R5A-DVO-angle radius	AL-6
R5A-END-width	AL-5
R5A-ESP	AL-4
R5A-FSP	AL-4
R5A-FTB-width	AL-5
R5A-HDCC-width	AL-7
R5A-RSP-C-reduction	AL-4
R5A-RSP-S-reduction	AL-4
R5A-SSP	AL-4
R5A-TTB	AL-4
R5A-VSP	AL-4
R6A-DHB	AL-6
R6A-DSL-length	AL-6
R6A-DVI-angleRradius	AL-6
R6A-DVO-angleRradius	AL-6
R6A-END-width	AL-5
R6A-ESP	AL-4
R6A-FSP	AL-4
R6A-FTB-width	AL-5
R6A-HDCC-width	AL-7
R6A-RSP-C-reduction	AL-4
R6A-RSP-S-reduction	AL-4
R6A-SSP	AL-4
R6A-TTB	AL-4
R6A-VSP	AL-4
R7A-DHB	AL-6
R7A-DSL-length	AL-6
R7A-DVI-angle radius	AL-6
R7A-DVO-angle radius	AL-6
R7A-END-width	AL-5
R7A-ESP	AL-4
R7A-FSP	AL-4
R7A-FTB-width	AL-5
R7A-HDCC-width	AL-7
R7A-RSP-C-reduction	AL-4
R7A-RSP-S-reduction	AL-4
R7A-SSP	AL-4
R7A-TTB	AL-4
R7A-VSP	AL-4
RAA-DSP-45	AL-4
RAA-DSP-46	AL-4
RAA-DSP-47	AL-4
RAA-DSP-56	AL-4
RAA-DSP-57	AL-4
RAA-DSP-67	AL-4

Materials
A = Aluminum
G = Hot-Dipped Galvanized
P = Pre-Galvanized Steel
ZN = Zinc Plated

Series 2, 3, 4, & 5 Aluminum Cable Ladder Accessories

Not all accessories for aluminum cable ladder are aluminum only. Those finishes and part numbers will be listed in this section.

Catalog No.	Page
Aluminum Cable Ladder Accessories	
73A-Length	AL-36
73A-90HBFL	AL-36
73A-(angle)VI(radius)	AL-36
73A-(angle)VO(radius)	AL-36
74A-Length	AL-36
74A-90HBFL	AL-36
74A-(angle)VI(radius)	AL-36
74A-(angle)VO(radius)	AL-36
75A-Length	AL-36
75A-90HBFL	AL-36
75A-(angle)VI(radius)	AL-36
75A-(angle)VO(radius)	AL-36
76A-Length	AL-36
76A-90HBFL	AL-36
76A-(angle)VI(radius)	AL-36
76A-(angle)VO(radius)	AL-36
99-40	AL-37
99-1124	AL-35
99-1620	AL-37
99-2125-15	AL-35
99-9980-tray width	AL-47
99-9982	AL-36
99-N1	AL-37
99-NP300	AL-39
99-PE34	AL-38
99-PE36	AL-39
9A-tray width-9044	AL-47
9A-tray width-9044P	AL-47
9A-tray width-9054	AL-47
9A-tray width-9054P	AL-47
9A-tray width-9064	AL-47
9A-tray width-9064P	AL-47
9A-tray width-9074	AL-47
9A-tray width-9074P	AL-47
9A-1004	AL-33
9A-1004-1/2	AL-33
9A-1005	AL-33
9A-1005-1/2	AL-33

continued on next page

Series 2, 3, 4, & 5 Aluminum Cable Ladder Accessories

Not all accessories for aluminum cable ladder are aluminum only.
Those finishes and part numbers will be listed in this section.

Catalog No.	Page
9A-1006	AL-33
9A-1006-1/2	AL-33
9A-1007	AL-33
9A-1007-1/2	AL-33
9A-1014	AL-33
9A-1015	AL-33
9A-1016	AL-33
9A-1017	AL-33
9A-1024	AL-33
9A-1025	AL-33
9A-1026	AL-33
9A-1027	AL-33
9A-1034	AL-33
9A-1034-12	AL-33
9A-1034-36	AL-33
9A-1035	AL-33
9A-1035-12	AL-33
9A-1035-36	AL-33
9A-1036	AL-33
9A-1036-12	AL-33
9A-1036-36	AL-33
9A-1037	AL-33
9A-1037-12	AL-33
9A-1037-36	AL-33
9A-1045	AL-33
9A-1046	AL-33
9A-1047	AL-33
9A-1054	AL-34
9A-1055	AL-34
9A-1056	AL-34
9A-1057	AL-34
9A-1060	AL-33
9A-1061	AL-33
9A-1062	AL-33
9A-1064-reduction	AL-34
9A-1065-reduction	AL-34
9A-1066-reduction	AL-34
9A-1067-reduction	AL-34
9A-1074-tray width	AL-34
9A-1075-tray width	AL-34
9A-1076-tray width	AL-34

Catalog No.	Page
9A-1077-tray width	AL-34
9A-1084-tray width	AL-34
9A-1085-tray width	AL-34
9A-1086-tray width	AL-34
9A-1087-tray width	AL-34
9A-1104-tray width	AL-35
9A-1104T-tray width	AL-35
9A-1205	AL-38
9A-1205NB	AL-38
9A-1224	AL-43
9A-1225	AL-43
9A-1226	AL-43
9A-1227	AL-43
9A-1240	AL-34
9A-2044	AL-34
9A-2045	AL-34
9A-2046	AL-34
9A-2047	AL-34
9A-2130	AL-37
9A-6006	AL-33
9A-6007	AL-33
9A-9012	AL-47
9G-1158 Series	AL-35
9G-1205	AL-38
9G-1205NB	AL-38
9G-1249	AL-39
9G-1249HD	AL-39
9G-5324	AL-37
9G-5325	AL-37
9G-5326	AL-37
9G-5327	AL-37
9G-5500-1/2	AL-41
9G-55xx-22SHA Series	AL-41
9GRN-55xx-22SHA Series	AL-41
9P-55xx-22SH Series	AL-41
9P-9043	AL-47
9P-9053	AL-47
9P-9063	AL-47
9P-9073	AL-47
9SS4-1241	AL-43
9SS4-1242	AL-43

Catalog No.	Page
9SS4-2351	AL-37
9SS4-2352	AL-37
9SS6-1205	AL-38
9SS6-1205NB	AL-38
9SS6-1241	AL-43
9SS6-1242	AL-43
9ZN-1150 Series	AL-35
9ZN-1155 Series	AL-35
9ZN-1204	AL-38
9ZN-1204NB	AL-38
9ZN-1205	AL-38
9ZN-1205NB	AL-38
9ZN-1208	AL-38
9ZN-1208NB	AL-38
9ZN-1241	AL-43
9ZN-1242	AL-43
9ZN-1249	AL-39
9ZN-1249HD	AL-39
9ZN-2351	AL-37
9ZN-2352	AL-37
9ZN-5200	AL-40
9ZN-5212	AL-40
9ZN-5224	AL-40
9ZN-5324	AL-37
9ZN-5325	AL-37
9ZN-5326	AL-37
9ZN-5327	AL-37
9ZN-5500-1/2	AL-41
9ZN-9002	AL-36
9ZN-9012	AL-47
9ZN-9112 Series	AL-47
9ZN-9113 Series	AL-47
ATR Series	AL-38
B212-1/4 or 3/8	AL-44
B297 Series	AL-42
B305-B308	AL-44
B312 Series	AL-44
B321 Series	AL-44
B355	AL-43
B409 Series	AL-42

continued on next page

Series 2, 3, 4, & 5 Aluminum Cable Ladder Accessories

Not all accessories for aluminum cable ladder are aluminum only. Those finishes and part numbers will be listed in this section.

Catalog No.	Page
B409UF-12	AL-42
B409UF-21	AL-42
B441-22	AL-43
B441-22A	AL-43
B494 Series	AL-42
B501 Series	AL-42
B655-3/8	AL-38
B655-1/2	AL-38
B700-Jx Series	AL-44
B750-Jx Series	AL-44
BP081SS	AL-37
BP110SS	AL-37
BP135SS	AL-37
BP175SS	AL-37
BP205SS	AL-37
BP250SS	AL-37
BP300SS	AL-37
BP325SS	AL-37
BP375SS	AL-37
BP425SS	AL-37
BP475SS	AL-37
SFHN 3/8"-16	AL-34
SNCB 3/8" x 3/4"	AL-34

Materials
A = Aluminum
G = Hot-Dipped Galvanized
GRN = Dura-Green Painted
P = Pre-Galvanized Steel
SS = Stainless Steel 304
SS4 = Stainless Steel 304
SS6 = Stainless Steel 316
ZN = Zinc Plated

Perforated & Solid Cable Tray Accessories

Catalog No.	Page
M6x16PHS*	PS-10
M6SFHN*	PS-10
PBE-025**-Width	PS-9
PBE-050**-Width	PS-9
PBE-075**-Width	PS-9
PBE-100**-Width	PS-9
PBS**-(1, 2, 3, 4, 5)	PS-8
PCCC025**-Width	PS-10
PCCC050**-Width	PS-10
PCCC075**-Width	PS-10
PCCC100**-Width	PS-10
PDO**-050	PS-10
PDO**-100	PS-10
PDO**-150	PS-10
PDO**-100	PS-10
PDO**-300	PS-10
PDO**-400	PS-10
PDO**-500	PS-10
PDO**-600	PS-10
PDO**-900	PS-10
PHAM025**	PS-8
PHAM050**	PS-8
PHAM075**	PS-8
PHAM100**	PS-8
PHD025**	PS-10
PHD050**	PS-10
PHD075**	PS-10
PHD100**	PS-10
PLR025**-Width	PS-9
PLR050**-Width	PS-9
PLR075**-Width	PS-9
PLR100**-Width	PS-9
PRR025**-Width	PS-9
PRR050**-Width	PS-9
PRR075**-Width	PS-9
PRR100**-Width	PS-9
PSP025**	PS-8
PSP050**	PS-8
PSP075**	PS-8
PSP100**	PS-8
PSR025**-Width	PS-9
PSR050**-Width	PS-9
PSR075**-Width	PS-9
PSR100**-Width	PS-9
PVA025**	PS-8
PVA050**	PS-8
PVA075**	PS-8
PVA100**	PS-8
PWCC025**-Width	PS-10
PWCC050**-Width	PS-10
PWCC075**-Width	PS-10
PWCC100**-Width	PS-10

Materials
* G = Hot-Dipped Galvanized
SS6 = Stainless Steel 316
N = Nylon
** Aluminum
P = Pre-Galvanized Steel
G = Hot-Dipped Galvanized
SS6 = Stainless Steel 316

Steel Cable Ladder Series 1 Accessories

Not all accessories for steel cable ladder are steel only. Those finishes and part numbers will be listed in this section.

Catalog No.	Page
Series 1 Cable Ladder Accessories	
72G-Length	LDS-8
72G-90HBFL	LDS-8
72G-(angle)VI(radius)	LDS-8
72G-(angle)VO(radius)	LDS-8
72P-Length	LDS-8
72P-90HBFL	LDS-8
72P-(angle)VI(radius)	LDS-8
72P-(angle)VO(radius)	LDS-8
737G-Length	LDS-8
737G-90HBFL	LDS-8
737G-(angle)VI(radius)	LDS-8
737G-(angle)VO(radius)	LDS-8
737P-Length	LDS-8
737P-90HBFL	LDS-8
737P-(angle)VI(radius)	LDS-8
737P-(angle)VO(radius)	LDS-8
747G-Length	LDS-8
747G-90HBFL	LDS-8
747G-(angle)VI(radius)	LDS-8
747G-(angle)VO(radius)	LDS-8
747P-Length	LDS-8
747P-90HBFL	LDS-8
747P-(angle)VI(radius)	LDS-8
747P-(angle)VO(radius)	LDS-8
99-9980-tray width	LDS-11
99-9982	LDS-8
99-N1	LDS-7
9A-2130	LDS-7
9G-1104T-tray width	LDS-8
9G-1158 Series	LDS-7
9G-2004-1/2	LDS-5
9G-2005-1/2	LDS-5
9G-2006-1/2	LDS-5
9G-2007-1/2	LDS-5
9G-4004	LDS-5
9G-4005	LDS-5
9G-4006	LDS-5
9G-4007	LDS-5
9G-4014	LDS-5
9G-4015	LDS-5
9G-4016	LDS-5
9G-4017	LDS-5
9G-7024	LDS-5
9G-8004	LDS-5
9G-8024	LDS-5
9G-8025	LDS-5
9G-8026	LDS-5
9G-8034	LDS-5
9G-8034-12	LDS-5
9G-8034-36	LDS-5
9G-8035	LDS-5
9G-8035-12	LDS-5
9G-8035-36	LDS-5
9G-8036	LDS-5
9G-8036-12	LDS-5
9G-8036-36	LDS-5
9G-8045	LDS-5
9G-8046	LDS-5
9G-8054	LDS-6
9G-8055	LDS-6
9G-8056	LDS-6
9G-8060	LDS-5
9G-8064-reduction	LDS-6
9G-8065-reduction	LDS-6
9G-8066-reduction	LDS-6
9G-8074-tray width	LDS-6
9G-8075-tray width	LDS-6
9G-8076-tray width	LDS-6
9G-8084-tray width	LDS-6
9G-8085-tray width	LDS-6
9G-8086-tray width	LDS-6
9G-9014	LDS-11
9G-9015	LDS-11
9G-9016	LDS-11
9G-9019	LDS-11
9G-tray width-9040	LDS-11
9G-9043	LDS-11
9G-tray width-9044	LDS-11
9G-9053	LDS-11
9G-tray width-9054	LDS-11
9G-9063	LDS-11
9G-tray width-9064	LDS-11
9G-9243	LDS-11
9P-1104T-tray width	LDS-8
9P-2004-1/2	LDS-5
9P-2005-1/2	LDS-5
9P-2006-1/2	LDS-5
9P-2007-1/2	LDS-5
9P-8054	LDS-6
9P-8055	LDS-6
9P-8056	LDS-6
9P-8064-reduction	LDS-6
9P-8065-reduction	LDS-6
9P-8066-reduction	LDS-6
9P-8074-tray width	LDS-6
9P-8075-tray width	LDS-6
9P-8076-tray width	LDS-6
9P-8084-tray width	LDS-6
9P-8085-tray width	LDS-6
9P-8086-tray width	LDS-6
9P-tray width-9040	LDS-11
9P-9043	LDS-11
9P-tray width-9044	LDS-11
9P-9053	LDS-11
9P-tray width-9054	LDS-11
9P-9063	LDS-11
9P-tray width-9064	LDS-11
9SS4-2351	LDS-7
9SS4-2352	LDS-7
9ZN-1113	LDS-8
9ZN-1204	LDS-7
9ZN-1204NB	LDS-7
9ZN-1208	LDS-7
9ZN-1208NB	LDS-7
9ZN-2351	LDS-7
9ZN-2352	LDS-7
9ZN-4004	LDS-5
9ZN-4005	LDS-5
9ZN-4006	LDS-5
9ZN-4007	LDS-5
9ZN-4014	LDS-5
9ZN-4015	LDS-5
9ZN-4016	LDS-5
9ZN-4017	LDS-5
9ZN-5324	LDS-8
9ZN-5325	LDS-8

continued on next page

Steel Cable Ladder Series 1 Accessories

Not all accessories for steel cable ladder are steel only. Those finishes and part numbers will be listed in this section.

Catalog No.	Page
9ZN-5326	LDS-8
9ZN-7024	LDS-5
9ZN-8004	LDS-5
9ZN-8024	LDS-5
9ZN-8025	LDS-5
9ZN-8026	LDS-5
9ZN-8034	LDS-5
9ZN-8034-12	LDS-5
9ZN-8034-36	LDS-5
9ZN-8035	LDS-5
9ZN-8035-12	LDS-5
9ZN-8035-36	LDS-5
9ZN-8036	LDS-5
9ZN-8036-12	LDS-5
9ZN-8036-36	LDS-5
9ZN-8045	LDS-5
9ZN-8046	LDS-5
9ZN-8060	LDS-5
9ZN-9014	LDS-10
9ZN-9015	LDS-10
9ZN-9016	LDS-10
9ZN-9019	LDS-10
9ZN-9243	LDS-10
ATR Series	LDS-7
B655 Series	LDS-7
RNCB 3/8"-16 x 3/4"	LDS-6
SFHN 3/8"-16	LDS-6

Materials
A = Aluminum
G = Hot-Dipped Galvanized
P = Pre-Galvanized Steel
SS4 = Stainless Steel 304
ZN = Zinc Plated

Catalog No.	Page

Slotted Steel Cable Ladder Accessories

Not all accessories for steel cable ladder are steel only. Those finishes and part numbers will be listed in this section.

Catalog No.	Page

Slotted Steel Cable Tray Accessories

99-9982	CL-10
99-N1	CL-8
9G-1204	CL-9
9G-1205	CL-9
9G-1208	CL-9
9SS-1204	CL-9
9SS-1205	CL-9
9SS-1208	CL-9
ATR M6	CL-8
ATR M8	CL-8
ATR M10	CL-8
ATR M12	CL-8
B655-M6	CL-8
B655-M8	CL-8
B655-M10	CL-8
B655-M12	CL-8
ELAS	CL-7
LBD125G-1000	CL-10
LBD125SS6-1000	CL-10
LBD150G-1000	CL-10
LBD150SS6-1000	CL-10
LBE125G150	CL-8
LBE125G300	CL-8
LBE125G450	CL-8
LBE125G600	CL-8
LBE125G750	CL-8
LBE125G900	CL-8
LBE125SS6150	CL-8
LBE125SS6300	CL-8
LBE125SS6450	CL-8
LBE125SS6600	CL-8
LBE125SS6750	CL-8
LBE125SS6900	CL-8
LBE150G150	CL-8
LBE150G300	CL-8

continued on next page

Slotted Steel Cable Ladder Accessories

Not all accessories for steel cable ladder are steel only.
Those finishes and part numbers will be listed in this section.

Catalog No.	Page
LBE150G450	CL-8
LBE150G600	CL-8
LBE150G750	CL-8
LBE150G900	CL-8
LBE150SS6150	CL-8
LBE150SS6300	CL-8
LBE150SS6450	CL-8
LBE150SS6600	CL-8
LBE150SS6750	CL-8
LBE150SS6900	CL-8
LCCSDMZ	CL-28
LCCSDSS6	CL-28
LCCSDRMZ	CL-28
LCCSDRSS6	CL-28
LCH125(tray width)G	CL-28
LCH125(tray width)SS6	CL-28
LCH150(tray width)G	CL-28
LCH150(tray width)SS6	CL-28
LCL125G	CL-28
LCL125SS6	CL-28
LCL150G	CL-28
LCL150SS6	CL-28
LDOG150150	CL-8
LDOG150300	CL-8
LDOG150450	CL-8
LDOG150600	CL-8
LDOG150750	CL-8
LDOG150900	CL-8
LDOSS6150150	CL-8
LDOSS6150300	CL-8
LDOSS6150450	CL-8
LDOSS6150600	CL-8
LDOSS6150750	CL-8
LDOSS6150900	CL-8
LES125G	CL-6
LES125SS6	CL-6
LES150G	CL-6
LES150SS6	CL-6
LHA125G	CL-6
LHA125SS6	CL-6
LHA150G	CL-6

Catalog No.	Page
LHA150SS6	CL-6
LHD121X	CL-9
LHD123X	CL-9
LHE125G	CL-7
LHE125SS6	CL-7
LHE150G	CL-7
LHE150SS6	CL-7
LID125G(angle)(radius)	CL-10
LID125SS6(angle)(radius)	CL-10
LID150G(angle)(radius)	CL-10
LID150SS6(angle)(radius)	CL-10
LOD125G(angle)(radius)	CL-10
LOD125SS6(angle)(radius)	CL-10
LOD150G(angle)(radius)	CL-10
LOD150SS6(angle)(radius)	CL-10
LRE125G	CL-6
LRE125SS6	CL-6
LRE150G	CL-6
LRE150SS6	CL-6
LRS125G	CL-6
LRS125SS6	CL-6
LRS150G	CL-6
LRS150SS6	CL-6
LSD125G-3000	CL-10
LSD125P-3000	CL-10
LSD150G-3000	CL-10
LSD150P-3000	CL-10
LSP125G	CL-6
LSP125SS6	CL-6
LSP150G	CL-6
LSP150SS6	CL-6
LSR125G-150	CL-7
LSR125G-300	CL-7
LSR125G-450	CL-7
LSR125G-600	CL-7
LSR125G-750	CL-7
LSR125SS6-150	CL-7
LSR125SS6-300	CL-7
LSR125SS6-450	CL-7
LSR125SS6-600	CL-7
LSR125SS6-750	CL-7

Catalog No.	Page
LSR150G-150	CL-7
LSR150G-300	CL-7
LSR150G-450	CL-7
LSR150G-600	CL-7
LSR150G-750	CL-7
LSR150SS6-150	CL-7
LSR150SS6-300	CL-7
LSR150SS6-450	CL-7
LSR150SS6-600	CL-7
LSR150SS6-750	CL-7
LTC125G	CL-8
LTC125SS6	CL-8
LTC150G	CL-8
LTC150SS6	CL-8
LVA125G	CL-6
LVA125SS6	CL-6
LVA150G	CL-6
LVA150SS6	CL-6
SNCB	CL-7
SFHN	CL-7

Materials

G = Hot-Dipped Galvanized

SS6 = Stainless Steel 316

MZ = Mechanical Galvanized

Fiberglass Cable Tray Accessories

Catalog No.	Page
M6x12.5STSSS6	GRP-6
M6SFHNSS6	GRP-6
PBE050(x)(width)	GRP-5
PBE100(x)(width)	GRP-5
PCH050SS6	GRP-6
PCH100SS6	GRP-6
PEP100(x)	GRP-5
PHAM050(x)	GRP-5
PHAM100(x)	GRP-5
PSD050(x)-Length	GRP-6
PSD100(x)-Length	GRP-6
PSP050(x)	GRP-5
PSP100(x)	GRP-5
PVA050(x)	GRP-5
PVA100(x)	GRP-5
PVC050SS6	GRP-6
PVC100SS6	GRP-6
PWCC050(x)(width)	GRP-20
PWCC100(x)(width)	GRP-20
TPDR	GRP-20

Materials
(x) = Insert
- F for Polyester Resin
- FZ for Zero Halogen Resin
- FD for Polyester Resin w/ Carbon Surface Veil
- FH for Zero Halogen Resin w/ Carbon Surface Veil

Fiberglass Cable Ladder Accessories

Catalog No.	Page
9F-2008	GRP-29
9F-2009	GRP-29
9F-2010	GRP-29
9F-2011	GRP-29
9F-2012	GRP-29
9F-2013	GRP-29
9F-2014	GRP-29
9F-2015	GRP-29
9F-2016	GRP-29
9F-2017	GRP-29
LBE075(x)(width)	GRP-28
LBE100(x)(width)	GRP-28
LBE150(x)(width)	GRP-28
LCF075(x)	GRP-43
LCF100(x)	GRP-43
LCF150(x)	GRP-43
LCR075(x)	GRP-43
LCR100(x)	GRP-43
LCR150(x)	GRP-43
LDO(x)	GRP-28
LES075(x)	GRP-27
LES100(x)	GRP-27
LES150(x)	GRP-27
LHA075(x)	GRP-27
LHA100(x)	GRP-27
LHA150(x)	GRP-27
LHC075(x)02C	GRP-28
LHC100(x)02C	GRP-28
LHC150(x)03C	GRP-28
LHC150(x)04C	GRP-28
LHC150(x)05C	GRP-28
LSD075(x)-3000	GRP-29
LSD100(x)-3000	GRP-29
LSD150(x)-3000	GRP-29
LSP075(x)	GRP-27
LSP100(x)	GRP-27
LSP150(x)	GRP-27
LVA075(x)	GRP-27
LVA100(x)	GRP-27
LVA150(x)	GRP-27
LVC075(x)02C	GRP-28
LVC100(x)02C	GRP-28
LVC150(x)03C	GRP-28
LVC150(x)04C	GRP-28
LVC150(x)05C	GRP-28
LZC075(x)02C	GRP-28
LZC100(x)02C	GRP-28
LZC150(x)03C	GRP-28
LZC150(x)04C	GRP-28
LZC150(x)05C	GRP-28
PWCC075(x)(width)	GRP-43
PWCC100(x)(width)	GRP-43
PWCC150(x)(width)	GRP-43
RSK-010	GRP-29
TPDR	GRP-43

Materials
(x) = Insert
- F for Polyester Resin
- FZ for Zero Halogen Resin
- FD for Polyester Resin w/ Carbon Surface Veil
- FH for Zero Halogen Resin w/ Carbon Surface Veil

Cable Cleats & Accessories

Catalog No.	Page
9SS6-CCB-A	CC-4
9SS6-CCB-B	CC-4
9SS6-CCB-C	CC-4
9SS6-CCS2832	CC-3
9SS6-CCS3034	CC-3
9SS6-CCS3236	CC-3
9SS6-CCS3438	CC-3
9SS6-CCS3640	CC-3
9SS6-CCS3842	CC-3
9SS6-CCS4044	CC-3
9SS6-CCS4246	CC-3
9SS6-CCS4448	CC-3
9SS6-CCS4650	CC-3
9SS6-CCS4852	CC-3
9SS6-CCS5054	CC-3
9SS6-CCS5256	CC-3
9SS6-CCS5458	CC-3
9SS6-CCS5660	CC-3
9SS6-CCS5862	CC-3
9SS6-CCS6064	CC-3
9SS6-CCS6266	CC-3
9SS6-CCS6468	CC-3
9SS6-CCS6670	CC-3
9SS6-CCS6872	CC-3
9SS6-CCS7074	CC-3
9SS6-CCS7276	CC-3
9SS6-CCS7478	CC-3
9SS6-CCS7680	CC-3
9SS6-CCS7682	CC-3
9SS6-CCS8084	CC-3
9SS6-CCS8286	CC-3
9SS6-CCS8488	CC-3
9SS6-CCS8690	CC-3
9SS6-CCS8892	CC-3
9SS6-CCS9094	CC-3
9SS6-CCS9296	CC-3
9SS6-CCS94104	CC-3
9SS6-CCS100112	CC-3
9SS6-CCS106118	CC-3
9SS6-CCS112124	CC-3
9SS6-CCS118130	CC-3
9SS6-CCS127150	CC-3
9SS6-CCS132144	CC-3
9SS6-CCS138150	CC-3

Catalog No.	Page
9SS6-CCT1323	CC-2
9SS6-CCT2125	CC-2
9SS6-CCT2329	CC-2
9SS6-CCT2531	CC-2
9SS6-CCT2733	CC-2
9SS6-CCT2935	CC-2
9SS6-CCT3238	CC-2
9SS6-CCT3541	CC-2
9SS6-CCT3844	CC-2
9SS6-CCT4248	CC-2
9SS6-CCT4551	CC-2
9SS6-CCT4753	CC-2
9SS6-CCT4955	CC-2
9SS6-CCT5157	CC-2
9SS6-CCT5359	CC-2
9SS6-CCT5561	CC-2
9SS6-CCT5763	CC-2
9SS6-CCT5965	CC-2
9SS6-CCT6167	CC-2
9SS6-CCT6369	CC-2
9SS6-CCT6571	CC-2
9SS6-CCT6773	CC-2
9SS6-CCT6975	CC-2
9SS6-CCT7177	CC-2
9SS6-CCT7379	CC-2
9SS6-CCT7581	CC-2
9SS6-CCT7783	CC-2
9SS6-CCT7985	CC-2
9SS6-CCT8187	CC-2
9SS6-CCT8389	CC-2
9SS6-CCT8692	CC-2
9SS6-CCT8896	CC-2
9SS6-CCT9199	CC-2
9SS6-CCT96103	CC-2
9SS6-CCT99107	CC-2
9SS6-CCT103111	CC-2
9SS6-CCT107115	CC-2
9SS6-CCT111119	CC-2
9SS6-CCT115123	CC-2
9SS6-CCT119128	CC-2

Strut Support Systems

Channels

Catalog No.	Page
B11	BF-11 & BF-12
B11SH	BF-11 & BF-12
B11	BF-11 & BF-12
B11SH	BF-11 & BF-12
B22	BF-13 & BF-14
B22SH	BF-13 & BF-14
B24	BF-13 & BF-14
B24SH	BF-13 & BF-14
B32	BF-15
B32SH	BF-15
B42	BF-16
B42SH	BF-16
B52	BF-17 & BF-18
B52SH	BF-17 & BF-18

Hardware

Catalog No.	Page
ATR Series	BF-22
BMS-6	BF-20
BMS-6M	BF-20
BMS-6S	BF-20
BMS-8	BF-20
BMS-8M	BF-20
BMS-8S	BF-20
BMS-10	BF-20
BMS-10M	BF-20
BMS-10S	BF-20
BMS-12	BF-20
BMS-12M	BF-20
BMS-12S	BF-20
FW Series	BF-22
HN Series	BF-22
HHCS Series	BF-22
NWM6	BF-21
NWM8	BF-21
NWM10	BF-21
NWM12	BF-21
SLNW6	BF-21
SLNW8	BF-21
SLNW10	BF-21
SLNW12	BF-21
SLWNM6	BF-21
SLWNM8	BF-21
SLWNM10	BF-21
SLWNM12	BF-21

Fittings

Catalog No.	Page
B101	BF-24
B102	BF-25
B103	BF-25
B104	BF-25
B107	BF-25
B129	BF-24
B133	BF-24
B140	BF-24
B141	BF-24
B143	BF-24
B200 Series	BF-24
B200-D Series	BF-24
B217P	BF-21
B230	BF-25
B279FL	BF-26
B281AFL	BF-26
B297 Series	BF-25
B341	BF-24
B409 Series	BF-25
B441-22	BF-26
B441-22A	BF-26
B825-22	BF-21
B825-52	BF-21

METRIC CONVERSION CHART

To Convert From	To	Multiply By
Angle		
degree	radian (rad)	0.01745329
radian (rad)	degree	57.29578
Area		
foot^2	square meter (m^2)	0.09290304
inch^2	square meter (m^2)	0.00064516
circular mil	square meter (m^2)	0.0000000005067075
sq. centimeter (cm^2)	square inch (in^2)	0.1550003
square meter (m^2)	foot^2	10.76391
square meter (m^2)	inch^2	1550.003
square meter (m^2)	circular mil	1973523000.0
Temperature		
degree Fahrenheit	degree Celsius	$t^{oC}=(t^{oF}-32)/1.8$
degree Celsius	degree Fahrenheit	$t^{oF}=1.8t^{oC}+32$
Force		
pounds-force (lbf)	newtons (N)	4.448222

To Convert From	To	Multiply By
Length		
foot (ft)	meter (m)	0.3048
inch (in)	meter (m)	0.0254
mil	meter (m)	0.0000254
inch (in)	micrometer (µm)	25400.00
meter (m)	foot (ft)	3.280840
meter (m)	inch (in)	39.37008
meter (m)	mil	39370.08
micrometer (µm)	inch (in)	0.00003937008
Volume		
foot^3	cubic meter (m^3)	0.02831685
inch^3	cubic meter (m^3)	0.00001638706
cubic centimeter (cm^2)	cubic inch (in^3)	0.06102374
cubic meter (m^3)	foot^3	35.31466
cubic meter (m^3)	inch^3	61023.76
gallon (U.S. liquid)	cubic meter (m^3)	0.003785412
Section Properties		
section modulus S (in^3)	S (m^3)	0.00001638706
moment of inertia I (in^4)	I (m^4)	0.0000004162314
modulus of elasticity E (psi)	E (Pa)	6894.757
section modulus S (m^3)	S (in^3)	61023.74
moment of inertia I (m^4)	I (in^4)	2402510.0
modulus of elasticity E (Pa)	E (psi)	0.0001450377

To Convert From	To	Multiply By
Bending Moment or Torque		
lbf • ft	newton meter (N•m)	1.355818
lbf • in	newton meter (N•m)	0.1129848
N•m	lbf • ft	0.7375621
N•m	lbf • in	8.850748
Mass		
ounce (avoirdupois)	kilogram (kg)	0.02834952
pound (avoirdupois)	kilogram (kg)	0.4535924
ton (short, 2000 lb)	kilogram (kg)	907.1847
ton (long, 2240 lb)	kilogram (kg)	1016.047
kilogram (kg)	ounce (avoirdupois)	35.27396
kilogram (kg)	pound (avoirdupois)	2.204622
kilogram (kg)	ton (short, 2000 lb)	0.001102311
kilogram (kg)	ton (long, 2240 lb)	0.0009842064
Mass Per Unit Length		
lb/ft	kilogram per meter (kg/m)	1.488164
lb/in	kilogram per meter (kg/m)	17.85797
kg/m	lb/ft	0.6719689
kg/m	lb/in	0.5599741
Mass Per Unit Volume		
lb/ft^3	kilogram per cubic meter (kg/m^3)	16.01846
lb/in^3	kilogram per cubic meter (kg/m^3)	27679.9
kg/m^3	lb/ft^3	0.06242797
kg/m^3	lb/in^3	0.0000361273
lbs/ft^3	lbs/in^3	1728.0
Mass Per Unit Area		
lb/ft^2	kilogram per square meter (kg/m^2)	4.882428
kg/m^2	pound per square foot (lb/ft^2)	0.2048161
Pressure or Stress		
lbf/in^2 (psi)	pascal (Pa)	6894.757
kip/in^2 (ksi)	pascal (Pa)	6894757.0
lbf/in^2 (psi)	megapascals (MPa)	0.006894757
pascal (Pa)	pound-force per square inch (psi)	0.0001450377
pascal (Pa)	kip per square inch (ksi)	0.0000001450377
megapascals (MPa)	lbf/in^2 (psi)	145.0377

Abbreviations

Defl. = Deflection
S.F. = Safety Factor
Ft. = Feet
Pre-galv. = Pre-galvanized Steel
K Factor = Deflection ÷ load in Lbs./Ft.
o.c. = On Center
PVC = Poly Vinyl Chloride
In. = Inch
psi = Pounds per Square Inch
wt./c = Weight pre 100 pieces

Metric Symbols

m = meter
cm = centimeter
mm = millimeter
µm = micrometer
kg = kilogram
N = newton
kN = kilonewton
Pa = pascal
MPa = megapascal

These options are in addition to the Standard Ladder Rungs, Ventilated Trough and Solid Trough type Cable Trays.

Ladder with Strut Rungs

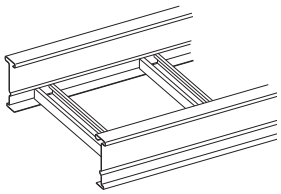

- B44 strut installed as rungs.
- Strut orientation may be channel opening up, channel opening down, or alternating - standard is alternating unless specified otherwise.
- Strut may be solid back or with slotted hole pattern "SH".
- The B-Line strut rung system offers additional cable clamping options relative to the chosen slot orientation.

Examples: 248G09B44-12-144
Strut rung on 9" centers with alternating slot orientation.
248G12B44SHDN-12-144
"SH" Strut rung on 12" centers with channel opening down (Note: replace "DN" with "UP" for channel opening up.)

Marine Rung (Available in Aluminum, HDGAF Steel and Stainless Steel)

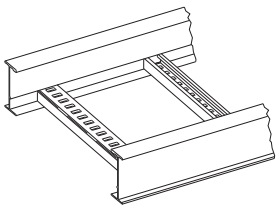

(Aluminum Shown)

- Designed for Series 2 or heavier systems.
- Special rung design to accommodate stainless steel banding of cables (U.S. Coast Guard requirement) with .25" x .69" slots.
- Has applications on land, vertical installation, any location where extra cable positioning/attachment is required.
- Rung strength - Aluminum supports 499 lbs. per rung on 36" wide system with a 1.5 safety factor. Steel supports 755 lbs. per rung on 36" wide system with a 1.5 safety factor.
- New design provides combination of strut fastening and marine rung fastening.

Example: 46A12MR-36-288 or 464G12MR-36-288

Special Rung Spacings: 4" & 18" rung spacing available upon request.

Non-Ventilated

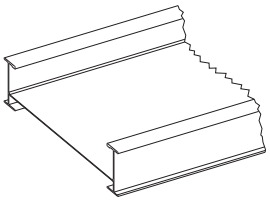

- Solid flat sheet welded into the Cable Tray above the rungs.
- Standard rung spacing is 12 inches.
- The flat sheet may be installed under the rungs, if preferred.
- The flat sheet may be installed over B54 rungs “slot down”.

Examples: 24ASB-36-144
Flat sheet bottom over standard rung on 12" spacing.
24ASBB54-36-144
Flat sheet bottom over B54 strut rung slot down on 12" spacing.

Notes

Notes

U.S. Customer Service Center is staffed Monday through Friday
from 7 a.m. to 5:00 p.m. Central Standard Time.
For more information, visit www.bline.com.

Eaton's B-Line Business
509 West Monroe Street
Highland, IL 62249
United States
Phone: (800) 851-7415
www.cooperbline.com/contactus

Eaton's B-Line Business
5925 McLaughlin Road
Mississauga, ON L5R 1B8
Canada
Phone: (800) 569-3660
www.cooperbline.com/contactca

Eaton's B-Line Business
Walrow Industrial Estate
Somerset, TA9 4AQ
United Kingdom
Phone: (44) 1278 772600
www.cooperbline.com/contactuk

Eaton's B-Line Business
PO Box 70160 - Al Khobar - 31952
Kingdom of Saudi Arabia
Phone: 00966 3 812 2236
www.cooperbline.com/contactme

Eaton's Cooper Singapore
N0. 2 Serangoon North Ave. 5
#06-01 Fu Yu Building, 554911
Singapore
Phone: +65 (0) 62974849

Eaton's Cooper Korea Co., Ltd.
13 Fl Vision Tower, 7072 Yeoksam-dong
Gangnam-gu
Seoul, 135-080
Korea
Phone: +44 (0) 1278 772600

Eaton
1000 Eaton Boulevard
Cleveland, OH 44122
United States
Eaton.com

Eaton's B-Line Business
509 West Monroe Street
Highland, IL 62249
Phone: 800-851-7415
Fax: 618-654-1917
www.cooperbline.com/me

© 2014 Eaton
All Rights Reserved

Printed in USA
Publication No. CTME-14
October 2014

Eaton is a registered trademark

All other trademarks are property
of their respective owners.

Powering Business Worldwide

Cable support systems

B-Line by EATON

Energizing a world that demands more.

Discover today's Eaton.

Powering business worldwide

As a global power management company, we help customers worldwide manage the power needed for buildings, aircraft, trucks, cars, machinery and businesses.

Eaton's innovative technologies help customers manage electrical, hydraulic and mechanical power more reliably, efficiently, safely and sustainably.

EATON

Powering Business Worldwide

We deliver:

- **Electrical solutions** that use less energy, improve power reliability and make the places we live and work safer and more comfortable
- **Hydraulic and electrical solutions** that enable machines to deliver more productivity without wasting power
- **Aerospace solutions** that make aircraft lighter, safer and less costly to operate, and help airports operate more efficiently
- **Vehicle drivetrain and powertrain solutions** that deliver more power to cars, trucks and buses, while reducing fuel consumption and emissions

We provide integrated solutions that help make energy, in all its forms, more practical and accessible.

With 2013 sales of $22 billion, Eaton has approximately 100,000 employees around the world and sells products in more than 175 countries.

Eaton's electrical business

Eaton is a global leader with expertise in:

- Power distribution and circuit protection
- Backup power protection
- Solutions for harsh and hazardous environments
- Lighting and security
- Structural solutions and wiring devices
- Control and automation
- Engineering services

Eaton is positioned through its global solutions to answer today's most critical electrical power management challenges. With 100 years of electrical experience behind us, we're energized by the challenge of powering up a world that demands twice as much energy as today. We're anticipating needs, engineering products and creating solutions to energize our markets today and in the future.

We are dedicated to ensuring that reliable, efficient and safe power is available when it's needed most.

Eaton.com

Introduction

Eaton's B-Line Business operates out of a 50,000 square foot manufacturing and sales facility in Dammam, Saudi Arabia. At the time of the opening, the facility was reviewed by ARAMCO, which passed the Saudi oil company's detailed quality management assessments and Saudisation provisions. In conjunction with the facility's Aramco- approved status, B-Line has pledged to maintain at least 50% Saudi-employed workforce at the plant, a promise which supports the local job market.

B-Line continues to make investment in the region and in 2014 added roll-forming and additional capacity to the facility.

B-Line offers the region a broad line of cable support products, including aluminum, steel, and fiberglass cable ladder, as well as perforated and solid bottom cable tray. B-Line also provides its specification engineering services locally, providing both pre- and post-sale engineering and technical support to customers throughout the region. B-Line's presence in this area represents a continuation of the company's investment in the global oil and gas industry, adding the GCC countries to its global coverage area beyond offices in Korea, London, Calgary, and Houston.

مقدمة

تشغّل شركة إيتون بي لاين للأعمال مصنعًا تبلغ مساحته 50,000 قدم مربع في مدينة الدمام في المملكة العربية السعودية.

وعند افتتاحه، تمت مراجعة المنشأة من قبل شركة أرامكو، ونجح وفق شروط السعودة الموضوعة من قبل شركة النفط السعودية هذه. وبالترابط مع الموافقة من أرامكو، تعهّدت بي لاين بالإبقاء على نسبة ٥٠٪ من العاملين ليكونوا من السعوديين، وهو وعد يواكب سوق العمل المحلي.

وتواصل شركة بي لاين بالاستثمار في المنطقة حيث أضافت في عام 2014 قدرة تصنيع اللفائف وغيرها في المنشأة.

وتقدم بي لاين للمنطقة مجموعة عريضة من منتجات حوامل الكيابل، بما فيها المصنعة من الألمنيوم، الحديد، والفايبركلاس، وكذلك منتجات الحوامل المرنة المثقبة والصلبة. كما توفر بي لاين خدمات الاستشارات الهندسية محليًا، والخدمات الهندسية قبل وبعد المبيعات وكذا الدعم الفني للعملاء في المنطقة. وبذلك تمثل خطة بي لاين في المنطقة توسعًا لاستثمارات الشركة في صناعة النفط والغاز العالمية، مضيفة دول مجلس التعاون الخليجي إلى مناطق تغطيتها العالمية إلى جانب مكاتبها في كوريا، لندن، كالغاري، وهيوستن.

General Information ..... Inside Cover & i

Introduction GI-1
Table of Contents ..... GI-2 – GI-4
CoSPEC™ Specifier Center GI-5
Structural Steel Savings Information GI-6
Structural Steel Savings Key Product Attributes GI-7
Structural Steel Savings Support Recommendations ..... GI-8 – GI-11
Specifications & Approvals GI-12
Product Overview ..... GI-13 & GI-14

Cable Ladder Selection Process

Selection Process CLS-1
Material & Finish ..... CLS-2 – CLS-4
Corrosion ..... CLS-5 – CLS-6
Environmental Loads, Support Spans ..... CLS-7 – CLS-8
Thermal Contraction and Expansion CLS-9
Deflection CLS-10
Installation Considerations ..... CLS-11 & CLS-12
Load Capacity and Classes ..... CLS-13 & CLS-14

Perforated & Solid Cable Tray

General Information PS-2
Load Capacities & Weights PS-3
Cable Tray Straight Sections ..... PS-4 – PS-7
Cable Tray Accessories
Splice Plates, Blind Ends, Drop-Out, Cover Clamps,
Hold Down Clamps, Bonding Jumper, and Hardware ..... PS-8 – PS-10
Cable Tray Fittings ..... PS-11 – PS-22
Cable Tray Covers - Straight Section & Fitting ..... PS-23 & PS-24

Steel Cable Ladder Series 1

General Information LDS-2
Steel Cable Ladder Series 1 Straight Sections ..... LDS-3 & LDS-4
Steel Cable Ladder Series 1 Accessories
Splice Plates, Box Connectors, Blind Ends, Conduit to Ladder Adaptors,
Clamp/Guides, Ground Clamps, Bonding Jumper, Threaded Rod,
Rod Couplings, Hanger Rod Clamps, Drop-Out, Barriers ..... LDS-5 – LDS-8
Steel Cable Ladder Series 1 Covers & Cover Accessories ..... LDS-9 – LDS-11
Steel Cable Ladder Series 1 Fittings ..... LDS-12 – LDS-20

Slotted Steel Cable Ladder

General Information CL-2
Slotted Steel Cable Ladder Straight Sections ..... CL-3 & CL-4
Slotted Steel Cable Ladder Weights CL-5
Slotted Steel Cable Ladder Accessories
Splice Plates, Tee/Wall Connectors, Bonding Jumpers, Blind Ends,
Ladder Drop-Out, Threaded Rod, Rod Coulplings, Clamp/Guides,
Barriers, Clamp/Guides ..... CL-6 – CL-10
Slotted Steel Cable Ladder Fittings ..... CL-11 – CL-25
Slotted Steel Cable Ladder Covers & Cover Accessories ..... CL-26 – CL-28

Table of Contents

Aluminum Cable Ladder

NEMA 12B Aluminum Cable Ladder General Information AL-2
NEMA 12B Aluminum Cable Ladder Straight Sections AL-3
NEMA 12B Aluminum Cable Ladder Accessories
Splice Plates, Bonding Jumper, Clamp/Guides, Conduit to Ladder Adaptors, Ladder Drop-Out, Blind Ends, Box Connectors, Trapeze Support Kits, Barrier Strips ..... AL-4 – AL-6
NEMA 12B Aluminum Cable Ladder Covers & Accessories ..... AL-7 & AL-8
NEMA 12B Rated Aluminum Specification AL-9
NEMA 12B Rated Aluminum Cable Ladder Fittings ..... AL-10 – AL-21

Aluminum Cable Ladder Series 2, 3, & 4 General Information AL-24
Aluminum Cable Ladder Series 2, 3, & 4 Straight Sections ..... AL-25 – AL-32
Aluminum Cable Ladder Series 2, 3, & 4 Accessories
Splice Plates, Box Connectors, Blind Ends, Conduit to Ladder Adaptors, Ladder Drop-Outs, Barriers, Ground Clamps, Bonding Jumper, Hanger Rod Clamps, Clamp/Guides, Trapeze Kits, Brackets, Hold Down Brackets, and Beam Clamps ..... AL-33 – AL-44
Aluminum Cable Ladder Series 2, 3, & 4 Covers & Cover Accessories ..... AL-45 – AL-47
Cable Cleats AL-47
Aluminum Aluminum Cable Ladder Series 2, 3, & 4 Specification AL-48
Aluminum Cable Ladder Series 2, 3, & 4 Fittings ..... AL-49 – AL-64

Fiberglass Cable Tray & Cable Ladder

Fiberglass Perforated & Solid Cable Tray General Information GRP-2
Fiberglass Cable Tray Straight Sections ..... GRP-3 & GRP-4
Fiberglass Cable Tray Accessories
Splice Plates, Blind End Plates, Barriers, Hold Down Clamps & Accessory Hardware ..... GRP-5 & GRP-6
Fiberglass Cable Tray Fittings ..... GRP-7 – GRP-18
Fiberglass Cable Tray Covers & Cover Accessories ..... GRP-19 & GRP-20

Fiberglass Cable Ladder General Information GRP-22
Fiberglass Cable Ladder Straight Sections ..... GRP-23 – GRP-26
Fiberglass Cable Ladder Accessories
Splice Plates, Blind End Plates, Ladder Drop Out, Clamp/Guides, Hold Down Clamps, Conduit To Ladder Adaptor, Barriers, Resin Seal ..... GRP-27 – GRP-29
Fiberglass Cable Ladder Fittings ..... GRP-30 – GRP-41
Fiberglass Cable Ladder Covers & Cover Accessories ..... GRP-42 & GRP-43
Fiberglass Technical Data
Load Data, Corrosion Guide, Installation Guide ..... GRP-44 – GRP-47

Cable Cleats

Trefoil Cable Cleats CC-2
Single Cable Cleats CC-3
Selecting Cable Cleats ..... CC-4 & CC-5

Strut Support Systems

Introduction BF-2
Technical Data
- Materials, Finishes, Welding ..... BF-3 & BF-4
- Corrosion BF-5
- Design of Strut System ..... BF-6 & BF-7
- Recommended Specification BF-8
- Design Load Data BF-9

General Information BF-10
Channels & Loading ..... BF-11 – BF-18
Hardware
- Channel Nuts, Combo Nut Washer, Buzznut™, Closure Strips, End Caps, Hardware ..... BF-19 – BF-22

Strut Fittings
- Flat Fittings, Angle Fittings, Brackets, Post Bases, Beam Clamps ..... BF-23 – BF-26

Index

Part Number Index ..... IND-1 – IND-23

Miscellaneous

Metric Conversion Charts MIS-1
Bottom Design Options MIS-2

CoSPEC™ Specifier Center

CoSPEC Specifier Center is designed to help you easily SELECT, VIEW and DOWNLOAD B-Line product design content in any one of nearly one hundred non-proprietary and proprietary CAD, BIM, PDMS, and graphics formats, which helps speed the integration of the content into your design project. For more information, visit www.cooperbline.com/cospec.

Features

- Easy integration and configuration
- Comprehensive library of 2D drawings and 3D models for CAD, BIM, PDMS, SP3D, and graphics output
- The most up to date software versions and product data information are always available
- Submittals and specification sheets in PDF format
- Proprietary file format outputs are native to the chosen software

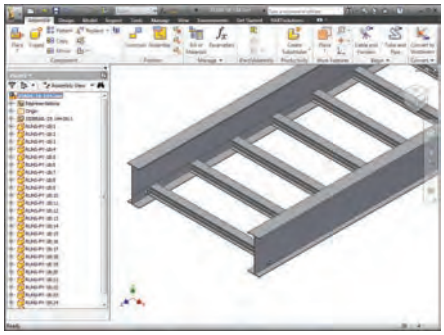

Nearly a Hundred Download Options

- Aveva PDMS and Intergraph SmartPlant SP3D (on select products) content
- Autodesk Revit output available
- Proprietary formats from AutoCAD to SolidWorks to Catia
- Non-proprietary formats like DXF and STEP, and more
- Graphics files in a number of formats including EPS

2D Native

- Allplan 2008
- AutoCAD >=V14
- Cadkey CDL >=V19
- Catia IUA - V4
- HP ME 10 >=V9
- Medusa >=2000i
- Microstation (DGN) >=V8
- SolidEdge >=V17
- VX (Varimetrix) >=V5.0

2D Neutral & Graphics

- BMP (2D & 3D View)
- DWF-ASCII 5.5, Binary 5.5 and Compressed 5.5
- DWG >=V14
- DXF-V12\HPGL-V2
- IGES >=V5.0
- JPEG (2D & 3D Views)
- Metafile 2D-V1, & PS2-V2
- MI >=V8
- PDF Datasheet
- Postscript EPS
- SVG
- TIFF (2D & 3D View)

3D Native

- Autodesk 3D Studio MAX
- Allplan = 2008
- AutoCAD >=V14
- AVEVA PDMS/Marine (Equipment Spec)
- Caddy++ via SAT-V4.2
- Catis >=V5 R8 and IUA-V4
- EMS
- Google SketchUp
- Autodesk Inventor >=R5.3, R10, R11
- Mechanical Desktop >=V5
- Nupas/Cadmatic
- One Space Modeling >=2007
- Pro/E Wildfire >=I
- PRO-Desktop
- Autodesk Revit >= 2009* (coming soon)
- SolidEdge >=V17
- SolidWorks >=2001+
- Think3 >=2006.2
- Tribon M3
- Unigraphics >=NX3
- VX (Varimetrix) >=V5

3D Neutral

- CIP
- DWG >=V14
- DXF V14
- IGES
- JT
- Metafile 3D (PS3)-V2
- Parasolid-Binary V15 and Text V15
- PDF 3D-7.01
- SAT - V2.0 through V6.0
- STEP-AP203, AP215a & AP214b
- STL
- U3D (Universal 3D)
- VRML >=V1.0
- XGL

Select

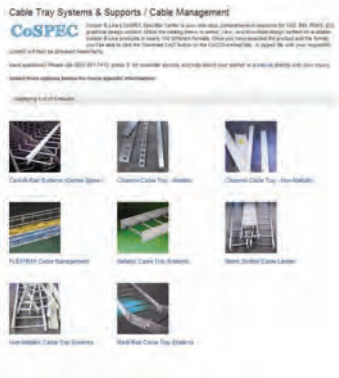

View

Download

Reduce Structural Steel Supports

With B-Line cable ladder systems, you can reduce the number of structural steel supports by as much as 66%, all while meeting or exceeding global industry standards.

Resources

By visiting www.cooperbline.com/sss, you can access our library of resources available that demonstrate the ways a B-Line cable ladder system can help reduce engineering complexity and costs. These resources include:

- **Video:** Five minute video showing our key features and support recommendations
- **Support recommendations:** Submittal drawings showing where supports are recommended to be placed
- **Test reports:** Detailed reports highlighting our products' load testing performance in our engineering laboratories
- **Calculator:** A cost savings calculator that estimates potential savings based on user-entered variables

For Steel & Aluminum Cable Ladder

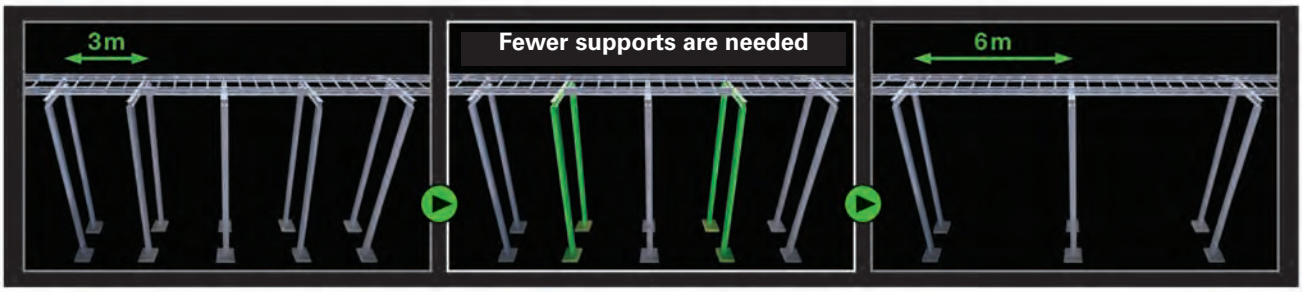

For Aluminum Cable Ladder

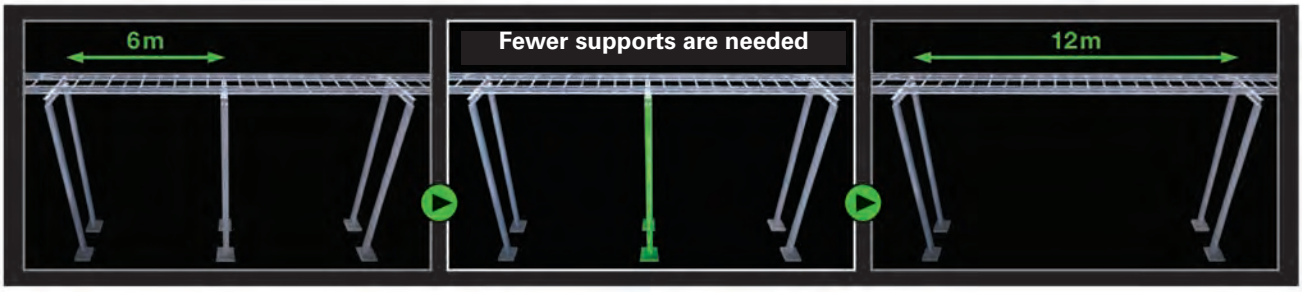

Structural Steel Savings

5 Key Product Attributes

I-Beam Side-Rail Design

I-Beam Design Can Carry up to 2.3 Times More Load than C-Channel

- Maximizes stiffness
- Offers positive rung support
- Enhances clamping options
- Carries load on longer spans, reducing support requirements

Application - Specific Materials

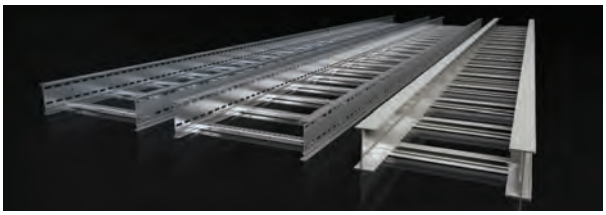

Application Specific Materials Maximize Options

- Hot-dip galvanized steel
- 316 Stainless Steel
- Marine-grade, copper-free aluminum
- Ensures the best material for the application to carry the load over the longest span

Splice Plate Design

Splice Plates Enhance Structural Integrity

- Enhances the structural integrity and strength of the system, reducing support requirements
- UL Classified as an equipment grounding conductor, eliminating bonding jumpers

Application - Specific Specialty Splices

Specialty Splice Plates Allow Load Transfer

- Patent-pending design
- Designed for thermal expansion and contraction
- Structural integration maintains load carrying capacity, reducing support requirements

Fitting Designs

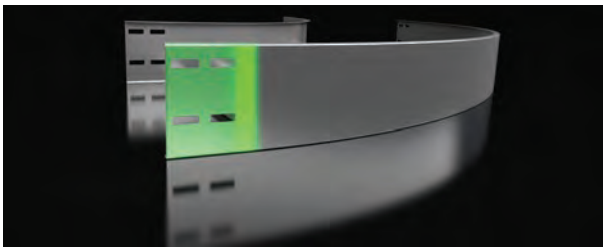

75m or 100mm Tangents

- Industry-leading 75mm to 100mm tangents
- Maximizes strength and load carrying capacity, reducing support requirements

Support Recommendations
Horizontal Bends

NEMA Standard
900mm (36”) Max Radii

- Attached ladder supported within 600mm of splice
- Fittings supported at radius center pont on both sides
- Three total supports recommended per fitting

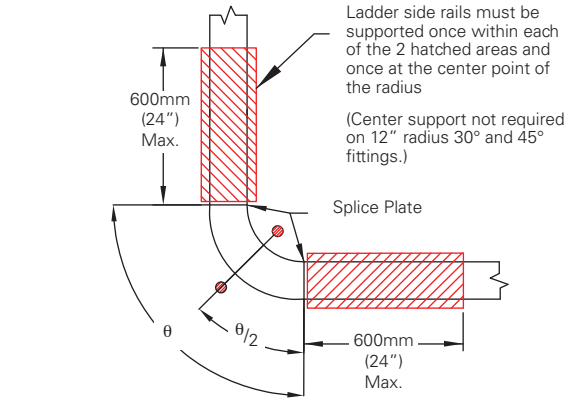

θ = 30°, 45°, 60°, 90°

B-Line Recommendations

Option 1
900mm (36”) Max Radii

- Attached ladder supported up to half span (3000mm max)
- Fittings supported within 30° of radius center point on both sides
- One support recommended per fitting with flexibility for placement and distance on ladder supports

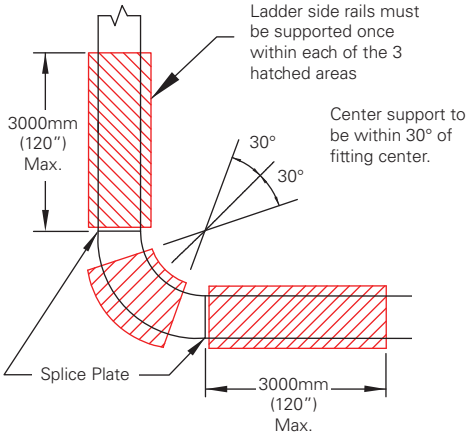

Option 1
900mm (36”) Max Radii

- Attached ladder supported within 600mm of splice
- Fitting support is eliminated
- Two total supports recommended per fitting

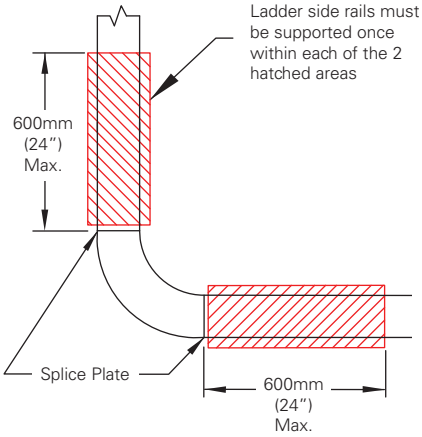

Structural Steel Savings

Support Recommendations Horizontal Tees

NEMA Standard 900mm (36”) Max Radii

- Attached ladder supported within 600mm of splice
- Fittings supported once on each side rail
- Six total supports recommended per fitting

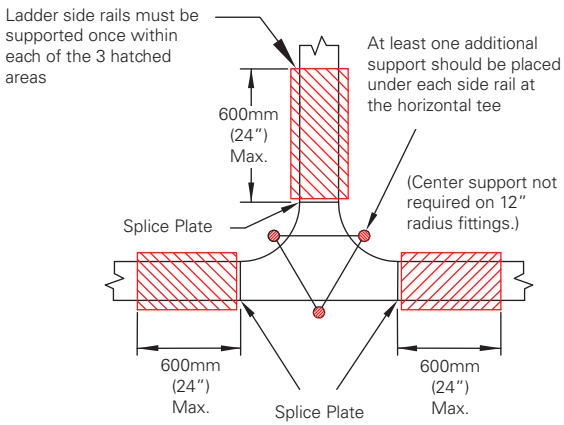

B-Line Recommendations

Option 1 900mm (36”) Max Radii

- Attached ladder supported up to half span (3000mm max)
- Fittings supported twice within defined area
- Two supports recommended per fitting with flexibility for placement and distance on ladder supports

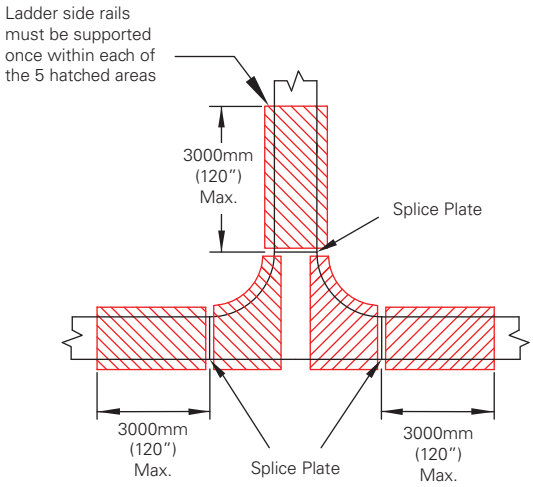

Option 2 900mm (36”) Max Radii

- Attached ladder supported within 600mm of splice
- Fitting supports are eliminated
- Three total supports recommended per fitting

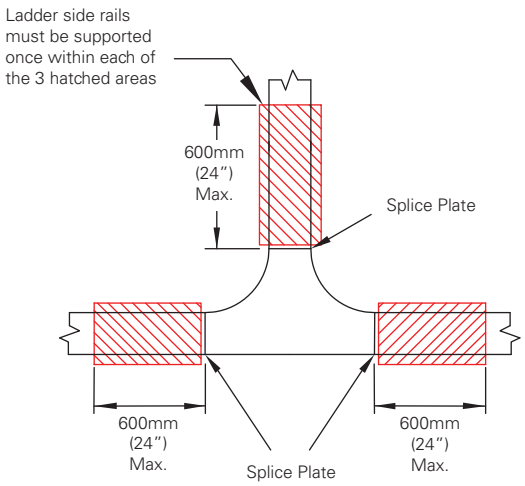

Support Recommendations Horizontal Crosses

NEMA Standard 900mm (36”) Max Radii

- Attached ladder supported within 600mm of splice
- Fittings supported once on each side rail
- Eight total supports recommended per fitting

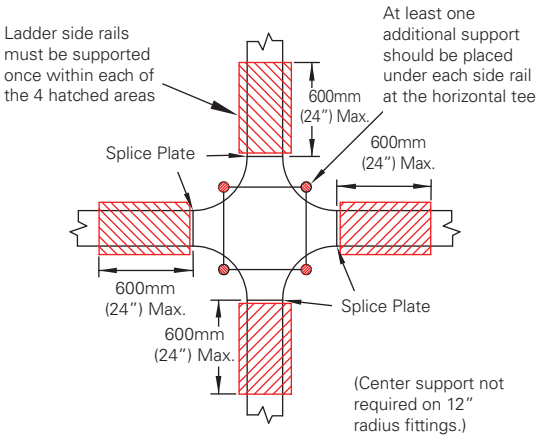

B-Line Recommendations

Options 1 & 2 900mm (36”) Max Radii

- Attached ladder supported up to half span (3000mm max)
- Fitting supported twice within defined area
- Two supports recommended per fitting with flexibility for placement and distance on ladder supports

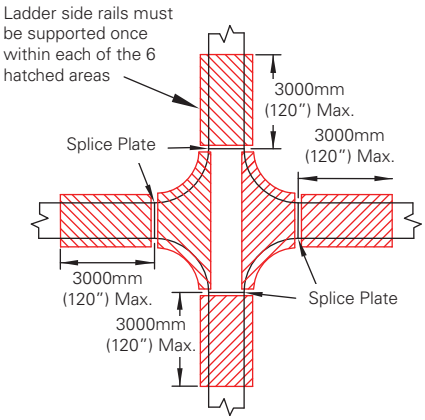

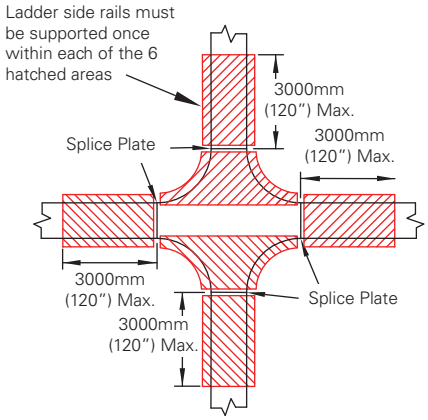

Option 3 900mm (36”) Max Radii

- Attached ladder supported within 600mm of splice
- Fitting supports are eliminated
- Four total supports recommended per fitting

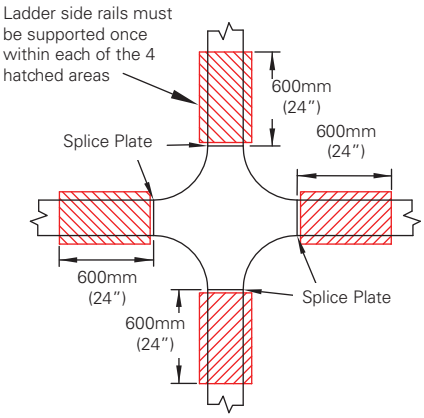

Structural Steel Savings

Support Recommendations
Vertical Inside/Outside Bends

NEMA Standard
900mm (36”) Max Radii

- Attached ladder supported within 600mm of splice
- Fittings supported Twice on each side rail
- Three total supports recommended per fitting

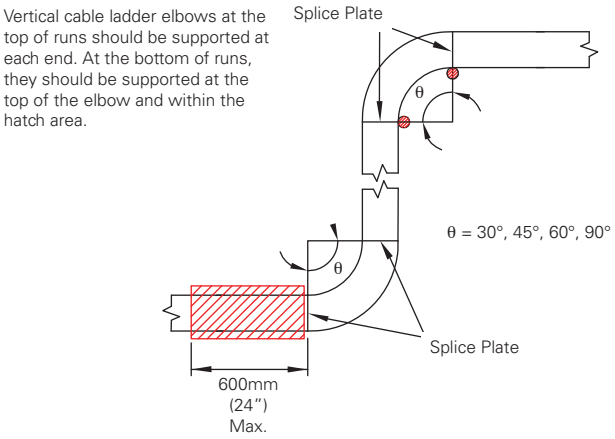

B-Line Recommendations

Options 1 & 2
900mm (36”) Max Radii

- Attached ladder supported up to half span (3000mm max)
- Fitting supported once on each side rail
- One total support recommended per fitting with flexibility for placement and distance on ladder supports

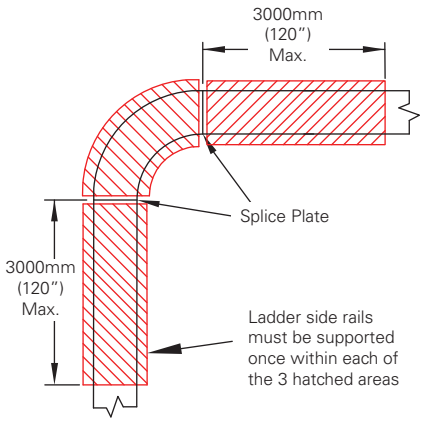

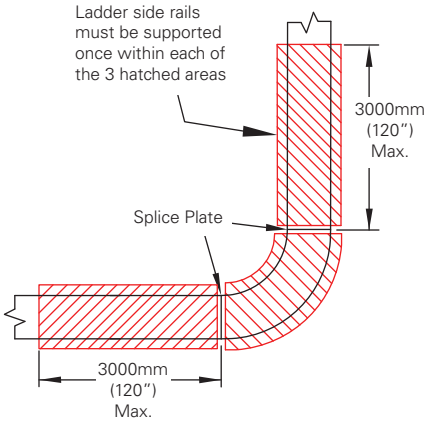

Option 3
900mm (36”) Max Radii

- Attached ladder supported within 300mm of splice and a maxjmum of 3000mm straight section in the transition between the fittings
- Fitting supports once on eachside rail
- One total support recommended per fitting with flexibility for placement and distance on ladder supports

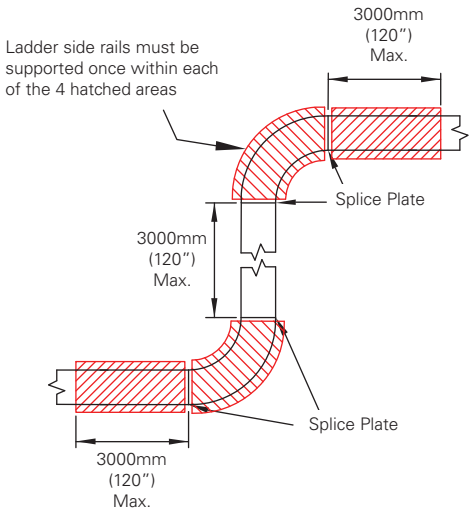

B-Line's Dammam facility is ISO Certified to ISO 9001:2008 by UKAS

Cable Ladder and Tray products are UL Classified as noted

Load tests for GRP Cable Ladder and Cable Tray, Metallic Cable Tray, and Metallic Cable Ladder products shown in this catalog have been witnessed by Det Norske Veritas (DNV)

AL HOTY

Cable Ladder and Pan Cable Tray products shown in this catalog have been tested and witnessed by Al Hoty. Documentation is available upon request.

Cable Ladder shown in this catalog conforms to the requirements of IEC Standard 61537, 2001 Ed.

Cable Ladder products shown in this catalog are CSA Classified as noted

HPL, SDL, and HDL steel ladder and aluminum ladder designs shown in this catalog are approved by the American Bureau of Shipping.

Eaton's B-Line Business is a member of the Cable Tray Institute (CTI)

Eaton's B-Line Business is a member of the National Electrical Manufacturer's Association (NEMA)

المواصفات والموافقات

مصنع بي لاين الدمام حاصل على شهادة الآيزو 9001:2008 من قبل يوكاس

جميع حوامل الكيابل والحوامل المرنة الموجودة ضمن هذا الكتالوج مصنفة ضمن "يو ال"

تمت الشهادة على اختبارات التحميل لحوامل الكيابل جي آر بي والحوامل المرنة، والحوامل المرنة المعدنية، ومنتجات والحوامل المرنة المعدنية في هذا الكتالوج من قبل "ديت نورسك فيريتاس (دي ان في)"

AL HOTY

إن جميع المنتجات الموجودة هنا في الكتالوج قد اختبرت من قبل شركة الحوطي وأصدرت شهادات معتمدة ويمكن الحصول على تلك الشهادات عند الطلب.

جميع حوامل الكيابل والحوامل المرنة الموجودة في هذا الكتالوج مصنفة ضمن IEC للقياسات نسخة رقم ٦١٥٣٧، ٢٠٠١.

جميع حوامل الكيابل والحوامل المرنة الموجودة في هذا الكتالوج مصنفة ضمن CSA

تصاميم SDL، HPL، وHDL للحوامل الحديدية المبينة في هذا الكتالوج معتمدة من قبل المكتب الأمريكي للشحن البحري.

شركة إيتون بي لاين للأعمال عضو في معهد حوال الكيابل CTI

شركة إيتون بي لاين للأعمال عضو في جمعية المصنع الوطني للكهرباء NEMA

Product Overview

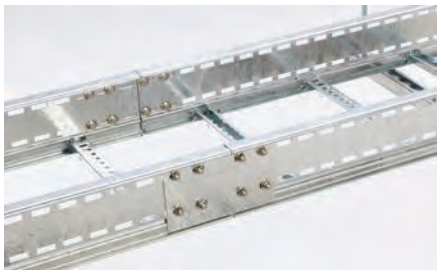

Steel Cable Ladder

Light duty steel cable ladders are designed with a top flange for stiffness and a bottom flange to support rungs securely. Heavier duty ladders utilize the B-Line I-Beam siderail profile, the strongest available siderail shape. The I-Beam provides more strength using less material than C-shaped siderails. The added strength means that the ladders are lighter and easier to install. Rungs for all cable ladders support a 200 lbs. concentrated load beyond the cataloged cable load.

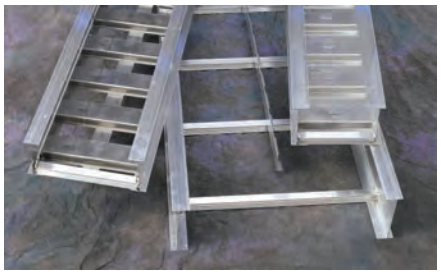

Aluminum Cable Ladder

Ideal for onshore and offshore applications, B-Line aluminum cable ladders are manufactured from marine-grade aluminum. Similar to the steel cable ladders, aluminum cable ladders include the I-Beam siderail for added strength. Options are available to minimize the number of supports required for the ladder, including mid-span splice plates and extra-long lengths.

Fiberglass Cable Ladder & Tray

B-Line's GRP ladder offering is a non-metallic cable management system that is ideal for harsh environments. The material is also lightweight, corrosion resistant, and treated with surface veil for UV resistance. Rungs are both mechanically attached and bonded with adhesive for a secure connection.

Perforated & Solid Bottom Cable Tray

B-Line Perforated and Solid Bottom Cable Tray provides a continuous bottom surface, allowing for constant cable support with no cable sag. Radiused cable fittings allow the cables to adhere to cable manufacturer's bend recommendations. An inside or outside flange on top of the tray provides added strength.

Cable Cleats

B-Line cable cleats are designed to support and retain your cables within your cable tray system in everyday conditions. More importantly, they help prevent damage in short circuit conditions. Cable cleats are one of the first lines of defense to help protect your personnel, your cables, and your cable ladder and tray systems.

Strut Support Systems

B-Line bolted framing is engineered to provide structural support in any environment. A wide variety of finishes, configurations, and fittings meet any construction need. B-Line bolted framing works is conjunction with B-line ladder tray as a preferred method of cable support.

نظرة عامة على المنتج

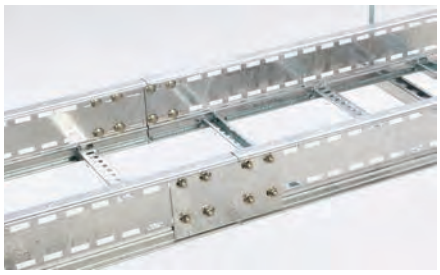

الحوامل الحديدية للكيابل

الحوامل الحديدية للأعمال الخفيفة مصممة من شفاه علوية لصلابة أكثر وشفاه سفلية لدعم سلالم الدرج بمكانها. أما الحوامل الحديدية للأعمال الثقيلة فتستمد قوتها من التصميم المميز لشركة بي لاين على صيغة I-Beam التي تعطي صلابة أكثر مع استخدام مواد أقل ليجعلها أخف وأمتن من مثيلاتها التقليدية ذات الشكل C. والصلابة الأكبر تعني أن الحوامل أخف وأسهل للتركيب. فدرجات جميع حوامل الكيابل تتحمل وزن 200 باوند من الحمل المركز أكثر من حمل الكيابل المذكور في الكاتالوج.

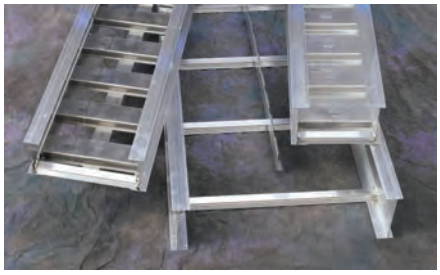

حوامل الكيابل الألمنيومية

تعتبر مثالية في الأماكن داخل البحر وخارجه لصناعة النفط والغاز، حيث أن حوامل بي لاين الألمنيومية مصنعة من درجات الألمنيوم البحرية. وكما هو الحال في حوامل الكيابل الحديدية، فإن الحوامل الأمنيومية مصنعة على شكل I-Beam لحوافها وذلك لإعطائها صلابة وخفة أكثر. كما إن هناك خيارات تتيح التقليل من عدد الدواعم المطلوبة للحامل، بما في ذلك المساندات لتحمل أكبر وأطوال إضافية.

حوامل الكيابل والمرنة المصنعة من الفايبر كلاس

شركة بي لاين توفر أنظمة إدارة لحوامل غير معدنية للكيابل والتي تعتبر مثالية للأماكن الحارة وصعبة الأجواء. كما إن المواد خفيفة الوزن، وتتحمل وتقاوم عوامل الصدأ، وقد عولجت بمواد لمقاومة أشعة الشمس فوق البنفسجية. كما إن درجات الحوامل مربوطة وملحومة ميكانيكيًا بمادة لاصقة شديدة القوة.

حوامل الكيابل المثقبة والصلبة

حوامل الكيابل المثقبة والصلبة من شركة بي لاين توفر سطحًا معدنيًا متواصلًا، ما يتيح لمساندة دعم الكيابل دون تبلدها. كما توفر عددًا من التجهيزات لملاءمة ثني الكيابل بسهولة لتتلاءم مع مستوى توصيات المصنّع. ووجود الشفاه الداخلية والخارجية على قمة الحوامل يوفر قوة إضافية.

مرابط الكيابل

مرابط الكيابل من شركة بي لاين مصممة لدعم الكيابل والمحافظة عليها ضمن نظام الحوامل في جميع الظروف. والأهم أنها تساعد في الوقاية من التلف في حالة المماس الكهربائي. إن المرابط تعتبر العامل الأساس في حماية البشر والكيابل وحوامل الكيابل وأنظمتها.

أنظمة دعم الأعمدة

تمت هندسة الحواف المصومة في شركة بي لاين لتوفير دعم هيكلي في جميع البيئات. وهناك مجموعة متنوعة من التشطيبات، والتوليفات والحشيات التي تستوفي أي احتياجات بناء. تعمل الحواف المصومة في شركة بي لاين بالتداخل مع حوامل الكيابل من بي لاين كأسلوب مفضل لدعم الكيابل.

Metric Cable Ladder Technical Guide

The technical data contained within this guide is intended to help provide adequate information to design and specify an efficient and robust cable ladder system. B-Line recommends the following subjects when designing the cable ladder system which are detailed within the corresponding sections of this guide:

1. Side Rail and Rung Design
2. Materials
3. Finish
4. Corrosion
5. Load Performance Type Tests
6. Environmental Loads
7. Impact
8. Electrical Continuity
9. Free Base Area
10. Thermal Contraction and Expansion
11. Support and Installation Recommendations
12. Cable Restraint

1. Side Rail and Rung Design

B-Line cable ladder side rail uses a high performance rolled I-Beam profile. The more complex the structural profile, the higher the strength yielded by the profile. The rolled I-Beam profile provides greater performance than standard C-section and complex C-section profiles commonly used in cable ladder designs. Due to the higher performance provided by the I-Beam, it allows for a reduced material thickness, helping reduce product weight.

The slotted side rail is designed to provide equally spaced slots along the entire length. These allow the installer to field cut and modify to standard length; and then connect new lengths and/or fittings with a standard splice plate without on-site drilling. The slots also allow the designer and installer to attach additional accessories and equipment, again without the need to drill the cable ladder. In addition, the slots result in a lighter weight ladder with increased ventilation.

2. Materials

MATERIAL	STANDARD	GRADE
Steel	BS EN 10025-2 : 2004	S275 or equivalent
Aluminum	The Aluminum Association	6063-T6 (Side Rails, Rungs, and Splice plates) 5052-H32 (Bottoms, Covers, and Accessories)
Stainless Steel	BS EN 10088-2 : 2005	1.4404 (AISI 316)

Steel Grade S275:

B-Line cable ladder is manufactured from continuously roll formed Grade S275 structural steel or equivalent. Use of a structural grade steel means the material will meet the minimum structural and chemical properties specified in the BS EN 10025-2 : 2004 standard.

Steel Grade S275:

Typical Chemical Composition

Name	Number	Deoxidation Method	C % For thickness range			Si max	Mn max	P max	S max	N max	Cu max	Other
			=< 16	> 16 =<40	>40	%	%	%	%	%	%	%
S275	1.0145	FF	0,21	0,21	0,21	-	1,6	0,035	0,035	-	0,60	-

Typical Mechanical Properties

Name	Number	ReH Minimum Yield strength (MPa) for nominal thickness(mm)									R m (MPa) for nominal thickness (mm)				
		<16	≥16 ≤40	>40 ≤63	>63 ≤80	>80 ≤100	>100 ≤150	>150 ≤200	>200 ≤250	>250 ≤400	<3	≥3 ≤100	>100 ≤150	>150 ≤250	>250 ≤400
S275	1.0145	275	265	255	245	235	225	215	205	195	430-580	410-560	400-540	380-540	380-540

Aluminum

Aluminum cable ladders are fabricated from marine grade, "copper free" extrusions. Aluminum's excellent corrosion resistance comes from its ability to form an aluminum oxide film when scratched or cut. This film re-forms whenever damaged. This property also grants excellent resistance to "weathering" from outdoor applications. Due to its light weight, relative to steel, aluminum possesses one of the best strength to weight ratios amoung alloys used for cable support systems.

These properties have made Aluminum the ideal choice for industrial plants around the world. The resistance to chemicals, indoor and outdoor, can best be determined by tests conducted by the user with exposure to the specific conditions for which it is intended. For further information, contact your local B-Line representative or the Aluminum Association.

For information on common chemicals which aluminum resists, see pages CLS-5 & CLS-6.

Stainless Steel Grade 1.4404 (AISI 316L):

B-Line cable ladder is manufactured from continuously roll formed Grade 1.4404 (AISI 316L) stainless steel. Grade 1.4404 is a non-magnetic stainless steel and part of the "austenitic" group of stainless steels. It is designed to withstand corrosive atmospheres, low and high ambient and operating temperatures. Grade 1.4404 is a superior grade of stainless steel due to it containing molybdenum. This enhances its resistance to corrosion and makes it appropriate for use in marine salt laden saliferous environments. The importance of using Grade 1.4404 (AISI 316L) relates to the corrosion resistance of the steel after welding. Stainless steel resists corrosion because it forms an impervious passive oxide layer on its surface which forms when oxygen is present. When stainless steel is welded, it may lead to a chromium carbide to precipitate at the grain boundaries, depleting the chromium within the austenite and preventing the passive oxide layer from forming. Due to the grain boundaries being small and highly anodic, a rapid corrosion can occur. This process can be prevented by using stainless steels with a carbon content of less than 0.03%. Grade 1.4044 typically has less than 0.03% carbon content.

There are a number of important factors that can make the use of stainless steel imperative. These factors can include long term maintenance costs, corrosion resistance, aesthetic appearance, and ambient operating temperature. Grade 1.4404 stainless steel exhibits stable structural properties such as yield strength and high creep strength at lowered and elevated ambient operating temperatures.

B-Line cable ladder is welded using a stainless steel welding wire to help ensure each weldment exhibits the same corrosion resistance as the base metal. Localized staining in the weld area/heat effected zone may occur when exposed to severe corrosive environments. The shielding gases and low carbon materials used in our welding processes minimize carbon contamination during welding to reduce staining and stress corrosion.

Stainless Steel Grade 1.4404 (AISI 316L):

Typical Chemical Composition

Name	Number	C	Si	Mn	P max.	S	N	Cr	Cu	Mo	Nb	Ni	Others
Standard Grades													
X2CrNiMo17-12-2	1.4404	≤0,030	≤1,00	≤2,00	0,045	≤0,015	≤0,11	16,5-18,5	-	2,00-2,50	-	10,0-13,0	-

Austenitic steels in solution annealed condition

Typical Mechanical Properties

Name	Number	Product Form	Thickness max mm	$R_{p0,2}$ MPa	R_m MPa	A %
Standard Grades						
X2CrNiMo17-12-2	1.4404	C	8	240	530-680	40
		H	13,5	220	530-680	40
		P	75	220	520-670	45
		H	13,5	220	530-730	35
		P	75	220	520-720	35

3. Finish

Zinc Coatings

Zinc protects steel in two ways. First, it protects the steel as a coating and second as a sacrificial anode to repair bare areas such as cut edges, scratches, and gouges. The corrosion protection of zinc is directly related to its thickness and the environment. This means a .2 mil coating will last twice as long as a .1 mil coating in the same environment.

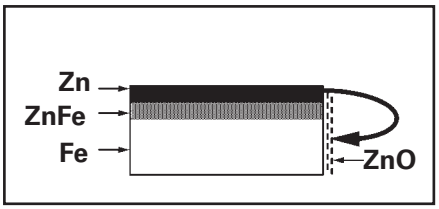

Galvanizing also protects cut and drilled edges.

Hot Dip Galvanized "After Fabrication"
(Hot dip galvanized or batch hot dip galvanized)

Hot Dip Galvanized "After Fabrication" cable ladder products are fabricated from steel and then completely immersed in a bath of molten zinc. A metallic bond occurs resulting in a zinc coating that completely coats all surfaces, including edges and welds.

Another advantage of this method is coating thickness. Cable ladders that are hot dip galvanized after fabrication provide an average minimum zinc coating thickness in accordance with BS EN ISO 1461.

The zinc thickness is controlled by the amount of time each part is immersed in the molten zinc bath; as well as the speed at which it is removed. The term "double dipping" refers to parts too large to fit into the galvanizing kettle and; therefore, must be dipped one end at a time. It does not refer to extra coating thickness.

The layer of zinc which bonds to steel provides a dual protection against corrosion. It helps protect first as an overall barrier coating. If this coating happens to be scratched or gouged, zinc's secondary defense is called upon to protect the steel by galvanic action.

Hot dip galvanizing after fabrication is recommended for prolonged outdoor exposure and will help protect steel for many years in most outdoor environments and in many aggressive industrial environments.

4. Corrosion

IEC 61537 : 2006 section 6.5.2, Table 1 "classification for resistance against corrosion" defines the classification class of various materials and finishes used in the manufacture and supply of cable ladder systems against resistance to corrosion.

In accordance with this classification table, B-Line cable ladder can be supplied to meet the following classifications:

Steel HDG : Class 6

Stainless Steel 1.4404 : Class 9B

Stainless Steel 1.4404 : Class 9D

Corrosion Guide

Chemical	Cable Ladder Material								
	Aluminum			Stainless Type 304			Stainless Type 316		
	Cold	Warm	Hot	Cold	Warm	Hot	Cold	Warm	Hot
Acteone R	R	R	R	R	R	R	R	R	
Aluminum Chloride Solution	NR	NR	NR	NR	--	--	F	--	--
Anhydrous Aluminum Chloride	R	R	R	NR	--	--	F	--	--
Aluminum Sulfate	R	R	R	R	R	R	R	R	R
Ammonium Chloride 10%	F	F	NR	R	R	R	R	R	R
Ammonium Hydroxide	F	F	F	R	R	R	R	R	R
Ammonium Phosphate	F	F	NR	R	--	--	R	--	--
Ammonium Sulfate	F	--	--	R	R	R	R	R	R
Ammonium Thiocyanate	R	R	R	R	--	--	R	R	R
Amyl Acetate	R	R	R	R	R	R	R	R	R
Amyl Alcohol	R	R	R	R	--	--	R	R	R
Arsenic Acid	F	F	F	R	R	--	R	R	R
Barium Chloride	F	F	NR	R	R	R	R	R	R
Barium Sulfate	R	R	R	R	R	--	R	R	--
Barium Sulfide	NR	NR	NR	R	R	--	R	R	--
Benzene R	R	R	R	R	R	R	R	R	
Benzoic Acid	F	F	NR	R	R	R	R	R	R
Boric Acid	R	R	F	R	R	R	R	R	R
Bromine Liquid or Vapor	NR	NR	NR	NR	NR	NR	NR	NR	NR
Butyl Acetate	R	R	R	R	--	--	R	R	R
Butyl Alcohol	R	R	R	R	R	R	R	R	R
Butyric Acid	F	F	F	R	R	R	R	R	R
Calcium Chloride 20%	F	F	NR	R	--	--	R	--	--
Calcium Hydroxide	N	--	--	R	R	F	R	R	R
Calcium Hypochlorite 2 - 3%	F	--	--	R	--	--	R	--	--
Calcium Sulfate	R	R	--	R	R	--	R	R	--
Carbon Monoxide Gas	R	R	R	R	R	R	R	R	R
Carbon Tetrachloride	F	F	NR	F	F	F	R	R	R
Chloroform Dry	R	NR	NR	R	R	--	R	R	--
Chloroform Solution	R	NR	NR	--	--	--	--	--	--
Chromic Acid 10% CP	R	R	--	R	R	F	R	R	R
Citric Acid	F	F	F	R	R	NR	R	R	R
Copper Cyanide	NR	NR	NR	R	R	R	R	R	R
Copper Sulfate 5%	NR	NR	NR	R	R	R	R	R	R
Ethyl Alcohol	R	R	R	R	R	R	R	R	R
Ethylene Glycol	R	R	F	R	R	--	R	R	R
Ferric Chloride	NR	NR	NR	NR	NR	NR	NR	NR	NR
Ferrous Sulfate 10%	R	NR	NR	R	R	--	R	R	--
Formaldehyde 37%	R	R	R	R	R	R	R	R	R
Formic Acid 10%	R	R	--	R	R	NR	R	R	R
Gallic Acid 5%	R	R	NR	R	R	R	R	R	R
Hydrochloride Acid 25%	NR	NR	NR	NR	NR	NR	NR	NR	NR
Hydrofluoric Acid 10%	NR	NR	NR	NR	NR	NR	NR	NR	NR
Hydrogen Peroxide 30%	R	R	R	R	R	R	R	R	R
Hydrogen Sulfide Wet	R	--	--	NR	NR	NR	R	R	R

R = Recommended
F = May be used under some conditions
NR = Not Recommended
-- = Information not available

The corrosion data given in this table is for general comparison only. (Reference Corrosion Resistance Tables, Second Edition)

The presence of contaminates in chemical environments can greatly affect the corrosion rate of any material.

B-Line strongly suggests that field service tests or simulated laboratory tests using actual environmental conditions be conducted in order to determine the proper materials and finishes to be selected.

For questionable environments see Fiberglass Cable Ladder Corrosion Guide (Pages GRP-45 & GRP-46).

Cold = 50 - 80°F Warm = 130 - 170°F Hot = 200 - 212°F

Corrosion Guide

Chemical	Cable Ladder Material								
	Aluminum			Stainless Type 304			Stainless Type 316		
	Cold	Warm	Hot	Cold	Warm	Hot	Cold	Warm	Hot
Lactic Acid 10%	R	F	NR	R	R	F	R	R	R
Lead Acetate 5%	NR	NR	NR	R	R	R	R	R	R
Magnesium Chloride 1%	NR	NR	NR	R	--	F	R	--	R
Magnesium Hydroxide	R	R	R	R	R	--	R	R	--
Magnesium Nitrate 5%	R	--	--	R	R	R	R	R	R
Nickel Chloride	NR	NR	NR	R	--	--	R	--	--
Nitric Acid 15%	NR	NR	NR	R	R	R	R	R	R
Oleic Acid	R	R	F	R	R	F	R	R	R
Oxalic Acid 10%	R	F	NR	NR	NR	NR	R	R	R
Phenol CP	R	R	R	R	R	R	R	R	R
Phosphoric Acid 50%	NR	NR	NR	R	R	R	R	F	NR
Potassium Bromide 100%	R	F	NR	R	R	--	R	R	R
Potassium Carbonate 100%	F	F	--	R	R	R	R	R	R
Potassium Chloride 5%	R	R	R	R	R	R	R	R	R
Potassium Dichromate	R	R	R	R	R	R	R	R	R
Potassium Hydroxide 50%	NR	NR	NR	R	R	R	R	R	R
Potassium Nitrate 50%	R	R	R	R	R	R	R	R	R
Potassium Sulfate 5%	R	R	R	R	R	R	R	R	R
Propyl Alcohol	R	R	R	R	R	R	R	R	R
Sodium Acetate 20%	R	F	F	R	R	R	R	R	R
Sodium Bisulfate 10%	R	F	F	R	R	R	R	R	R
Sodium Borate	R	F	F	R	R	R	R	R	R
Sodium Carbonate 18%	R	F	F	R	R	R	R	R	R
Sodium Chloride 5%	R	NR	NR	R	R	R	R	R	R
Sodium Hydroxide 50%	NR	NR	NR	R	R	R	R	R	R
Sodium Hypochlorite 5%	R	F	F	F	--	--	R	--	--
Sodium Nitrate 100%	R	R	R	R	R	R	R	R	R
Sodium Nitrite 100%	R	R	R	R	R	R	R	R	R
Sodium Sulfate 100%	R	R	F	R	R	R	R	R	R
Sodium Thiosulfate	R	R	R	R	R	R	R	R	R
Sulfur Dioxide (Dry)	R	R	R	R	R	R	R	R	R
Sulfuric Acid 5%	NR	NR	--	F	NR	NR	R	--	--
Sulfuric Acid 10%	NR	NR	NR	NR	NR	NR	NR	NR	NR
Sulfuric Acid 50%	NR	NR	NR	NR	NR	NR	NR	NR	NR
Sulfuric Acid 75 - 98%	NR	NR	NR	NR	NR	NR	NR	NR	NR
Sulfuric Acid 98 - 100%	NR	NR	--	R	--	--	R	R	F
Tannic Acid 10 & 50%	NR	NR	NR	R	R	R	R	R	R
Tartaric Acid 10 & 50%	F	NR	NR	R	R	R	R	R	R
Vinegar F	F	F	R	R	R	R	R	R	
Zinc Chloride 5 & 20%	F	NR	NR	R	F	NR	R	R	R
Zinc Nitrate	F	NR	NR	R	R	R	R	R	R
Zinc Sulfate	F	NR	NR	R	R	R	R	R	R

R = Recommended
F = May be used under some conditions
NR = Not Recommended
-- = Information not available

The corrosion data given in this table is for general comparison only. (Reference Corrosion Resistance Tables, Second Edition)

The presence of contaminates in chemical environments can greatly affect the corrosion rate of any material.

B-Line strongly suggests that field service tests or simulated laboratory tests using actual environmental conditions be conducted in order to determine the proper materials and finishes to be selected.

For questionable environments see Fiberglass Cable Ladder Corrosion Guide (Pages GRP-45 & GRP-46).

Cold = 50 - 80°F Warm = 130 - 170°F Hot = 200 - 212°F

5. Load Performance Type Tests

B-Line cable ladder has been performance load tested in full compliance with the requirements of IEC 61537 : 2006 standard titled "Cable Management – Cable Tray Systems and Cable Ladder Systems"; as well as NEMA VE 1 Test Method A; and load and deflection results published within this catalog are based upon these tests. IEC load tests have been witnessed by DNV independent third party inspectorates.

We recommend that the specifying engineer insists upon third part certificates confirming compliance to the IEC or NEMA standard and published load tables within the manufacturer's catalog. B-Line has tested its cable ladder to the following tests procedures

Type Test - II

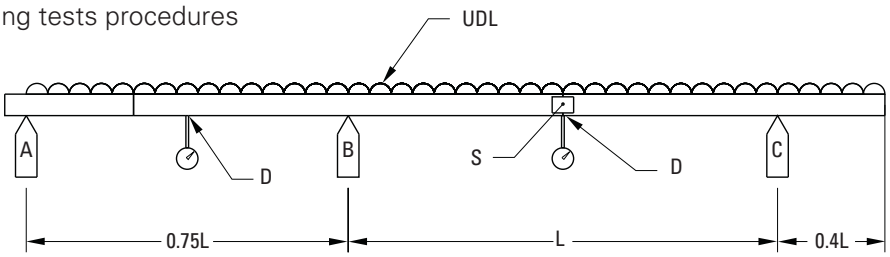

NEMA VE 1
Test Method A

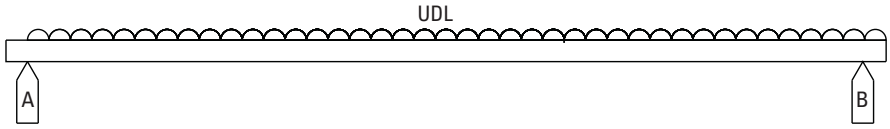

L = Intermediate Span
A,B,C = Support Positions
S = Splice Location (Mid-span)
D = Deflection Measuring Point (Mid-span)
UDL = Uniform Distributed Load

6. Environmental Loads

Wind Loads

Wind loads need to be considered for all outdoor cable ladder installations. The most severe loading to be considered is impact pressure normal to the cable ladder side rails.

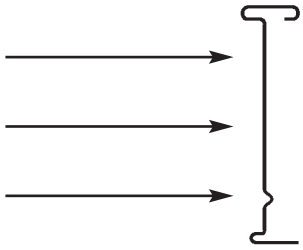

The impact pressure corresponding to several wind velocities are given below in Table 1.

Table 1
Impact Pressures

V (km/h)	P (kg/m²)	V (km/h)	P (kg/m²)	V (km/h)	P (kg/m²)
24	2.83	104	52.70	184	164.94
32	4.98	112	61.00	192	179.58
40	7.81	120	70.27	200	195.20
48	11.22	128	80.03	208	211.30
56	15.27	136	90.28	216	227.41
64	19.96	144	101.02	224	244.49
72	25.28	152	112.73	232	262.54
80	31.18	160	124.93	240	281.09
88	37.72	168	137.62		
96	44.94	176	150.79		

V= Wind Velocity P= Impact Pressure

Note: These values are for an air density of 16.02 kg/m³ corresponding to a temperature of 15.5˚ C and barometric pressure of 10,355 kg/m2.

Example Calculation: Side load for 150mm side rail with 160 km/h wind

$$\frac{124.93 \times 150}{1000} = 18.74 \text{ kg/m}$$

When covers are installed on outdoor cable ladders, aerodynamic effect which can produce a lift strong enough to separate a cover from a ladder needs to be considered. Wind moving across a covered ladder (see detail 2) creates a positive pressure inside the ladder and a negative pressure above the cover. This pressure difference can lift the cover off the ladder.

Detail 2

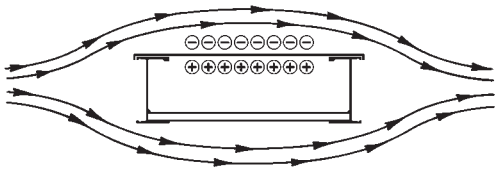

B-Line recommends the use of high performance cover clamps when covered ladders are installed in an area where strong winds occur.

Ice Loads

Glaze ice is the most commonly seen form of ice build-up. It is the result of rain or drizzle freezing on impact with an exposed object. Generally, only the top surface (or the cover) and the windward side of a cable ladder system is significantly coated with ice. The maximum design load to be added due to ice should be calculated as follows:

$$LI = \left(\frac{W \times TI}{1{,}000{,}000} \right) \times DI \quad \text{where;}$$

LI= Ice Load (kg/m)
W= Cable Tray Width (mm)
TI= Maximum Ice Thickness (mm)
DI= Ice Density = 913 kg/m^3

The maximum ice thickness will vary depending on location. A thickness of 12mm can be used as a conservative standard.

Example Calculation:
Ice Loads for 600mm wide tray with 12mm thick ice;

$$\frac{600 \times 12}{1{,}000{,}000} \times 913 = 6.57 \text{ kg/m}$$

Snow Loads

Snow is measured by density and thickness. The density of snow varies almost as much as its thickness. The additional design load from snowfall should be determined using the building codes which apply for each installation. These typically include maximum snowfall and ice accumulation for the region.

7. Impact

B-Line cable ladder conforms to an Impact Test Value of 50J based on the IEC 61537:2006, Section 10.9.

8. Electrical Continuity

Electrical continuity testing of B-Line cable ladder was conducted in accordance with IEC 61537 : 2006, section 11.1.2 and results in an electrical impedance less than 50milli ohms across the joint and 5 milli ohms per meter without a joint. B-Line Metallic Cable Ladder has also been classified as an Equipment Grounding Conductor by Underwriters Laboratories (UL) and meets the National Electrical Code (NEC) Sections 392.60 (A) and 392.60 (B).

9. Free Base Area

In accordance with IEC 61537; 2006, section 6.8, Table 5 "Free Base Area Classification" B-Line cable ladder has a classification of 'Y' on standard 300mm rung spacing and a calculated free base area of 86%.

10. Thermal Contraction and Expansion

It is important that thermal contraction and expansion be considered when installing cable ladder systems. The length of the straight cable ladder runs and the temperature differential govern the number of expansion splice plates required (see Table 2 below).

The cable ladder should be anchored at the support nearest to its midpoint between the expansion splice plates and secured by expansion guides at all other support locations (see Figure 1). The cable ladder should be permitted longitudinal movement in both directions from that fixed point. Covers should be overlapped at expansion splices.

Accurate gap settings at the time of installation are necessary for the proper operation of the expansion splice plates. The following procedure should assist the installer in determining the correct gap: (see Figure 2)

1. Plot the highest expected metal temperature on the maximum temperature line.
2. Plot the lowest expected metal temperature on the minimum temperature line.
3. Draw a line between the maximum and minimum points.
4. Plot the metal temperature at the time of installation to determine the gap setting.

Figure 1

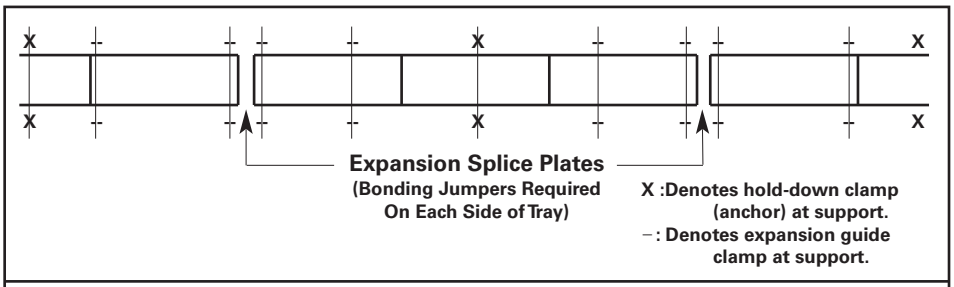

Typical Cable Ladder Installation

Figure 2

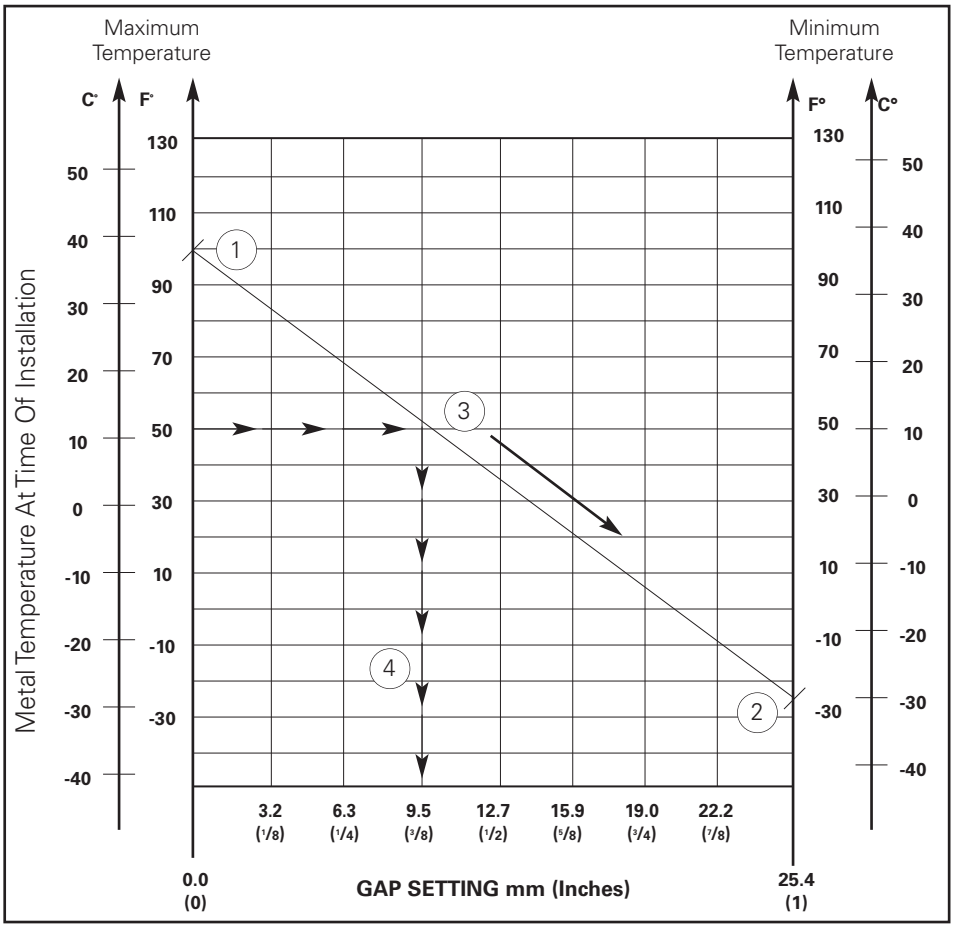

Table 2

Maximum Spacing Between Expansion Joints For 25mm Movement

Temperature Differential		Steel		Aluminum		Stainless Steel 304		Stainless Steel 316	
°C	°F	m	Feet	m	Feet	m	Feet		
13.9	25	156.0	512	79.2	260	105.7	347	115.5	379
27.8	50	78.0	256	39.6	130	53.0	174	57.6	189
41.7	75	52.1	171	26.5	87	35.4	116	38.4	126
55.6	100	39.0	128	19.8	65	26.5	87	29.0	95
69.4	125	31.1	102	15.8	52	21.0	69	23.2	76
83.3	150	25.9	85	13.1	43	17.7	58	19.2	63
97.2	175	22.2	73	11.3	37	15.2	50	16.4	54

Note: every pair of expansion splice plates requires two earth continuity connectors for grounding continuity.

11. Support and Installation Recommendations

Deflection

Deflection in a cable ladder system is primarily an aesthetic consideration. When a cable ladder system is installed in a prominent location, a maximum simple beam deflection of 1/100 of support span can be used as a guideline to minimize visual deflection.

There are two typical beam configurations: simple beam and continuous beam.

A simple beam is a single straight section of cable ladder supported, but not fastened at either end. When the ladder is loaded, the cable ladder is allowed to flex. Simple beam support is seldom used in field installations.

Simple Beam

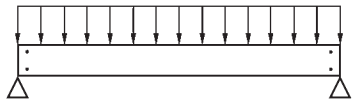

A continuous beam is the beam configuration most commonly used in cable ladder installations (for example when cable ladders are installed across several supports to form a number of spans). The continuous beam possesses traits of both simple and fixed beams. When equal loads are applied to all spans simultaneously, the counter balancing effect of the loads on both sides of a support restricts the movement of the cable ladder at the support. The effect is similar to that of a fixed beam. The end spans behave substantially like simple beams. When cable ladders of identical design are compared, the continuous beam installation will typically have approximately half the deflection of a simple beam of the same span.

Continuous Beam

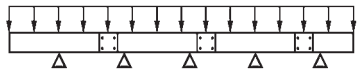

The following factors should be considered when addressing cable ladder deflection:

1. Deflection in a cable ladder system can be reduced by decreasing the support span, or by using a taller or stronger cable ladder.
2. Economic consideration must be given when addressing cable deflection criteria. Eliminating deflection can mean purchasing a stronger ladder at higher cost.
3. The location of splices in a continuous span will affect the deflection of the cable ladder system. The splices should be located at points of minimum stress whenever practical.

   B-Line recommends the following for splice installation:

   Straight section lengths should be equal to or greater than the span length to ensure not more than one splice between supports.

See the figures below for splicing configuration samples.

Typical Continuous Span Configuration

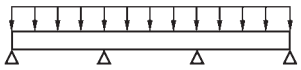

+ Maximum Positive Moment
- Maximum Negative Moment

Preferred Splice Plate Locations

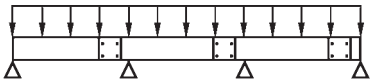

Undesirable Splice Plate Locations

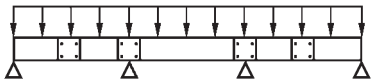

Future Expansion Requirements

One of the many features of cable ladder is the ease of adding cables to an existing system. Future expansion should always be considered when selecting a cable ladder, and allowance should be made for additional fill area and load capacity. A minimum of 50% expansion allowance is recommended.

Installation

Shorter cable ladder lengths are typically easier to maneuver on the job site during installation. Two people may be needed to manipulate longer cable ladder sections, while shorter sections might be handled by one person. Although longer cable ladder lengths are more difficult to maneuver, they can reduce installation time due to the fact that there are fewer splice connections. This trade-off should be evaluated for each set of job site restrictions.

For use with Cable Ladder

For use with Cable Tray

12. Cables and Cable Restraint

Type of Cable

In general, small, highly flexible cables should be installed in cable ladders with close rung spacing of 200mm or less. Larger, less flexible cables are typically installed in cable ladders having 300mm rung spacing. Cable ladders having rung spacing greater than 300mm should be used for very large, stiff cables to help reduce cost and facilitate cable drop-outs.

Cable Exposure

Many cable jackets are manufactured to withstand the environment without additional protection, favoring the use of the cable ladder. Cable jackets should be evaluated during project design for suitability in the project application.

Cable Attachment

A major advantage of cable ladder is the freedom of entry and exit of the cables, as well as the ability to secure cables in the cable ladder. With standard rungs, the cables may be attached with either cable ties or cable cleats. Cable attachment is particularly important on vertical runs or when the ladder is installed on its side. Ladder rung spacing should be chosen to provide adequate cable attachment points while allowing the cables to exit the system.

Cable Flexibility

The proper bend radius for cable ladder fittings is usually determined by the bend radius and stiffness of the cables to be installed. Typically, the cable manufacturer will recommend a minimum bend allowance for each cable. The fitting radius should be equal to or larger than the minimum bend radius of the largest cable which may ever be installed in the system. When several cables are to be installed in the same cable ladder, a larger bend radius may be desirable to ease cable installation.

Space Limitations

The overall dimensions for a cable ladder fitting will increase as the bend radius increases. Size and cost make the smallest acceptable fitting radius most desirable. When large radius fittings are required, the system layout must be designed to allow adequate space.

The following factors should be considered when determining the appropriate cable ladder system.

Material & Finish

- Standards Available
- Corrosion
- Thermal Contraction and Expansion
- Installation Considerations and Electrical Grounding Capacity

Strength

- Environmental Loads
- Concentrated Loads
- Support Span
- Deflection
- Rung/Trough Data
- Load Capacity
- Cable Data

Width & Available Loading Depth

- Cable Diameter
- Allowable Cable Fill
- Barrier Requirements
- Future Expansion Requirements
- Space Limitations

Length

- Lengths Available
- Support Spans (Not to exceed the length of straight sections)
- Space Limitations
- Installation

Loading Possibilities

- Power Application
- Data/Communication Cabling

Bottom Type

- Type of Cable
- Cost vs. Strength
- Cable Exposure
- Cable Attachment

Fitting Radius

- Cable Flexibility
- Space Limitations

Load Capacity

Calculate each anticipated load factor, then add them to obtain a total load.

(Example: Working Load = Cable + Concentrated + Wind + Snow + Ice Loads).

The Working Load should be used, along with the maximum support spacing, to select a span/load class designation from Table 3. Table 4 (page CLS-14) contains the most common load/span class designations per the US and Canadian metallic cable ladder standard, CSA, C22.2 No. 126.1-98 First Addition, NEMA VE 1-1998.

Table 3 - These Loading Classes Are Historical and Supplied For Reference Only

Load Class lb/ft (kg/m)	Class Designations for lengths of ft (m) 8 (2.4)	ft (m) 10 (3.0)	ft (m) 12 (3.7)	ft (m) 16 (4.9)	ft (m) 20 (6.0)
25 (37)	—	A	—	—	—
45 (67)	—	—	—	—	D
50 (74)	8A	—	12A	16A	20A
65 (97)	—	C	—	—	—
75 (112)	8B	—	12B	16B	E or 20B
100 (149)	8C	—	12C	16C	20C
120 (179)	—	D	—	—	—
200 (299)	—	E	—	—	—

Note: 8A/B/C, 12A/B/C, 16A/B/C, and 20A/B/C were the traditional NEMA designations. A, C, D, and E were the conventional CSA designations. Actual tested loadings per span will be stated on the product labels.

Table 4 - B-Line Cable Ladder Load Classes

Aluminum
Copper free

Series	Load Depth	Load lb/ft (kg/m)	Span ft (m)	Former Classes NEMA	Former Classes CSA
RWI04A	3	75 (112)	12 (3.7)	12B	
24A	3	126 (187)	12 (3.7)	12C	D_1 (3m)
34A	3	80 (119)	20 (6.1)	20B	E (6m)
RWI05A	4	83 (123)	12 (3.7)	12B	
25A	4	50 (74)	20 (6.1)	16B	D_1 (6m)
35A	4	121 (180)	16 (4.9)	20B	E (3m)
RWI06A	5	82 (121)	12 (3.7)	12B	
26A	5	51 (76)	20 (6.1)	20A	D_1 (6m)
36A	5	84 (125)	20 (6.1)	20B	E (6m)
46A	5	103 (153)	20 (6.1)	20C	E (6m)
H46A	5	167 (248)	20 (6.1)	20C+	131 kg/m (7.6m)
RWI07A	6	122 (182)	12 (3.7)	12C	
37A	6	80 (119)	20 (6.1)	20B	
47A	6	100 (149)	20 (6.1)	20C	
H47A	6	149 (222)	20 (6.1)	20C+	
57A	6	102 (152)	30 (9.1)	20C+	152 kg/m (9.1m)

Fiberglass

Series	Load Depth	Load lb/ft (kg/m)	Span ft (m)	Former Classes NEMA	Former Classes CSA
075-02C	50mm	108.7 (161.7)	9.8 (3)	10C	
100-02C	75mm	120.4 (179.1)	12.0 (3.7)	12B	
150-03C	125mm	168.0 (250.0)	12.0 (3.7)	12C	
150-06C	125mm	110.6 (164.6)	19.7 (6.0)	20C	
150-05C	125mm	165.1 (245.7)	19.7 (6.0)	20C	

Steel
HDGAF/Pre-Galvanized

Series	Load Depth	Load lb/ft (kg/m)	Span ft (m)	Former Classes NEMA	Former Classes CSA
148*	3	51 (76)	12 (3.7)	12A	C_1 (3m)
156*	4	76 (113)	12 (3.7)	12B	C_1 (3m)
166*	5	77 (115)	12 (3.7)	12B	C_1 (3m)
176*	6	86 (128)	12 (3.7)	12B	137 kg/m (3.7m)
HDL-125*	103mm	– (140)	– (6)		
HDL-150*	128mm	– (184)	– (6)		
SDL-125*	103mm	– (90)	– (6)		
SDL-150*	128mm	– (132)	– (6)		

Stainless Steel

Series	Load Depth	Load lb/ft (kg/m)	Span ft (m)	Former Classes NEMA	Former Classes CSA
HDL125X	103mm	– (105)	– (6)		
HDL-150X	128mm	– (140)	– (6)		
HPL-125X	103mm	– (90)	– (6)		
HPL-150X	128mm	– (98)	– (6)		
SDL-125X	103mm	– (88)	– (6)		
SDL-150X	128mm	– (121)	– (6)		

* G denotes CSA Type 1 (HDGAF) or P denotes CSA Type 2 (Mill-Galvanized) **X** denotes SS6 (Type 316 Stainless)

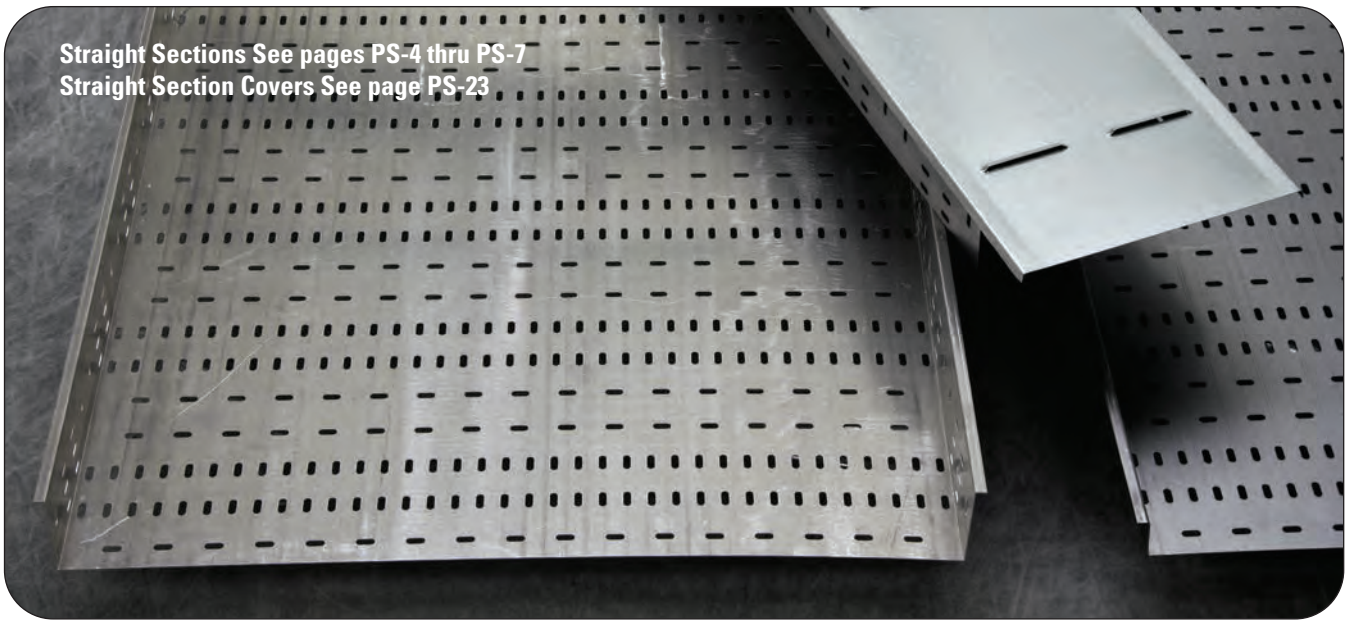
Straight Sections See pages PS-4 thru PS-7
Straight Section Covers See page PS-23

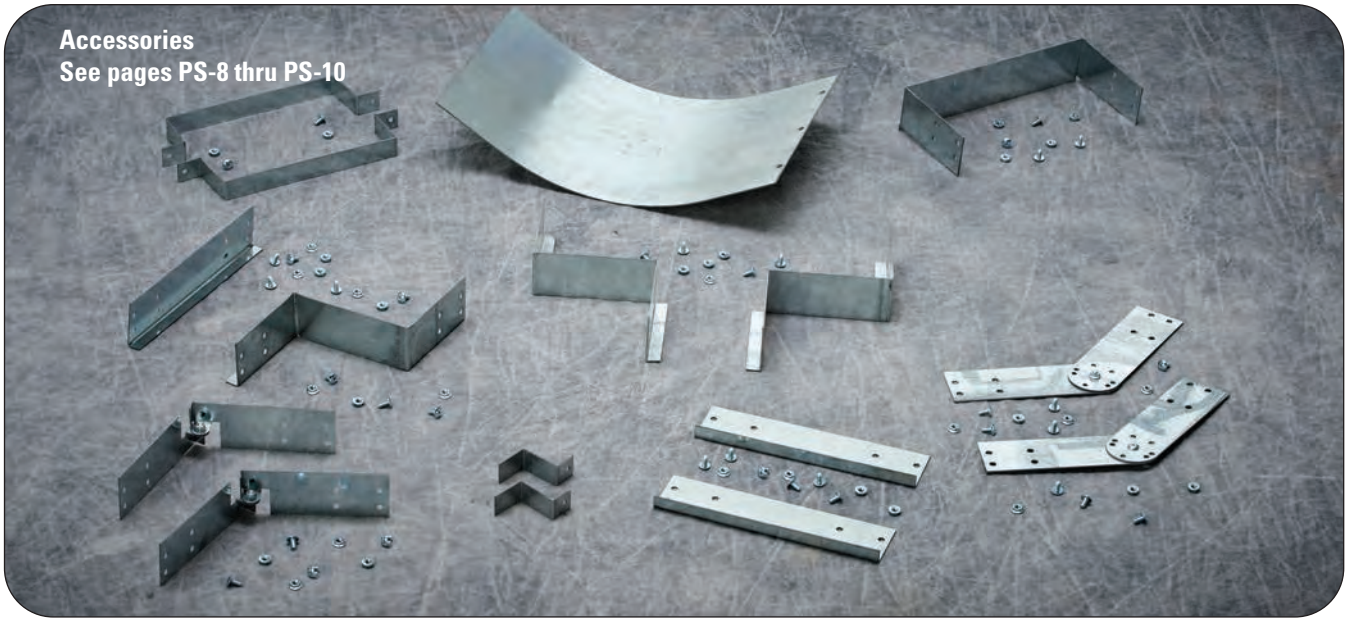
Accessories
See pages PS-8 thru PS-10

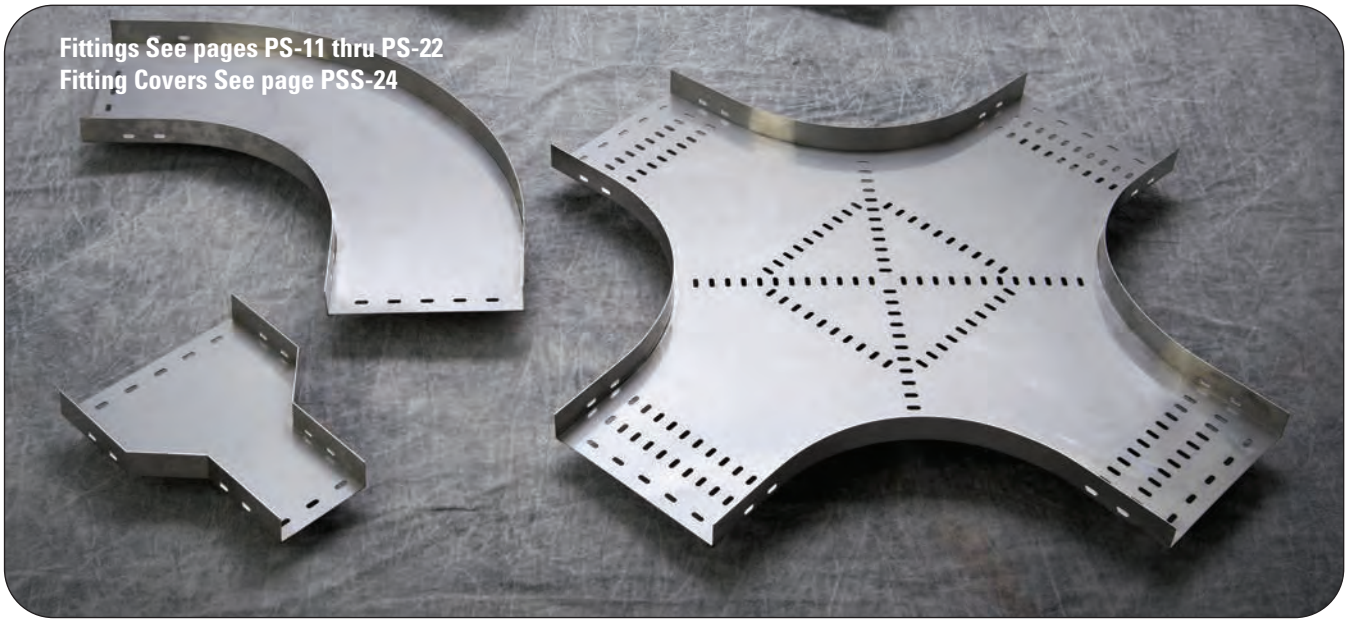
Fittings See pages PS-11 thru PS-22
Fitting Covers See page PSS-24

Perforated & Solid Cable Tray

1. Single piece construction
2. Structural grade steel
3. Solid or perforated bottoms provide continuous support
4. Straight sections and fittings labeled on every piece to show
   - Part Number
   - Company Name
   - Order Number
   - Material

Profiles

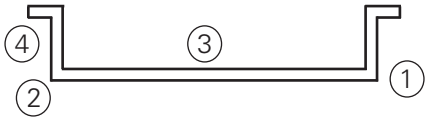

90° Outside Flange

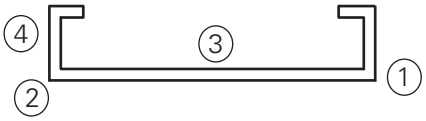

90° Inside Flange

Splices -- provide system integrity

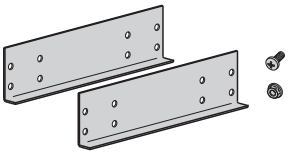

- Match material of tray
- Combination of splice and perforated pattern eliminates need for separate expansion splices
- Multiple finish and hardware options available

Accessories - Flexible Design Principles

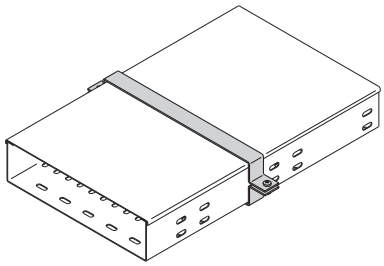

Wrap-A-Round Cover Clamp

- Cover clamps and hold downs can be used on both the 'C' and 'B' profiles
- Flexible hardware and finish options available
- Supplied with matching hardware

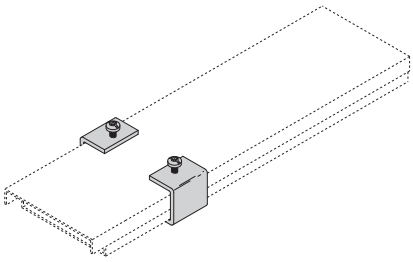

Cover Clamps

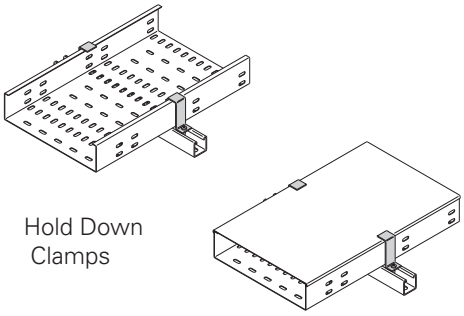

Hold Down Clamps

Perforated & Solid Cable Tray - Load Data

Perforated Cable Tray Load Capacities

Height	Thickness	Span	Material	Load (kg/m)	Material	Load (kg/m)
50	1.0mm	3m	Steel	54.9	Aluminum	NA
75				71.7		NA
100				80.4		NA

Height	Thickness	Span	Material	Load (kg/m)	Material	Load (kg/m)
50	1.5mm	3m	Steel	103.6	Aluminum	33.5
75				158.5		52.6
100				182.9		73.4

Height	Thickness	Span	Material	Load (kg/m)	Material	Load (kg/m)
50	2.0mm	3m	Steel	79.2	Aluminum	46.8
75				201.2		101.5
100				219.4		115.8

All tests per NEMA VE-1. 1.0mm thickness to maximum width of 300mm. All others tested to 900mm width.
Published load safety factor is 1.5.

Perforated Cable Tray Weights (kg/m)

		Steel Tray Weight By Width								
Height	Thickness	50mm	100mm	150mm	200mm	300mm	400mm	500mm	600mm	900mm
25	1.0mm	0.87	1.24	1.61	1.97	2.71	3.45	4.18	4.92	NA
	1.5mm	1.28	1.83	2.38	2.94	4.04	5.14	6.25	7.35	NA
	2.0mm	1.67	2.41	3.14	3.88	5.35	6.82	8.29	9.76	NA
50	1.0mm	1.24	1.61	1.97	2.34	3.08	3.81	4.55	5.29	7.49
	1.5mm	1.83	2.38	2.94	3.49	4.59	5.69	6.80	7.90	11.21
	2.0mm	2.41	3.14	3.88	4.61	6.09	7.56	9.03	10.50	14.91
75	1.0mm	NA	1.97	2.34	2.71	3.45	4.18	4.92	5.65	7.86
	1.5mm	NA	2.94	3.49	4.04	5.14	6.25	7.35	8.45	11.76
	2.0mm	NA	3.88	4.61	5.35	6.82	8.29	9.76	11.24	15.65
100	1.0mm	NA	2.34	2.71	3.08	3.81	4.55	5.29	6.02	8.23
	1.5mm	NA	3.49	4.04	4.59	5.69	6.80	7.90	9.00	12.32
	2.0mm	NA	4.61	5.35	6.09	7.56	9.03	10.50	11.97	16.39

		Aluminum Tray Weight By Width								
Height	Thickness	50mm	100mm	150mm	200mm	300mm	400mm	500mm	600mm	900mm
25	1.5mm	0.44	0.62	0.81	1.00	1.38	1.75	2.13	2.50	NA
	2.0mm	0.57	0.82	1.07	1.32	1.82	2.32	2.82	3.32	NA
50	1.5mm	0.62	0.81	1.00	1.19	1.56	1.94	2.31	2.69	3.82
	2.0mm	0.82	1.07	1.32	1.57	2.07	2.57	3.07	3.58	5.08
75	1.5mm	NA	1.00	1.19	1.38	1.75	2.13	2.50	2.88	4.01
	2.0mm	NA	1.32	1.57	1.82	2.32	2.82	3.32	3.83	5.33
100	1.5mm	NA	1.19	1.38	1.56	1.94	3.31	2.69	3.07	4.19
	2.0mm	NA	1.57	1.82	2.07	2.57	3.07	3.58	4.08	5.58

For approximate solid cable tray weights multiply above steel and aluminum weights by 1.064
NA = Not Available

Straight Section Part Numbering - 25mm Height

Prefix — Suffix

Example: **P 025 V B P 15 SS - 200 - 3000**

Tray Type	Height	Bottom Type	Return Flange Type	Material	Thickness	Type	Width	Length
P = (Perforated & Solid Cable Tray)	**025** = 25mm	**S** = Solid **V** = Perforated	**B** = Outside Flange	**P** = Pre-Galv **G** = HDGAF **SS6** = Stainless Type 316 **A** = Aluminum	**10** * = 1.0mm **15** = 1.5mm **20** = 2.0mm	**SS =** Straight Section	**050** = 50mm **100** = 100mm **150** = 150mm **200** = 200mm **300** = 300mm **400** = 400mm **500** = 500mm **600** = 600mm	**3000** = 3000mm

* 1.0mm thickness is only available in widths up to and including 300 (300mm) and is not available in aluminum.

Splice plates not supplied with straight sections. Order standard splice plates separately from page PS-8.
One (1) pair required to connect to system.

90° Outside Flange (B) with Solid Bottom (S)
shown below

90° Outside Flange (B) with Perforated Bottom (V)
shown below

Notes:
Perforated slot dimensions and patterns may vary depending on tray size and type.
The 90° inside flange is not available on 025 tray heights.

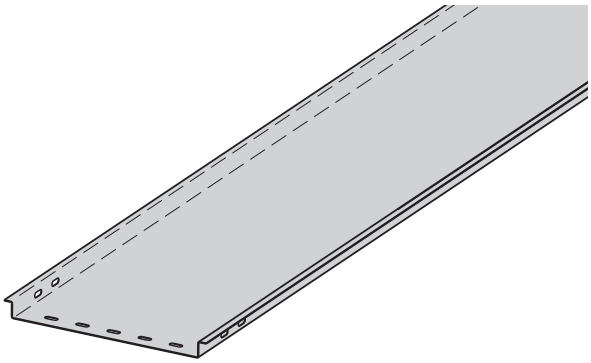

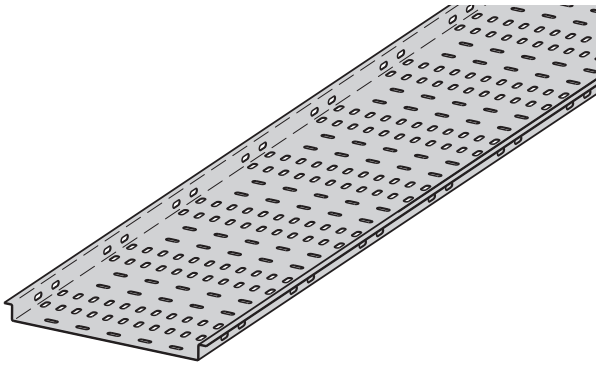

Perforated & Solid Cable Tray Dimensional Drawing - Tray Height 25mm

Outside Flange (B)

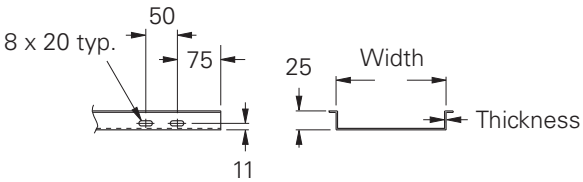

All dimensions are in millimeters unless otherwise specified.

Straight Section Part Numbering - 50mm Height

Prefix — Suffix

Example: **P 050 V B P 15 SS - 200 - 3000**

Tray Type	Height	Bottom Type	Return Flange Type	Material	Thickness	Type	Width	Length
P = (Perforated & Solid Cable Tray)	**050** = 50mm	**S** = Solid **V** = Perforated	**B** = Outside Flange	**P** = Pre-Galv **G** = HDGAF **SS6** = Stainless Type 316 **A** = Aluminum	**10** * = 1.0mm **15** = 1.5mm **20** = 2.0mm	**SS =** Straight Section	**050** = 50mm **100** = 100mm **150** = 150mm **200** = 200mm **300** = 300mm **400** = 400mm **500** = 500mm **600** = 600mm **900** = 900mm	**3000** = 3000mm

* 1.0mm thickness is only available in widths up to and including 300 (300mm) and is not available in aluminum.

Splice plates not supplied with straight sections. Order standard splice plates separately from page PS-8.
One (1) pair required to connect to system.

90° Outside Flange (B) with Solid Bottom (S)
shown below

90° Outside Flange (B) with Perforated Bottom (V)
shown below

Notes:
Perforated slot dimensions and patterns may vary depending on tray size and type.
The 90° inside flange is not available on 050 tray heights.

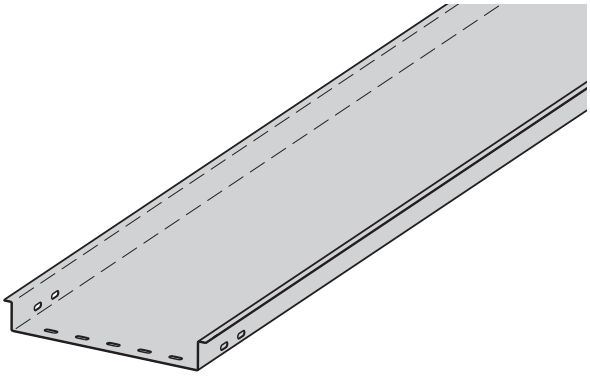

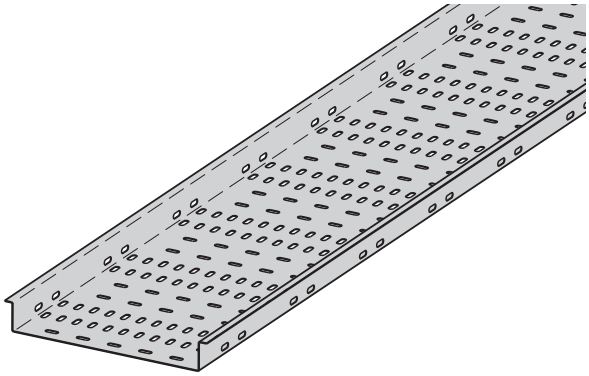

Perforated & Solid Cable Tray Dimensional Drawing - Tray Height 50mm

Outside Flange (B)

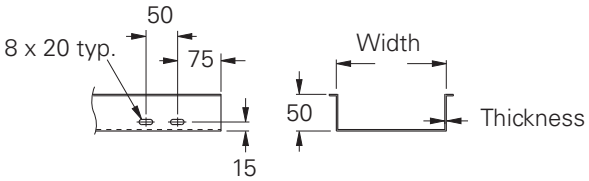

All dimensions are in millimeters unless otherwise specified.

Straight Section Part Numbering - 75mm Height

Prefix Suffix

Example: **P 075 V C P 15 SS - 200 - 3000**

Tray Type	Height	Bottom Type	Return Flange Type	Material	Thickness	Type	Width	Length
P = (Perforated & Solid Cable Tray)	**075** = 75mm	**S** = Solid **V** = Perforated	**C** = Inside Flange **B** = Outside Flange	**P** = Pre-Galv **G** = HDGAF **SS6** = Stainless Type 316 **A** = Aluminum	**10** * = 1.0mm **15** = 1.5mm **20** = 2.0mm	**SS =** Straight Section	**100** = 100mm **150** = 150mm **200** = 200mm **300** = 300mm **400** = 400mm **500** = 500mm **600** = 600mm **900** = 900mm	**3000** = 3000mm

* 1.0mm thickness is only available in widths up to and including 300 (300mm) and is not available in aluminum.

Splice plates not supplied with straight sections. Order standard splice plates separately from page PS-8.
One (1) pair required to connect to system.

90° Outside Flange (B) with Solid Bottom (S)
shown below

90° Inside Flange (C) with Perforated Bottom (V)
shown below

Note:
Perforated slot dimensions and patterns may vary depending on tray size and type.

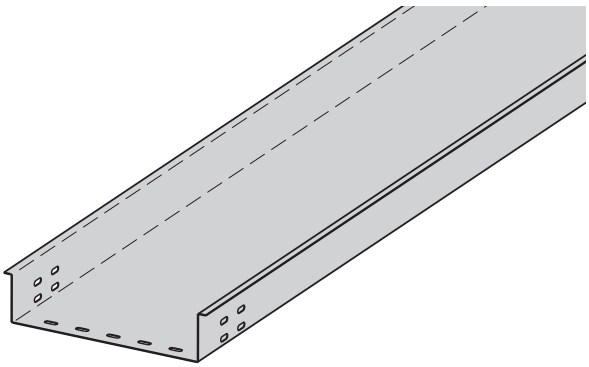

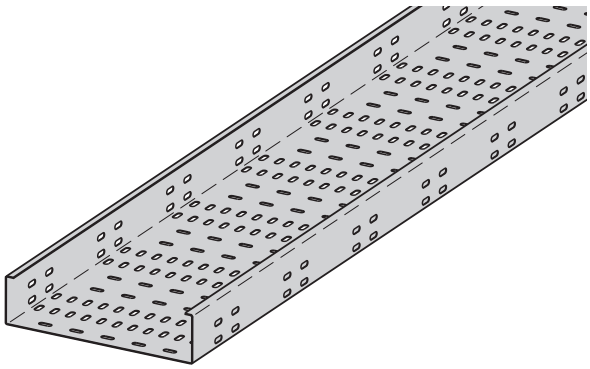

Perforated & Solid Cable Tray Dimensional Drawing - Tray Height 75mm

90° Outside Flange (B)

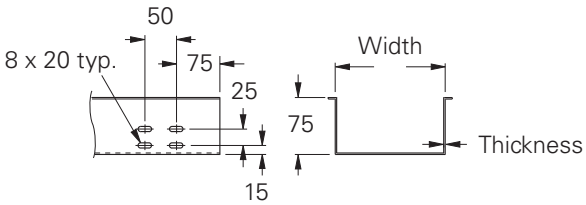

90° Inside Flange (C)

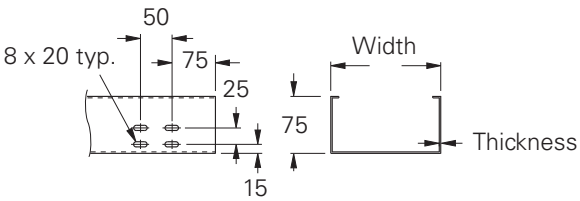

All dimensions are in millimeters unless otherwise specified.

Straight Section Part Numbering - 100mm Height

Prefix | Suffix

Example: **P 100 V C P 15 SS - 200 - 3000**

Tray Type	Height	Bottom Type	Return Flange Type	Material	Thickness	Type	Width	Length
P = (Perforated & Solid Cable Tray)	**100** = 100mm	**S** = Solid **V** = Perforated	**C** = Inside Flange **B** = Outside Flange	**P** = Pre-Galv **G** = HDGAF **SS6** = Stainless Type 316 **A** = Aluminum	**10** * = 1.0mm **15** = 1.5mm **20** = 2.0mm	**SS =** Straight Section	**100** = 100mm **150** = 150mm **200** = 200mm **300** = 300mm **400** = 400mm **500** = 500mm **600** = 600mm **900** = 900mm	**3000** = 3000mm

* 1.0mm thickness is only available in widths up to and including 300 (300mm) and is not available in aluminum.

Splice plates not supplied with straight sections. Order standard splice plates separately from page PS-8.
One (1) pair required to connect to system.

90° Outside Flange (B) with Solid Bottom (S)
shown below

90° Inside Flange (C) with Perforated Bottom (V)
shown below

Note:
Perforated slot dimensions and patterns may vary depending on tray size and type.

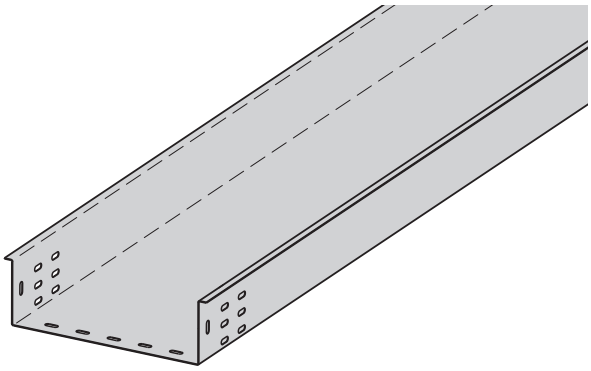

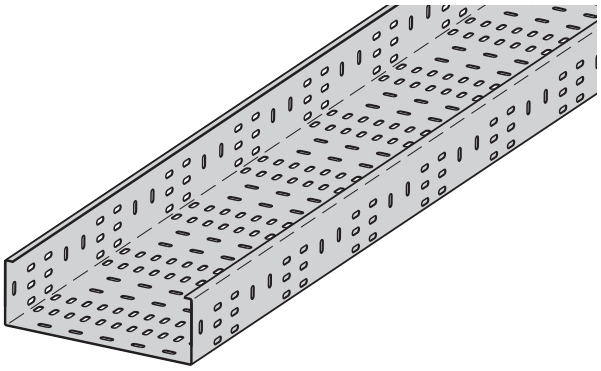

Perforated & Solid Cable Ladder Dimensional Drawing - Side Rail Height 100mm

90° Outside Flange (B)

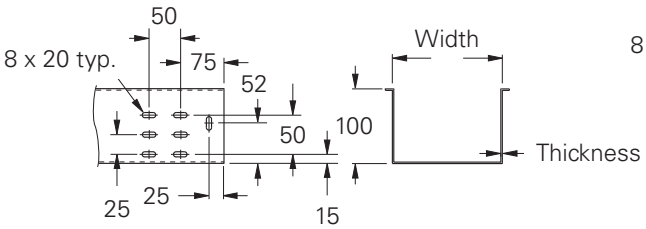

90° Inside Flange (C)

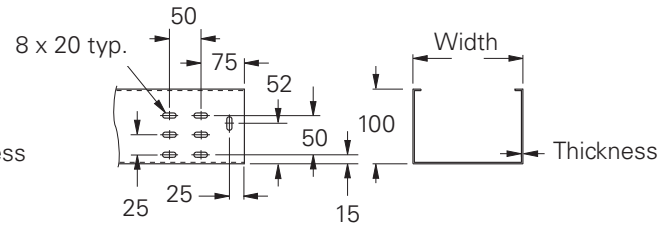

All dimensions are in millimeters unless otherwise specified.

Bottom Splice Plates (Mounted on bottom of trays as splice plates or to stabilize connections on wider trays)

(Sold Individually With Hardware)

- ** Insert P for Pre-Galvanized,
  G for Hot Dip Galvanized,
  SS6 for Stainless Steel 316
  A for Aluminum

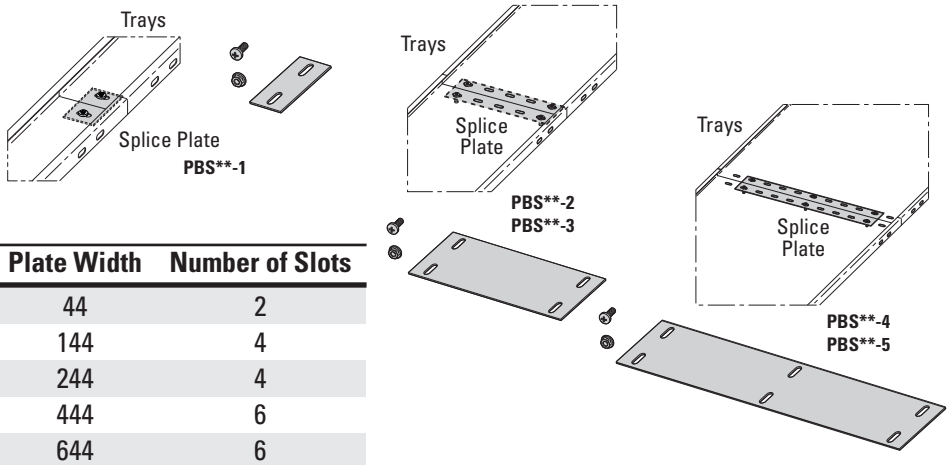

Part Number	Tray Widths	Plate Width	Number of Slots
PBS**-1	50 - 100	44	2
PBS**-2	150 - 300	144	4
PBS**-3	400 - 500	244	4
PBS**-4	600	444	6
PBS**-5	900	644	6

Side Splice Plates (Outside mount)

(Sold in Pairs With Hardware)

- ** Insert P for Pre-Galvanized, G for Hot Dip Galvanized,
  SS6 for Stainless Steel 316, A for Aluminum

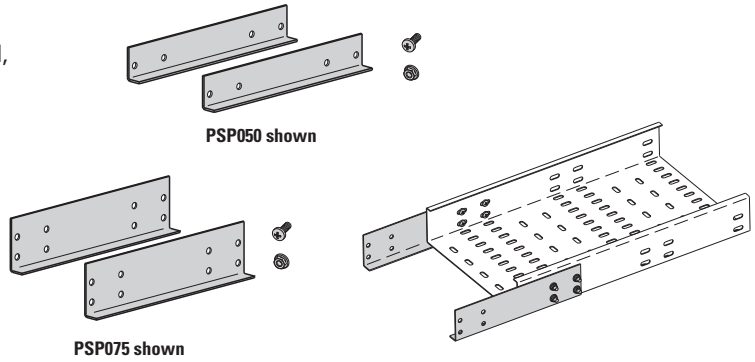

Part Number	Tray Height
PSP025**	25
PSP050**	50
PSP075**	75
PSP100**	100

Horizontal Adjustable Splice Plates (Outside mount)

(Sold in Pairs With Hardware)

- ** Insert P for Pre-Galvanized, G for Hot Dip Galvanized,
  SS6 for Stainless Steel 316, A for Aluminum
- Requires mitering of trays and drilling new splice plate holes on inside angle

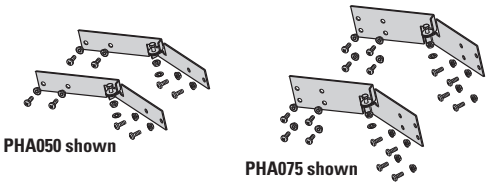

Part Number	Tray Height
PHA025**	25
PHA050**	50
PHA075**	75
PHA100**	100

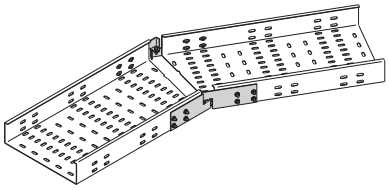

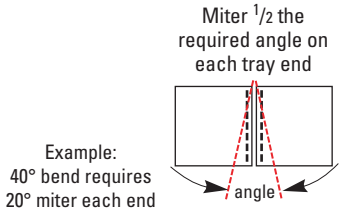

Vertical Adjustable Splice Plates (Outside mount)

(Sold in Pairs With Hardware)

- ** Insert P for Pre-Galvanized, G for Hot Dip Galvanized,
  SS6 for Stainless Steel 316, A for Aluminum

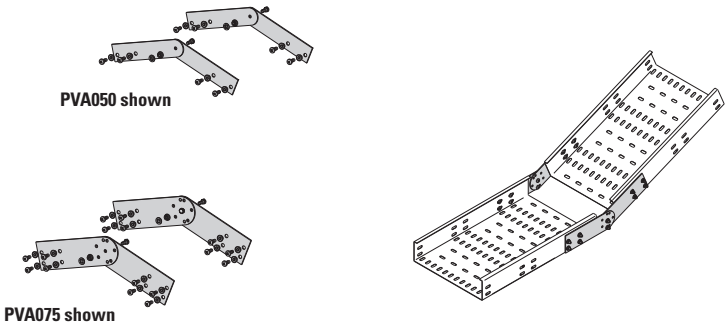

Part Number	Tray Height
PVA025**	25
PVA050**	50
PVA075**	75
PVA100**	100

All dimensions are in millimeters unless otherwise specified.

Right Reducer Splice Plates (Mounted outside of tray)

(Sold as a Set With Hardware)

- ** Insert P for Pre-Galvanized, G for Hot Dip Galvanized, SS6 for Stainless Steel 316, A for Aluminum
- __ Width: Insert width difference between the two trays

Part Number	Tray Height
PRR025**-__	25
PRR050**-__	50
PRR075**-__	75
PRR100**-__	100

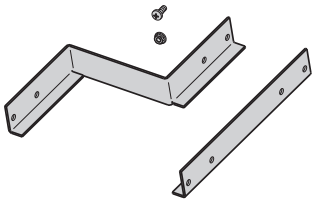

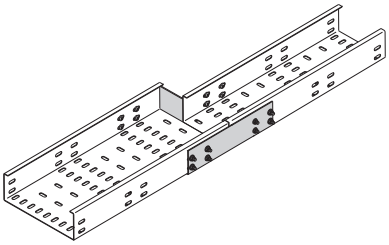

Straight Reducer Splice Plates (Mounted outside of tray)

(Sold as a Set With Hardware)

- ** Insert P for Pre-Galvanized, G for Hot Dip Galvanized, SS6 for Stainless Steel 316, A for Aluminum
- __ Width: Insert width difference between the two trays

Part Number	Tray Height
PSR025**-__	25
PSR050**-__	50
PSR075**-__	75
PSR100**-__	100

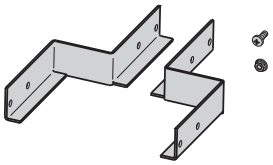

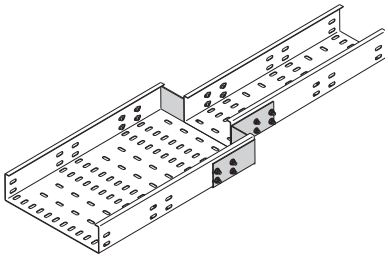

Left Reducer Splice Plates (Mounted outside of tray)

(Sold as a Set With Hardware)

- ** Insert P for Pre-Galvanized, G for Hot Dip Galvanized, SS6 for Stainless Steel 316, A for Aluminum
- __ Width: Insert width difference between the two trays

Part Number	Tray Height
PLR025**-__	25
PLR050**-__	50
PLR075**-__	75
PLR100**-__	100

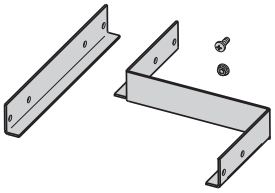

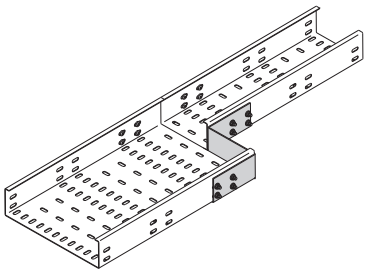

Blind End (Mounted outside of tray)

(Sold Individually With Hardware)

- ** Insert P for Pre-Galvanized, G for Hot Dip Galvanized, SS6 for Stainless Steel 316, A for Aluminum
- __ Tray Width

Part Number	Tray Height
PBE025**-__	25
PBE050**-__	50
PBE075**-__	75
PBE100**-__	100

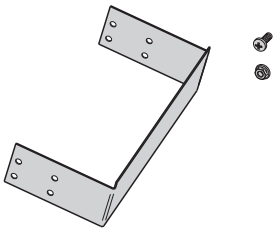

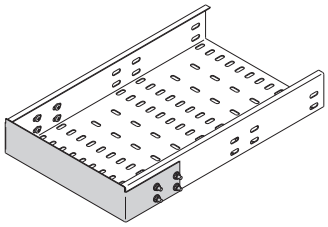

All dimensions are in millimeters unless otherwise specified.

Drop-Out

(Sold Individually With Hardware)

- ** Insert P for Pre-Galvanized, G for Hot Dip Galvanized, SS6 for Stainless Steel 316, A for Aluminum

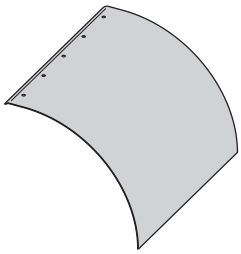

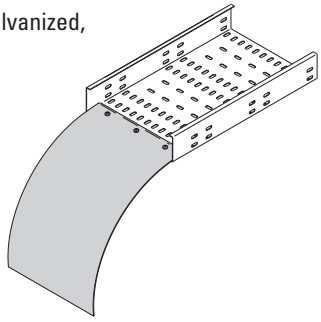

Part Number	Tray Width
PDO**-050	50
PDO**-100	100
PDO**-150	150
PDO**-200	200
PDO**-300	300
PDO**-400	400
PDO**-500	500
PDO**-600	600
PDO**-900	900

Wrap-Around Cover Clamps

(Sold Individually With Hardware)

- ** Insert P for Pre-Galvanized, G for Hot Dip Galvanized, SS6 for Stainless Steel 316, A for Aluminum
- __ Insert Tray Width of 050 = 50mm, 100 = 100mm, 150 = 150mm, 200 = 200mm, 300 = 300mm, 400 = 400mm, 500 = 500mm, 600 = 600mm, 900 = 900mm

Part Number	Tray Height
PWCC025**-__	25 *
PWCC050**-__	50
PWCC075**-__	75
PWCC100**-__	100

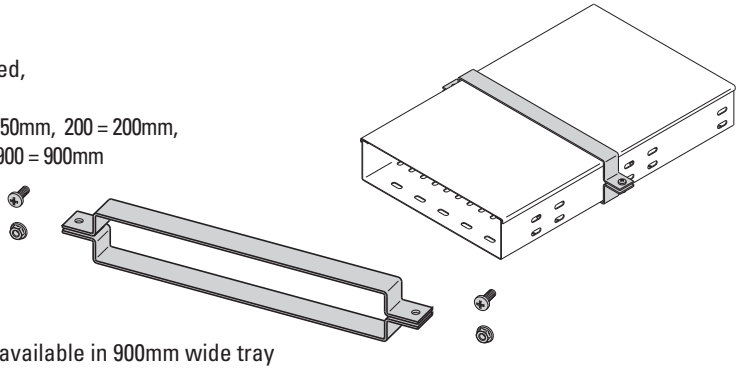

* Is not available in 900mm wide tray

C-Shape Cover Clamps - For (B) & (C) Flanges

(Sold in Pairs With Hardware)

- ** Insert P for Pre-Galvanized, G for Hot Dip Galvanized, SS6 for Stainless Steel 316, A for Aluminum

Part Number	Tray Height
PCCC025**	25
PCCC050**	50
PCCC075**	75
PCCC100**	100

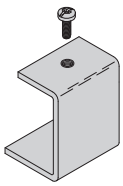

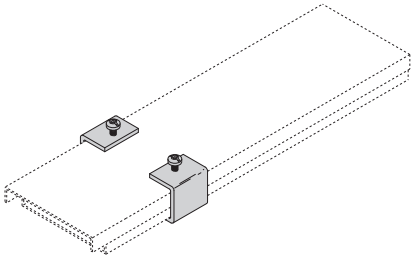

Hold Downs - For (B) & (C) Flanges

(Sold in Pairs With Hardware)

- ** Insert P for Pre-Galvanized, G for Hot Dip Galvanized, SS6 for Stainless Steel 316, A for Aluminum

Part Number	Tray Height
PHD025**	25
PHD050**	50
PHD075**	75
PHD100**	100

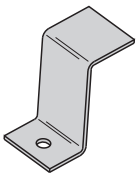

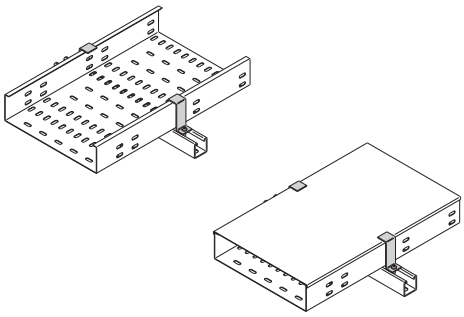

Accessory Hardware

- (*) Insert HDG for Hot Dip Galvanized, SS6 for Stainless Steel 316, or N for Nylon

Part Number	Item
M6 x 16 PHS (*)	Phillips Head Screw
M6 SFHN (*)	Serrated Flange Hex Nut

All dimensions are in millimeters unless otherwise specified.

Perforated & Solid Cable Tray - Fittings

Cable Tray Fittings are designed to support cables as they transition directions.

Note: Perforated slot dimensions and patterns may vary depending on tray size and type. Solid and perforated bottoms are available.

HB
Horizontal Bend
(Perforated)

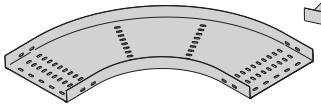

HT
Horizontal Tee
(Solid)

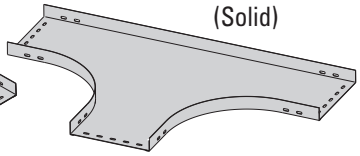

HX
Horizontal Cross
(Perforated)

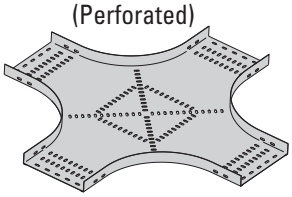

VO
Vertical Outside
Bend (Perforated)

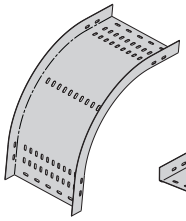

VI
Vertical Inside
Bend (Solid)

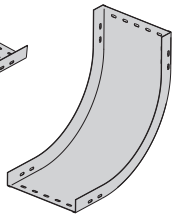

Splice Plate Holes

For dimensions of fitting splice plate holes see the following pages:

Page 4 for 025 tray height
Page 5 for 050 tray height
Page 6 for 075 tray height
Page 7 for 100 tray height

Fittings Part Numbering

Prefix | Suffix

Example: **PF 050 V N SS6 15 HB - 200 - 60 R600**

Tray Type	Height	Bottom Type	Flange Type	Material	Thickness	Type	Width	Angle † (°)	Radius
PF = (Perforated & Solid Cable Tray)	**025** = 25mm **050** = 50mm **075** = 75mm **100** = 100mm	**S** = Solid **V** = Perforated	**N** = No Flange	**P** = Pre-Galv **G** = HDGAF **SS6** = Stainless Type 316 **A** = Aluminum	**15** = 1.5mm **20** = 2.0mm	**HB** **HT** † **HX** † **VO** **VI**	**050** = 50mm Δ **100** = 100mm **150** = 150mm **200** = 200mm **300** = 300mm **400** = 400mm **500** = 500mm **600** = 600mm **900** = 900mm †††	**30** **45** **60** **90**	**R300** = 300mm **R600** = 600mm

† No angle designation required on these fittings. See fitting page when creating part numbers.
††† Not available on 025 tray heights Δ Only available on 025 and 050 tray heights

Reducer Fittings Part Numbering

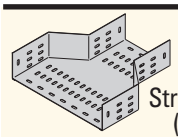

SR
Straight Reducer
(Perforated)

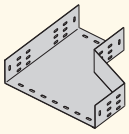

LR
Left Reducer
(Solid)

Prefix | Suffix

Example: **PF 050 V N SS6 15 RR - 600 - 300**

Tray Type	Height	Bottom Type	Flange Type	Material	Thickness	Type	Width 1	Width 2
PF = (Perforated & Solid Cable Tray)	**025** = 25mm **050** = 50mm **075** = 75mm **100** = 100mm	**S** = Solid **V** = Perforated	**N** = No Flange	**P** = Pre-Galv **G** = HDGAF **SS6** = Stainless Type 316 **A** = Aluminum	**15** = 1.5mm **20** = 2.0mm	**RR** † **LR** † **SR** †	**100** = 100mm **150** = 150mm **200** = 200mm **300** = 300mm **400** = 400mm **500** = 500mm **600** = 600mm **900** = 900mm †††	**050** = 50mm Δ **100** = 100mm **150** = 150mm **200** = 200mm **300** = 300mm **400** = 400mm **500** = 500mm **600** = 600mm

† No angle designation required on these fittings. See fitting page when creating part numbers.
††† Not available on 025 tray heights Δ Only available on 025 and 050 tray heights

All dimensions are in millimeters unless otherwise specified.

Horizontal Bends 90° (HB)

Splice plates not supplied with fittings.
Order standard splice plates separately from page PS-8.
One (1) pair required to connect to system.

Note:
Perforated slot dimensions and patterns may vary depending on tray size and type.

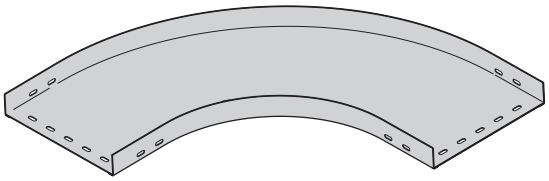

90˚ Horizontal Bend Solid

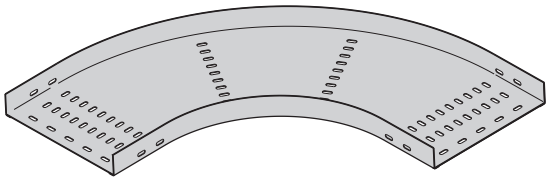

90˚ Horizontal Bend Perforated

Bend Radius R mm	Tray Width W mm	90˚ Horizontal Bend Dimensions Formed Radius Fittings Catalog No.	A mm	B mm
300	50	**PF(Prefix)HB-050-90R300**	490	490
	100	**PF(Prefix)HB-100-90R300**	540	540
	150	**PF(Prefix)HB-150-90R300**	590	590
	200	**PF(Prefix)HB-200-90R300**	640	640
	300	**PF(Prefix)HB-300-90R300**	740	740
	400	**PF(Prefix)HB-400-90R300**	840	840
	500	**PF(Prefix)HB-500-90R300**	940	940
	600	**PF(Prefix)HB-600-90R300**	1040	1040
	900	**PF(Prefix)HB-900-90R300**	1340	1340
600	50	**PF(Prefix)HB-050-90R600**	790	790
	100	**PF(Prefix)HB-100-90R600**	840	840
	150	**PF(Prefix)HB-150-90R600**	890	890
	200	**PF(Prefix)HB-200-90R600**	940	940
	300	**PF(Prefix)HB-300-90R600**	1040	1040
	400	**PF(Prefix)HB-400-90R600**	1140	1140
	500	**PF(Prefix)HB-500-90R600**	1240	1240
	600	**PF(Prefix)HB-600-90R600**	1340	1340
	900	**PF(Prefix)HB-900-90R600**	1640	1640

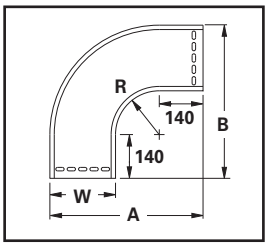

(Prefix) See page PS-11 for catalog number prefix and splice plate hole information.
Width dimensions are to inside wall. Manufacturing tolerances apply to all dimensions.

All dimensions are in millimeters unless otherwise specified.

Note:
Perforated slot dimensions and patterns may vary depending on tray size and type.

Horizontal Bends 60° (HB)

Splice plates not supplied with fittings.
Order standard splice plates separately from page PS-8.
One (1) pair required to connect to system.

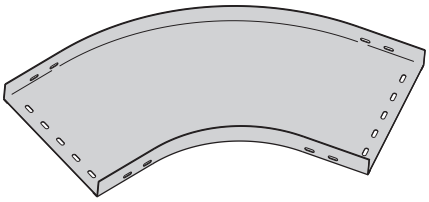

60˚ Horizontal Bend
Solid

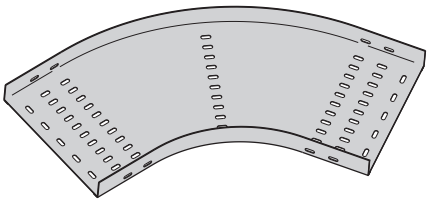

60˚ Horizontal Bend
Perforated

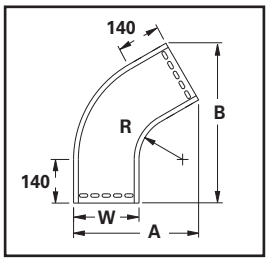

Bend Radius R mm	Tray Width W mm	60˚ Horizontal Bend Dimensions Formed Radius Fittings Catalog No.	A mm	B mm
300	50	**PF(Prefix)HB-050-60R300**	321	513
	100	**PF(Prefix)HB-100-60R300**	371	556
	150	**PF(Prefix)HB-150-60R300**	421	600
	200	**PF(Prefix)HB-200-60R300**	471	643
	300	**PF(Prefix)HB-300-60R300**	571	730
	400	**PF(Prefix)HB-400-60R300**	671	816
	500	**PF(Prefix)HB-500-60R300**	771	903
	600	**PF(Prefix)HB-600-60R300**	871	989
	900	**PF(Prefix)HB-900-60R300**	1171	1249
600	50	**PF(Prefix)HB-050-60R600**	471	773
	100	**PF(Prefix)HB-100-60R600**	521	816
	150	**PF(Prefix)HB-150-60R600**	571	850
	200	**PF(Prefix)HB-200-60R600**	621	903
	300	**PF(Prefix)HB-300-60R600**	721	989
	400	**PF(Prefix)HB-400-60R600**	821	1076
	500	**PF(Prefix)HB-500-60R600**	921	1163
	600	**PF(Prefix)HB-600-60R600**	1021	1249
	900	**PF(Prefix)HB-900-60R600**	1321	1509

(Prefix) See page PS-11 for catalog number prefix and splice plate hole information.
Width dimensions are to inside wall. Manufacturing tolerances apply to all dimensions.

Horizontal Bends 45° (HB)

Splice plates not supplied with fittings.
Order standard splice plates separately from page PS-8.
One (1) pair required to connect to system.

Note:
Perforated slot dimensions and patterns may vary depending on tray size and type.

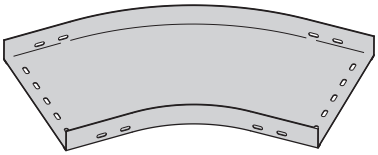

45˚ Horizontal Bend Solid

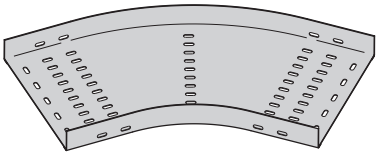

45˚ Horizontal Bend Perforated

Bend Radius R mm	Tray Width W mm	45˚ Horizontal Bend Dimensions Formed Radius Fittings Catalog No.	A mm	B mm
300	50	**PF(Prefix)HB-050-45R300**	237	486
	100	**PF(Prefix)HB-100-45R300**	287	522
	150	**PF(Prefix)HB-150-45R300**	337	557
	200	**PF(Prefix)HB-200-45R300**	387	593
	300	**PF(Prefix)HB-300-45R300**	487	663
	400	**PF(Prefix)HB-400-45R300**	587	734
	500	**PF(Prefix)HB-500-45R300**	687	805
	600	**PF(Prefix)HB-600-45R300**	787	875
	900	**PF(Prefix)HB-900-45R300**	1087	1088
600	50	**PF(Prefix)HB-050-45R600**	325	699
	100	**PF(Prefix)HB-100-45R600**	375	734
	150	**PF(Prefix)HB-150-45R600**	425	769
	200	**PF(Prefix)HB-200-45R600**	475	805
	300	**PF(Prefix)HB-300-45R600**	575	875
	400	**PF(Prefix)HB-400-45R600**	675	946
	500	**PF(Prefix)HB-500-45R600**	775	1017
	600	**PF(Prefix)HB-600-45R600**	875	1088
	900	**PF(Prefix)HB-900-45R600**	1175	1300

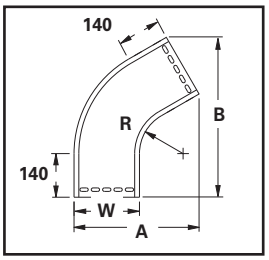

(Prefix) See page PS-11 for catalog number prefix and splice plate hole information.
Width dimensions are to inside wall. Manufacturing tolerances apply to all dimensions.

All dimensions are in millimeters unless otherwise specified.

Note:
Perforated slot dimensions and patterns may vary depending on tray size and type.

Horizontal Bends 30° (HB)

Splice plates not supplied with fittings.
Order standard splice plates separately from page PS-8.
One (1) pair required to connect to system.

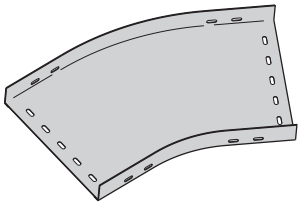

30˚ Horizontal Bend Solid

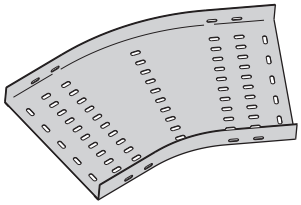

30˚ Horizontal Bend Perforated

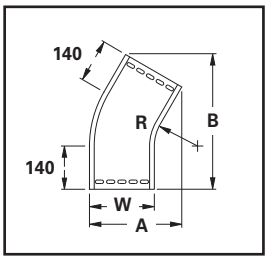

Bend Radius R mm	Tray Width W mm	30˚ Horizontal Bend Dimensions Formed Radius Fittings Catalog No.	A mm	B mm
300	50	**PF(Prefix)HB-050-30R300**	160	436
	100	**PF(Prefix)HB-100-30R300**	210	461
	150	**PF(Prefix)HB-150-30R300**	260	486
	200	**PF(Prefix)HB-200-30R300**	310	511
	300	**PF(Prefix)HB-300-30R300**	410	561
	400	**PF(Prefix)HB-400-30R300**	510	611
	500	**PF(Prefix)HB-500-30R300**	610	661
	600	**PF(Prefix)HB-600-30R300**	710	711
	900	**PF(Prefix)HB-900-30R300**	1010	861
600	50	**PF(Prefix)HB-050-30R600**	200	586
	100	**PF(Prefix)HB-100-30R600**	250	611
	150	**PF(Prefix)HB-150-30R600**	300	636
	200	**PF(Prefix)HB-200-30R600**	350	661
	300	**PF(Prefix)HB-300-30R600**	450	711
	400	**PF(Prefix)HB-400-30R600**	550	761
	500	**PF(Prefix)HB-500-30R600**	650	811
	600	**PF(Prefix)HB-600-30R600**	750	861
	900	**PF(Prefix)HB-900-30R600**	1050	1011

(Prefix) See page 1PS-1 for catalog number prefix and splice plate hole information.
Width dimensions are to inside wall. Manufacturing tolerances apply to all dimensions.

Horizontal Tee (HT)

Splice plates not supplied with fittings.
Order standard splice plates separately from page PS-8.
Two (2) pair required to connect to system.

Note:
Perforated slot dimensions and patterns may vary depending on tray size and type.

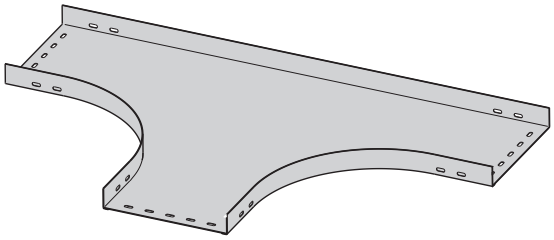

Horizontal Tee Solid

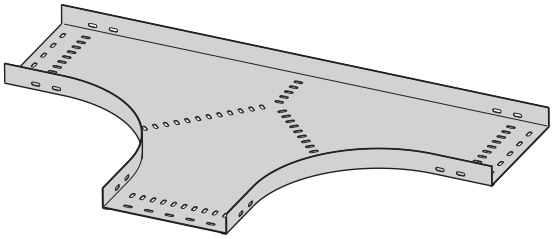

Horizontal Tee Perforated

Bend Radius R mm	Tray Width W mm	Horizontal Cross Dimensions Formed Radius Fittings Catalog No.	A mm	B mm
300	50	**PF(Prefix)HT-050-R300**	490	930
	100	**PF(Prefix)HT-100-R300**	540	980
	150	**PF(Prefix)HT-150-R300**	590	1030
	200	**PF(Prefix)HT-200-R300**	640	1080
	300	**PF(Prefix)HT-300-R300**	740	1180
	400	**PF(Prefix)HT-400-R300**	840	1280
	500	**PF(Prefix)HT-500-R300**	940	1380
	600	**PF(Prefix)HT-600-R300**	1040	1480
	900	**PF(Prefix)HT-900-R300**	1340	1780
600	50	**PF(Prefix)HT-050-R600**	790	1530
	100	**PF(Prefix)HT-100-R600**	840	1580
	150	**PF(Prefix)HT-150-R600**	890	1630
	200	**PF(Prefix)HT-200-R600**	940	1680
	300	**PF(Prefix)HT-300-R600**	1040	1780
	400	**PF(Prefix)HT-400-R600**	1140	1880
	500	**PF(Prefix)HT-500-R600**	1240	1980
	600	**PF(Prefix)HT-600-R600**	1340	2080
	900	**PF(Prefix)HT-900-R600**	1640	2380

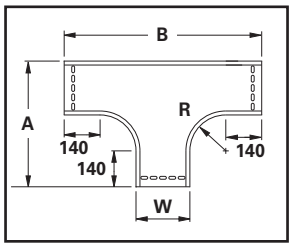

(Prefix) See page PS-11 for catalog number prefix and splice plate hole information.
Width dimensions are to inside wall. Manufacturing tolerances apply to all dimensions.

All dimensions are in millimeters unless otherwise specified.

Note:
Perforated slot dimensions and patterns may vary depending on tray size and type.

Horizontal Cross (HX)

Splice plates not supplied with fittings.
Order standard splice plates separately from page PS-8.
Three (3) pair required to connect to system.

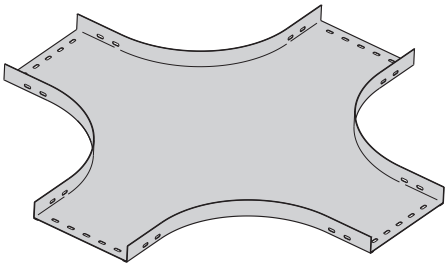

Horizontal Cross
Solid

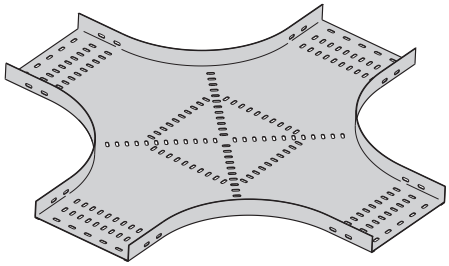

Horizontal Cross
Perforated

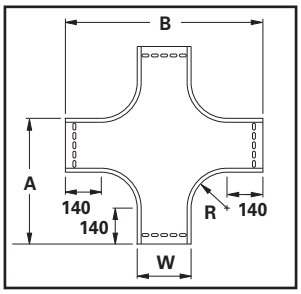

Bend Radius R mm	Tray Width W mm	Horizontal Cross Dimensions Formed Radius Fittings Catalog No.	A mm	B mm
300	50	PF(Prefix)HX-050-R300	490	930
	100	PF(Prefix)HX-100-R300	540	980
	150	PF(Prefix)HX-150-R300	590	1030
	200	PF(Prefix)HX-200-R300	640	1080
	300	PF(Prefix)HX-300-R300	740	1180
	400	PF(Prefix)HX-400-R300	840	1280
	500	PF(Prefix)HX-500-R300	940	1380
	600	PF(Prefix)HX-600-R300	1040	1480
	900	PF(Prefix)HX-900-R300	1340	1780
600	50	PF(Prefix)HX-050-R600	790	1530
	100	PF(Prefix)HX-100-R600	840	1580
	150	PF(Prefix)HX-150-R600	890	1630
	200	PF(Prefix)HX-200-R600	940	1680
	300	PF(Prefix)HX-300-R600	1040	1780
	400	PF(Prefix)HX-400-R600	1140	1880
	500	PF(Prefix)HX-500-R600	1240	1980
	600	PF(Prefix)HX-600-R600	1340	2080
	900	PF(Prefix)HX-900-R600	1640	2380

(Prefix) See page PS-11 for catalog number prefix and splice plate hole information.
Width dimensions are to inside wall. Manufacturing tolerances apply to all dimensions.

Left Reducer (LR)
Straight Reducer (SR)
Right Reducer (RR)

Splice plates not supplied with fittings.
Order standard splice plates separately from page PS-8.
One (1) pair required to connect to system.

Note:
Perforated slot dimensions and patterns may vary depending on tray size and type.

Reducer Part Numbering

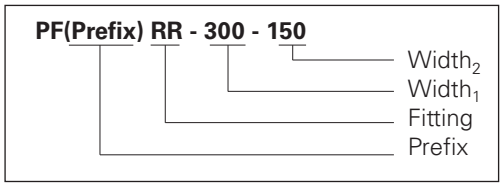

Tray Width W_1 mm	W_2 mm	Left Hand Reducer Catalog No.	Straight Reducer Catalog No.	Right Hand Reducer Catalog No.
100	50	PF(Prefix)LR-100-050	PF(Prefix)SR-100-050	PF(Prefix)RR-100-050
150	50	PF(Prefix)LR-150-050	PF(Prefix)SR-150-050	PF(Prefix)RR-150-050
	100	PF(Prefix)LR-150-100	PF(Prefix)SR-150-100	PF(Prefix)RR-150-100
200	50	PF(Prefix)LR-200-050	PF(Prefix)SR-200-050	PF(Prefix)RR-200-050
	100	PF(Prefix)LR-200-100	PF(Prefix)SR-200-100	PF(Prefix)RR-200-100
	150	PF(Prefix)LR-200-150	PF(Prefix)SR-200-150	PF(Prefix)RR-200-150
300	50	PF(Prefix)LR-300-050	PF(Prefix)SR-300-050	PF(Prefix)RR-300-050
	100	PF(Prefix)LR-300-100	PF(Prefix)SR-300-100	PF(Prefix)RR-300-100
	150	PF(Prefix)LR-300-150	PF(Prefix)SR-300-150	PF(Prefix)RR-300-150
	200	PF(Prefix)LR-300-200	PF(Prefix)SR-300-200	PF(Prefix)RR-300-200
400	50	PF(Prefix)LR-400-050	PF(Prefix)SR-400-050	PF(Prefix)RR-400-050
	100	PF(Prefix)LR-400-100	PF(Prefix)SR-400-100	PF(Prefix)RR-400-100
	150	PF(Prefix)LR-400-150	PF(Prefix)SR-400-150	PF(Prefix)RR-400-150
	200	PF(Prefix)LR-400-200	PF(Prefix)SR-400-200	PF(Prefix)RR-400-200
	300	PF(Prefix)LR-400-300	PF(Prefix)SR-400-300	PF(Prefix)RR-400-300
500	50	PF(Prefix)LR-500-050	PF(Prefix)SR-500-050	PF(Prefix)RR-500-050
	100	PF(Prefix)LR-500-100	PF(Prefix)SR-500-100	PF(Prefix)RR-500-100
	150	PF(Prefix)LR-500-150	PF(Prefix)SR-500-150	PF(Prefix)RR-500-150
	200	PF(Prefix)LR-500-200	PF(Prefix)SR-500-200	PF(Prefix)RR-500-200
	300	PF(Prefix)LR-500-300	PF(Prefix)SR-500-300	PF(Prefix)RR-500-300
	400	PF(Prefix)LR-500-400	PF(Prefix)SR-500-400	PF(Prefix)RR-500-400
600	50	PF(Prefix)LR-600-050	PF(Prefix)SR-600-050	PF(Prefix)RR-600-050
	100	PF(Prefix)LR-600-100	PF(Prefix)SR-600-100	PF(Prefix)RR-600-100
	150	PF(Prefix)LR-600-150	PF(Prefix)SR-600-150	PF(Prefix)RR-600-150
	200	PF(Prefix)LR-600-200	PF(Prefix)SR-600-200	PF(Prefix)RR-600-200
	300	PF(Prefix)LR-600-300	PF(Prefix)SR-600-300	PF(Prefix)RR-600-300
	400	PF(Prefix)LR-600-400	PF(Prefix)SR-600-400	PF(Prefix)RR-600-400
	500	PF(Prefix)LR-600-500	PF(Prefix)SR-600-500	PF(Prefix)RR-600-500
900	50	PF(Prefix)LR-900-050	PF(Prefix)SR-900-050	PF(Prefix)RR-900-050
	100	PF(Prefix)LR-900-100	PF(Prefix)SR-900-100	PF(Prefix)RR-900-100
	150	PF(Prefix)LR-900-150	PF(Prefix)SR-900-150	PF(Prefix)RR-900-150
	200	PF(Prefix)LR-900-200	PF(Prefix)SR-900-200	PF(Prefix)RR-900-200
	300	PF(Prefix)LR-900-300	PF(Prefix)SR-900-300	PF(Prefix)RR-900-300
	400	PF(Prefix)LR-900-400	PF(Prefix)SR-900-400	PF(Prefix)RR-900-400
	500	PF(Prefix)LR-900-500	PF(Prefix)SR-900-500	PF(Prefix)RR-900-500
	600	PF(Prefix)LR-900-600	PF(Prefix)SR-900-600	PF(Prefix)RR-900-600

Left Reducer LR

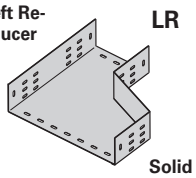

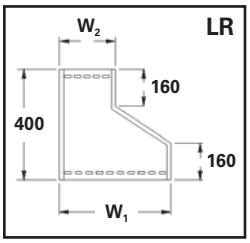

Straight Reducer SR

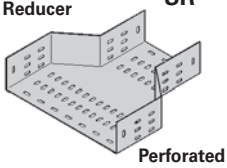

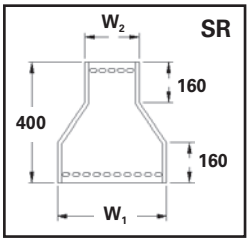

Right Reducer RR

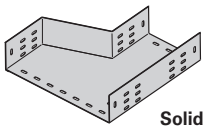

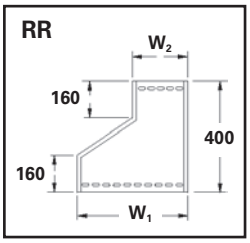

(Prefix) See page PS-11 for catalog number prefix and splice plate hole information.
Width dimensions are to inside wall. Manufacturing tolerances apply to all dimensions.

Note:
Perforated slot dimensions and patterns may vary depending on tray size and type.

Vertical Bends 90˚ (VO, VI)

Splice plates not supplied with fittings.
Order standard splice plates separately from page PS-8.
One (1) pair required to connect to system.

90˚ Vertical Outside

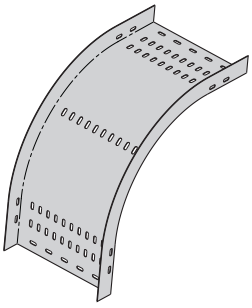

Perforated

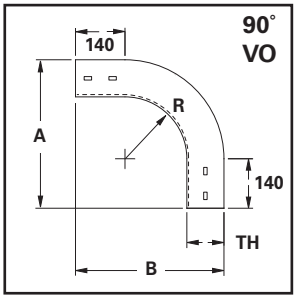

90˚ Vertical Inside

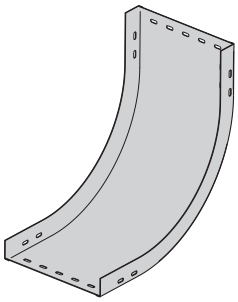

Solid

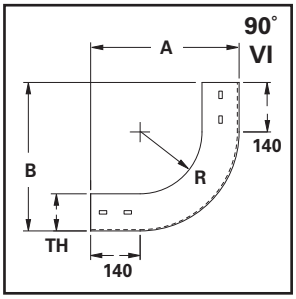

90˚

Bend Radius R	Tray Width	(*) Insert "VO" for Vert. Outside Bend "VI" for Vert. Inside Bend	VO & VI Tray Height (TH)							
			25mm		50mm		75mm		100mm	
			A	B	A	B	A	B	A	B
mm	mm	Catalog No.	mm	mm	mm	mm	mm	mm	mm	mm
	50	**PF(Prefix)(*)-050-90R300**	465	465	490	490	NA	NA	NA	NA
	100	**PF(Prefix)(*)-100-90R300**	465	465	490	490	515	515	540	540
	150	**PF(Prefix)(*)-150-90R300**	465	465	490	490	515	515	540	540
	200	**PF(Prefix)(*)-200-90R300**	465	465	490	490	515	515	540	540
300	300	**PF(Prefix)(*)-300-90R300**	465	465	490	490	515	515	540	540
	400	**PF(Prefix)(*)-400-90R300**	465	465	490	490	515	515	540	540
	500	**PF(Prefix)(*)-500-90R300**	465	465	490	490	515	515	540	540
	600	**PF(Prefix)(*)-600-90R300**	465	465	490	490	515	515	540	540
	900	**PF(Prefix)(*)-900-90R300**	NA	NA	490	490	515	515	540	540
	50	**PF(Prefix)(*)-050-90R600**	765	765	790	790	NA	NA	NA	NA
	100	**PF(Prefix)(*)-100-90R600**	765	765	790	790	815	815	840	840
	150	**PF(Prefix)(*)-150-90R600**	765	765	790	790	815	815	840	840
	200	**PF(Prefix)(*)-200-90R600**	765	765	790	790	815	815	840	840
600	300	**PF(Prefix)(*)-300-90R600**	765	765	790	790	815	815	840	840
	400	**PF(Prefix)(*)-400-90R600**	765	765	790	790	815	815	840	840
	500	**PF(Prefix)(*)-500-90R600**	765	765	790	790	815	815	840	840
	600	**PF(Prefix)(*)-600-90R600**	765	765	790	790	815	815	840	840
	900	**PF(Prefix)(*)-900-90R600**	NA	NA	790	790	815	815	840	840

(Prefix) See page PS-11 for catalog number prefix and splice plate hole information.
Width dimensions are to inside wall. Manufacturing tolerances apply to all dimensions.

NA = Not Available

Vertical Bends 60˚ (VO, VI)

Splice plates not supplied with fittings.
Order standard splice plates separately from page PS-8.
One (1) pair required to connect to system.

Note:
Perforated slot dimensions and patterns may vary depending on tray size and type.

60˚ Vertical Outside

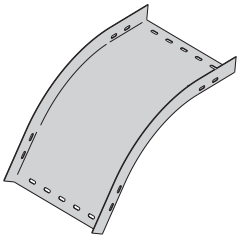

Solid

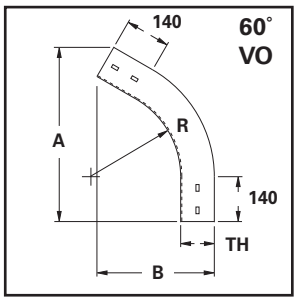

60˚ Vertical Inside

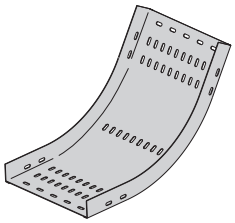

Perforated

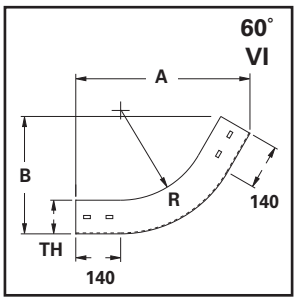

60˚

Bend Radius R	Tray Width	(*) Insert "VO" for Vert. Outside Bend "VI" for Vert. Inside Bend	VO & VI Tray Height (TH)							
			25mm		50mm		75mm		100mm	
			A	B	A	B	A	B	A	B
mm	mm	Catalog No.	mm	mm	mm	mm	mm	mm	mm	mm
	50	**PF(Prefix)(*)-050-60R300**	491	296	513	321	NA	NA	NA	NA
	100	**PF(Prefix)(*)-100-60R300**	491	296	513	321	535	346	556	371
	150	**PF(Prefix)(*)-150-60R300**	491	296	513	321	535	346	556	371
	200	**PF(Prefix)(*)-200-60R300**	491	296	513	321	535	346	556	371
300	300	**PF(Prefix)(*)-300-60R300**	491	296	513	321	535	346	556	371
	400	**PF(Prefix)(*)-400-60R300**	491	296	513	321	535	346	556	371
	500	**PF(Prefix)(*)-500-60R300**	491	296	513	321	535	346	556	371
	600	**PF(Prefix)(*)-600-60R300**	491	296	513	321	535	346	556	371
	900	**PF(Prefix)(*)-900-60R300**	NA	NA	513	321	535	346	556	371
	50	**PF(Prefix)(*)-050-60R600**	751	446	773	471	NA	NA	NA	NA
	100	**PF(Prefix)(*)-100-60R600**	751	446	773	471	795	496	816	521
	150	**PF(Prefix)(*)-150-60R600**	751	446	773	471	795	496	816	521
	200	**PF(Prefix)(*)-200-60R600**	751	446	773	471	795	496	816	521
600	300	**PF(Prefix)(*)-300-60R600**	751	446	773	471	795	496	816	521
	400	**PF(Prefix)(*)-400-60R600**	751	446	773	471	795	496	816	521
	500	**PF(Prefix)(*)-500-60R600**	751	446	773	471	795	496	816	521
	600	**PF(Prefix)(*)-600-60R600**	751	446	773	471	795	496	816	521
	900	**PF(Prefix)(*)-900-60R600**	NA	NA	773	471	795	496	816	521

(Prefix) See page PS-11 for catalog number prefix and splice plate hole information.
Width dimensions are to inside wall. Manufacturing tolerances apply to all dimensions.

NA = Not Available

Note:
Perforated slot dimensions and patterns may vary depending on tray size and type.

Vertical Bends 45˚ (VO, VI)

Splice plates not supplied with fittings.
Order standard splice plates separately from page PS-8.
One (1) pair required to connect to system.

45˚ Vertical Outside

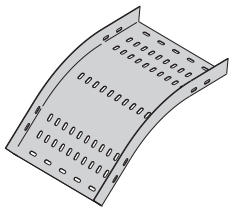

Perforated

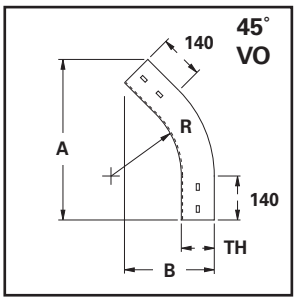

45˚ Vertical Inside

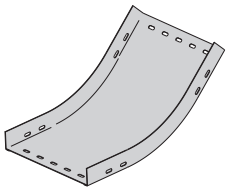

Solid

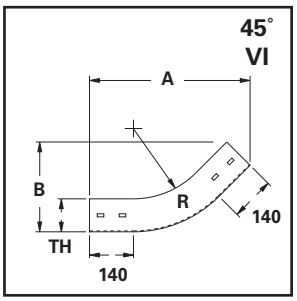

45˚

Bend Radius R	Tray Width	(*) Insert "VO" for Vert. Outside Bend "VI" for Vert. Inside Bend Catalog No.	VO & VI Tray Height (TH)							
			25mm		50mm		75mm		100mm	
			A	B	A	B	A	B	A	B
mm	mm		mm	mm	mm	mm	mm	mm	mm	mm
300	50	PF(Prefix)(*)-050-45R300	469	212	486	237	NA	NA	NA	NA
	100	PF(Prefix)(*)-100-45R300	469	212	486	237	504	262	522	287
	150	PF(Prefix)(*)-150-45R300	469	212	486	237	504	262	522	287
	200	PF(Prefix)(*)-200-45R300	469	212	486	237	504	262	522	287
	300	PF(Prefix)(*)-300-45R300	469	212	486	237	504	262	522	287
	400	PF(Prefix)(*)-400-45R300	469	212	486	237	504	262	522	287
	500	PF(Prefix)(*)-500-45R300	469	212	486	237	504	262	522	287
	600	PF(Prefix)(*)-600-45R300	469	212	486	237	504	262	522	287
	900	PF(Prefix)(*)-900-45R300	NA	NA	486	237	504	262	522	287
600	50	PF(Prefix)(*)-050-45R600	681	300	699	325	NA	NA	NA	NA
	100	PF(Prefix)(*)-100-45R600	681	300	699	325	716	350	734	375
	150	PF(Prefix)(*)-150-45R600	681	300	699	325	716	350	734	375
	200	PF(Prefix)(*)-200-45R600	681	300	699	325	716	350	734	375
	300	PF(Prefix)(*)-300-45R600	681	300	699	325	716	350	734	375
	400	PF(Prefix)(*)-400-45R600	681	300	699	325	716	350	734	375
	500	PF(Prefix)(*)-500-45R600	681	300	699	325	716	350	734	375
	600	PF(Prefix)(*)-600-45R600	681	300	699	325	716	350	734	375
	900	PF(Prefix)(*)-900-45R600	NA	NA	699	325	716	350	734	375

(Prefix) See page PS-11 for catalog number prefix and splice plate hole information.
Width dimensions are to inside wall. Manufacturing tolerances apply to all dimensions.

NA = Not Available

Vertical Bends 30˚ (VO, VI)

Splice plates not supplied with fittings.
Order standard splice plates separately from page PS-8.
One (1) pair required to connect to system.

Note:
Perforated slot dimensions and patterns may vary depending on tray size and type.

30˚ Vertical Outside

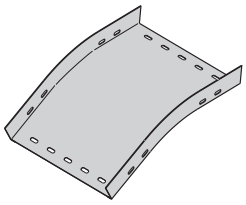

Solid

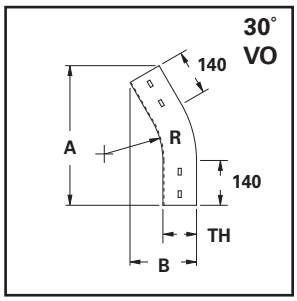

30˚ Vertical Inside

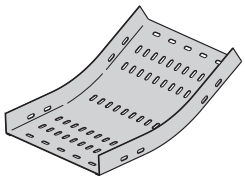

Perforated

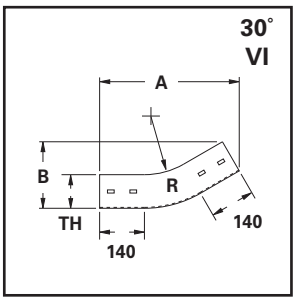

30˚

Bend Radius R	Tray Width	(*) Insert "VO" for Vert. Outside Bend "VI" for Vert. Inside Bend	VO & VI Tray Height (TH)							
			25mm		50mm		75mm		100mm	
			A	B	A	B	A	B	A	B
mm	mm	Catalog No.	mm	mm	mm	mm	mm	mm	mm	mm
	50	**PF(Prefix)(*)-050-30R300**	424	135	436	160	NA	NA	NA	NA
	100	**PF(Prefix)(*)-100-30R300**	424	135	436	160	449	185	461	210
	150	**PF(Prefix)(*)-150-30R300**	424	135	436	160	449	185	461	210
	200	**PF(Prefix)(*)-200-30R300**	424	135	436	160	449	185	461	210
300	300	**PF(Prefix)(*)-300-30R300**	424	135	436	160	449	185	461	210
	400	**PF(Prefix)(*)-400-30R300**	424	135	436	160	449	185	461	210
	500	**PF(Prefix)(*)-500-30R300**	424	135	436	160	449	185	461	210
	600	**PF(Prefix)(*)-600-30R300**	424	135	436	160	449	185	461	210
	900	**PF(Prefix)(*)-900-30R300**	NA	NA	436	160	449	185	461	210
	50	**PF(Prefix)(*)-050-30R600**	574	175	586	200	NA	NA	NA	NA
	100	**PF(Prefix)(*)-100-30R600**	574	175	586	200	599	225	611	250
	150	**PF(Prefix)(*)-150-30R600**	574	175	586	200	599	225	611	250
	200	**PF(Prefix)(*)-200-30R600**	574	175	586	200	599	225	611	250
600	300	**PF(Prefix)(*)-300-30R600**	574	175	586	200	599	225	611	250
	400	**PF(Prefix)(*)-400-30R600**	574	175	586	200	599	225	611	250
	500	**PF(Prefix)(*)-500-30R600**	574	175	586	200	599	225	611	250
	600	**PF(Prefix)(*)-600-30R600**	574	175	586	200	599	225	611	250
	900	**PF(Prefix)(*)-900-30R600**	N/A	N/A	586	200	599	225	611	250

(Prefix) See page PS-11 for catalog number prefix and splice plate hole information.
Width dimensions are to inside wall. Manufacturing tolerances apply to all dimensions.

NA = Not Available

Straight Section Covers

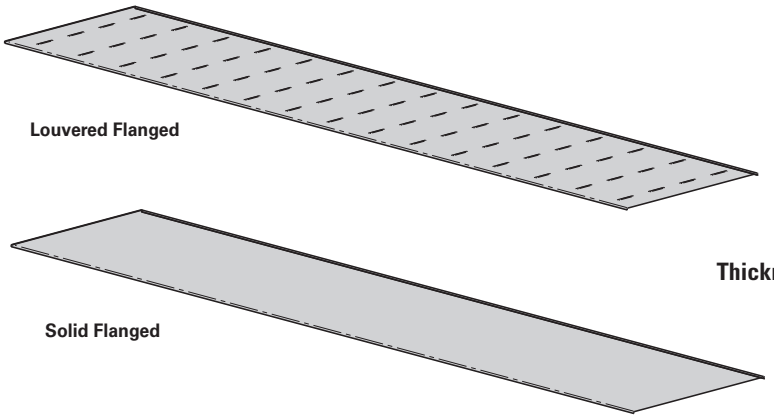

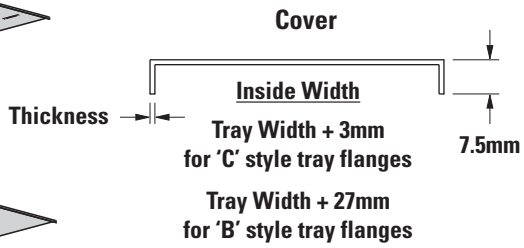

A full range of covers is available for straight sections.

Solid flanged covers should be used when maximum enclosure of the cable is desired and no accumulation of heat is expected.

Louvered flanged covers should be used when heat dissipation is required.

Flanged covers have a 7.5mm flange.

Cover clamps are not included with the cover and must be ordered separately.

Straight Section Cover Part Numbering

Prefix — Suffix

Example: **PCF S C P15 SS - 300 - 3000**

Cover Type	Top Style	Tray Flange Type	Material & Thickness	Cover Type	Width	Length
PCF = (Flanged Tray Cover)	**S** = Solid **L** = Louvered	**C** = Inside Flange **B** = Outside Flange	**P15** = Pre-Galv, 1.5mm **G12** = HDGAF, 1.2mm * **G15** = HDGAF, 1.5mm * **SS615** = Stainless, 1.5mm Type 316 **A10** = Aluminum, 1.0mm	**SS** = Straight Section	**050** = 50mm **100** = 100mm **150** = 150mm **200** = 200mm **300** = 300mm **400** = 400mm **500** = 500mm **600** = 600mm **900** = 900mm	**1500** = 1.5m * **3000** = 3.0m

* Hot-Dip Galvanized covers offered in 1.5m lengths only.

All dimensions are in millimeters unless otherwise specified.

Fitting Covers

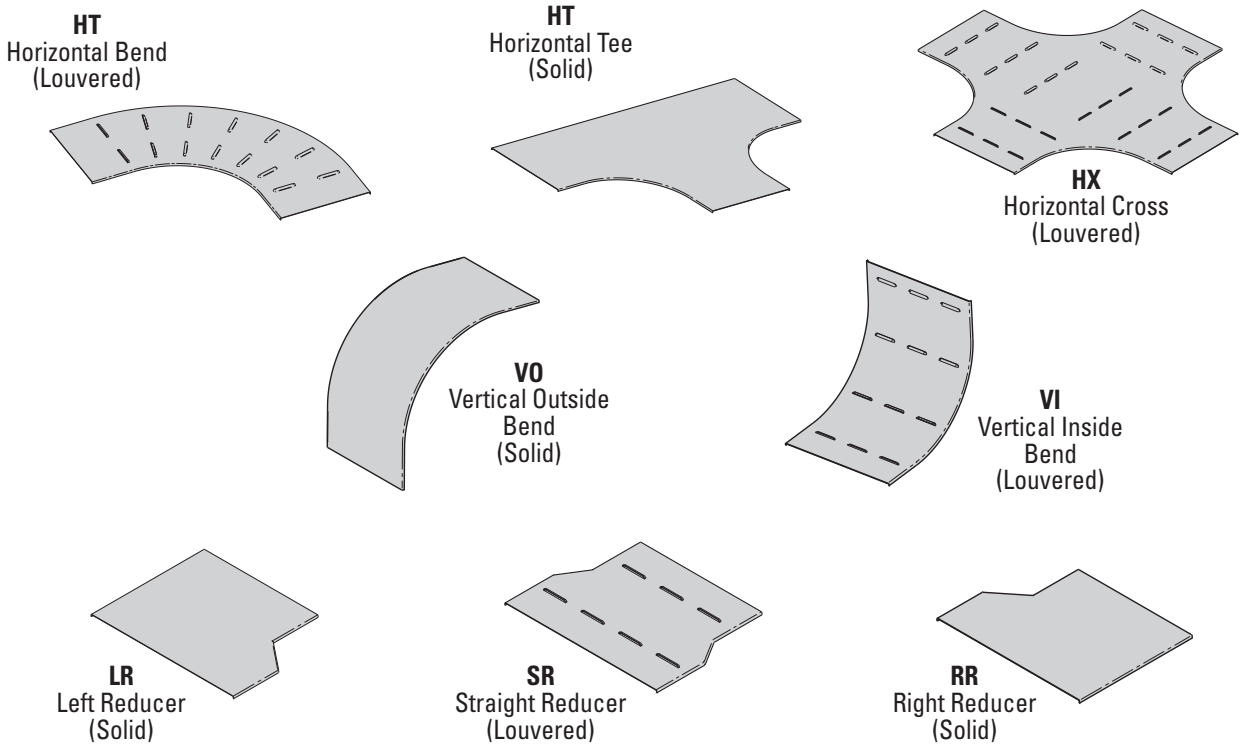

A full range of covers are available for fittings.

Solid flanged covers should be used when maximum enclosure of the cable is desired and no accumulation of heat is expected.

Louvered flanged covers should be used when heat dissipation is required.

Flanged covers have a 7.5mm flange.
Cover clamps are not included with the cover and must be ordered separately.

Fitting Cover Part Numbering

Prefix | Suffix

Example: **PCF S P15 HB - 500 - 60 R600 - 050** **(side rail height)**

Cover Type

PCF = **(Perforated & Solid Tray Fitting Cover)**

Top Style

S = Solid

L = Louvered

Material & Thickness

P15 = Pre-Galv, 1.5mm
G12 = HDGAF, 1.2mm
G15 = HDGAF, 1.5mm
SS615 = Stainless, 1.5mm Type 316
A10 = Aluminum, 1.0mm

HB **Insert HB Suffix from pages PS-12 – PS-15**
HT **Insert HT Suffix from pages PS-16**
HX **Insert HX Suffix from pages PS-17**
LR **Insert LR Suffix from pages PS-18**
SR **Insert SR Suffix from pages PS-18**
RR **Insert SR Suffix from pages PS-18**
VI **Insert VI Suffix from pages PS-19 – PS-22**
VO **Insert VO Suffix from pages PS-19 – PS-22 & Side Rail Height**

All dimensions are in millimeters unless otherwise specified.

Steel Cable Ladder Series 1

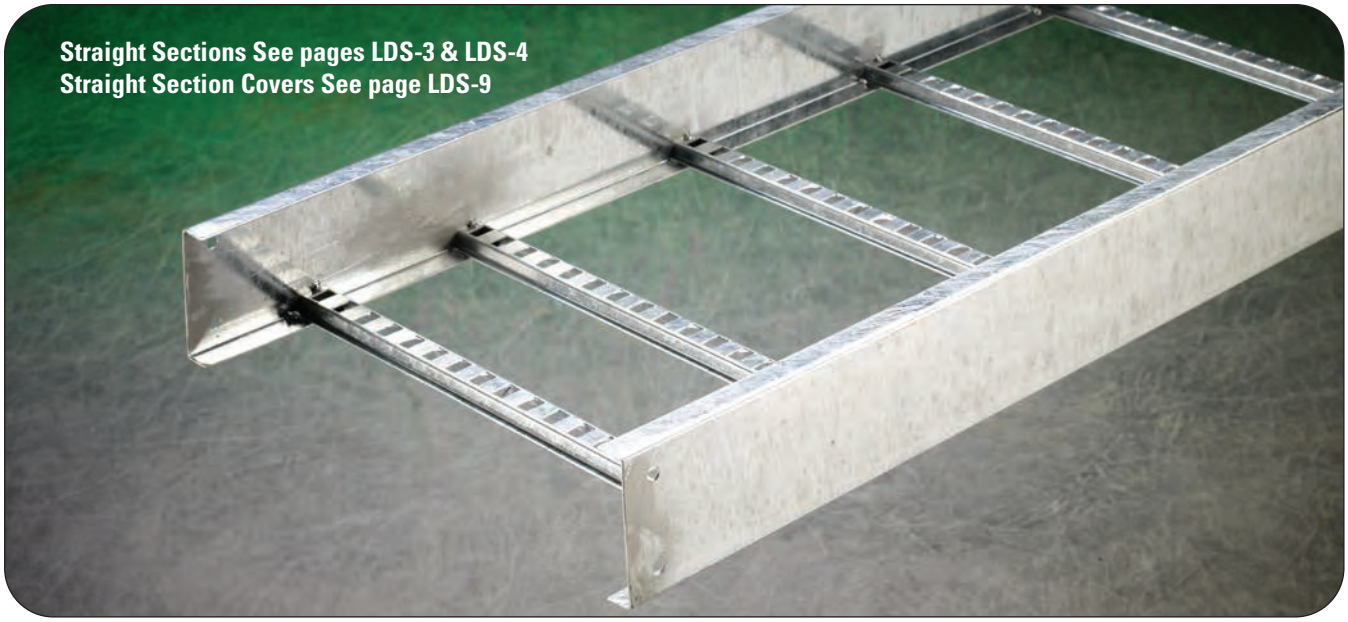

Steel Cable Ladder, Series 1

Side Rails

B-Line C-Shape Side Rail - designed for lighter duty applications

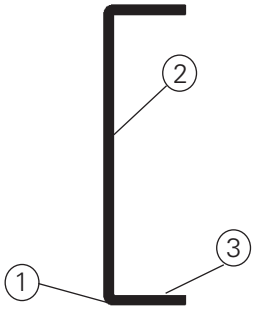

1. **Roll formed for extra strength**
2. **C-Shape side rail designed for lighter duty applications**
3. **Positive Rung Support**

Splices -- providing system integrity

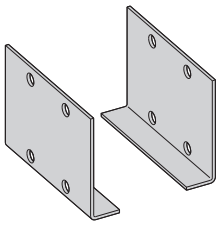

Standard Splices -- the engineered connection:
- High strength steel
- Four bolt connection to maintain strength and save labor

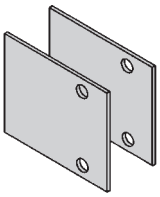

Universal Splice Plate
- Easy installation to existing cable ladder systems
- Provided in pairs with universal hardware

Reliable time-tested products
- 200 lb. Concentrated Load- side rail and rungs
- Splice integrity - 3" fitting tangents
- Slotted rung options allows for easy cable tie installation

Series 148 - 3" (76mm) Loading Depth
Actual Side Rail Height - 3.625" (92mm)

Series 156 - 4" (101mm) Loading Depth
Actual Side Rail Height - 4.188" (106mm)

Series 166 - 5" (127mm) Loading Depth
Actual Side Rail Height - 5.188" (132mm)

Series 166 - 6" (152mm) Loading Depth
Actual Side Rail Height - 6.188" (158mm)

Straight Section Part Numbering

Prefix Suffix

Example: **156 P 09 SL - 24 - 144**

Series	Material	Rung Spacing	Rung Type	Width	Length
148	**P** = Pre-Galvanized Steel	**Ladder**	**(Blank)** - Non-Slotted	**06** = 6" (152)	**144** = 12 ft. (3.7m)
156	**G** = Hot Dip Galvanized After Fabrication Steel	**06** = 6" (152)		**09** = 9" (228)	120 = 10 ft. (3.0m)
166		**09** = 9" (228)	**SL** - Slotted	**12** = 12" (305)	
176		**12** = 12" (305)		**18** = 18" (457)	
				24 = 24" (609)	
				30 = 30" (762)	
				36 = 36" (914)	

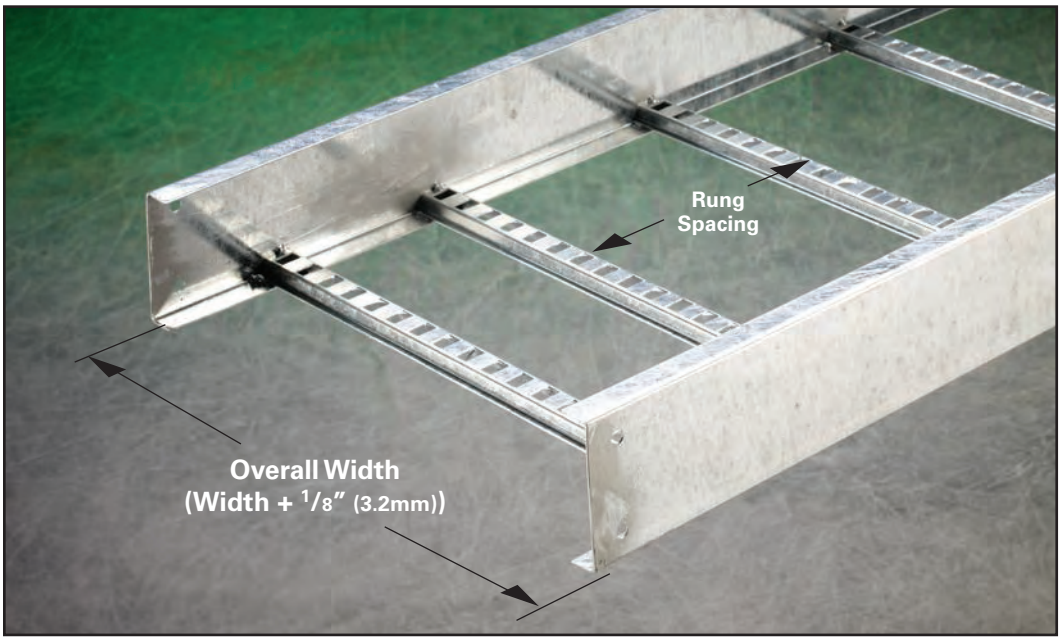

Shown with slotted rung (SL) type option.

Dimensional & Loading Information

Values are based on simple beam tests per NEMA VE 1 on 36" (914mm) wide cable ladder with rungs spaced on 12" (305mm) centers. The published load safety factor is 1.5. To convert 1.5 safety factor to 2.0, multiply the published load by 0.75. To obtain mid-span deflection, multiply a load by the deflection multiplier. Cable ladder must be supported on spans shorter than or equal to the length of the cable ladder being installed. When ladders are used in continuous spans, the deflection of the ladder is reduced by as much as 50%.

Series 148 - 3" (76mm) Loading Depth

B-Line Series	Side Rail Dimensions	NEMA, CSA & UL Classifications	Span ft	Span meters	Load lbs/ft	Load kg/m	Deflection Multiplier		Design Factors for Two Rails	
148	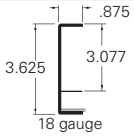	NEMA: 12A, 8C	6	1.8	204*	304*	0.0011	0.019	Area=0.51 in²	Area=3.29 cm²
		CSA: C1-3m	8	2.4	115	171	0.0036	0.061	Sx=0.48 in³	Sx=7.87 cm³
		UL Cross-Sectional	10	3.0	73	109	0.0087	0.149	Ix=0.89 in⁴	Ix=37.04 cm⁴
		Area: 0.40 in²	12	3.7	51	76	0.0181	0.309		

*When using 12" (305mm) rung spacing load capacity is limited to 195 lbs/ft (290.16 kg/m) for 36" (914mm) ladder width.

Series 156 - 4" (101mm) Loading Depth

B-Line Series	Side Rail Dimensions	NEMA, CSA & UL Classifications	Span ft	Span meters	Load lbs/ft	Load kg/m	Deflection Multiplier		Design Factors for Two Rails	
156	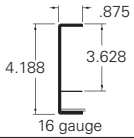	NEMA: 12B, 8C	6	1.8	304*	452*	0.0007	0.011	Area=0.68 in²	Area=4.39 cm²
		CSA: C1-3m	8	2.4	171	254	0.0021	0.036	Sx=0.724 in³	Sx=11.86 cm³
		UL Cross-Sectional	10	3.0	109	163	0.0051	0.087	Ix=1.517 in⁴	Ix=63.14 cm⁴
		Area: 0.40 in²	12	3.7	76	113	0.0110	0.181		

Cable ladder will support without collapse a 200 lb. (90.7 kg) concentrated load over and above the published loads.
*When using 12" (305mm) rung spacing, load capacity is limited to 234 lbs/ft (348.192 kg/m) for 30" (762mm) ladder width and 195 lbs/ft (290.16 kg/m) for 36" (914mm) ladder width.

Series 166 - 5" (127mm) Loading Depth

B-Line Series	Side Rail Dimensions	NEMA, CSA & UL Classifications	Span ft	Span meters	Load lbs/ft	Load kg/m	Deflection Multiplier		Design Factors for Two Rails	
166	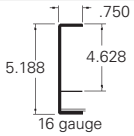	NEMA: 12B, 8C	6	1.8	308*	458*	0.0004	0.007	Area=0.77 in²	Area=4.97 cm²
		CSA: C1-3m	8	2.4	173	258	0.0013	0.033	Sx=0.93 in³	Sx=15.24 cm³
		UL Cross-Sectional	10	3.0	111	165	0.0032	0.055	Ix=2.40 in⁴	Ix=99.90 cm⁴
		Area: 0.70 in²	12	3.7	77	115	0.0067	0.114		

Cable ladder will support without collapse a 200 lb. (90.7 kg) concentrated load over and above the published loads.
*When using 12" (305mm) rung spacing, load capacity is limited to 234 lbs/ft (348.192 kg/m) for 30" (762mm) ladder width and 195 lbs/ft (290.16 kg/m) for 36" (914mm) ladder width.

Series 176 - 6" (152mm) Loading Depth

B-Line Series	Side Rail Dimensions	NEMA, CSA & UL Classifications	Span ft	Span meters	Load lbs/ft	Load kg/m	Deflection Multiplier		Design Factors for Two Rails	
176	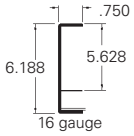	NEMA: 12B, 8C	8	2.4	194	288	0.0008	0.014	Area=0.89 in²	Area=5.74 cm²
		CSA: C1-3m	10	3.0	124	184	0.0020	0.035	Sx=1.23 in³	Sx=20.16 cm³
		UL Cross-Sectional	12	3.7	86	128	0.0042	0.072	Ix=3.80 in⁴	Ix=158.20 cm⁴
		Area: 0.70 in²								

Cable ladder will support without collapse a 200 lb. (90.7 kg) concentrated load over and above the published loads.

Design factors: Ix = Moment of Inertia, Sx = Section Modulus.

Series 1 Steel

Dimensions in parentheses are in millimeters unless otherwise specified.

Steel Cable Ladder Series 1

Standard (L-Shaped) Splice Plates

- One pair including hardware provided with each ladder section.
- Furnished in pairs with hardware.
- Prepackaged in pairs in a plastic bag, with hardware.
- 4-hole pattern L-shaped splice plates.
- L-shaped lay-in design.
- (*) Insert ZN or G

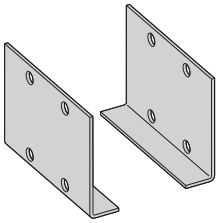

Ladder Series	Catalog No.
148	**9(*)-4004**
156	**9(*)-4005**
166	**9(*)-4006**
176	**9(*)-4007**

Expansion (L-Shaped) Splice Plates

- Expansion plates allow for one inch expansion or contraction of the cable ladder, or where expansion joints occur in the supporting structure.
- **Bonding Jumpers are required. Part # 99-N1. Order Separately.**
- L-shaped lay-in design.
- Furnished in pairs with hardware.
- (*) Insert ZN or G

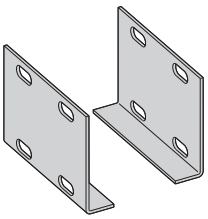

Ladder Series	Catalog No.
148	**9(*)-4014**
156	**9(*)-4015**
166	**9(*)-4016**
176	**9(*)-4017**

Universal Splice Plates

- Used to splice to existing cable ladder systems.
- Furnished in pairs with hardware.
- (*) Insert P or G

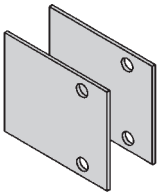

Ladder Series	Catalog No.
148	**9(*)-2004-1/2**
156	**9(*)-2005-1/2**
166	**9(*)-2006-1/2**
176	**9(*)-2007-1/2**

Step Down Splice Plates

- These splice plates are offered for connecting cable ladder sections having side rails of different heights.
- Furnished in pairs with hardware.
- (*) Insert ZN or G

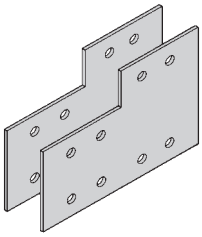

Ladder Series	Catalog No.
148	**9(*)-8004**
156	**9(*)-8045**
166	**9(*)-8046**
176	**9(*)-8060**

Vertical Adjustable Splice Plates

- These plates provide for changes in elevation that do not conform to standard vertical fittings.
- Furnished in pairs with hardware.
- (*) Insert ZN or G

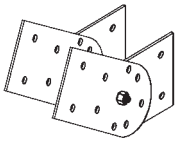

Requires supports within 24" (609mm) on both sides, per NEMA VE 2.

Ladder Series	Catalog No.
148	**9(*)-7024**
156	**9(*)-8024**
166	**9(*)-8025**
176	**9(*)-8026**

Horizontal Adjustable Splice Plates

- Offered to adjust a cable ladder run for changes in direction in a horizontal plane that do not conform to standard horizontal fittings.
- Furnished in pairs with hardware.
- New design bonding jumpers **not** required.
- (*) Insert ZN or G
- (X) Insert 4 for series 148 or 156
  5 for series 166
  6 for series 176

9(*)-803(X)
Splices only

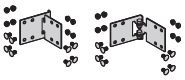

Requires supports within 24" (609mm) on both sides, per NEMA VE 2.

9(*)-803(X)-12 or 9(*)-803(X)-36
One pair splice plates with extensions.

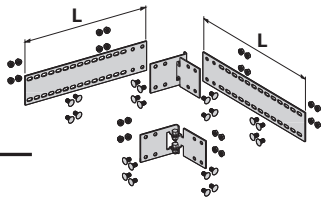

Catalog No.	Ladder End Cut	Ladder Width	'L'
9(*)-803(X)	Mitered	Thru 36" (914)	N/A
9(*)-803(X)-12	Not mitered	Thru 12" (305)	16" (406)
9(*)-803(X)-36	Not mitered	Thru 36" (914)	41" (1041)

Dimensions in parentheses are in millimeters unless otherwise specified.

Offset Reducing Splice Plate

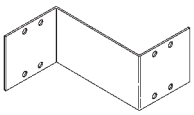

- This plate is used for joining cable ladders having different widths. When used in pairs they form a straight reduction; when used with a standard splice plate they form an offset reduction.
- Furnished as one plate with hardware.
- (*) Insert P or G
- (‡) Insert reduction number, shown bold, in the Reduction Chart below.

Left or right reductions (LR/RR) require one offset reducing splice plate and one standard splice plate

Straight reduction (SR) requires two offset reducing splice plates

Ladder Series	Catalog No.
148	**9(*)-8064-(‡)**
156	**9(*)-8064-(‡)**
166	**9(*)-8065-(‡)**
176	**9(*)-8066-(‡)**

Reduction Chart

Reducing From Width Of		To Width Of											
		30" (762mm)		24" (609mm)		18" (457mm)		12" (305mm)		9" (228mm)		6" (152mm)	
in.	(mm)	LR/RR	SR	LR/RR	SR	LR/RR	SR	LR/RR	SR	LR/RR	SR	LR/RR	SR
36	(914)	**6**	**3**	**12**	**6**	**18**	**9**	**24**	**12**	**27**	**13.5**	**30**	**15**
30	(762)	–	–	**6**	**3**	**12**	**6**	**18**	**9**	**21**	**10.5**	**24**	**12**
24	(609)	–	–	–	–	**6**	**3**	**12**	**6**	**15**	**7.5**	**18**	**9**
18	(457)	–	–	–	–	–	–	**6**	**3**	**9**	**4.5**	**12**	**6**
12	(305)	–	–	–	–	–	–	–	–	**3**	**1.5**	**6**	**3**
9	(228)	–	–	–	–	–	–	–	–	–	–	**3**	**1.5**

Ladder to Box Splice Plates

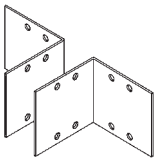

- Used to attach the end of a cable ladder to a distribution box, wall, or control panel.
- Furnished in pairs with hardware.
- (*) Insert P or G

Ladder Series	Catalog No.
148	**9(*)-8054**
156	**9(*)-8054**
166	**9(*)-8055**
176	**9(*)-8056**

Frame Type Box Connector

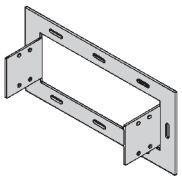

- Designed to attach the end of a cable ladder run to a distribution cabinet or control center to help reinforce the box at the point of entry.
- Furnished with ladder connection hardware.
- (‡) Insert ladder width
- (*) Insert P or G

Ladder Series	Catalog No.
148	**9(*)-8074-(‡)**
156	**9(*)-8074-(‡)**
166	**9(*)-8075-(‡)**
176	**9(*)-8076-(‡)**

Blind End

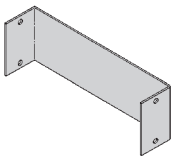

- This plate forms a closure for a dead end cable ladder.
- Furnished as one plate with hardware.
- (‡) Insert ladder width
- (*) Insert P or G

Ladder Series	Catalog No.
148	**9(*)-8084-(‡)**
156	**9(*)-8084-(‡)**
166	**9(*)-8085-(‡)**
176	**9(*)-8086-(‡)**

Ladder Hardware

Pre-Galvanized Ladder Hardware	Hot Dip Galvanized Ladder Hardware
Catalog No. RNCB 3/8"-16 x 3/4" ZNPLT Ribbed Neck Carriage Bolt ASTM A307 Grade A	**Catalog No. RNCB 3/8"-16 x 3/4" CZ** Ribbed Neck Carriage Bolt Chromium Zinc ASTM F-1136-88
Catalog No. SFHN 3/8"-16 ZNPLT Serrated Flange Hex Nut ASTM A563 Grade A	**Catalog No. SFHN 3/8"-16 CZ** Serrated Flange Hex Nut Chromium Zinc ASTM F-1136-88

Finish: Zinc Plated ASTM B633, SC1

Dimensions in parentheses are in millimeters unless otherwise specified.

Steel Cable Ladder Series 1

Conduit to Ladder Adaptor

- For easy attachment of conduit terminating at a cable ladder.
- Use on aluminum or steel cable ladders.

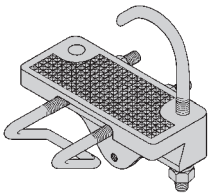

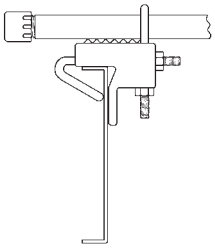

Catalog No.	Conduit Size in.	Conduit Size mm
9G-1158-1/2, 3/4	1/2, 3/4	15, 20
9G-1158-1, 1 1/4	1, 1 1/4	25, 32
9G-1158-1 1/2, 2	1 1/2, 2	40, 50
9G-1158-2 1/2, 3	2 1/2, 3	65, 80
9G-1158-3 1/2, 4	3 1/2, 4	90, 100

Cable Ladder Clamp/Guide

- Features a no-twist design.
- Has four times the strength of the traditional design.
- Each side is labeled to ensure proper installation.
- Furnished in pairs, with or without hardware.

Patent # RE35479

Catalog No. Without Hardware	Catalog No. With Hardware	Overall Length in.	Overall Length mm	Hardware Size	Finish
9ZN-1204	**9ZN-1204NB**	1 1/2	(38)	1/4"	ZNPLT
9ZN-1208	**9ZN-1208NB**	2 1/4	(57)	3/8"	ZNPLT

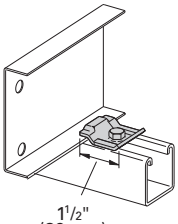

9ZN-1204 shown.
Installed as a guide.

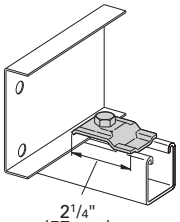

9ZN-1208 shown.
Installed as a clamp.

Ground Wire Clamp

- Mechanically attaches grounding cables to cable ladder.
- Hardware included.
- (*) Insert ZN or SS4

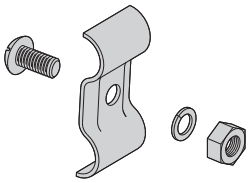

Catalog No.	Cable Size
9(*)-2351	#1 thru 2/0
9(*)-2352	3/0 thru 250 MCM

Grounding Clamp

B-Line Cable Ladder is UL® classified as to its suitability as an equipment grounding conductor. If a separate conductor for additional grounding capability is desired, B-Line offers this clamp for bolting the conductor at least once to each ladder section.

- Accepts #6 AWG to 250 MCM.

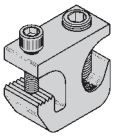

Catalog No.	Material	Item
9A-2130	Tin Plated Aluminum	Grounding Clamp

Bonding Jumper

Use at each expansion splice and where the cable ladder is not mechanically/electrically continuous to ground.
Sold individually.

- Hardware included.
- See table 392.7(B)(2) on page CLS-9 for amperage ratings required to match the UL cross-sectional area of the ladder.
- 600 amp rating.
- Bonding jumper is 16" (406) long.

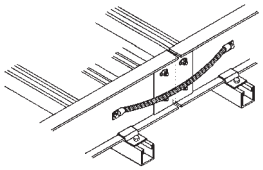

Catalog No.	Cross-Sectional Area	Ampacity
99-N1	0.40 Square inches	600

Threaded Rod (ATR) & Rod Coupling

Loading based on safety factor 5.
Standard Finish: Zinc plated

B655

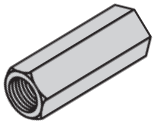

ATR

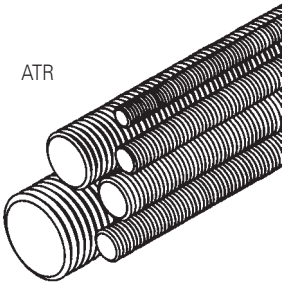

Size	Loading lbs.	Loading (kN)	Catalog No.	Available Lengths	Coupling Cat. No.
3/8-16	730	(3.24)	**ATR 3/8 x Length**	36" (914), 72" (1829), 120" (3048), 144" (3657)	**B655-3/8**
1/2-13	1350	(6.00)	**ATR 1/2 x Length**	36" (914), 72" (1829), 120" (3048), 144" (3657)	**B655-1/2**

Dimensions in parentheses are in millimeters unless otherwise specified.

Hanger Rod Clamp

- For 1/2" ATR.
- Furnished in pairs.
- Order ATR and hex nuts separately.
- Two piece "J"-hanger design.
- 9ZN-1113 has 275 lbs. (1.22kN)/pair safety factor 3 capacity.
- 9ZN-532(X) has 1500 lbs. (6.67kN)/pair capacity safety factor 3.

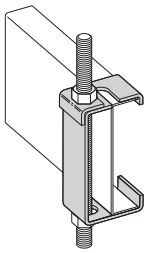

Ladder Series	Catalog No.
148	**9ZN-1113**
156	**9ZN-5324**
166	**9ZN-5325**
176	**9ZN-5326**

Ladder Drop-Out

- Easy to install drop-out provides a 4" (101.6 mm) radius to protect cables exiting the cable ladder from damage.
- Attaches to a ladder rung.
- Hardware included.
- (*) Insert P or G
- (‡) Insert ladder width

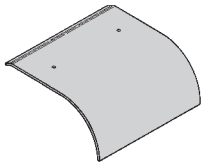

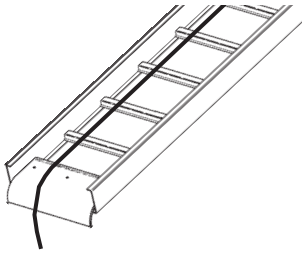

Catalog No.
9(*)-1104T-(‡)

Straight Section Barriers

- Standard length: 120" (3m) 144" (12 ft.).
- Order catalog number based on loading depth.
- Furnished with four #10 x 1/2" plated self-drilling screws and a 99-9982 splice.
- (*) Insert P or G
- † Insert ladder length of 120 or 144

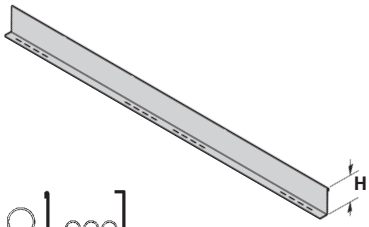

Ladder Series	Catalog No.	H in.	H (mm)
148	**72(*)-Length†**	2.8	(58)
156	**737(*)-Length†**	3.4	(70)
166	**747(*)-Length†**	4.4	(91)
176	**757(*)-Length†**	5.4	(112)

Length = 144 for 12'-0" or 120 for 10'-0"

Horizontal Bend Barriers

- Horizontal Bend Barriers are flexible to conform to any horizontal fitting radius. Cut to length.
- Order catalog number based on loading depth.
- Furnished with three #10 x 1/2" zinc plated self-drilling screws and a 99-9982 Barrier Strip Splice.
- Standard length is 72" (1828mm) (6 ft.), sold individually.
- (*) Insert P or G

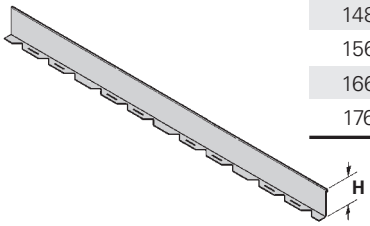

Ladder Series	Catalog No.	H in.	H (mm)
148	**72(*)-90HBFL**	2.8	(58)
156	**737(*)-90HBFL**	3.4	(70)
166	**747(*)-90HBFL**	4.4	(91)
176	**757(*)-90HBFL**	5.4	(112)

Vertical Bend Barriers

- Vertical Bend Barriers are preformed to conform to a specific vertical fitting.
- Furnished with three #10 x 1/2" plated self-drilling screws and a 99-9982 Barrier Strip Splice.
- (*) Insert P or G
- (**) Insert 30, 45, 60 or 90 for degrees
- (†) Insert 12 or 24 for radius

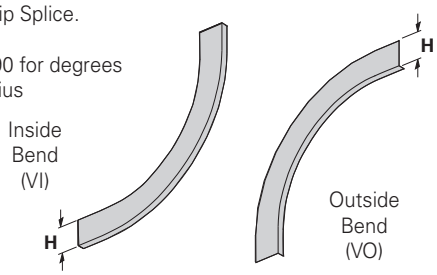

Ladder Series	Catalog No. Inside Bend	Catalog No. Outside Bend	H in.	H (mm)
148	**72(*)-(**)VI(†)**	**72(*)-(**)VO(†)**	2.8	(58)
156	**737(*)-(**)VI(†)**	**737(*)-(**)VO(†)**	3.4	(70)
166	**747(*)-(**)VI(†)**	**747(*)-(**)VO(†)**	4.4	(91)
176	**757(*)-(**)VI(†)**	**757(*)-(**)VO(†)**	5.4	(112)

Barrier Strip Splice

- Plastic splice holds adjoining barrier strips in straight alignment.

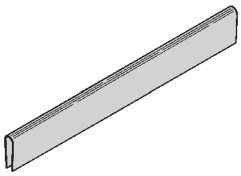

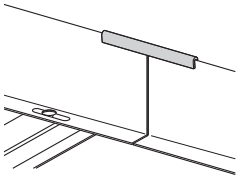

Catalog No.
99-9982

Dimensions in parentheses are in millimeters unless otherwise specified.

Covers

Solid covers should be used when maximum enclosure of the cables is desired and no accumulation of heat is expected.

Ventilated covers allow heat to escape.

B-Line recommends that covers on vertical cable ladder runs to a height of 6 ft. (1.83 m) to 8 ft. (2.44 m) above the floor to isolate both cables and personnel.

Flanged covers have a .30 in. (7.6 mm) flange.

Cover clamps are not included with the cover and must be ordered separately.

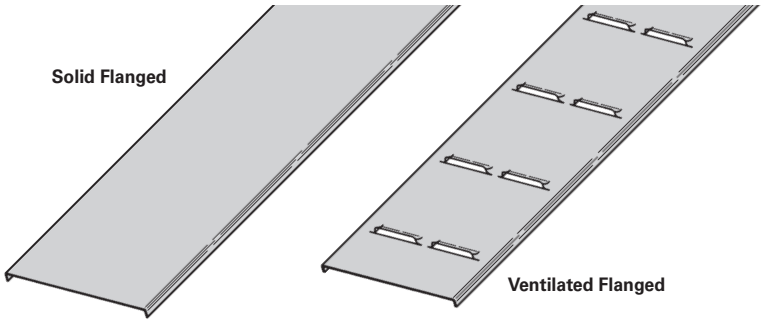

Straight Section Covers Part Numbering

Prefix

Example: **80 1 P - 20 - 24 - 144**

Cover Type	Detail	Material	Material Thickness	Ladder Width	Item Description
80 = Solid 81 = Ventilated	1 = Flanged	P = Pre-Galvanized G = HDGAF	20 = 20 Ga. Steel for Pre-Galvanized 18 = 18 Ga. Steel for HDGAF	06 = 6" (152) 09 = 9" (228) 12 = 12" (305) 18 = 18" (457) 24 = 24" (609) 30 = 30" (762) 36 = 36" (914)	For Straight Section Cover: **Pre-Galvanized Only:** 144 = 12 ft. (3.66 m) 120 = 10 ft. (3.05 m) **Pre-Galvanized & HDGAF** 72 = 6 ft. (1.83 m) 60 = 5 ft. (1.52 m) For fitting covers: Insert suffix of fitting to be covered. See example below.

Covers 30" and 36" wide have reinforcing ridges.

Quantity of Standard Cover Clamps Required

Straight Section 60" (1.52m) or 72" (1.83m)	4 pcs.
Straight Section 120" (3.05m) or 144" (3.66m)	6 pcs.
Horizontal/Vertical Bends	4 pcs.
Tees	6 pcs.
Crosses	8 pcs.

Note: When using the Heavy Duty Cover Clamp, only one-half the number of clamps stated above is required.

Fitting Covers

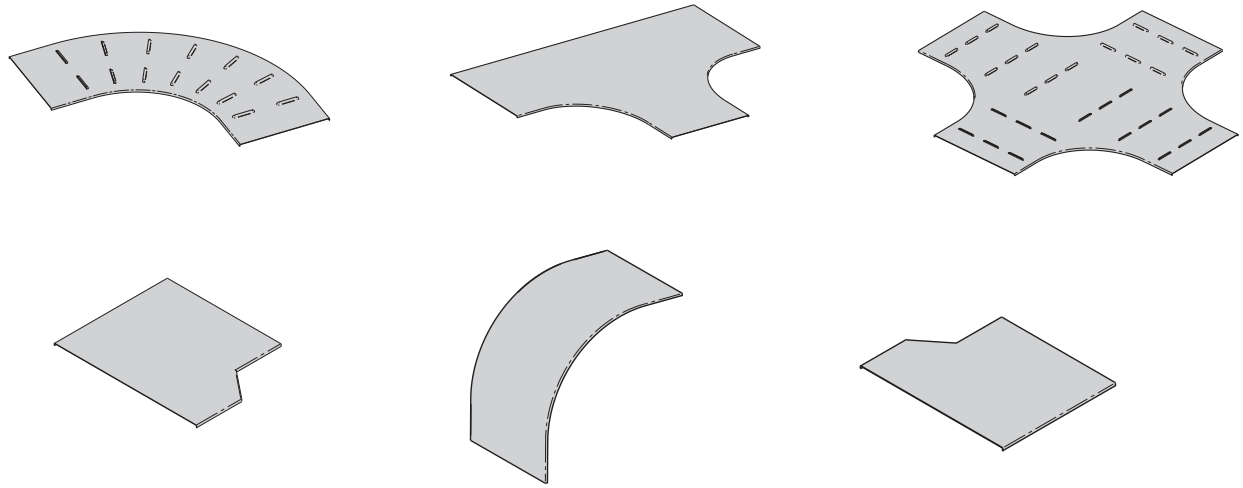

Fitting Covers Part Numbering

Prefix — Suffix

Example: **80 1 P - 20 - 06 - 90 HB 12 - 4** **(side rail height)**

Cover Type
80 = Solid
81 = Ventilated

Detail
1 = Flanged

Material
P = Pre-Galvanized
G = HDGAF

Material Thickness
20 = 20 Ga. Steel for Pre-Galvanized
18 = 18 Ga. Steel for HDGAF

HB **Insert HB Suffix from page LDS-13**
HT **Insert HT Suffix from page LDS-14**
HX **Insert HX Suffix from page LDS-14**
RR **Insert RR Suffix from page LDS-15**
LR **Insert LR Suffix from page LDS-15**
SR **Insert SR Suffix from page LDS-15**
VI **Insert VI Suffix from pages LDS-16 – LDS-19**
VO **Insert VO Suffix from pages LDS-16 – LDS-19 & Side Rail Height**

Dimensions in parentheses are in millimeters unless otherwise specified.

Standard Cover Clamp

- Sold per piece
- For indoor service only

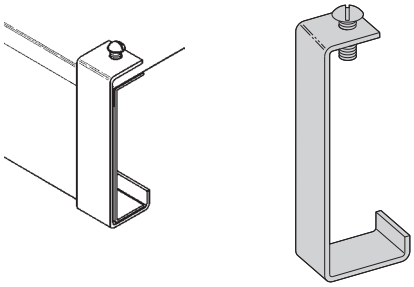

Ladder Series	Catalog No. Znplt	HDGAF
148	9ZN-9019	9G-9019
156	9ZN-9014	9G-9014
166	9ZN-9015	9G-9015
176	9ZN-9016	9G-9016

Combination Hold Down & Cover Clamp

- Sold per piece
- For indoor service only

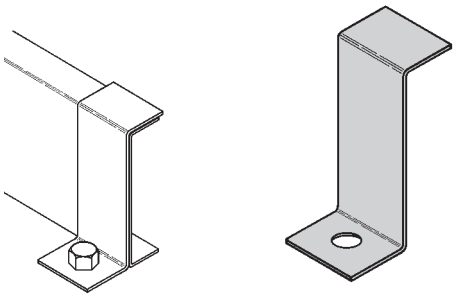

Ladder Series	Catalog No. Znplt/Pre-Galv	HDGAF
148	9ZN-9243	9G-9243
156	9P-9043	9G-9043
166	9P-9053	9G-9053
176	9P-9063	9G-9063

Heavy Duty Cover Clamp

- (‡) Insert ladder width

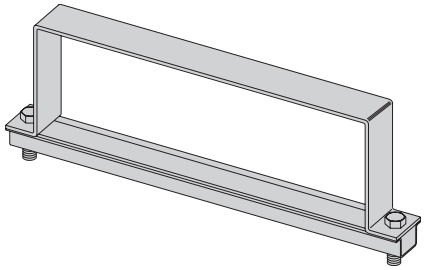

Ladder Series	Catalog No. Pre-Galv	HDGAF
148	9P-(‡)-9040	9G-(‡)-9040
156	9P-(‡)-9044	9G-(‡)-9044
166	9P-(‡)-9054	9G-(‡)-9054
176	9P-(‡)-9064	9G-(‡)-9064

Cover Joint Strip

- Used to join covers
- Plastic
- (‡) Insert ladder width

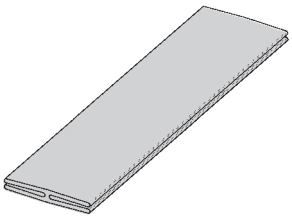

Catalog No.
99-9980-(‡)

Dimensions in parentheses are in millimeters unless otherwise specified.

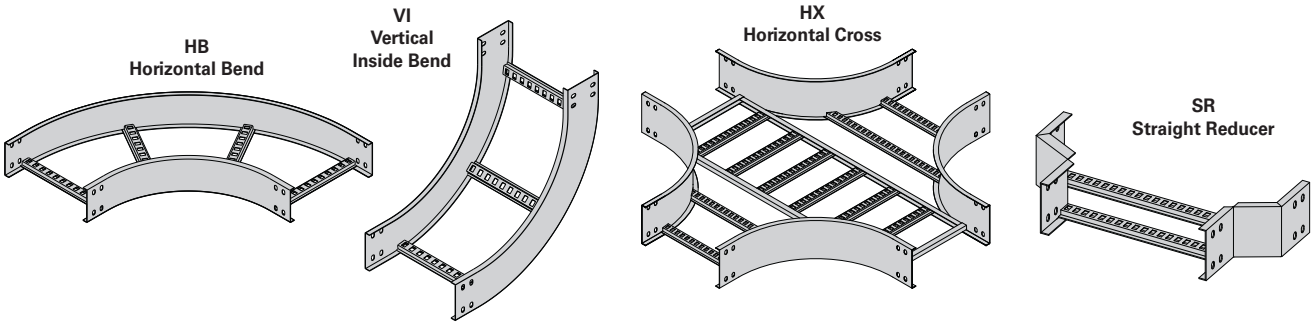

Fittings engineered with 3" (76mm) tangents for splicing integrity.

Fittings Part Numbering

Prefix / Suffix

Example: **1 4 P SL - 24 - 90 HB 24** (9" rung spacing is standard)

Series	Height	Material	Rung Type	Width	Angle†	Type	Radius
1	**4** = 148 **5** = 156 **6** = 166 **7** = 176	**P** = Pre-Galvanized **G** = HDGAF	**Blank** = Non-Slotted Rung **SL** = Slotted Rung	**06** = 6" (152) **09** = 9" (228) **12** = 12" (305) **18** = 18" (457) **24** = 24" (609) **30** = 30" (762) **36** = 36" (914)	**30** = 30° **45** = 45° **60** = 60° **90** = 90°	**HB** = Horizontal Bend **HT** = Horizontal Tee† **HX** = Horizontal Cross† **VI** = Vertical Inside Bend **VO** = Vertical Outside Bend	**12** = 12" (305) **24** = 24" (609) **36** = 36" (914)

† No angle designation required on these fitting covers.

Reducer Fittings Part Numbering

Prefix / Suffix

Example: **1 4 P SL - 30 - LR 12** (9" rung spacing is standard)

Series	Height	Material	Rung Type	Width 1	Type	Width 2
1	**4** = 148 **5** = 156 **6** = 166 **7** = 176	**P** = Pre-Galvanized **G** = HDGAF	**Blank** = Non-Slotted Rung **SL** = Slotted Rung	**09** = 9" (228) **12** = 12" (305) **18** = 18" (457) **24** = 24" (609) **30** = 30" (762) **36** = 36" (914)	**LR** = Left Reducer **RR** = Right Reducer **SR** = Straight Reducer	**06** = 6" (152) **09** = 9" (228) **12** = 12" (305) **18** = 18" (457) **24** = 24" (609) **30** = 30" (762)

Dimensions in parentheses are in millimeters unless otherwise specified.

Horizontal Bends 90° 60° 45° 30° (HB)

1 pair splice plates with hardware included.

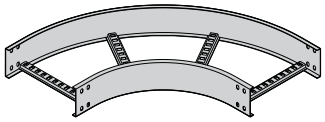

90˚ Horizontal Bend

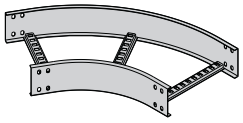

60˚ Horizontal Bend

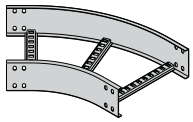

45˚ Horizontal Bend

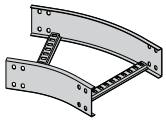

30˚ Horizontal Bend

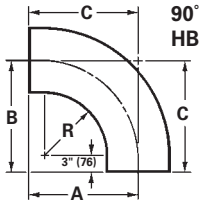

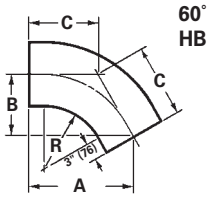

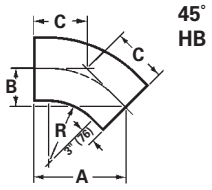

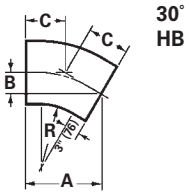

Bend Radius R in.	(mm)	Ladder Width in.	(mm)	90˚ Horizontal Bend Dimensions Catalog No.	A in.	(mm)	B in.	(mm)	C in.	(mm)	60˚ Horizontal Bend Dimensions Catalog No.	A in.	(mm)	B in.	(mm)	C in.	(mm)
		6	(152)	**(Pre)-06-90HB12**	18	(450)	18	(450)	18	(450)	**(Pre)-06-60HB12**	17 1/2	(445)	10 1/8	(257	11 11/16	(297)
		9	(228)	**(Pre)-09-90HB12**	19 1/2	(495)	19 1/2	(495)	19 1/2	(495)	**(Pre)-09-60HB12**	18 13/16	(478)	10 7/8	(276	12 1/2	(318)
		12	(305)	**(Pre)-12-90HB12**	21	(533)	21	(533)	21	(533)	**(Pre)-12-60HB12**	20 1/16	(510)	11 5/8	(295	13 3/8	(340)
12	(305)	18	(457)	**(Pre)-18-90HB12**	24	(600)	24	(600)	24	(600)	**(Pre)-18-60HB12**	22 11/16	(576)	13 1/8	(333	15 1/8	(384)
		24	(609)	**(Pre)-24-90HB12**	27	(686)	27	(686)	27	(686)	**(Pre)-24-60HB12**	25 5/16	(643)	14 5/8	(372	16 7/8	(429)
		30	(762)	**(Pre)-30-90HB12**	30	(750)	30	(750)	30	(750)	**(Pre)-30-60HB12**	27 7/8	(708)	16 1/8	(410	18 9/16	(472)
		36	(914)	**(Pre)-36-90HB12**	33	(838)	33	(838)	33	(838)	**(Pre)-36-60HB12**	30 1/2	(775)	17 5/8	(448	20 5/16	(516)
		6	(152)	**(Pre)-06-90HB24**	30	(750)	30	(750)	30	(750)	**(Pre)-06-60HB24**	27 7/8	(708)	16 1/8	(410	18 9/16	(472)
		9	(228)	**(Pre)-09-90HB24**	31 1/2	(800)	31 1/2	(800)	31 1/2	(800)	**(Pre)-09-60HB24**	29 3/16	(741)	16 7/8	(429	19 7/16	(494)
		12	(305)	**(Pre)-12-90HB24**	33	(838)	33	(838)	33	(838)	**(Pre)-12-60HB24**	30 1/2	(775)	17 5/8	(448	20 5/16	(516)
24	(609	18	(457)	**(Pre)-18-90HB24**	36	(914)	36	(914)	36	(914)	**(Pre)-18-60HB24**	33 1/16	(840)	19 1/8	(486	22 1/16	(560)
		24	(609)	**(Pre)-24-90HB24**	39	(991)	39	(991)	39	(991)	**(Pre)-24-60HB24**	35 11/16	(907)	20 5/8	(524	23 13/16	(605)
		30	(762)	**(Pre)-30-90HB24**	42	(1067)	42	(1067)	42	(1067)	**(Pre)-30-60HB24**	38 1/4	(972)	22 1/8	(562	25 1/2	(648)
		36	(914)	**(Pre)-36-90HB24**	45	(1143)	45	(1143)	45	(1143)	**(Pre)-36-60HB24**	40 7/8	(1038)	23 5/8	(600	27 1/4	(692)
				45˚ Horizontal Bend							**30˚ Horizontal Bend**						
		6	(152)	**(Pre)-06-45HB12**	15 3/4	(400)	6 1/2	(165)	9 3/16	(233)	**(Pre)-06-30HB12**	13 1/8	(333)	3 1/2	(89)	7	(175)
		9	(228)	**(Pre)-09-45HB12**	16 13/16	(427)	6 15/16	(176)	9 13/16	(249)	**(Pre)-09-30HB12**	13 7/8	(352)	3 11/16	(94)	7 7/16	(189)
		12	(305)	**(Pre)-12-45HB12**	17 7/8	(454)	7 3/8	(187)	10 7/16	(265)	**(Pre)-12-30HB12**	14 5/8	(372)	3 15/16	(100)	7 13/16	(198)
12	(305	18	(457)	**(Pre)-18-45HB12**	20	(500)	8 1/4	(210)	11 11/16	(297)	**(Pre)-18-30HB12**	16 1/8	(410)	4 5/16	(135)	8 5/8	(219)
		24	(609)	**(Pre)-24-45HB12**	22 1/16	(560)	9 1/8	(232)	12 15/16	(329)	**(Pre)-24-30HB12**	17 5/8	(448)	4 11/16	(119)	9 7/16	(240)
		30	(762)	**(Pre)-30-45HB12**	24 3/16	(614)	10	(250)	14 3/16	(360)	**(Pre)-30-30HB12**	19 1/8	(486)	5 1/8	(130)	10 1/4	(260)
		36	(914)	**(Pre)-36-45HB12**	26 5/16	(668)	10 15/16	(278)	15 7/16	(392)	**(Pre)-36-30HB12**	20 5/8	(524)	5 1/2	(140)	11 1/16	(281)
		6	(152)	**(Pre)-06-45HB24**	24 3/16	(614)	10	(250)	14 3/16	(360)	**(Pre)-06-30HB24**	19 1/8	(486)	5 1/8	(130)	10 1/4	(260)
		9	(228)	**(Pre)-09-45HB24**	25 1/4	(641)	10 1/2	(267)	14 13/16	(376)	**(Pre)-09-30HB24**	19 7/8	(505)	5 5/16	(135)	10 5/8	(270)
		12	(305)	**(Pre)-12-45HB24**	26 5/16	(668)	10 15/16	(278)	15 7/16	(392)	**(Pre)-12-30HB24**	20 5/8	(524)	5 1/2	(140)	11 1/16	(281)
24	(609	18	(457)	**(Pre)-18-45HB24**	28 7/16	(722)	11 13/16	(300)	16 11/16	(424)	**(Pre)-18-30HB24**	22 1/8	(562)	5 15/16	(151)	11 13/16	(300)
		24	(609)	**(Pre)-24-45HB24**	30 9/16	(776)	12 11/16	(322)	17 15/16	(456)	**(Pre)-24-30HB24**	23 5/8	(600)	6 5/16	(160)	12 5/8	(321)
		30	(762)	**(Pre)-30-45HB24**	32 11/16	(830)	13 9/16	(345)	19 1/8	(486)	**(Pre)-30-30HB24**	25 1/8	(638)	6 3/4	(172)	13 7/16	(341)
		36	(914)	**(Pre)-36-45HB24**	34 13/16	(884)	14 7/16	(367)	20 3/8	(518)	**(Pre)-36-30HB24**	26 5/8	(676)	7 1/8	(181)	14 1/4	(362)

(Pre) See page LDS-12 for catalog number prefix.
Width dimensions are to inside wall. Manufacturing tolerances apply to all dimensions.

Horizontal Tee (HT)

2 pair splice plates with hardware included.

Bend Radius R in.	Bend Radius R (mm)	Ladder Width in.	Ladder Width (mm)	Horizontal Tee Catalog No.	Dimensions A in.	Dimensions A (mm)	Dimensions B in.	Dimensions B (mm)
		6	(152)	**(Prefix)-06-HT12**	18	(457)	36	(914)
		9	(228)	**(Prefix)-09-HT12**	19½	(495)	39	(991)
		12	(305)	**(Prefix)-12-HT12**	21	(533)	42	(1067)
12	(305)	18	(457)	**(Prefix)-18-HT12**	24	(610)	48	(1219)
		24	(609)	**(Prefix)-24-HT12**	27	(686)	54	(1372)
		30	(762)	**(Prefix)-30-HT12**	30	(762)	60	(1524)
		36	(914)	**(Prefix)-36-HT12**	33	(838)	66	(1676)
		6	(152)	**(Prefix)-06-HT24**	30	(762)	60	(1524)
		9	(228)	**(Prefix)-09-HT24**	31½	(800)	63	(1600)
		12	(305)	**(Prefix)-12-HT24**	33	(838)	66	(1676)
24	(609	18	(457)	**(Prefix)-18-HT24**	36	(914)	72	(1829)
		24	(609)	**(Prefix)-24-HT24**	39	(991)	78	(1981)
		30	(762)	**(Prefix)-30-HT24**	42	(1067)	84	(2134)
		36	(914)	**(Prefix)-36-HT24**	45	(1143)	90	(2286)

(Prefix) See page LDS-12 for catalog number prefix.

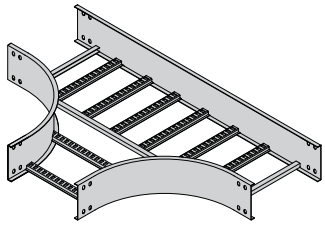

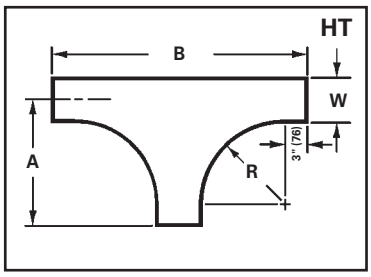

Horizontal Cross (HX)

3 pair splice plates with hardware included.

Bend Radius R in.	Bend Radius R (mm)	Ladder Width in.	Ladder Width (mm)	Horizontal Cross Catalog No.	Dimensions A in.	Dimensions A (mm)	Dimensions B in.	Dimensions B (mm)
		6	(152)	**(Prefix)-06-HX12**	18	(457)	36	(914)
		9	(228)	**(Prefix)-09-HX12**	19½	(495)	39	(991)
		12	(305)	**(Prefix)-12-HX12**	21	(533)	42	(1067)
12	(305)	18	(457)	**(Prefix)-18-HX12**	24	(610)	48	(1219)
		24	(609)	**(Prefix)-24-HX12**	27	(686)	54	(1372)
		30	(762)	**(Prefix)-30-HX12**	30	(762)	60	(1524)
		36	(914)	**(Prefix)-36-HX12**	33	(838)	66	(1676)
		6	(152)	**(Prefix)-06-HX24**	30	(762)	60	(1524)
		9	(228)	**(Prefix)-09-HX24**	31½	(800)	63	(1600)
		12	(305)	**(Prefix)-12-HX24**	33	(838)	66	(1676)
24	(609	18	(457)	**(Prefix)-18-HX24**	36	(914)	72	(1829)
		24	(609)	**(Prefix)-24-HX24**	39	(991)	78	(1981)
		30	(762)	**(Prefix)-30-HX24**	42	(1067)	84	(2134)
		36	(914)	**(Prefix)-36-HX24**	45	(1143)	90	(2286)

(Prefix) See page LDS-12 for catalog number prefix.

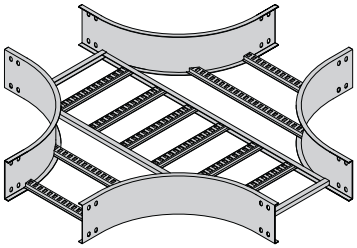

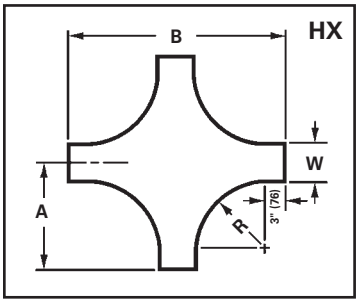

Width dimensions are to inside wall. Manufacturing tolerances apply to all dimensions.

Dimensions in parentheses are in millimeters unless otherwise specified.

Reducers (LR, SR, RR)

1 pair splice plates with hardware included.

Reducer Part Numbering

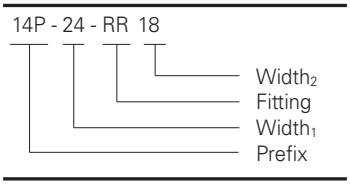

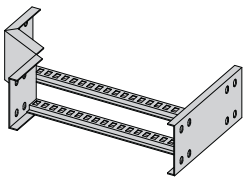

Left Reducer

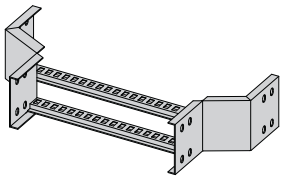

Straight Reducer

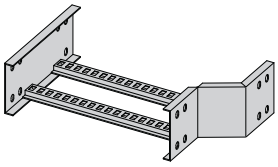

Right Reducer

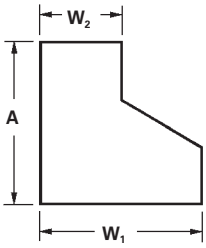

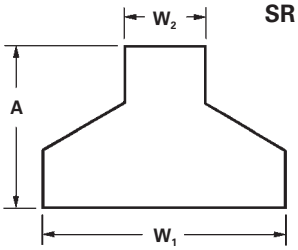

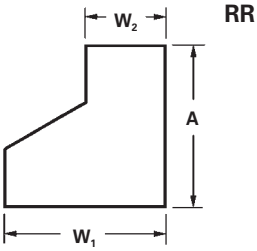

Ladder Width				Left Hand Reducer			Straight Reducer			Right Hand Reducer		
W_1		W_2		Catalog No.	A		Catalog No.	A		Catalog No.	A	
in.	(mm)	in.	(mm)		in.	(mm)		in.	(mm)		in.	(mm)
9	(228)	6	(152)	**(Prefix)-09-LR06**	9 3/4	(248)	**(Prefix)-09-SR06**	8 7/8	(225)	**(Prefix)-09-RR06**	9 3/4	(248)
12	(305)	6	(152)	**(Prefix)-12-LR06**	11 1/2	(292)	**(Prefix)-12-SR06**	9 3/4	(248)	**(Prefix)-12-RR06**	11 1/2	(292)
		9	(228)	**(Prefix)-12-LR09**	9 3/4	(248)	**(Prefix)-12-SR09**	8 7/8	(225)	**(Prefix)-12-RR09**	9 3/4	(248)
18	(457)	6	(152)	**(Prefix)-18-LR06**	14 15/16	(379)	**(Prefix)-18-SR06**	11 1/2	(292)	**(Prefix)-18-RR06**	14 15/16	(379)
		9	(228)	**(Prefix)-18-LR09**	13 3/16	(340)	**(Prefix)-18-SR09**	10 5/8	(270)	**(Prefix)-18-RR09**	13 3/16	(340)
		12	(305)	**(Prefix)-18-LR12**	11 1/2	(292)	**(Prefix)-18-SR12**	9 3/4	(248)	**(Prefix)-18-RR12**	11 1/2	(292)
24	(609)	6	(152)	**(Prefix)-24-LR06**	18 3/8	(467)	**(Prefix)-24-SR06**	13 3/16	(340)	**(Prefix)-24-RR06**	18 3/8	(467)
		9	(228)	**(Prefix)-24-LR09**	16 11/16	(424)	**(Prefix)-24-SR09**	12 3/8	(314)	**(Prefix)-24-RR09**	16 11/16	(424)
		12	(305)	**(Prefix)-24-LR12**	14 15/16	(379)	**(Prefix)-24-SR12**	11 1/2	(292)	**(Prefix)-24-RR12**	14 15/16	(379)
		18	(457)	**(Prefix)-24-LR18**	11 1/2	(292)	**(Prefix)-24-SR18**	9 3/4	(248)	**(Prefix)-24-RR18**	11 1/2	(292)
30	(762)	6	(152)	**(Prefix)-30-LR06**	21 7/8	(555)	**(Prefix)-30-SR06**	14 15/16	(380)	**(Prefix)-30-RR06**	21 7/8	(555)
		9	(228)	**(Prefix)-30-LR09**	20 1/8	(511)	**(Prefix)-30-SR09**	14 1/16	(358)	**(Prefix)-30-RR09**	20 1/8	(511)
		12	(305)	**(Prefix)-30-LR12**	18 3/8	(462)	**(Prefix)-30-SR12**	13 3/16	(335)	**(Prefix)-30-RR12**	18 3/8	(462)
		18	(459)	**(Prefix)-30-LR18**	14 15/16	(380)	**(Prefix)-30-SR18**	11 1/2	(292)	**(Prefix)-30-RR18**	14 15/16	(380)
		24	(609)	**(Prefix)-30-LR24**	11 1/2	(292)	**(Prefix)-30-SR24**	9 3/4	(248)	**(Prefix)-30-RR24**	11 1/2	(292)
36	(914)	6	(152)	**(Prefix)-36-LR06**	25 5/16	(643)	**(Prefix)-36-SR06**	16 11/16	(424)	**(Prefix)-36-RR06**	25 5/16	(643)
		9	(228)	**(Prefix)-36-LR09**	23 9/16	(598)	**(Prefix)-36-SR09**	15 13/16	(402)	**(Prefix)-36-RR09**	23 9/16	(598)
		12	(305)	**(Prefix)-36-LR12**	21 7/8	(555)	**(Prefix)-36-SR12**	14 15/16	(380)	**(Prefix)-36-RR12**	21 7/8	(555)
		18	(457)	**(Prefix)-36-LR18**	18 3/8	(462)	**(Prefix)-36-SR18**	13 3/16	(335)	**(Prefix)-36-RR18**	18 3/8	(462)
		24	(609)	**(Prefix)-36-LR24**	14 15/16	(380)	**(Prefix)-36-SR24**	11 1/2	(292)	**(Prefix)-36-RR24**	14 15/16	(380)
		30	(762)	**(Prefix)-36-LR30**	11 1/2	(292)	**(Prefix)-36-SR30**	9 3/4	(248)	**(Prefix)-36-RR30**	11 1/2	(292)

(Prefix) See page LDS-12 for catalog number prefix.

Width dimensions are to inside wall. Manufacturing tolerances apply to all dimensions.

Vertical Bend 90° (VO, VI)

1 pair splice plates with hardware included.

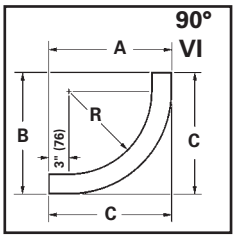

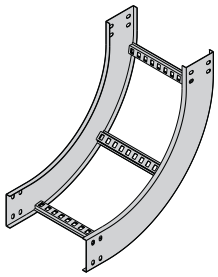

90° Vertical Inside

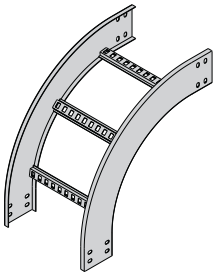

90° Vertical Outside

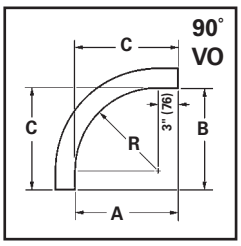

90° Vertical Outside Bend (VO)

Bend Radius R in.	(mm)	Ladder Width in.	(mm)	Catalog No.	VO Dimensions in. / (mm) All Series Heights A	B	C
12	(300	6	(152)	**(Pre)-06-90VO12**	15 (381)	15 (381)	15 (381)
		9	(228)	**(Pre)-09-90VO12**			
		12	(305)	**(Pre)-12-90VO12**			
		18	(457)	**(Pre)-18-90VO12**			
		24	(609)	**(Pre)-24-90VO12**			
		30	(762)	**(Pre)-30-90VO12**			
		36	(914)	**(Pre)-36-90VO12**			
24	(600	6	(152)	**(Pre)-06-90VO24**	27 (686)	27 (686)	27 (686)
		9	(228)	**(Pre)-09-90VO24**			
		12	(305)	**(Pre)-12-90VO24**			
		18	(457)	**(Pre)-18-90VO24**			
		24	(609)	**(Pre)-24-90VO24**			
		30	(762)	**(Pre)-30-90VO24**			
		36	(914)	**(Pre)-36-90VO24**			

(Pre) See page LDS-12 for catalog number prefix.

90° Vertical Inside Bend (VI)

Bend Radius R in.	(mm)	Ladder Width in.	(mm)	Catalog No.	VI Dimensions in. / (mm) Series 14 Steel A	B	C	Series 15 Steel A	B	C	Series 16 Steel A	B	C	Series 17 Steel A	B	C
12	(305)	6	(152)	**(Pre)-06-90VI12**	$18^{7}/_{16}$ (468)	$18^{7}/_{16}$ (468)	$18^{7}/_{16}$ (468)	$19^{3}/_{16}$ (487)	$19^{3}/_{16}$ (487)	$19^{3}/_{16}$ (487)	$20^{3}/_{16}$ (513)	$20^{3}/_{16}$ (513)	$20^{3}/_{16}$ (513)	$21^{3}/_{16}$ (538)	$21^{3}/_{16}$ (538)	$21^{3}/_{16}$ (538)
		9	(228)	**(Pre)-09-90VI12**												
		12	(305)	**(Pre)-12-90VI12**												
		18	(457)	**(Pre)-18-90VI12**												
		24	(609)	**(Pre)-24-90VI12**												
		30	(762)	**(Pre)-30-90VI12**												
		36	(914)	**(Pre)-36-90VI12**												
24	(609)	6	(152)	**(Pre)-06-90VI24**	$30^{7}/_{16}$ (773)	$30^{7}/_{16}$ (773)	$30^{7}/_{16}$ (773)	$31^{3}/_{16}$ (792)	$31^{3}/_{16}$ (792)	$31^{3}/_{16}$ (792)	$32^{3}/_{16}$ (817)	$32^{3}/_{16}$ (817)	$32^{3}/_{16}$ (817)	$33^{3}/_{16}$ (843)	$33^{3}/_{16}$ (843)	$33^{3}/_{16}$ (843)
		9	(228)	**(Pre)-09-90VI24**												
		12	(305)	**(Pre)-12-90VI24**												
		18	(457)	**(Pre)-18-90VI24**												
		24	(609)	**(Pre)-24-90VI24**												
		30	(762)	**(Pre)-30-90VI24**												
		36	(914)	**(Pre)-36-90VI24**												

(Pre) See page LDS-12 for catalog number prefix.

All dimensions in parentheses are millimeters unless otherwise specified.
Manufacturing tolerances apply to all dimensions.

Vertical Bend 60° (VO, VI)

1 pair splice plates with hardware included.

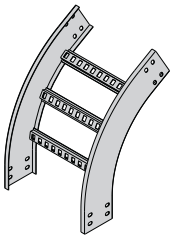

60° Vertical Outside

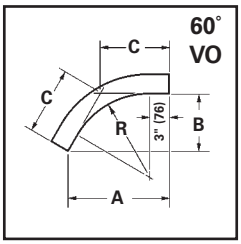

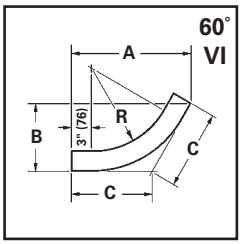

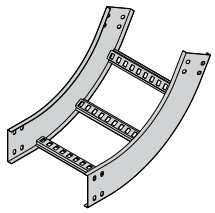

60° Vertical Inside

60° Vertical Outside Bend (VO)

Bend Radius R in.	(mm)	Ladder Width in.	(mm)	Catalog No.	VO Dimensions in. / (mm) All Series Heights A	B	C
12	(300	6	(152)	**(Pre)-06-60VO12**	$14^{7}/_{8}$ (378)	$8^{5}/_{8}$ (219)	$9^{15}/_{16}$ (252)
		9	(228)	**(Pre)-09-60VO12**			
		12	(305)	**(Pre)-12-60VO12**			
		18	(457)	**(Pre)-18-60VO12**			
		24	(609)	**(Pre)-24-60VO12**			
		30	(762)	**(Pre)-30-60VO12**			
		36	(914)	**(Pre)-36-60VO12**			
24	(600	6	(152)	**(Pre)-06-60VO24**	$25^{5}/_{16}$ (643)	$14^{5}/_{8}$ (371)	$16^{7}/_{8}$ (428)
		9	(228)	**(Pre)-09-60VO24**			
		12	(305)	**(Pre)-12-60VO24**			
		18	(457)	**(Pre)-18-60VO24**			
		24	(609)	**(Pre)-24-60VO24**			
		30	(762)	**(Pre)-30-60VO24**			
		36	(914)	**(Pre)-36-60VO24**			

(Pre) See page LDS-12 for catalog number prefix.

60° Vertical Inside Bend (VI)

Bend Radius R in.	(mm)	Ladder Width in.	(mm)	Catalog No.	VI Dimensions in. / (mm) Series 14 Steel A	B	C	Series 15 Steel A	B	C	Series 16 Steel A	B	C	Series 17 Steel A	B	C
12	(305)	6	(152)	**(Pre)-06-60VI12**	$18^{1}/_{16}$ (459)	$10^{7}/_{16}$ (265)	12 (305)	$18^{1}/_{2}$ (470)	$10^{11}/_{16}$ (271)	$12^{3}/_{8}$ (314)	$19^{3}/_{8}$ (492)	$11^{3}/_{16}$ (284)	$12^{15}/_{16}$ (328)	$20^{1}/_{4}$ (514)	$11^{11}/_{16}$ (297)	$13^{1}/_{2}$ (343)
		9	(228)	**(Pre)-09-60VI12**												
		12	(305)	**(Pre)-12-60VI12**												
		18	(457)	**(Pre)-18-60VI12**												
		24	(609)	**(Pre)-24-60VI12**												
		30	(762)	**(Pre)-30-60VI12**												
		36	(914)	**(Pre)-36-60VI12**												
24	(609)	6	(152)	**(Pre)-06-60VI24**	$28^{7}/_{16}$ (722)	$16^{7}/_{16}$ (417)	$18^{15}/_{16}$ (481)	$28^{15}/_{16}$ (735)	$16^{11}/_{16}$ (424)	$19^{1}/_{4}$ (489)	$29^{3}/_{4}$ (755)	$17^{3}/_{16}$ (436)	$19^{7}/_{8}$ (505)	$30^{5}/_{8}$ (778)	$17^{11}/_{16}$ (449)	$20^{7}/_{16}$ (519)
		9	(228)	**(Pre)-09-60VI24**												
		12	(305)	**(Pre)-12-60VI24**												
		18	(457)	**(Pre)-18-60VI24**												
		24	(609)	**(Pre)-24-60VI24**												
		30	(762)	**(Pre)-30-60VI24**												
		36	(914)	**(Pre)-36-60VI24**												

(Pre) See page LDS-12 for catalog number prefix.

Manufacturing tolerances apply to all dimensions.

Vertical Bend 45° (VO, VI)

1 pair splice plates with hardware included.

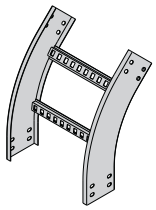

45° Vertical Outside

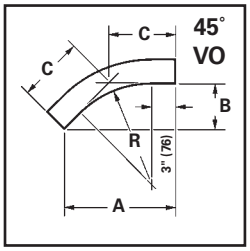

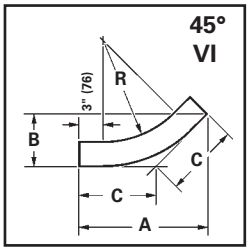

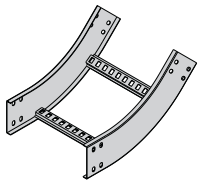

45° Vertical Inside

45° Vertical Outside Bend (VO)

Bend Radius R in.	(mm)	Ladder Width in.	(mm)	Catalog No.	VO Dimensions in. / (mm) All Series Heights A	B	C
12	(300)	6	(152)	**(Pre)-06-45VO12**	$13\frac{5}{8}$ (346)	$5\frac{5}{8}$ (143)	8 (203)
		9	(228)	**(Pre)-09-45VO12**			
		12	(305)	**(Pre)-12-45VO12**			
		18	(457)	**(Pre)-18-45VO12**			
		24	(609)	**(Pre)-24-45VO12**			
		30	(762)	**(Pre)-30-45VO12**			
		36	(914)	**(Pre)-36-45VO12**			
24	(600)	6	(152)	**(Pre)-06-45VO24**	$22\frac{1}{16}$ (560)	$9\frac{1}{8}$ (232)	$12\frac{15}{16}$ (328)
		9	(228)	**(Pre)-09-45VO24**			
		12	(305)	**(Pre)-12-45VO24**			
		18	(457)	**(Pre)-18-45VO24**			
		24	(609)	**(Pre)-24-45VO24**			
		30	(762)	**(Pre)-30-45VO24**			
		36	(914)	**(Pre)-36-45VO24**			

(Pre) See page LDS-12 for catalog number prefix.

45° Vertical Inside Bend (VI)

Bend Radius R in.	(mm)	Ladder Width in.	(mm)	Catalog No.	VI Dimensions in. / (mm) Series 14 Steel A	B	C	Series 15 Steel A	B	C	Series 16 Steel A	B	C	Series 17 Steel A	B	C
12	(305)	6	(152)	**(Pre)-06-45VI12**	$16\frac{3}{16}$ (411)	$6\frac{11}{16}$ (170)	$9\frac{1}{2}$ (241)	$16\frac{9}{16}$ (420)	$6\frac{7}{8}$ (174)	$9\frac{11}{16}$ (246)	$17\frac{1}{4}$ (438)	$7\frac{3}{16}$ (182)	$10\frac{1}{8}$ (257)	18 (457)	$7\frac{7}{16}$ (189)	$10\frac{9}{16}$ (268)
		9	(228)	**(Pre)-09-45VI12**												
		12	(305)	**(Pre)-12-45VI12**												
		18	(457)	**(Pre)-18-45VI12**												
		24	(609)	**(Pre)-24-45VI12**												
		30	(762)	**(Pre)-30-45VI12**												
		36	(914)	**(Pre)-36-45VI12**												
24	(609)	6	(152)	**(Pre)-06-45VI24**	$24\frac{11}{16}$ (627)	$10\frac{3}{16}$ (259)	$14\frac{7}{16}$ (367)	$25\frac{1}{16}$ (662)	$10\frac{3}{8}$ (263)	$11\frac{11}{16}$ (373)	$25\frac{3}{4}$ (654)	$10\frac{11}{16}$ (271)	$15\frac{1}{16}$ (382)	$26\frac{1}{2}$ (673)	11 (279)	$15\frac{1}{2}$ (394)
		9	(228)	**(Pre)-09-45VI24**												
		12	(305)	**(Pre)-12-45VI24**												
		18	(457)	**(Pre)-18-45VI24**												
		24	(609)	**(Pre)-24-45VI24**												
		30	(762)	**(Pre)-30-45VI24**												
		36	(914)	**(Pre)-36-45VI24**												

(Pre) See page LDS-12 for catalog number prefix.

Manufacturing tolerances apply to all dimensions.

Vertical Bend 30° (VO, VI)

1 pair splice plates with hardware included.

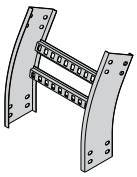

30° Vertical Outside

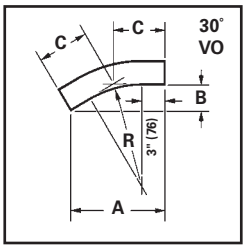

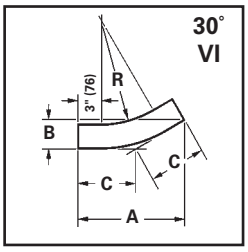

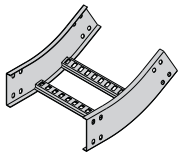

30° Vertical Inside

30° Vertical Outside Bend (VO)

Bend Radius R in.	(mm)	Ladder Width in.	(mm)	Catalog No.	VO Dimensions in. / (mm) All Series Heights A	B	C
12	(300)	6	(152)	(Pre)-06-30VO12	$11\frac{5}{8}$ (295)	$3\frac{1}{8}$ (79)	$6\frac{3}{16}$ (157)
		9	(228)	(Pre)-09-30VO12			
		12	(305)	(Pre)-12-30VO12			
		18	(457)	(Pre)-18-30VO12			
		24	(609)	(Pre)-24-30VO12			
		30	(762)	(Pre)-30-30VO12			
		36	(914)	(Pre)-36-30VO12			
24	(600)	6	(152)	(Pre)-06-30VO24	$17\frac{5}{8}$ (448)	$4\frac{11}{16}$ (110)	$9\frac{7}{16}$ (240)
		9	(228)	(Pre)-09-30VO24			
		12	(305)	(Pre)-12-30VO24			
		18	(457)	(Pre)-18-30VO24			
		24	(609)	(Pre)-24-30VO24			
		30	(762)	(Pre)-30-30VO24			
		36	(914)	(Pre)-36-30VO24			

(Pre) See page LDS-12 for catalog number prefix.

30° Vertical Inside Bend (VI)

Bend Radius R in.	(mm)	Ladder Width in.	(mm)	Catalog No.	VI Dimensions in. / (mm) Series 14 Steel A	B	C	Series 15 Steel A	B	C	Series 16 Steel A	B	C	Series 17 Steel A	B	C
12	(305)	6	(152)	(Pre)-06-30VI12	$13\frac{7}{16}$ (341)	$3\frac{5}{8}$ (92)	$7\frac{3}{16}$ (182)	$13\frac{11}{16}$ (347)	$3\frac{11}{16}$ (93)	$7\frac{5}{16}$ (186)	$14\frac{3}{16}$ (360)	$3\frac{13}{16}$ (97)	$7\frac{5}{8}$ (193)	$14\frac{11}{16}$ (373)	$3\frac{15}{16}$ (100)	$7\frac{7}{8}$ (200)
		9	(228)	(Pre)-09-30VI12												
		12	(305)	(Pre)-12-30VI12												
		18	(457)	(Pre)-18-30VI12												
		24	(609)	(Pre)-24-30VI12												
		30	(762)	(Pre)-30-30VI12												
		36	(914)	(Pre)-36-30VI12												
24	(609)	6	(152)	(Pre)-06-30VI24	$19\frac{7}{16}$ (494)	$5\frac{3}{16}$ (132)	$10\frac{7}{16}$ (265)	$19\frac{11}{16}$ (500)	$5\frac{5}{16}$ (135)	$10\frac{9}{16}$ (268)	$20\frac{3}{16}$ (513)	$5\frac{7}{16}$ (138)	$10\frac{13}{16}$ (274)	$20\frac{11}{16}$ (525)	$5\frac{9}{16}$ (141)	$11\frac{1}{16}$ (281)
		9	(228)	(Pre)-09-30VI24												
		12	(305)	(Pre)-12-30VI24												
		18	(457)	(Pre)-18-30VI24												
		24	(609)	(Pre)-24-30VI24												
		30	(762)	(Pre)-30-30VI24												
		36	(914)	(Pre)-36-30VI24												

(Pre) See page LDS-12 for catalog number prefix.

Manufacturing tolerances apply to all dimensions.

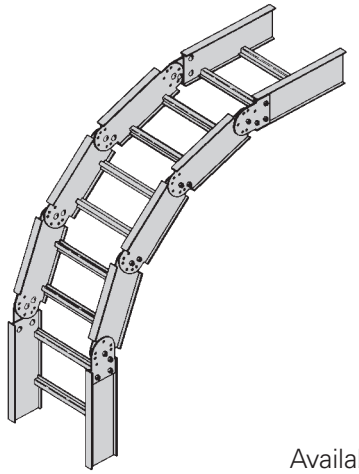

Vertical Bend Segments (VBS)

Adjustable Vertical Bends are made up of one or more vertica bend segments and can be used as a vertical inside (VI) or vertical outside (VO) bend. This design provides for vertical changes in direction with angles of 45˚, 60˚ and 90˚ for 12" (305 mm) or 24" (609 mm) radius. The chart below shows the number of segments required for the various combinations of angles and radii. The VBS-1, VBS-2 and VBS-3 include one, two or three segments respectively with splice plates and hardware. Holes for setting standard angles are pre-punched in each segment. Other angles can be set by field drilling another hole for the locking bolt.

Available for 148P and 148G only.

Nominal Bend Radius		Catalog No.	Dimensions											
			VO						VI					
			A		B		R		A		B		R	
in.	(mm)		in.	(mm)	in.	(mm)	in.	(mm)	in.	(mm)	in.	(mm)	in.	(mm)
90˚ Vertical Inside or Outside														
12	(305)	**14(*)†-(‡)-VBS-1**	8¼	(210)	8¼	(210)	6½	(165)	12⅛	(303)	12⅛	(303)	10½	(267)
24	(609)	**14(*)†-(‡)-VBS-3**	24	(610)	24	(610)	22¼	(565)	27⅞	(708)	27⅞	(708)	26¼	(667)
60˚ Vertical Inside or Outside														
12	(305)	**14(*)†-(‡)-VBS-1**	11¾	(298)	6½	(165)	12	(305)	14¾	(375)	8½	(216)	16	(406)
24	(609)	**14(*)†-(‡)-VBS-2**	11¾	(298)	6½	(165)	12	(305)	14¾	(375)	8½	(216)	16	(406)
45˚ Vertical Inside or Outside														
12	(305)	**14(*)†-(‡)-VBS-1**	12¾	(324)	5¼	(133)	17⅛	(435)	15½	(394)	6⅞	(175)	21	(540)
24	(609)	**14(*)†-(‡)-VBS-1**	12¾	(324)	5¼	(133)	17⅛	(435)	15½	(394)	6⅞	(175)	21	(540)

Notes:
1. (*) Insert material type: P=Pre Galvanized, G=HDGAF
2. (†) Contact home office for information on Ventilated Trough and Solid Trough availability
3. (‡) Insert width 6, 9, 12, 18, 24, 30, 36

Fitting Hole Pattern

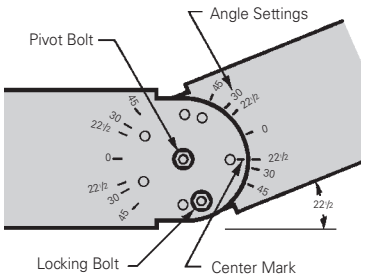

Setting the Angle
To find correct angle setting, divide angle of offset by the number of segments plus one. The result is equal to the angle setting stamped on the vertical bend segment and the splice plate. After inserting center pivot bolt, align the mark at the end of the segment or splice plate with the angle and insert locking bolt in the pre-punched hole.

Example: 90˚ bend, 24" radius requires 3 segments
3 segments + 1 = 4
90˚ divided by 4 = 22½˚
Set all vertical segments at 22½˚

VBS-1 (1 Segment)

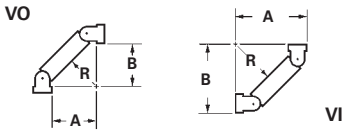

VBS-2 (2 Segments)

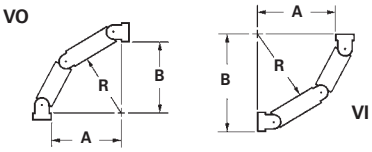

VBS-3 (3 Segments)

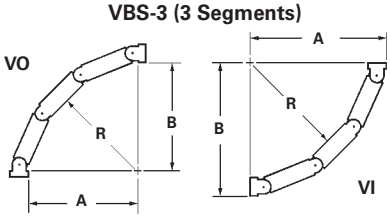

Offset Dimensions

One vertical bend segment can be used to complete a vertical offset. Offset dimensions are shown.

Angle ø	A		B	
	in.	(mm)	in.	(mm)
45˚	12	305	8½	216
30˚	14	355	5¾	146
22½˚	14¼	362	5	127

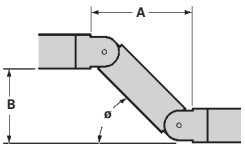

Dimensions in parentheses are in millimeters unless otherwise specified.

Slotted Steel Cable Ladder

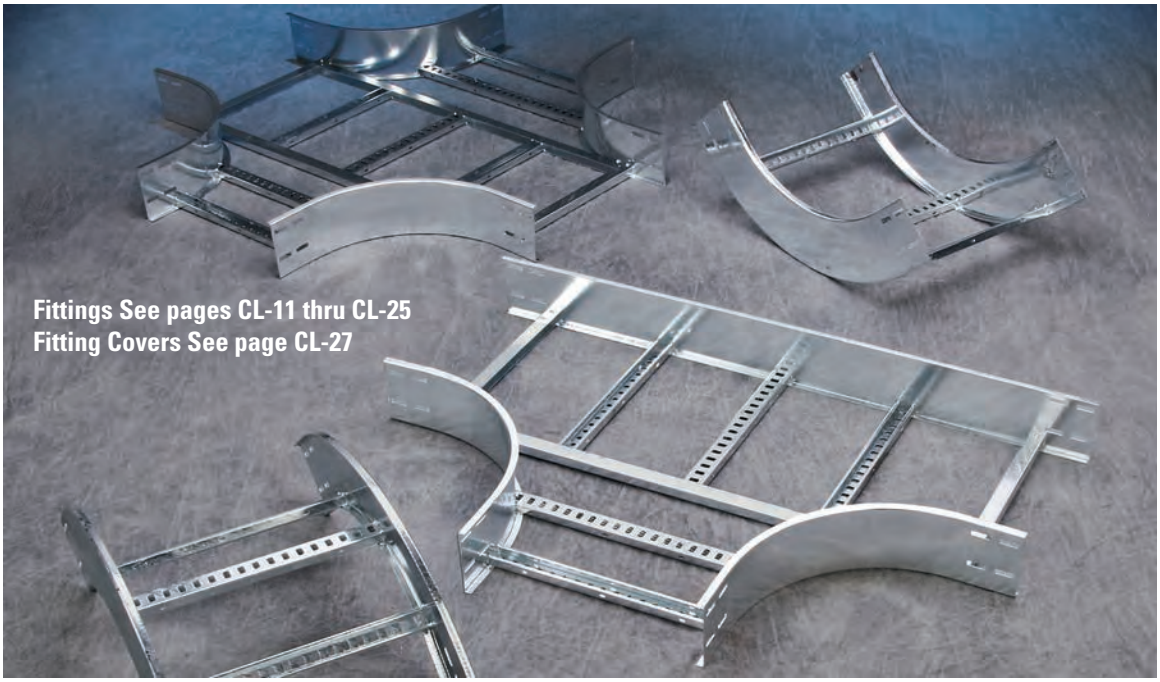

Cable Ladder Construction - Side Rails

B-Line cable ladder side rails features the I-Beam shape to provide system integrity. The I-Beam is the most efficient structural shape, providing strength without increasing the weight of the side rail itself. This shape, in conjunction with the slots in the side rails, offers the optimum design.

In addition, the I-Beam shape has a number of other advantages:

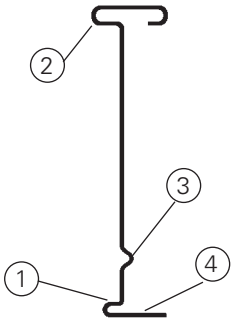

1) Roll-formed steel increases the strength of the steel itself
2) Enlarged top flange adds stiffness to the system
3) Bend in side rail to lock in rung position and provide more surface area for a solid weld
4) Bottom rail surface provides positive support for rungs
5) Slotted side rail design reduces installation time

Profile Dimensions

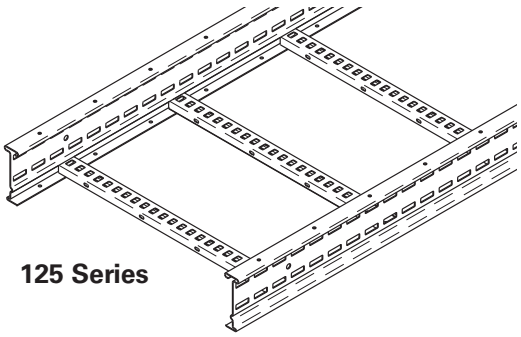

125 Series

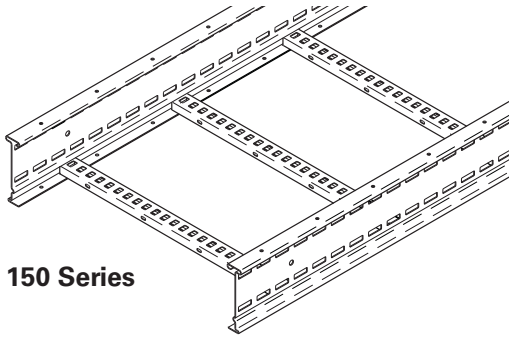

150 Series

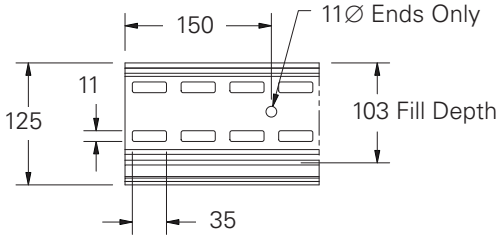

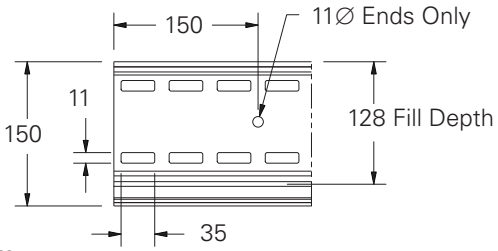

Dimensions are in mm

Side Rails: Strength and Safe Working Load

Side rails provide the strength of the ladder system. The load ratings for the side rails in this catalog are based on testing to IEC 61537, 2006 Edition, Test Type 2 as well as Simple Beam Tests per NEMA VE1. Values in the catalog load charts are based upon allowable deflection and safe working loads calculated using a 1.5 factor of safety. All cable ladders in this catalog will support without collapse a 90.7kg (200 lbs.) concentrated load above published loads. Cable ladders must be supported on spans shorter than or equal to the length of the ladder used.

High Performance Ladder (HPL) Series

Straight Section Part Numbering

Prefix — Suffix

Example: **125 X 300 C D 12I LL - 0600 - 3000**

Height (mm)	Material	* Rung Spacing (mm)	* Rung Shape	* Rung Orientation	Side Rail	Ladder Straight Section	Width (mm)	Length (mm)
125 150	X = Stainless Steel 316	200 300	C Profile	D = Down	12I = HPL Series		0150 0300 0450 0600 0750 0900	3000 6000

* Other Options Available - See "Cable Ladder Construction"

Splice plates not supplied with straight sections. One (1) pair required to connect to system. See pages CL-6.

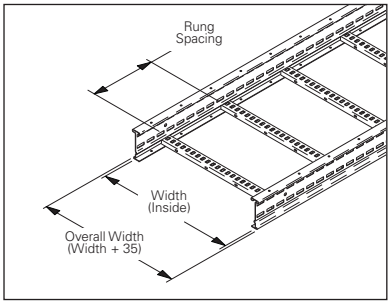

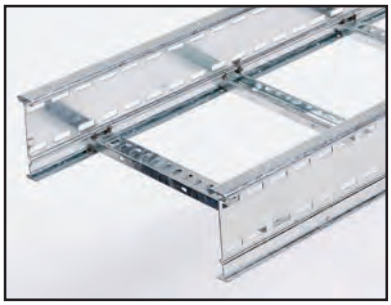

Certification # HOU-470-13-216

Approval # 13-HS1047406-PDA

Height	Material		Tray Width 150mm	300mm	450mm	600mm	750mm	900mm
150mm	SS6	kg/m	4.8	5.3	5.7	6.2	7.0	7.5
		Strength to Weight Ratio*	81.5	73.8	68.6	63.1	55.9	52.1
150mm	SS6	kg/m	4.8	5.3	5.7	6.2	7.0	7.5
		Strength to Weight Ratio*	81.5	73.8	68.6	63.1	55.9	52.1

* Strength to Weight Ratio determined by dividing 3m span load by weight.
† All tests conducted per IEC 61537 Test Type II with LHD-123X, 900mm width, and 300mm rung spacing.

Height	Side Rail Dimensions	Series	Material	Span (m)	Loads † (kg/m)
125mm	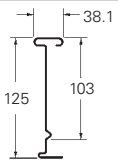	HPL	SS6	3	345
				4	166
				5	99
				6	90
150mm	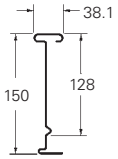	HPL	SS6	3	391
				4	212
				5	130
				6	98

Dimensions in parentheses are in millimeters unless otherwise specified.

Standard Duty Ladder (SDL) & Heavy Duty Ladder (HDL) Series

Straight Section Part Numbering

Prefix — Suffix

Example: **125 G 300 C D 15I LL - 0600 - 3000**

Height (mm)	Material	* Rung Spacing (mm)	* Rung Shape	* Rung Orientation	Side Rail	Ladder Straight Section	Width (mm)	Length (mm)
125 150	G = Galvanized Steel X = Stainless Steel 316	200 300	C Profile	D = Down	15I = SDL Series 20I = HDL Series		0150 0300 0450 0600 0750 0900	3000 6000

* Other Options Available - See "Cable Ladder Construction"

Splice plates not supplied with straight sections. One (1) pair required to connect to system. See pages CL-6.

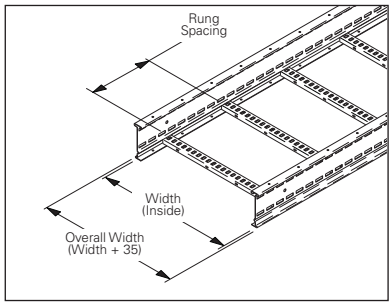

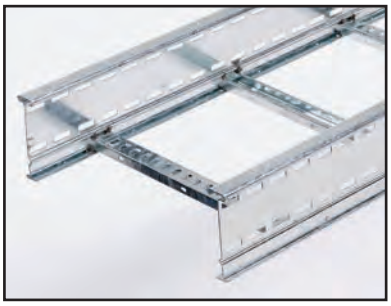

Approval # 13-HS1047406-PDA

Height	Side Rail Dimensions	Series	Material	Span (m)	Loads (kg/m)	Material	Span (m)	Loads (kg/m)
125mm	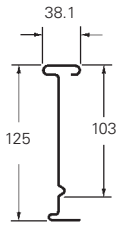	SDL	HDG	3	420	SS6	3	441
				4	310		4	323
				5	200		5	206
				6	90		6	88
		HDL	HDG	3	442	SS6	3	458
				4	341		4	340
				5	241		5	223
				6	140		6	105
150mm	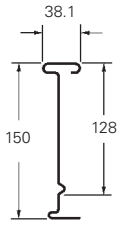	SDL	HDG	3	525	SS6	3	474
				4	394		4	356
				5	263		5	239
				6	132		6	121
		HDL	HDG	3	577	SS6	3	482
				4	446		4	368
				5	315		5	254
				6	184		6	140

All tests conducted per IEC 61537 Test Type II with 900mm width, and 300mm rung spacing.

Dimensions in parentheses are in millimeters unless otherwise specified.

Steel Cable Ladder - HPL, SDL, HDL - Weights

HPL Series Cable Ladder

Height	Material	Series		Tray Width 150mm	300mm	450mm	600mm	750mm	900mm
150mm	SS6	HPL	kg/m	4.4	4.8	5.3	5.7	6.6	7.1
			STWR*	78.4	71.9	65.1	60.5	52.3	48.6
150mm	SS6	HPL	kg/m	4.8	5.3	5.7	6.2	7.0	7.5
			STWR*	81.5	73.8	68.6	63.1	55.9	52.1

STWR = Strength to Weight Ratio

SDL & HDL Series Cable Ladder

Height	Material	Series		Tray Width 150mm	300mm	450mm	600mm	750mm	900mm
125mm	HDG	SDL	kg/m	5.7	6.2	6.7	7.2	8.4	9.0
			STWR*	73.7	67.7	62.7	58.3	50.0	46.7
		HDL	kg/m	7.3	7.8	8.3	8.8	10.0	10.7
			STWR*	60.5	56.7	53.3	50.2	44.2	41.3
	SS6	SDL	kg/m	5.3	5.8	6.2	6.7	7.8	8.4
			STWR*	83.2	76.0	71.1	65.8	56.5	52.5
		HDL	kg/m	6.8	7.3	7.7	8.2	9.3	9.9
			STWR*	67.4	62.7	59.5	55.9	49.2	46.3
150mm	HDG	SDL	kg/m	6.3	6.8	7.3	7.8	9.0	9.6
			STWR*	83.3	77.2	71.9	67.3	58.3	54.7
		HDL	kg/m	8.2	8.7	9.2	9.7	10.9	11.5
			STWR*	70.4	66.3	62.7	59.5	52.9	50.2
	SS6	SDL	kg/m	5.9	6.3	6.8	7.2	8.4	9.0
			STWR*	80.3	75.2	69.7	65.8	56.4	52.7
		HDL	kg/m	7.6	8.1	8.5	9.0	10.1	10.7
			STWR*	63.4	59.5	56.7	53.6	47.7	45.0

STWR = Strength to Weight Ratio

* Strength to Weight Ratio determined by dividing 3m span load by weight.
Weights are for 300mm rung spacing, C-rung, slotted side rail.

To download all ladder weights, visit www.cooperbline.com/iec.

Standard Splice Plates

- Not included with straight sections or fittings.
- Standard 8-slot pattern.
- Supplied in pairs with hardware.
- (*) Insert G or SS6

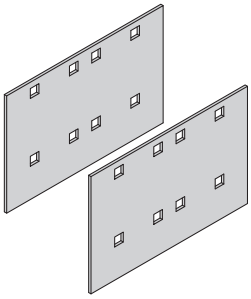

Ladder Height mm	Catalog No.
125	**LSP125(*)**
150	**LSP150(*)**

Expansion Splice Plates

- Expansion plates allow for 25mm expansion or contraction of the cable ladder, or where expansion joints occur in the supporting structure.
- Supplied in pairs with hardware.
- (*) Insert G or SS6

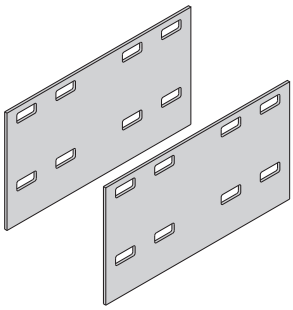

Ladder Height mm	Catalog No.
125	**LES125(*)**
150	**LES150(*)**

Vertical Adjustable Splice Plates

- These plates provide for changes in elevation that do not conform to standard vertical fittings.
- Supplied in pairs with hardware.
- **Bonding Jumpers are not required.**
- (*) Insert G or SS6

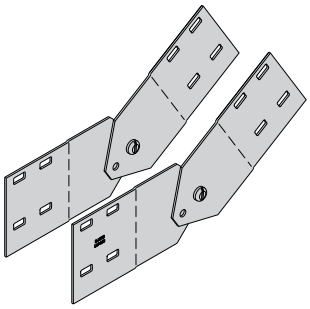

Ladder Height mm	Catalog No.
125	**LVA125(*)**
150	**LVA150(*)**

Reversing Splice Plates

- For reversing ladder orientation.
- Supplied as one pair with hardware.
- (*) Insert G or SS6

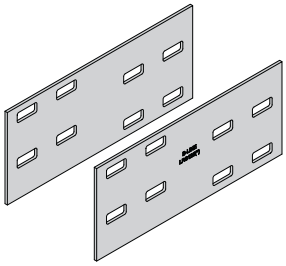

Ladder Height mm	Catalog No.
125	**LRS125(*)**
150	**LRS150(*)**

Horizontal Adjustable Splice Plates

- Offered to adjust a cable ladder run for changes in direction in a horizontal plane that do not conform to standard horizontal fittings.
- Supplied in pairs with hardware.
- Rail extensions 1000mm length standard, LHA splices included.
- (*) Insert G or SS6

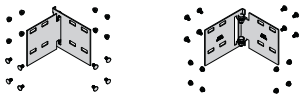

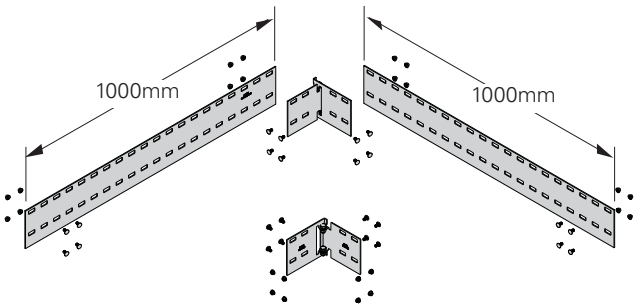

Splice Kit

Ladder Height mm	Catalog No.
125	**LHA125(*)**
150	**LHA150(*)**

Rail Extension Kit

Ladder Height mm	Catalog No.
125	**LRE125(*)**
150	**LRE150(*)**

Dimensions in parentheses are in millimeters unless otherwise specified.

Reducing Coupler Plate

- For offset transitions.
- Supplied as one plate with hardware.
- (*) Insert G or SS6

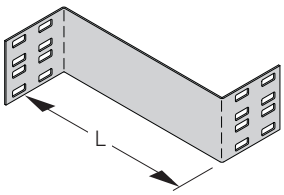

Ladder Height mm	Catalog No.	'L' mm
125	LSR125(*)150	150
	LSR125(*)300	300
	LSR125(*)450	450
	LSR125(*)600	600
	LSR125(*)750	750
150	LSR150(*)150	150
	LSR150(*)300	300
	LSR150(*)450	450
	LSR150(*)600	600
	LSR150(*)750	750

Splice Hardware

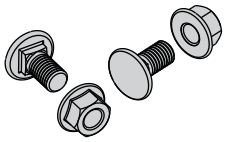

Catalog No.	Description
M10x20 SNCB(*)	Square Neck Coach Bolt
M10 SFHN(*)	Serrated Flange Hex Nut
M10 ELAS(*)	Elastic Stop Nut

Finish (*): HDG = Hot Dipped Galvanized
SS6 = Stainless Steel 316

Heavy Duty Expansion Splice Plates

Heavy Duty Expansion Splice Plates are engineered to eliminate the recommended additional support at each expansion joint where cable ladder systems are utilized. They allow installers to support an expansion joint without additional supports versus the traditional two supports.

Expansion joints are common in long-run outdoor applications where temperature variations result in thermal expansion and contraction of the cable ladder system. The installer using the traditional expansion splice would be required to install two supports, one on either side of the expansion joint. By utilizing the B-Line Heavy Duty Expansion Splice Plate, no additional supports are required.

- NEMA VE 2 Compliant
- Lowest total cost of installation solution
- Wrap-around design supports the side rail on bottom of each ladder section
- Available Offering:
  - o Hot dip galvanized steel
  - o Stainless steel 316
- Designed for easy installation in a variety of applications
- Supplied in pairs with hardware
- Utilize with B-Line Cable Ladder Systems
  - o HPL, SDL, & HDL

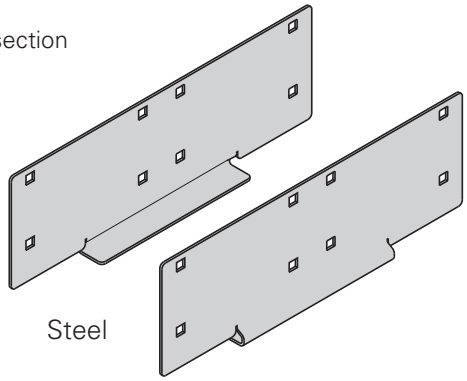

Heavy Duty Expansion Splice Plates are one of five key attributes of the B-Line cable ladder system that combine to yield significant opportunities to reduce structural steel supports in heavy industrial applications by up to 66%. To learn more, visit **www.cooperbline.com/sss**.

Ladder Height mm	Catalog No. HDG	Catalog No. SS6
125	LHE125G	LHE125SS6
150	LHE150G	LHE150SS6

Tee/Wall Connector

- For field connecting ladder to a wall or to another ladder as a tee.
- Supplied in pairs with hardware.
- (*) Insert G or SS6

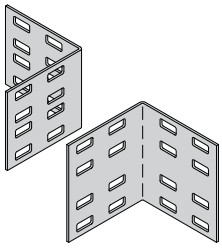

Ladder Height mm	Catalog No.
125	**LTC125(*)**
150	**LTC150(*)**

Bonding Jumper

Use at each expansion splice and where the cable ladder is not mechanically/electrically continuous to ground.

- Sold individually.
- Hardware included.
- Bonding jumper is 406mm long.

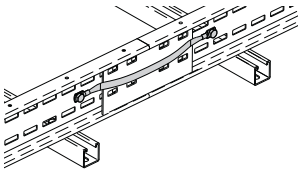

Catalog No.	Copper Wire	Ampacity
99-N1	9 Strands #1	600

Blind End

- For finished look to end of ladder.
- Supplied as one plate with hardware.
- (*) Insert G or SS6

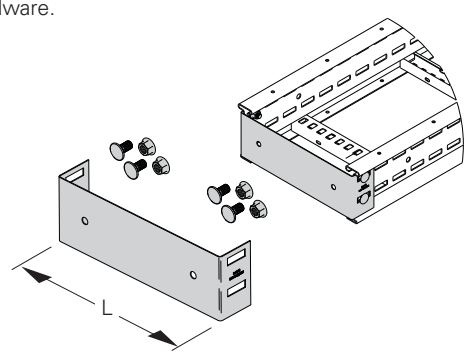

Ladder Ht. mm	Catalog No.	'L' mm
125	**LBE125(*)150**	150
	LBE125(*)300	300
	LBE125(*)450	450
	LBE125(*)600	600
	LBE125(*)750	750
	LBE125(*)900	900
150	**LBE150(*)150**	150
	LBE150(*)300	300
	LBE150(*)450	450
	LBE150(*)600	600
	LBE150(*)750	750
	LBE150(*)900	900

Ladder Drop-Out

- Specially-designed Ladder Drop-Outs provide a rounded surface with 100mm radius to protect cable as it exits from the cable ladder, preventing damage to insulation. The drop-out will attach to any desired rung.
- Supplied with hardware.
- (*) Insert G or SS6

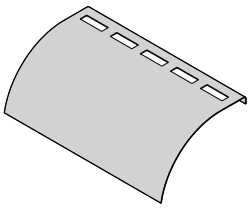

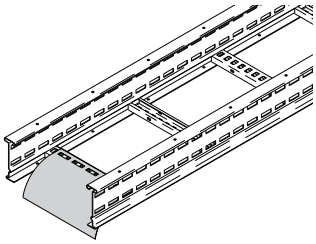

Catalog No.	Ladder Width mm
LDO(*)150	150
LDO(*)300	300
LDO(*)450	450
LDO(*)600	600
LDO(*)750	750
LDO(*)900	900

Threaded Rod (ATR) & Rod Coupling

Loading based on safety factor 5.

See B-Line Strut Systems Catalog for other size and finish options.

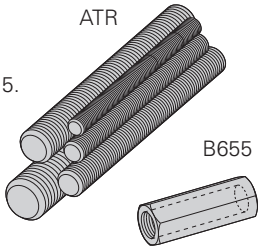

Catalog No. & Size	Thread Size	Recommended Load kN	Wt./ 30.5m kg	Coupling No.
ATR M6	M6	1.32	6.1	**B655-M6ZN**
ATR M8	M8	2.42	10.7	**B655-M8ZN**
ATR M10	M10	3.66	15.3	**B655-M10ZN**
ATR M12	M12	5.35	24.4	**B655-M12ZN**

Dimensions in parentheses are in millimeters unless otherwise specified.

Slotted Steel Cable Ladder - Accessories

Cable Ladder Clamp/Guide - SDL & HDL Series

- Features a no-twist design.
- Has four times the strength of the traditional design.
- Each side is labelled to ensure proper installation.
- Supplied in pairs without hardware.
- (*) Insert G or SS6

Patent # RE35479

Catalog No.	Overall Length	Hardware Size
9(*)-1204	38mm	M6
9(*)-1208	57mm	M10
9(*)-1205	57mm	M12

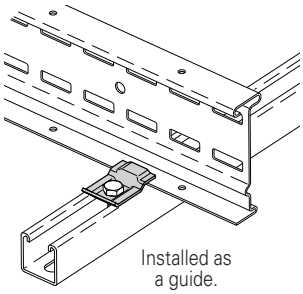

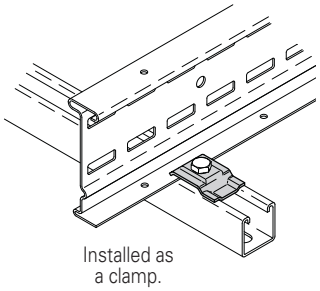

When installing this device as an expansion guide on the outside flange of *Side Rail*, use the Catalog No. **B202** Square Washer (see page BF-24) in order to properly elevate the guide.

Cable Ladder Clamp/Guide - HPL Series

- Improves performance - see HPL Series Load Tables below
- Both LHD-121X and LHD-123X are sold in pairs
  LHD-121X - requires mounting hardware (not included)
  LHD-123X includes side rail attachment hardware - requires mounting hardware (not included)
- Material: SS6
- Thickness: 6mm
- Patent Pending

Catalog Number	Description	Side Rail Mtg. Hardware	Mounting Hardware
LHD-121X	1-Hole Hold Down Plate	None Required	(1) M12 HHCS
LHD-123X	3-Hole Hold Down Clamp	Includes (2) M10 SNCB & SFHN	(1) M12 HHCS

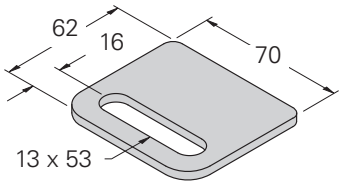

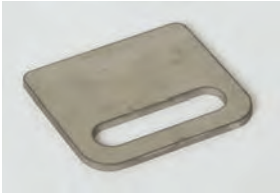

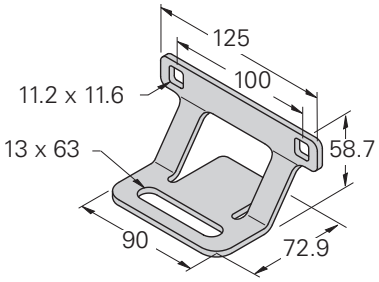

Height	Material	LHD-123X	Span m	Loads kg/m	LHD-121X	Span m	Loads kg/m
HPL Series 125mm	**SS6**		3	345		3	293
			4	166		4	143
			5	99		5	86
			6	90		6	79

Height	Material	LHD-123X	Span m	Loads kg/m	LHD-121X	Span m	Loads kg/m
HPL Series 150mm	**SS6**		3	391		3	345
			4	212		4	184
			5	130		5	113
			6	98		6	96

Dimensions in parentheses are in millimeters unless otherwise specified.

Straight Divider

- Standard length: 3000mm (3m) or 1000mm (1m).
- Order catalog number based on loading depth.
- Supplied with mounting hardware.
- Supplied with 99-9982 divider splice.
- (*) Insert G or SS6

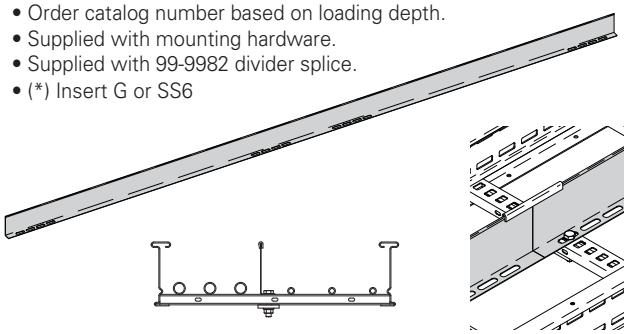

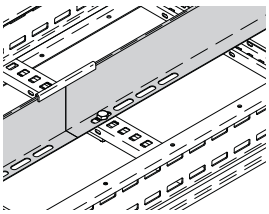

Catalog No.	Side Rail Height mm	Length mm
LSD125(*)-3000	125	3000
LSD150(*)-3000	150	3000

Bendable Divider

- Horizontal Bend Barriers are flexible in order to conform to any horizontal fitting radius. Cut to length.
- Order catalog number based on loading depth.
- Supplied with mounting hardware.
- Standard length is 1000mm (1m), sold individually.
- Supplied with 99-9982 divider splice.
- (*) Insert G or SS6

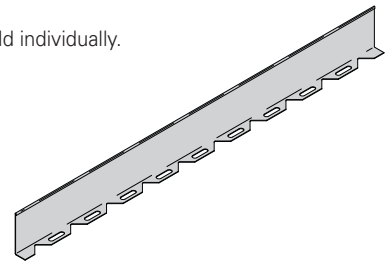

Catalog No.	Side Rail Height mm	Length mm
LBD125(*)-1000	125	1000
LBD150(*)-1000	150	1000

Vertical Dividers

- Vertical Bend Barriers are preformed to conform to a specific vertical fitting.
- Supplied with mounting hardware and a 99-9982 Divider Splice.
- (*) Insert G or SS6 for finish
- (**) Insert 30, 45, 60 or 90 for degrees
- (***) Insert 300 for 300mm, 600 for 600mm, 900 for 900mm, or 1200 for 1200mm for radius

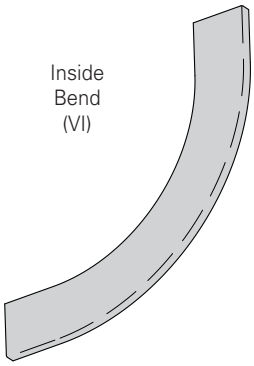

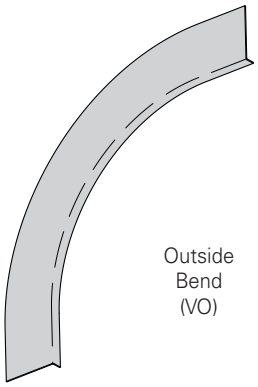

Side Rail Height	Catalog No. Inside Bend	Catalog No. Outside Bend	Divider Height mm
125	**LID125(*)(**)(***)**	**LOD125(*)(**)(***)**	100
150	**LID150(*)(**)(***)**	**LOD150(*)(**)(***)**	125

Divider Splice

- Plastic splice holds adjoining barrier strips in straight alignment.

Catalog No.
99-9982

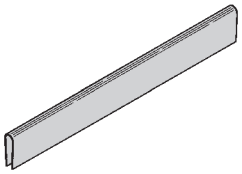

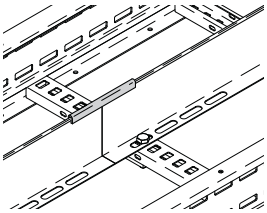

Steel Cable Ladder

Dimensions in parentheses are in millimeters unless otherwise specified.

Slotted Steel Cable Ladder - Fittings

B-Line Cable Ladder Fittings are designed to support cables as they transition directions. Side rails are C-shaped with standard 300mm rung spacing.

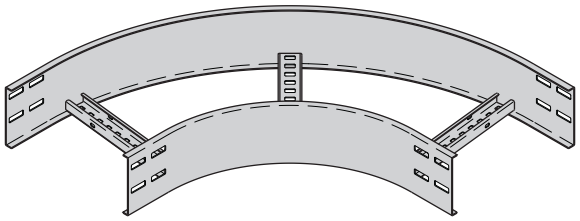

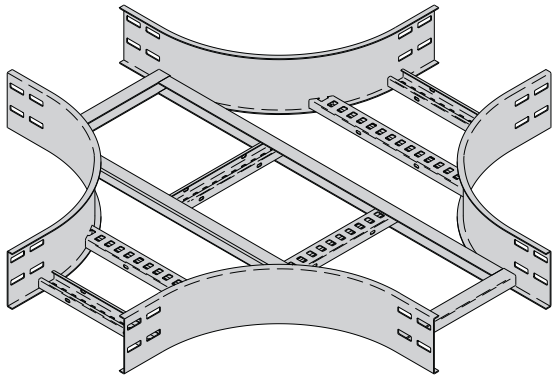

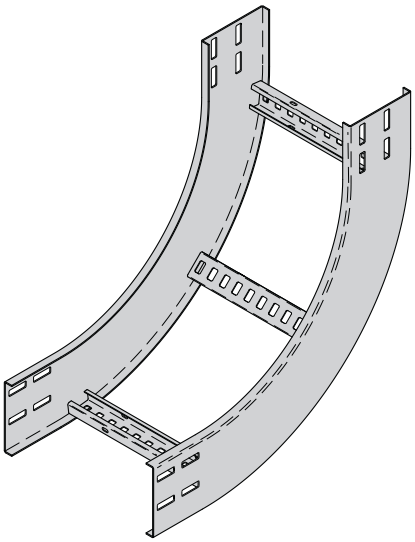

Fittings engineered with 100mm tangents for splicing integrity.

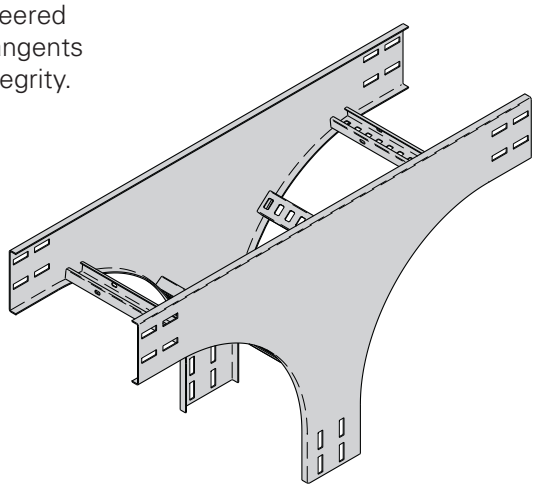

Fittings Part Numbering

Prefix | Suffix

Example: **125 G 300 C D 20C LVO - 0600 - 90 R0600**

Height (mm)	Material	Rung Spacing (mm)	* Rung Shape	* Rung Orientation	Side Rail	Ladder Fitting Type	Width (mm)	Angle † (°)	Radius (mm)
125 = 125mm	** **G** = Galvanized Steel	**300** = 300mm	**C** = Standard Profile	**D** = Down	**12C** = HPL Series	**LHB** = Horizontal Bend	**0150** = 150mm	**30**	**R0300** = 300mm
150 = 150mm	**X** = Stainless Steel 316				**15C** = SDL Series	**LVI** = Vertical Inside Bend	**0300** = 300mm	**45**	**R0450** = 450mm
					20C = HDL Series	**LVO** = Vertical Outside Bend	**0450** = 450mm	**60**	**R0600** = 600mm
						LHT = Horizontal Tee †	**0600** = 600mm	**90**	**R0750** = 750mm
						LHX = Horizontal Cross †	**0750** = 750mm		**R0900** = 900mm
						LVTD = Vertical Tee Down †	**0900** = 900mm		**R1200** = 1200mm
						LVTU = Vertical Tee Up †			
						LCSF = Cable Support Fitting †			

*** Other Options Available**
See "Cable Ladder Construction"

**** Not Available with HPL Series**

† No angle designation required on these fittings.
See fitting page when creating part numbers.

All dimensions are in millimeters unless otherwise specified.

Horizontal Bends 90° (LHB)

Splice plates not supplied with fittings.
Order standard splice plates separately from page CL-6.
One (1) pair required to connect to system.

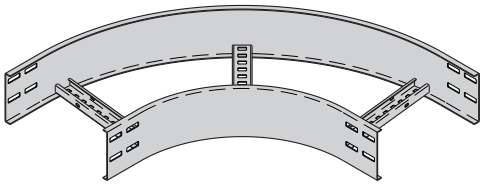

90˚ Horizontal Bend

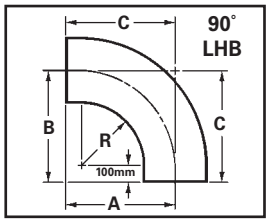

Bend Radius R mm	Ladder Width mm	90˚ Horizontal Bend Catalog No.	Dimensions A mm	B mm	C mm
300	150	**(Prefix)LHB-0150-90R0300**	475	475	475
	300	**(Prefix)LHB-0300-90R0300**	550	550	550
	450	**(Prefix)LHB-0450-90R0300**	625	625	625
	600	**(Prefix)LHB-0600-90R0300**	700	700	700
	750	**(Prefix)LHB-0750-90R0300**	775	775	775
	900	**(Prefix)LHB-0900-90R0300**	850	850	850
600	150	**(Prefix)LHB-0150-90R0600**	775	775	775
	300	**(Prefix)LHB-0300-90R0600**	850	850	850
	450	**(Prefix)LHB-0450-90R0600**	925	925	925
	600	**(Prefix)LHB-0600-90R0600**	1000	1000	1000
	750	**(Prefix)LHB-0750-90R0600**	1075	1075	1075
	900	**(Prefix)LHB-0900-90R0600**	1150	1150	1150

(Prefix) See page CL-11 for catalog number prefix.
Width dimensions are to inside wall. Manufacturing tolerances apply to all dimensions.

Note: For 450mm, 750mm, 900mm, and 1200mm bend radius dimensions, download submittals at www.bline.com/iec

Horizontal Bends 60° (LHB)

Splice plates not supplied with fittings.
Order standard splice plates separately from page CL-6.
One (1) pair required to connect to system.

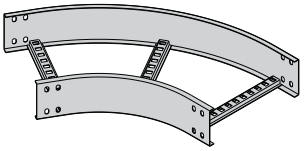

60˚ Horizontal Bend

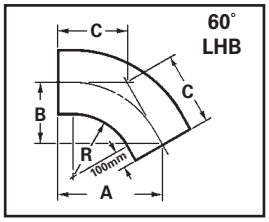

Bend Radius R mm	Ladder Width mm	60˚ Horizontal Bend Catalog No.	Dimensions A mm	B mm	C mm
300	150	**(Prefix)LHB-0150-60R0300**	476	275	317
	300	**(Prefix)LHB-0300-60R0300**	541	312	360
	450	**(Prefix)LHB-0450-60R0300**	606	350	404
	600	**(Prefix)LHB-0600-60R0300**	670	387	447
	750	**(Prefix)LHB-0750-60R0300**	735	425	490
	900	**(Prefix)LHB-0900-60R0300**	800	425	534
600	150	**(Prefix)LHB-0150-60R0600**	735	425	490
	300	**(Prefix)LHB-0300-60R0600**	800	462	534
	450	**(Prefix)LHB-0450-60R0600**	865	500	577
	600	**(Prefix)LHB-0600-60R0600**	930	537	620
	750	**(Prefix)LHB-0750-60R0600**	995	575	663
	900	**(Prefix)LHB-0900-60R0600**	1060	612	707

(Prefix) See page CL-11 for catalog number prefix.
Width dimensions are to inside wall. Manufacturing tolerances apply to all dimensions.

Note: For 450mm, 750mm, 900mm, and 1200mm bend radius dimensions, download submittals at www.bline.com/iec

Horizontal Bends 45° (LHB)

Splice plates not supplied with fittings.
Order standard splice plates separately from page CL-6.
One (1) pair required to connect to system.

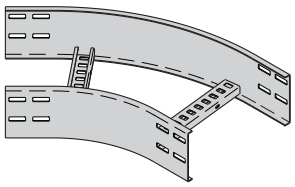

45˚ Horizontal Bend

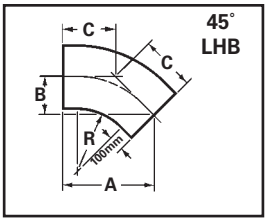

Bend Radius R mm	Ladder Width mm	45˚ Horizontal Bend Catalog No.	Dimensions A mm	B mm	C mm
300	150	(Prefix)LHB-0150-45R0300	437	181	256
	300	(Prefix)LHB-0300-45R0300	490	203	287
	450	(Prefix)LHB-0450-45R0300	543	225	318
	600	(Prefix)LHB-0600-45R0300	596	247	349
	750	(Prefix)LHB-0750-45R0300	649	269	380
	900	(Prefix)LHB-0900-45R0300	702	291	411
600	150	(Prefix)LHB-0150-45R0600	649	269	380
	300	(Prefix)LHB-0300-45R0600	702	291	411
	450	(Prefix)LHB-0450-45R0600	755	313	443
	600	(Prefix)LHB-0600-45R0600	809	335	474
	750	(Prefix)LHB-0750-45R0600	862	357	505
	900	(Prefix)LHB-0900-45R0600	915	379	536

(Prefix) See page CL-11 for catalog number prefix.
Width dimensions are to inside wall. Manufacturing tolerances apply to all dimensions.

Note: For 450mm, 750mm, 900mm, and 1200mm bend radius dimensions, download submittals at www.bline.com/iec

Horizontal Bends 30° (LHB)

Splice plates not supplied with fittings.
Order standard splice plates separately from page CL-6.
One (1) pair required to connect to system.

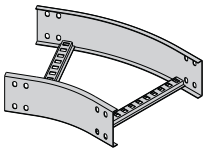

30˚ Horizontal Bend

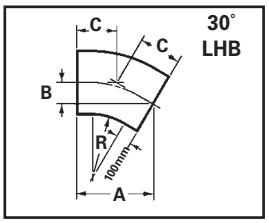

Bend Radius R mm	Ladder Width mm	30˚ Horizontal Bend Catalog No.	Dimensions A mm	B mm	C mm
300	150	(Prefix)LHB-0150-30R0300	375	100	200
	300	(Prefix)LHB-0300-30R0300	412	110	221
	450	(Prefix)LHB-0450-30R0300	450	120	241
	600	(Prefix)LHB-0600-30R0300	487	130	261
	750	(Prefix)LHB-0750-30R0300	525	140	281
	900	(Prefix)LHB-0900-30R0300	562	150	301
600	150	(Prefix)LHB-0150-30R0600	525	140	281
	300	(Prefix)LHB-0300-30R0600	562	150	301
	450	(Prefix)LHB-0450-30R0600	600	160	321
	600	(Prefix)LHB-0600-30R0600	627	170	341
	750	(Prefix)LHB-0750-30R0600	675	180	361
	900	(Prefix)LHB-0900-30R0600	712	190	381

(Prefix) See page CL-11 for catalog number prefix.
Width dimensions are to inside wall. Manufacturing tolerances apply to all dimensions.

Note: For 450mm, 750mm, 900mm, and 1200mm bend radius dimensions, download submittals at www.bline.com/iec

Vertical Outside Bends 90˚ & 60° (LVO)

Splice plates not supplied with fittings.
Order standard splice plates separately from page CL-6.
One (1) pair required to connect to system.

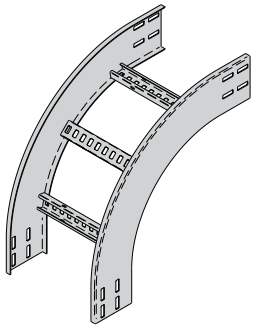

90˚ Vertical Outside

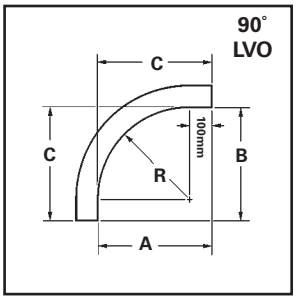

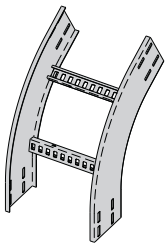

60˚ Vertical Outside

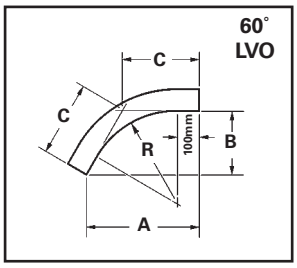

Bend Radius R	Ladder Width Insert	Vert. Outside Bend	VO Side Rail Height 125mm - 150mm A	B	C
mm	mm	Catalog No.	mm	mm	mm
90°					
300	150	**(Prefix)LVO-0150-90R0300**	400	400	400
	300	**(Prefix)LVO-0300-90R0300**			
	450	**(Prefix)LVO-0450-90R0300**			
	600	**(Prefix)LVO-0600-90R0300**			
	750	**(Prefix)LVO-0750-90R0300**			
	900	**(Prefix)LVO-0900-90R0300**			
600	150	**(Prefix)LVO-0150-90R0600**	700	700	700
	300	**(Prefix)LVO-0300-90R0600**			
	450	**(Prefix)LVO-0450-90R0600**			
	600	**(Prefix)LVO-0600-90R0600**			
	750	**(Prefix)LVO-0750-90R0600**			
	900	**(Prefix)LVO-0900-90R0600**			
60°					
300	150	**(Prefix)LVO-0150-60R0300**	410	237	273
	300	**(Prefix)LVO-0390-60R0300**			
	450	**(Prefix)LVO-0450-60R0300**			
	600	**(Prefix)LVO-0600-60R0300**			
	750	**(Prefix)LVO-0750-60R0300**			
	900	**(Prefix)LVO-0900-60R0300**			
600	150	**(Prefix)LVO-0150-60R0600**	670	386	446
	300	**(Prefix)L(VO-0300-60R0600**			
	450	**(Prefix)LVO-0450-60R0600**			
	600	**(Prefix)LVO-0600-60R0600**			
	750	**(Prefix)LVO-0750-60R0600**			
	900	**(Prefix)LVO-0900-60R0600**			

(Prefix) See page CL-11 for catalog number prefix.
Manufacturing tolerances apply to all dimensions.

Note: For 450mm, 750mm, 900mm, and 1200mm bend radius dimensions, download submittals at www.bline.com/iec

All dimensions are in millimeters unless otherwise specified.

Vertical Inside Bends 90˚ & 60° (LVI)

Splice plates not supplied with fittings.
Order standard splice plates separately from page CL-6.
One (1) pair required to connect to system.

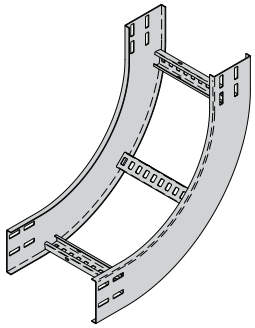

90˚ Vertical Inside

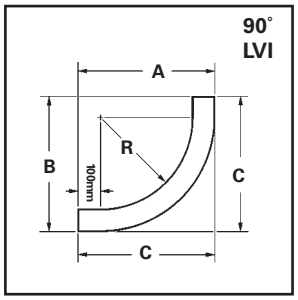

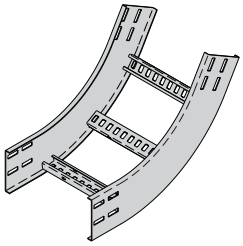

60˚ Vertical Inside

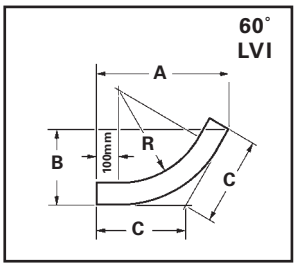

Bend Radius R mm	Ladder Width Insert mm	Vert. Inside Bend Catalog No.	VI Side Rail Height 125mm A mm	125mm B mm	125mm C mm	150mm A mm	150mm B mm	150mm C mm
90°								
300	150	**(Prefix)LVI-0150-90R0300**	525	525	525	550	550	550
	300	**(Prefix)LVI-0300-90R0300**						
	450	**(Prefix)LVI-0450-90R0300**						
	600	**(Prefix)LVI-0600-90R0300**						
	750	**(Prefix)LVI-0750-90R0300**						
	900	**(Prefix)LVI-0900-90R0300**						
600	150	**(Prefix)LVI-0150-90R0600**	825	825	825	850	850	850
	300	**(Prefix)LVI-0300-90R0600**						
	450	**(Prefix)LVI-0450-90R0600**						
	600	**(Prefix)LVI-0600-90R0600**						
	750	**(Prefix)LVI-0750-90R0600**						
	900	**(Prefix)LVI-0900-90R0600**						
60°								
300	150	**(Prefix)LVI-0150-60R0300**	518	300	345	540	312	360
	300	**(Prefix)LVI-0390-60R0300**						
	450	**(Prefix)LVI-0450-60R0300**						
	600	**(Prefix)LVI-0600-60R0300**						
	750	**(Prefix)LVI-0750-60R0300**						
	900	**(Prefix)LVI-0900-60R0300**						
600	150	**(Prefix)LVI-0150-60R0600**	778	449	519	780	462	533
	300	**(Prefix)LVI-0300-60R0600**						
	450	**(Prefix)LVI-0450-60R0600**						
	600	**(Prefix)LVI-0600-60R0600**						
	750	**(Prefix)LVI-0750-60R0600**						
	900	**(Prefix)LVI-0900-60R0600**						

(Prefix) See page CL-11 for catalog number prefix.
Manufacturing tolerances apply to all dimensions.

Note: For 450mm, 750mm, 900mm, and 1200mm bend radius dimensions, download submittals at www.bline.com/iec

Vertical Bends 45˚ & 30° (LVO)

Splice plates not supplied with fittings.
Order standard splice plates separately from page CL-6.
One (1) pair required to connect to system.

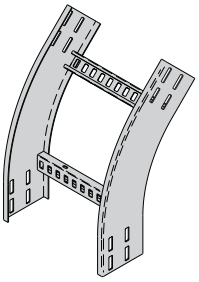

45˚ Vertical Outside

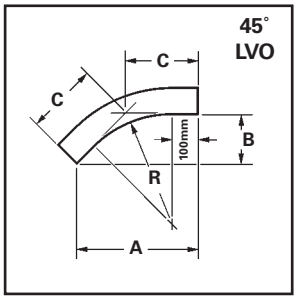

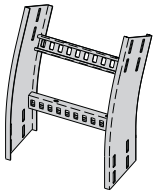

30˚ Vertical Outside

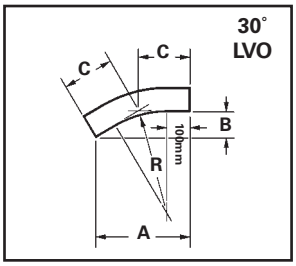

Bend Radius R mm	Ladder Width Insert mm	Vert. Outside Bend Catalog No.	VO Side Rail Height 125mm - 150mm A mm	B mm	C mm
45°					
300	150	**(Prefix)LVO-0150-45R0300**	383	159	226
	300	**(Prefix)LVO-0300-45R0300**			
	450	**(Prefix)LVO-0450-45R0300**			
	600	**(Prefix)LVO-0600-45R0300**			
	750	**(Prefix)LVO-0750-45R0300**			
	900	**(Prefix)LVO-0900-45R0300**			
600	150	**(Prefix)LVO-0150-45R0600**	595	246	373
	300	**(Prefix)LVO-0300-45R0600**			
	450	**(Prefix)LVO-0450-45R0600**			
	600	**(Prefix)LVO-0600-45R0600**			
	750	**(Prefix)LVO-0750-45R0600**			
	900	**(Prefix)LVO-0900-45R0600**			
30°					
300	150	**(Prefix)LVO-0150-30R0300**	337	90	180
	300	**(Prefix)LVO-0390-30R0300**			
	450	**(Prefix)LVO-0450-30R0300**			
	600	**(Prefix)LVO-0600-30R0300**			
	750	**(Prefix)LVO-0750-30R0300**			
	900	**(Prefix)LVO-0900-30R0300**			
600	150	**(Prefix)LVO-0150-30R0600**	487	130	261
	300	**(Prefix)L(VO-0300-30R0600**			
	450	**(Prefix)LVO-0450-30R0600**			
	600	**(Prefix)LVO-0600-30R0600**			
	750	**(Prefix)LVO-0750-30R0600**			
	900	**(Prefix)LVO-0900-30R0600**			

(Prefix) See page CL-11 for catalog number prefix.
Manufacturing tolerances apply to all dimensions.

Note: For 450mm, 750mm, 900mm, and 1200mm bend radius dimensions, download submittals at www.bline.com/iec

Vertical Bends 45˚ & 30° (LVI)

Splice plates not supplied with fittings.
Order standard splice plates separately from page CL-6.
One (1) pair required to connect to system.

45˚ Vertical Inside

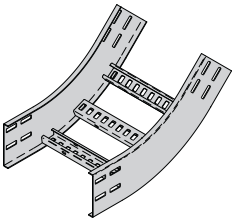

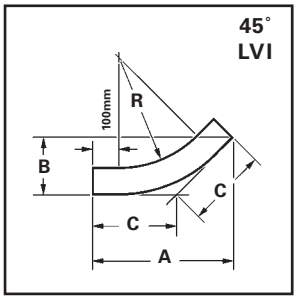

30˚ Vertical Inside

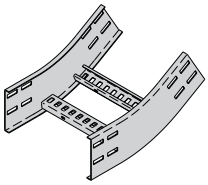

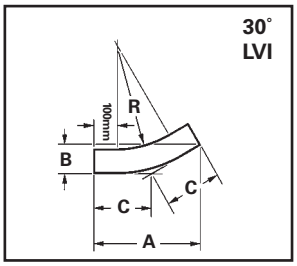

Bend Radius R	Ladder Width Insert	Vert. Inside Bend	VI Side Rail Height					
			125mm			150mm		
			A	B	C	A	B	C
mm	mm	Catalog No.	mm	mm	mm	mm	mm	mm
45°								
300	150	**(Prefix)LVI-0150-45R0300**	469	195	276	681	283	400
	300	**(Prefix)LVI-0300-45R0300**						
	450	**(Prefix)LVI-0450-45R0300**						
	600	**(Prefix)LVI-0600-45R0300**						
	750	**(Prefix)LVI-0750-45R0300**						
	900	**(Prefix)LVI-0900-45R0300**						
600	150	**(Prefix)LVI-0150-45R0600**	487	203	286	699	290	411
	300	**(Prefix)LVI-0300-45R0600**						
	450	**(Prefix)LVI-0450-45R0600**						
	600	**(Prefix)LVI-0600-45R0600**						
	750	**(Prefix)LVI-0750-45R0600**						
	900	**(Prefix)LVI-0900-45R0600**						
30°								
300	150	**(Prefix)LVI-0150-30R0300**	399	107	214	417	110	221
	300	**(Prefix)LVI-0390-30R0300**						
	450	**(Prefix)LVI-0450-30R0300**						
	600	**(Prefix)LVI-0600-30R0300**						
	750	**(Prefix)LVI-0750-30R0300**						
	900	**(Prefix)LVI-0900-30R0300**						
600	150	**(Prefix)LVI-0150-30R0600**	549	147	294	562	150	301
	300	**(Prefix)LVI-0300-30R0600**						
	450	**(Prefix)LVI-0450-30R0600**						
	600	**(Prefix)LVI-0600-30R0600**						
	750	**(Prefix)LVI-0750-30R0600**						
	900	**(Prefix)LVI-0900-30R0600**						

(Prefix) See page CL-11 for catalog number prefix.
Manufacturing tolerances apply to all dimensions.

Note: For 450mm, 750mm, 900mm, and 1200mm bend radius dimensions, download submittals at www.bline.com/iec

Horizontal Tee (LHT)

Splice plates not supplied with fittings.
Order standard splice plates separately from page CL-6.
Two (2) pair required to connect to system.

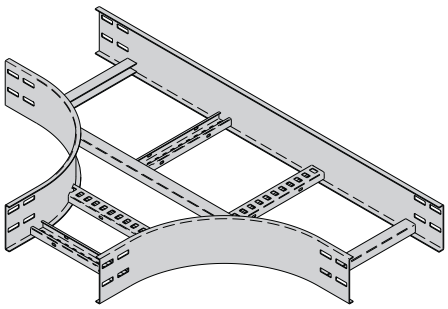

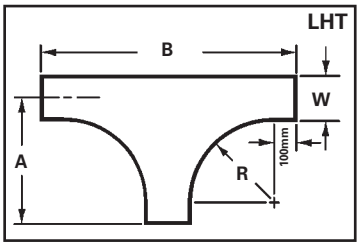

Bend Radius R mm	Ladder Width mm	Horizontal Cross Catalog Number	Dimensions A mm	Dimensions B mm
300	150	(Prefix)LHT-0150-R0300	475	950
	300	(Prefix)LHT-0300-R0300	550	1000
	450	(Prefix)LHT-0450-R0300	625	1250
	600	(Prefix)LHT-0600-R0300	700	1400
	750	(Prefix)LHT-0750-R0300	775	1500
	900	(Prefix)LHT-0900-R0300	850	1700
600	150	(Prefix)LHT-0150-R0600	775	1550
	300	(Prefix)LHT-0300-R0600	850	1700
	450	(Prefix)LHT-0450-R0600	925	1850
	600	(Prefix)LHT-0600-R0600	1000	2000
	750	(Prefix)LHT-0750-R0600	1075	2150
	900	(Prefix)LHT-0900-R0600	1150	2300

(Prefix) See page CL-11 for catalog number prefix.
Width dimensions are to inside wall. Manufacturing tolerances apply to all dimensions.

Note: For 450mm, 750mm, 900mm, and 1200mm bend radius dimensions, download submittals at www.bline.com/iec

Horizontal Cross (LHX)

Splice plates not supplied with fittings.
Order standard splice plates separately from page CL-6.
Three (3) pair required to connect to system.

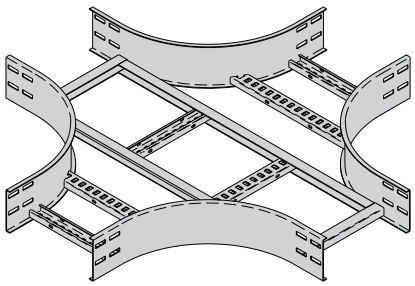

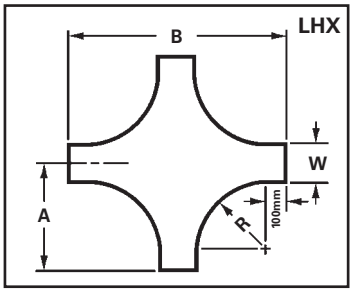

Bend Radius R mm	Ladder Width mm	Horizontal Cross Catalog Number	Dimensions A mm	Dimensions B mm
300	150	(Prefix)LHX-0150-R0300	475	900
	300	(Prefix)LHX-0300-R0300	550	1100
	450	(Prefix)LHX-0450-R0300	625	1250
	600	(Prefix)LHX-0600-R0300	700	1400
	750	(Prefix)LHX-0750-R0300	775	1550
	900	(Prefix)LHX-0900-R0300	850	1700
600	150	(Prefix)LHX-0150-R0600	775	1550
	300	(Prefix)LHX-0300-R0600	850	1700
	450	(Prefix)LHX-0450-R0600	925	1850
	600	(Prefix)LHX-0600-R0600	1000	2000
	750	(Prefix)LHX-0750-R0600	1075	2150
	900	(Prefix)LHX-0900-R0600	1150	2300

(Prefix) See page CL-11 for catalog number prefix.
Width dimensions are to inside wall. Manufacturing tolerances apply to all dimensions.

Note: For 450mm, 750mm, 900mm, and 1200mm bend radius dimensions, download submittals at www.bline.com/iec

All dimensions are in millimeters unless otherwise specified.

Vertical Tee Up/Down (LVTU/LVTD)

Splice plates not supplied with fittings.
Order standard splice plates separately from page CL-6.
Two (2) pair required to connect to system.

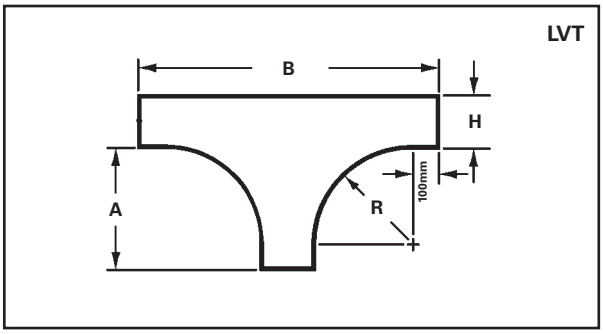

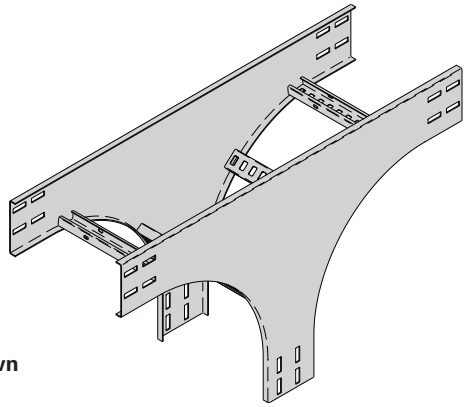

Down

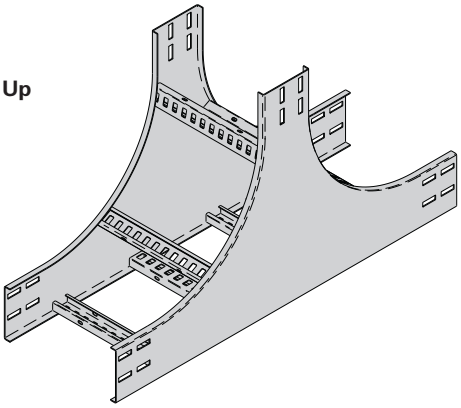

Up

Bend Radius R mm	Ladder Width mm	Vertical Tee Down Down Catalog No.	Vertical Tee Up Up Catalog No.	Side Rail Height "H" 125mm A mm	125mm B mm	150mm A mm	150mm B mm
300	150	(Prefix)LVTD-0150-R0300	(Prefix)LVTU-0150-R0300	400	925	400	950
	300	(Prefix)LVTD-0300-R0300	(Prefix)LVTU-0300-R0300				
	450	(Prefix)LVTD-0450-R0300	(Prefix)LVTU-0450-R0300				
	600	(Prefix)LVTD-0600-R0300	(Prefix)LVTU-0600-R0300				
	750	(Prefix)LVTD-0750-R0300	(Prefix)LVTU-0750-R0300				
	900	(Prefix)LVTD-0900-R0300	(Prefix)LVTU-0900-R0300				
600	150	(Prefix)LVTD-0150-R0600	(Prefix)LVTU-0150-R0600	700	1525	700	1550
	300	(Prefix)LVTD-0300-R0600	(Prefix)LVTU-0300-R0600				
	450	(Prefix)LVTD-0450-R0600	(Prefix)LVTU-0450-R0600				
	600	(Prefix)LVTD-0600-R0600	(Prefix)LVTU-0600-R0600				
	750	(Prefix)LVTD-0750-R0600	(Prefix)LVTU-0750-R0600				
	900	(Prefix)LVTD-0900-R0600	(Prefix)LVTU-0900-R0600				

(Prefix) See page CL-11 for catalog number prefix.
Manufacturing tolerances apply to all dimensions.

Note: For 450mm, 750mm, 900mm, and 1200mm bend radius dimensions, download submittals at www.bline.com/iec

Cable Support Fittings (LCSF)

Splice plates not supplied with fittings.
Order standard splice plates separately from page CL-6.
One (1) pair required to connect to system.

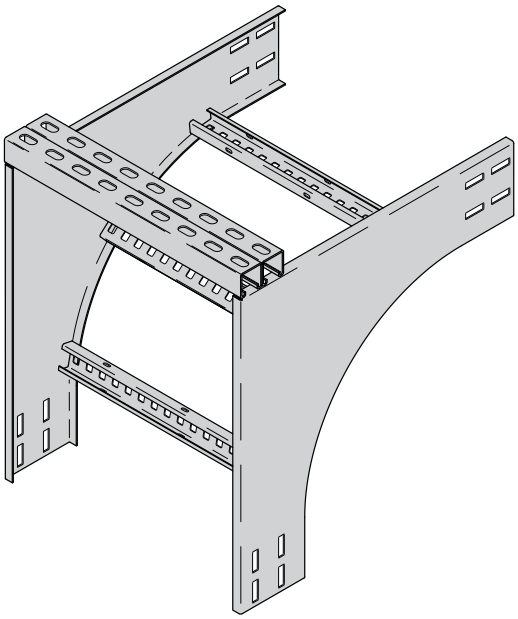

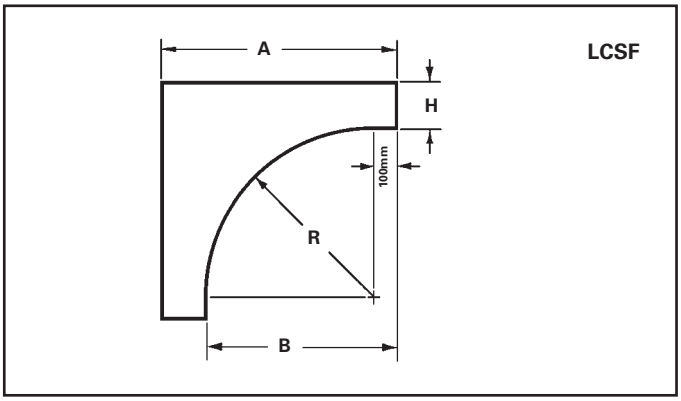

This fitting is recommended for use at the top of vertical runs to support the weight of the cables. The top cross brace is drilled for installing eye bolts, ordered separately.

Bend Radius R mm	Ladder Width mm	Catalog No.	Side Rail Height "H" 125mm A mm	125mm B mm	150mm A mm	150mm B mm
300	150	**(Prefix)LCSF-0150-R0300**	525	400	550	400
	300	**(Prefix)LCSF-0300-R0300**				
	450	**(Prefix)LCSF-0450-R0300**				
	600	**(Prefix)LCSF-0600-R0300**				
	750	**(Prefix)LCSF-0750-R0300**				
	900	**(Prefix)LCSF-0900-R0300**				
600	150	**(Prefix)LCSF-0150-R0600**	825	700	850	700
	300	**(Prefix)LCSF-0300-R0600**				
	450	**(Prefix)LCSF-0450-R0600**				
	600	**(Prefix)LCSF-0600-R0600**				
	750	**(Prefix)LCSF-0750-R0600**				
	900	**(Prefix)LCSF-0900-R0600**				

(Prefix) See page CL-11 for catalog number prefix.
Manufacturing tolerances apply to all dimensions.

Note: For 450mm, 750mm, 900mm, and 1200mm bend radius dimensions, download submittals at www.bline.com/iec

Slotted Steel Cable Ladder - Fittings

B-Line Cable Ladder Reducing and Expanding Fittings are designed to support cables as they transition directions. Side rails are C-shaped with standard 300mm rung spacing.

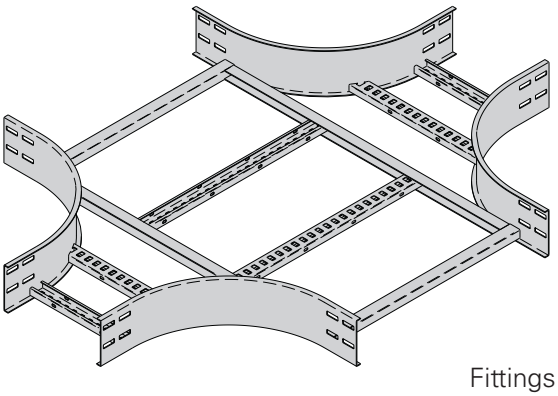

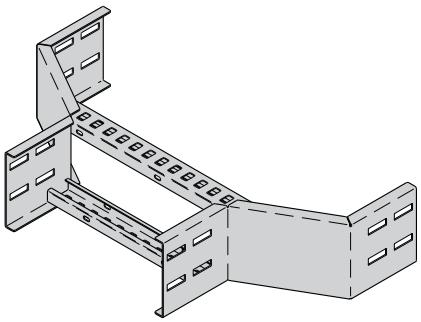

Fittings engineered
with 100mm tangents
for splicing integrity.

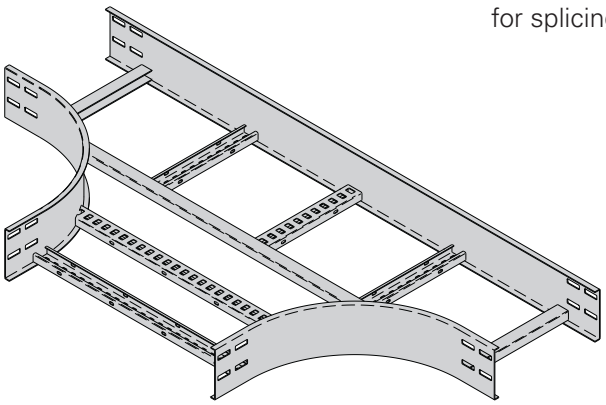

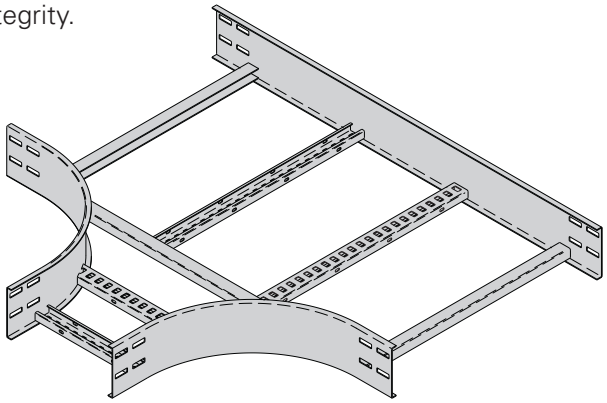

Reducing & Expanding Fittings Part Numbering

Prefix | Suffix

Example: **125 G 300 C D 15C LRR - 0600 - 0300 R0300**

Height	Material	Rung Spacing (mm)	* Rung Shape	* Rung Orientation	Side Rail	Ladder Fitting Type	Width 1	Width 2	Radius
125 = 125mm	** **G** = Galvanized Steel	**300** = 300mm	**C** = Standard Profile	**D** = Down	**12C** = HPL Series	**LRR** = Right Reducer	**0150** = 150mm	**0150** = 150mm	**R0300** = 300mm
150 = 150mm	**X** = Stainless Steel 316				**15C** = SDL Series	**LLR** = Left Reducer	**0300** = 300mm	**0300** = 300mm	**R0450** = 450mm
					20C = HDL Series	**LSR** = Straight Reducer	**0450** = 450mm	**0450** = 450mm	**R0600** = 600mm
						LET = Horizontal Expanding Tee	**0600** = 600mm	**0600** = 600mm	**R0750** = 750mm
						LRT = Horizontal Reducing Tee	**0750** = 750mm	**0750** = 750mm	**R0900** = 900mm
						LRX = Horizontal Expanding/Reducing Cross	**0900** = 900mm	**0900** = 900mm	**R1200** = 1200mm

*** Other Options Available**
See "Cable Ladder Construction"

** Not available with HPL Series

Reducers (LLR, LSR, LRR)

Splice plates not supplied with fittings.
Order standard splice plates separately from page CL-6.
One (1) pair required to connect to system.

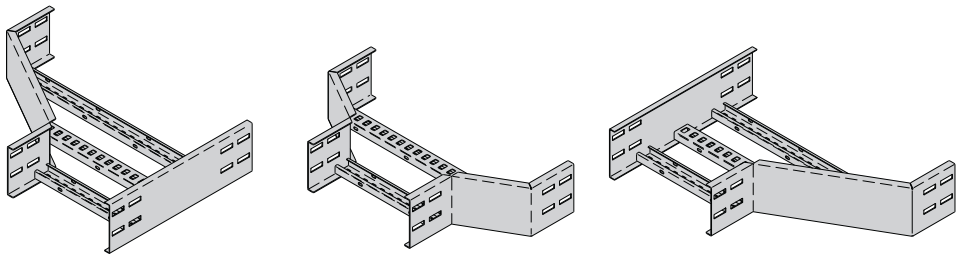

Left Reducer | Straight Reducer | Right Reducer

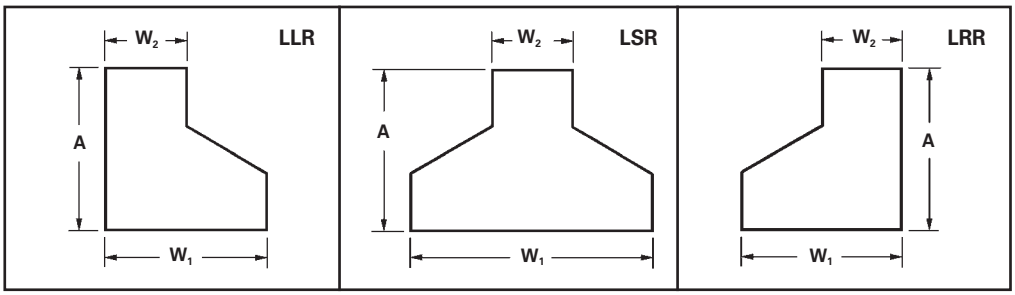

Ladder Width		Left Hand Reducer		Straight Reducer		Right Hand Reducer	
W_1	W_2	Catalog No.	A	Catalog No.	A	Catalog No.	A
mm	mm		mm		mm		mm
300	150	(Prefix)LLR-0300-0150	337	(Prefix)LSR-0300-0150	293	(Prefix)LRR-0300-0150	337
450	150	(Prefix)LLR-0450-0150	423	(Prefix)LSR-0450-0150	337	(Prefix)LRR-0450-0150	423
	300	(Prefix)LLR-0450-0300	337	(Prefix)LSR-0450-0300	293	(Prefix)LRR-0450-0300	337
600	150	(Prefix)LLR-0600-0150	510	(Prefix)LSR-0600-0150	380	(Prefix)LRR-0600-0150	510
	300	(Prefix)LLR-0600-0300	423	(Prefix)LSR-0600-0300	337	(Prefix)LRR-0600-0300	423
	450	(Prefix)LLR-0600-0450	337	(Prefix)LSR-0600-0450	293	(Prefix)LRR-0600-0450	337
750	150	(Prefix)LLR-0750-0150	596	(Prefix)LSR-0750-0150	423	(Prefix)LRR-0750-0150	596
	300	(Prefix)LLR-0750-0300	510	(Prefix)LSR-0750-0300	380	(Prefix)LRR-0750-0300	510
	450	(Prefix)LLR-0750-0450	423	(Prefix)LSR-0750-0450	337	(Prefix)LRR-0750-0450	423
	600	(Prefix)LLR-0750-0600	337	(Prefix)LSR-0750-0600	293	(Prefix)LRR-0750-600	337
900	150	(Prefix)LLR-0900-0150	683	(Prefix)LSR-0900-0150	467	(Prefix)LRR-0900-0150	683
	300	(Prefix)LLR-0900-0300	596	(Prefix)LSR-0900-0300	423	(Prefix)LRR-0900-0300	596
	450	(Prefix)LLR-0900-0450	510	(Prefix)LSR-0900-0450	380	(Prefix)LRR-0900-0450	510
	600	(Prefix)LLR-0900-0600	423	(Prefix)LSR-0900-0600	337	(Prefix)LRR-0900-0600	423
	750	(Prefix)LLR-0900-0750	337	(Prefix)LSR-0900-0750	293	(Prefix)LRR-0900-0750	337

(Prefix) See page CL-21 for catalog number prefix.
Width dimensions are to inside wall.
Manufacturing tolerances apply to all dimensions.

Note: For 450mm, 750mm, 900mm, and 1200mm bend radius dimensions, download submittals at www.bline.com/iec

Horizontal Expanding Tee (LET)

Splice plates not supplied with fittings.
Order standard splice plates separately from page CL-6.
Two (2) pair required to connect to system.

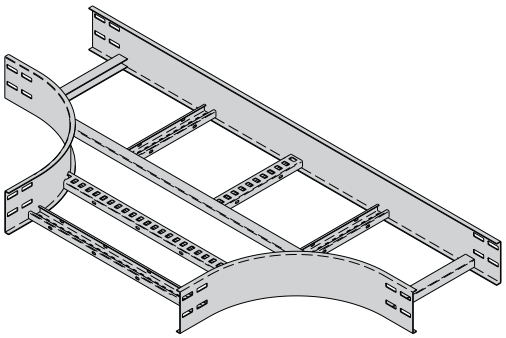

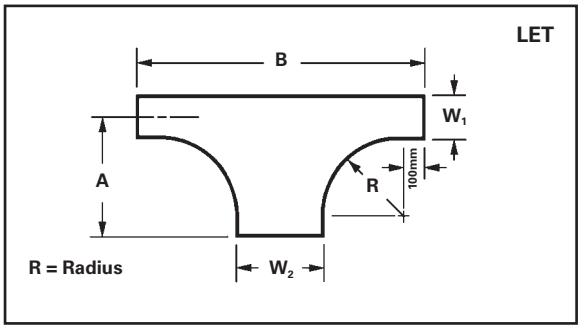

Bend Radius	Ladder Width		Horizontal Expanding Tee	Dimensions	
R mm	W_1 mm	W_2 mm	Catalog Number	A mm	B mm
300	150	300	(Prefix)LET-0150-0300-R0300	475	1100
		450	(Prefix)LET-0150-0450-R0300	475	1250
		600	(Prefix)LET-0150-0600-R0300	475	1400
		750	(Prefix)LET-0150-0750-R0300	475	1550
		900	(Prefix)LET-0150-0900-R0300	475	1700
	300	450	(Prefix)LET-0300-0450-R0300	550	1250
		600	(Prefix)LET-0300-0600-R0300	550	1400
		750	(Prefix)LET-0300-0750-R0300	550	1550
		900	(Prefix)LET-0300-0900-R0300	550	1700
	450	600	(Prefix)LET-0450-0600-R0300	625	1400
		750	(Prefix)LET-0450-0750-R0300	625	1550
		900	(Prefix)LET-0450-0900-R0300	625	1700
	600	750	(Prefix)LET-0600-0750-R0300	700	1550
		900	(Prefix)LET-0600-0900-R0300	700	1700
	750	900	(Prefix)LET-0750-0900-R0300	775	1700
600	150	300	(Prefix)LET-0150-0300-R0600	775	1700
		450	(Prefix)LET-0150-0450-R0600	775	1850
		600	(Prefix)LET-0150-0600-R0600	775	2000
		750	(Prefix)LET-0150-0750-R0600	775	2150
		900	(Prefix)LET-0150-0900-R0600	775	2300
	300	450	(Prefix)LET-0300-0450-R0600	850	1850
		600	(Prefix)LET-0300-0600-R0600	850	2000
		750	(Prefix)LET-0300-0750-R0600	850	2150
		900	(Prefix)LET-0300-0900-R0600	850	2300
	450	600	(Prefix)LET-0450-0600-R0600	925	2000
		750	(Prefix)LET-0450-0750-R0600	925	2150
		900	(Prefix)LET-0450-0900-R0600	925	2300
	600	750	(Prefix)LET-0600-0750-R0600	1000	2150
		900	(Prefix)LET-0600-0900-R0600	1000	2300
	750	900	(Prefix)LET-0750-0900-R0600	1075	2300

(Prefix) See page CL-21 for catalog number prefix.
Width dimensions are to inside wall.
Manufacturing tolerances apply to all dimensions.

Note: For 450mm, 750mm, 900mm, and 1200mm bend radius dimensions, download submittals at www.bline.com/iec

Horizontal Reducing Tee (LRT)

Splice plates not supplied with fittings.
Order standard splice plates separately from page CL-6.
Two (2) pair required to connect to system.

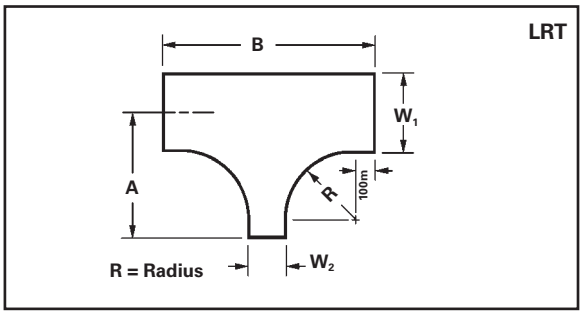

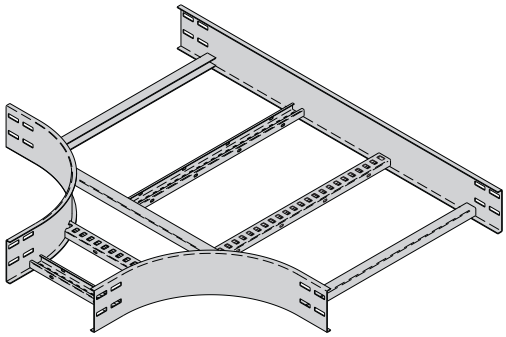

Bend Radius	Ladder Width		Horizontal Reducing Tee	Dimensions	
R mm	W_1 mm	W_2 mm	Catalog Number	A mm	B mm
300	300	150	(Prefix)LRT-0300-0150-R0300	550	950
	450	150	(Prefix)LRT-0450-0150-R0300	625	950
		300	(Prefix)LRT-0450-0300-R0300	625	1100
	600	150	(Prefix)LRT-0600-0150-R0300	700	950
		300	(Prefix)LRT-0600-0300-R0300	700	1100
		450	(Prefix)LRT-0600-0450-R0300	700	1250
	750	150	(Prefix)LRT-0750-0150-R0300	775	950
		300	(Prefix)LRT-0750-0300-R0300	775	1100
		450	(Prefix)LRT-0750-0450-R0300	775	1250
		600	(Prefix)LRT-0750-0600-R0300	775	1400
	900	150	(Prefix)LRT-0900-0150-R0300	850	950
		300	(Prefix)LRT-0900-0300-R0300	850	1100
		450	(Prefix)LRT-0900-0450-R0300	850	1250
		600	(Prefix)LRT-0900-0600-R0300	850	1400
		750	(Prefix)LRT-0900-0750-R0300	850	1550
600	300	150	(Prefix)LRT-0300-0150-R0600	830	1550
	450	150	(Prefix)LRT-0450-0150-R0600	925	1550
		300	(Prefix)LRT-0450-0300-R0600	925	1700
	600	150	(Prefix)LRT-0600-0150-R0600	1000	1550
		300	(Prefix)LRT-0600-0300-R0600	1000	1700
		450	(Prefix)LRT-0600-0450-R0600	1000	1850
	750	150	(Prefix)LRT-0750-0150-R0600	1075	1550
		300	(Prefix)LRT-0750-0300-R0600	1075	1700
		450	(Prefix)LRT-0750-0450-R0600	1075	1850
		600	(Prefix)LRT-0750-0600-R0600	1075	2000
	900	150	(Prefix)LRT-0900-0150-R0600	1150	1550
		300	(Prefix)LRT-0900-0300-R0600	1150	1700
		450	(Prefix)LRT-0900-0450-R0600	1150	1850
		600	(Prefix)LRT-0900-0600-R0600	1150	2000
		750	(Prefix)LRT-0900-0750-R0600	1150	2150

(Prefix) See page CL-21 for catalog number prefix.
Width dimensions are to inside wall.
Manufacturing tolerances apply to all dimensions.

Note: For 450mm, 750mm, 900mm, and 1200mm bend radius dimensions, download submittals at www.bline.com/iec

All dimensions are in millimeters unless otherwise specified.

Horizontal Expanding/Reducing Cross (LRX)

Splice plates not supplied with fittings.
Order standard splice plates separately from page CL-6.
Three (3) pair required to connect to system.

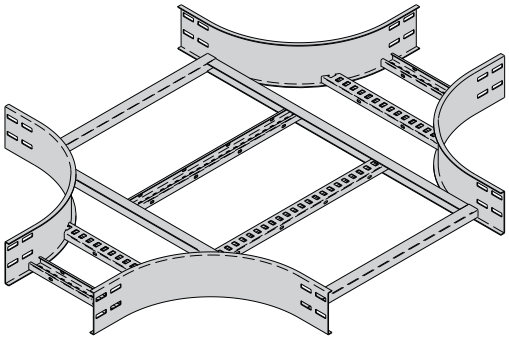

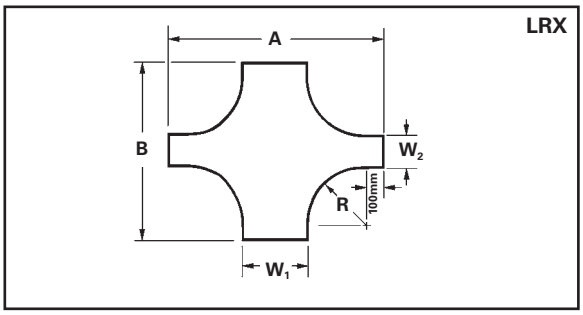

Bend Radius	Ladder Width		Horizontal Reducing Tee	Dimensions	
R mm	W_1 mm	W_2 mm	Catalog Number	A mm	B mm
300	300	150	**(Prefix)LRX-0300-0150-R0300**	1100	950
	450	150	**(Prefix)LRX-0450-0150-R0300**	1250	950
		300	**(Prefix)LRX-0450-0300-R0300**	1250	1100
	600	150	**(Prefix)LRX-0600-0150-R0300**	1400	950
		300	**(Prefix)LRX-0600-0300-R0300**	1400	1100
		450	**(Prefix)LRX-0600-0450-R0300**	1400	1250
	750	150	**(Prefix)LRX-0750-0150-R0300**	1550	950
		300	**(Prefix)LRX-0750-0300-R0300**	1550	1100
		450	**(Prefix)LRX-0750-0450-R0300**	1550	1250
		600	**(Prefix)LRX-0750-0600-R0300**	1550	1400
	900	150	**(Prefix)LRX-0900-0150-R0300**	1700	950
		300	**(Prefix)LRX-0900-0300-R0300**	1700	1100
		450	**(Prefix)LRX-0900-0450-R0300**	1700	1250
		600	**(Prefix)LRX-0900-0600-R0300**	1700	1400
		750	**(Prefix)LRX-0900-0750-R0300**	1700	1550
600	300	150	**(Prefix)LRX-0300-0150-R0600**	1700	1550
	450	150	**(Prefix)LRX-0450-0150-R0600**	1850	1550
		300	**(Prefix)LRX-0450-0300-R0600**	1850	1700
	600	150	**(Prefix)LRX-0600-0150-R0600**	2100	1550
		300	**(Prefix)LRX-0600-0300-R0600**	2100	1700
		450	**(Prefix)LRX-0600-0450-R0600**	2100	1850
	750	150	**(Prefix)LRX-0750-0150-R0600**	2150	1550
		300	**(Prefix)LRX-0750-0300-R0600**	2150	1700
		450	**(Prefix)LRX-0750-0450-R0600**	2150	1850
		600	**(Prefix)LRX-0750-0600-R0600**	2150	2000
	900	150	**(Prefix)LRX-0900-0150-R0600**	2300	1550
		300	**(Prefix)LRX-0900-0300-R0600**	2300	1700
		450	**(Prefix)LRX-0900-0450-R0600**	2300	1850
		600	**(Prefix)LRX-0900-0600-R0600**	2300	2000
		750	**(Prefix)LRX-0900-0750-R0600**	2300	2150

(Prefix) See page CL-21 for catalog number prefix.
Width dimensions are to inside wall.
Manufacturing tolerances apply to all dimensions.

Note: For 450mm, 750mm, 900mm, and 1200mm bend radius dimensions, download submittals at www.bline.com/iec

Covers

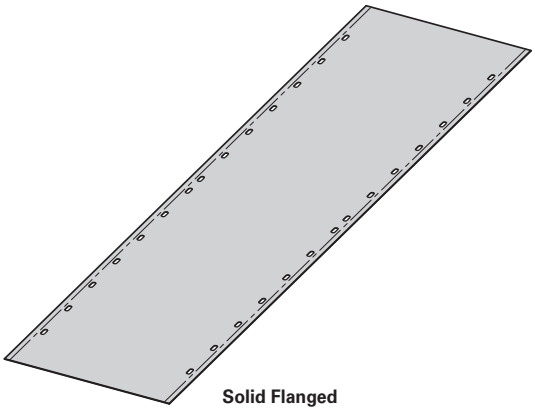

Solid Flanged

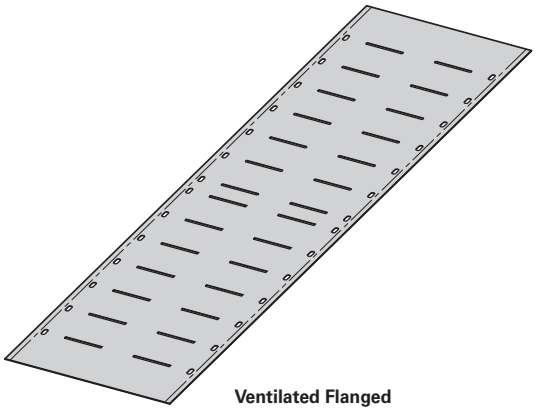

Ventilated Flanged

A full range of covers is available for straight sections and fittings.

Solid covers should be used when maximum enclosure of the cable is desired and no accumulation of heat is expected.

Ventilated covers allow heat to escape.

B-Line recommends that covers be placed on vertical cable ladder runs to a height of 1.5m to 2.5m above the floor to isolate both cables and personnel.

Cover clamps are not included with the cover and must be ordered separately.

Steel Cover Part Numbering

Prefix | Suffix

Example: **CIF S G15 LL - 0600 - 3000**

Flanged Cover

Cover Type

S = Solid

L = Ventilated

P = Peaked

Material

G15 = Galvanized Steel

X10 = Stainless Steel 316

Type

LL = Straight Ladder

Width

0150 = 150mm

0300 = 300mm

0450 = 450mm

0600 = 600mm

0750 = 750mm

0900 = 900mm

Length

3000 = (3.0m)

1500 = (1.5m) for widths 750 (750mm) and 900 (900mm)

Fitting Covers

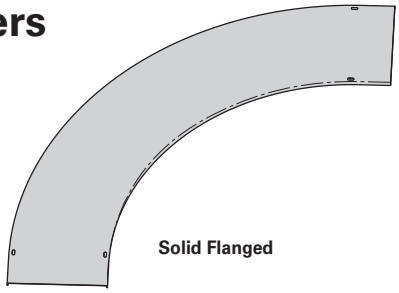

Solid Flanged

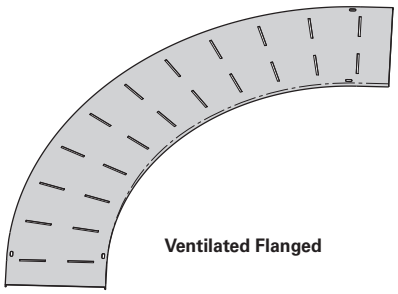

Ventilated Flanged

A full range of covers are available for fittings.

Solid covers should be used when maximum enclosure of the cable is desired and no accumulation of heat is expected.

Ventilated covers allow heat to escape.

B-Line recommends that covers be placed on vertical cable ladder runs to a height of 1.5m to 2.5m above the floor to isolate both cables and personnel.

Flanged covers have a 12mm flange. Cover clamps are not included with the cover and must be ordered separately.

Fitting Covers Part Numbering

Prefix — Suffix

Example: **CCF S G15 LVO - 0600 - 90 R0600 - 150** **(side rail height)**

Flanged Cover	Cover Type	Material
	S = Solid	**G12** =
	L = Louvered	**G15** = Galvanized Steel
	P = Peaked	**X10** = Stainless Steel 316

LHB **Insert LHB Suffix from pages CL-12 & CL-13**
LVI **Insert LVI Suffix from pages CL-15 & CL-17**
LVO **Insert LVO Suffix from pages CL-14 & CL-16 & Side Rail Height**
LHT **Insert LHT Suffix from page CL-18**
LHX **Insert LHX Suffix from page CL-18**
LVTD **Insert LVTD Suffix from page CL-19 & Side Rail Height**
LVTU **Insert LVTU Suffix from page CL-19**
LCSF **Insert LCSF Suffix from page CL-20 & Side Rail Height**

Expanding & Reducing Fitting Covers Part Numbering

Prefix — Suffix

Example: **CCF S X10 LRR - 0600 - 0300 R0300**

Flanged Cover	Cover Type	Material
	S = Solid	**G12** =
	L = Louvered	**G15** = Galvanized Steel
	P = Peaked	**X10** = Stainless Steel 316

LLR **Insert LLR Suffix from pages CL-22**
LRR **Insert LRR Suffix from pages CL-22**
LSR **Insert LSR Suffix from pages CL-22**
LET **Insert LET Suffix from pages CL-23**
LRT **Insert LRT Suffix from pages CL-24**
LRX **Insert LRX Suffix from pages CL-25**

See page CL-28 for cover clamp options.

High Performance Cover Clamp

- Withstands 76m/s (170 MPH) wind loads
- Sold per piece with hardware

(*) Finish: Insert MZ or X for SS6

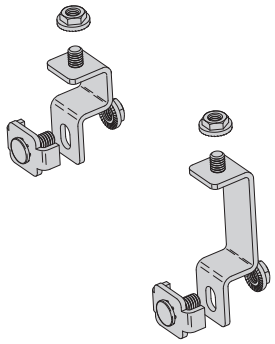

Catalog Number	Description	Raised Height mm	Raised Height In.
LCCSD(*)	Standard Clamp	--	--
LCCSDR(*)	Raised Clamp	35.5	1.4

Number of Clamps for Wind Speeds Up To 76m/s (170 MPH)

Assembly	Cover Size	# of Clamps
Straight	1.5m length	4
Section	3.0m length	6
30° - 60° Horizontal Bend	All radii	4
90°	150mm to 600mm radius	4
Horizontal Bend	900mm to 1200mm radius	6
30° - 60° Vertical Bend	All radii	4
90°	150mm to 600mm radius	4
Vertical Bend	900mm to 1200mm radius	6
Horizontal	150mm to 600mm radius	6
Tee	900mm to 1200mm radius	8
Horizontal	150mm to 600mm radius	8
Cross	900mm to 1200mm radius	12

Visit www.cooperbline.com/ccs for installation instructions and additional clamp quantities for other fittings.

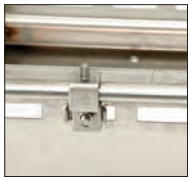

Standard Cover Clamp

- For indoor service only
- Sold per piece with hardware

(*) Finish: Insert G or SS6

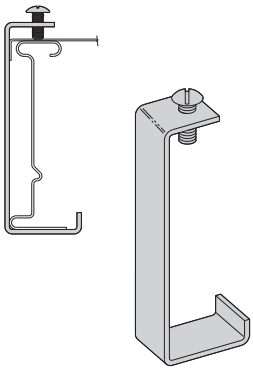

Ladder Height mm	Catalog No.
125	**LCL125(*)**
150	**LCL150(*)**

Quantity of Standard Cover Clamps Required

Assembly	Cover Size	# of Clamps
Straight	1.5m length	4
Section	3.0m length	6
Horizontal & Vertical Bend	All radii	4
Horizontal Tees	All radii	6
Horizontal Crosses	All radii	8

Note: When using the Heavy Duty Cover Clamp, only one-half the number of clamps stated above is required.

Heavy Duty Cover Clamp

- Recommended for outdoor service
- (xx) Insert tray width - 150 to 900
- Includes M10 hardware
- (*) Finishes available: G or SS6

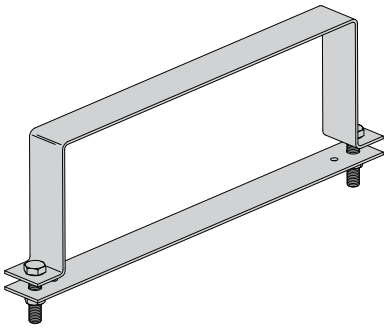

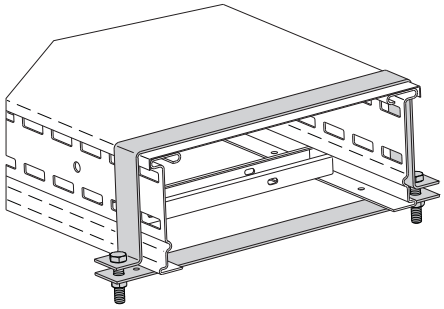

Ladder Height mm	Catalog No.
125	**LCH125(*)(xx)**
150	**LCH150(*)(xx)**

NEMA 12B Rated Aluminum Ladder

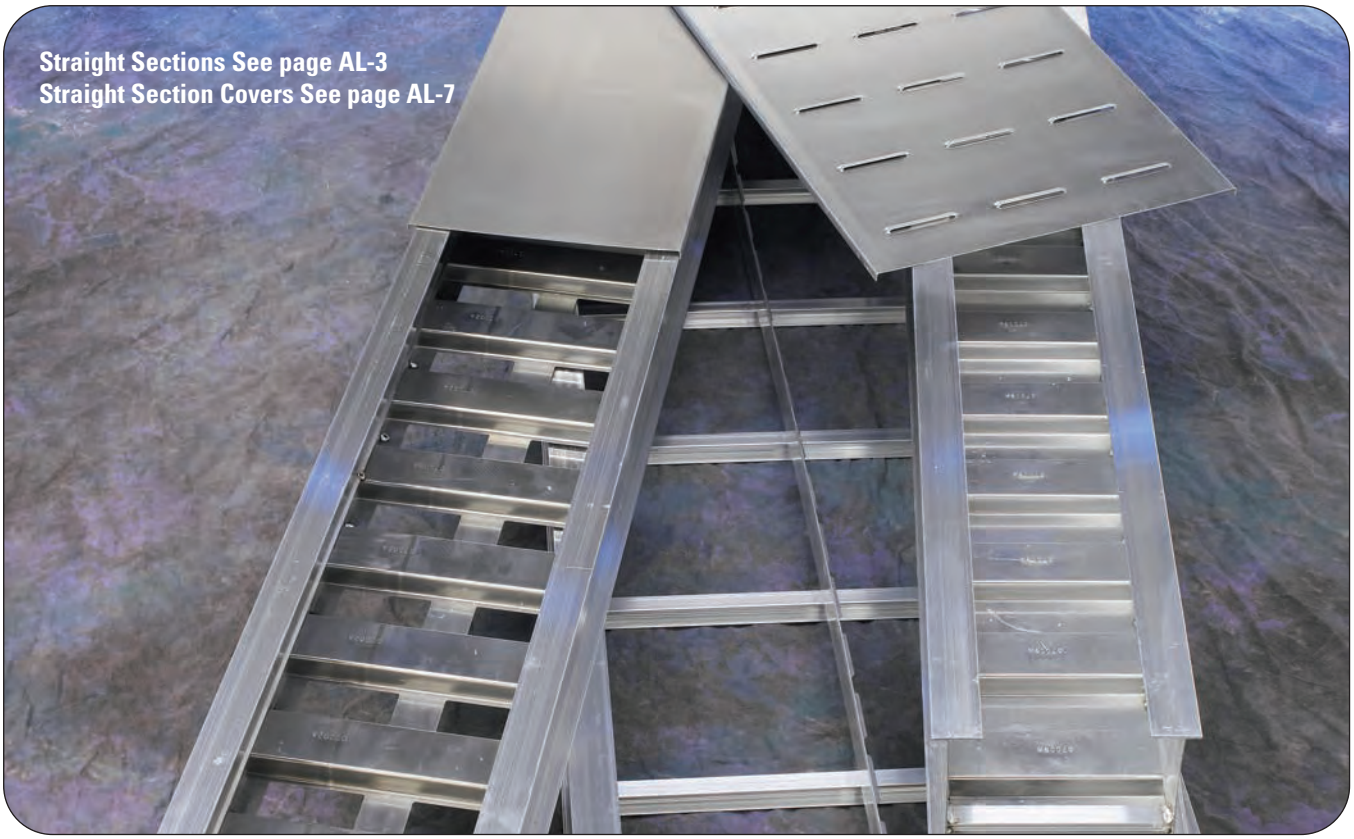

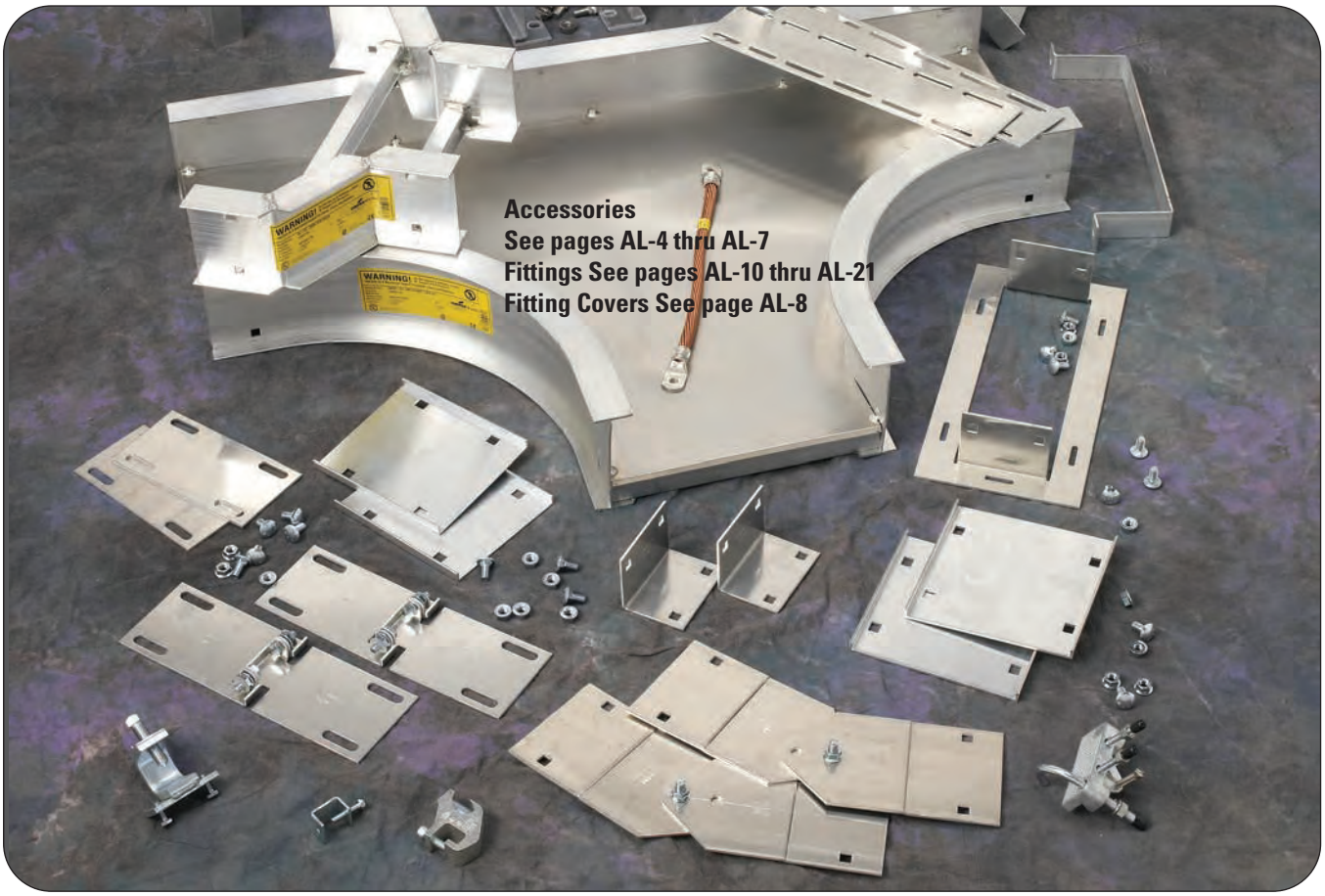

NEMA 12B Series

Side Rails

B-Line I-Beam -- the most efficient cable ladder side rail

Constructed with "Copper-free" 6063-T6 Aluminum Alloy

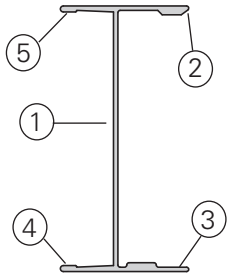

1. **I-beam side rail design**
   - maximizes material effeciency for lower weight
2. **Engineered design: Optimizes load capacity**
3. **Bottom flange inside**
   - positive rung support
4. **Bottom flange outside**
   - lower flange for hold down clamps and expansion guides
5. **Top flange outside**
   - Upper flange for securing the ladder cover or the conduit-to-ladder adapter

Rungs

The rungs can represent 40% of your cable ladder system.

- Optimized material thickness ideal for commercial applications
- For all applications -- 200 lb. concentrated loads

Splices

Unique flex-mount adjustable splice plates:

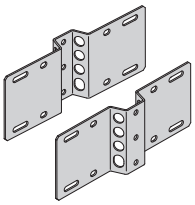

- UL Classified
- Horizontally adjustable up to 90°
- Vertically adjustable up to 15°

Time Saving Accessories

B-Line Clamp/Guide:

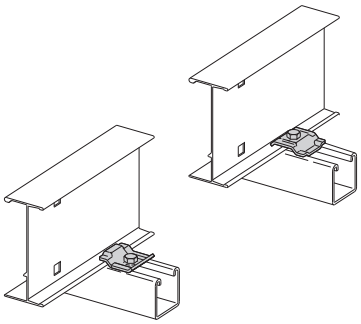

- No-twist design
- Four times the strength of traditional design
- Interchangable between clamp and guide
- Patent # RE35479

Aluminum

RWI04A, RWI05A, RWI06A, and RWI07A Straight Sections

Straight Section Part Numbering

Prefix | Suffix

Example: **RWI 04 A 09 SL - 12 - 120**

Series
RWI

Height
04 = 4″
05 = 5″
06 = 6″
07 = 7″

Material
A = Aluminum

Bottom Type
06 = 6″ Rung Spacing
09 = 9″ Rung Spacing
12 = 12″ Rung Spacing

Construction
SL = Straight Ladder Section

Width
06 = 6″
09 = 9″
12 = 12″
18 = 18″
24 = 24″
30 = 30″
36 = 36″

Length
144 = 12 ft. (3.66m)
120 = 10 ft. (3.00m)

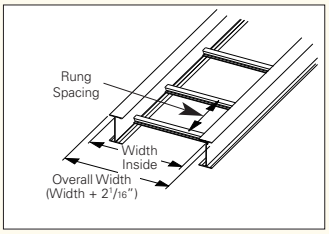

Values are based on simple beam tests per VE-1 on 36″ wide cable ladder with rungs spaced on 12″ centers. The published load safety factor is 1.5. To convert 1.5 safety factor to 2.0, multiply the published load by 0.75. To obtain mid-span deflection, multiply a load by the deflection multiplier. Cable ladder must be supported on spans shorter than or equal to the length of the tray. These systems will support without collapse a 200 lb. concentrated load.

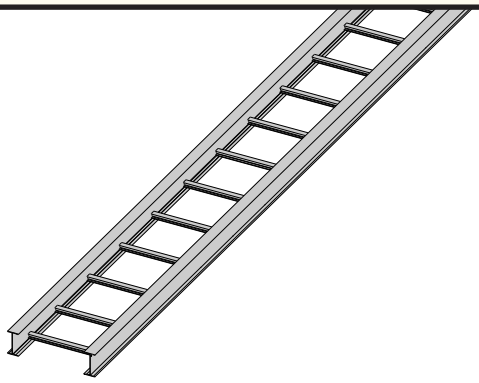

B-Line Series & Side Rail Dimensions		NEMA, CSA & UL Classifications	Span ft	Span meters	Load lbs/ft	Load kg/m	Deflection Multiplier		Design Factors for Two Rails	
RWI04A	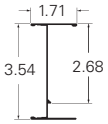	NEMA: 12B	6	1.8	224	333	0.0015	0.025	Area = 0.93 in²	Area = 5.99 cm²
		UL Cross-Sectional	10	3.0	108	161	0.0115	0.196	Sx = 1.96 in³	Sx = 81.70 cm³
		Area: 0.40 in²	12	3.7	75	112	0.0238	0.406	Ix = 1.11 in⁴	Ix = 18.10 cm⁴
RWI05A	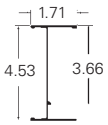	NEMA: 12B	6	1.8	224	333	0.0008	0.014	Area = 1.08 in²	Area = 6.95 cm²
		UL Cross-Sectional	10	3.0	119	178	0.0064	0.109	Sx = 3.53 in³	Sx = 147.00 cm³
		Area: 0.60 in²	12	3.7	83	123	0.0132	0.225	Ix = 1.55 in⁴	Ix = 25.40 cm⁴
RWI06A	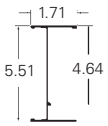	NEMA: 12B	6	1.8	224	333	0.0005	0.009	Area = 1.18 in²	Area = 7.59 cm²
		UL Cross-Sectional	10	3.0	118	175	0.0041	0.070	Sx = 5.51 in³	Sx = 230.00 cm³
		Area: 0.60 in²	12	3.7	82	121	0.0085	0.144	Ix = 1.98 in⁴	Ix = 32.50 cm⁴
RWI07A	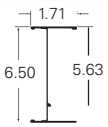	NEMA: 12C	6	1.8	224	333	0.0003	0.006	Area = 1.50 in²	Area = 9.68 cm²
		UL Cross-Sectional	10	3.0	176	262	0.0026	0.044	Sx = 8.79 in³	Sx = 366.00 cm³
		Area: 0.60 in²	12	3.7	122	182	0.0053	0.091	Ix = 2.69 in⁴	Ix = 44.10 cm⁴

Accessories

Standard Splice Plates

- Furnished in pairs with 1/4" hardware.
- UL Classified.
- One pair including hardware provided with each straight section.

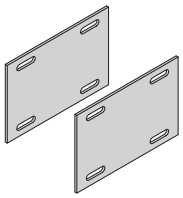

Ladder Series	Catalog No.
RWI04A	**R4A-SSP**
RWI05A	**R5A-SSP**
RWI06A	**R6A-SSP**
RWI07A	**R7A-SSP**

Offset Reducing Splice Plates

- Furnished in pairs with 1/4" hardware.
- UL Classified.

Specify the following:

† C = center reducer S = side reducer

r (ladder reduction) 3", 6", 9", 12", 15", 18", 21", 24", 27" or 30"

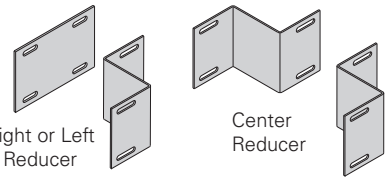

Ladder Series	Catalog No.
RWI04A	**R4A-RSP-†r**
RWI05A	**R5A-RSP-†r**
RWI06A	**R6A-RSP-†r**
RWI07A	**R7A-RSP -†r**

Flex-Mount Adjustable Splice Plates

- Furnished in pairs with 1/4" hardware.
- Horizontally adjustable to 90°.
- Vertically adjustable to 15°.
- UL Classified.

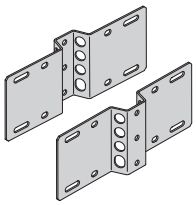

Ladder Series	Catalog No.
RWI04A	**R4A-FSP**
RWI05A	**R5A-FSP**
RWI06A	**R6A-FSP**
RWI07A	**R7A-FSP**

Requires supports within 24" on both sides, per NEMA VE 2.

Step Down Splice Plates

- Furnished in pairs with 1/4" hardware.
- UL Classified.

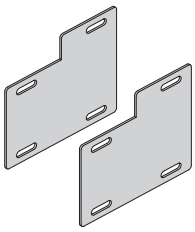

Ladder Series	Catalog No.
RWI05A to RWI04A	**RAA-DSP-45**
RWI06A to RWI04A	**RAA-DSP-46**
RWI07A to RWI04A	**RAA-DSP-47**
RWI06A to RWI05A	**RAA-DSP-56**
RWI07A to RWI05A	**RAA-DSP-57**
RWI07A to RWI06A	**RAA-DSP-67**

Tray To Box Splice Plates

- Furnished in pairs with 1/4" hardware.
- UL Classified.

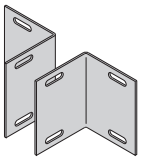

Ladder Series	Catalog No.
RWI04A	**R4A-TTB**
RWI05A	**R5A-TTB**
RWI06A	**R6A-TTB**
RWI07A	**R7A-TTB**

Vertical Adjustable Splice Plates

- Furnished in pairs with 1/4" hardware.
- UL Classified.

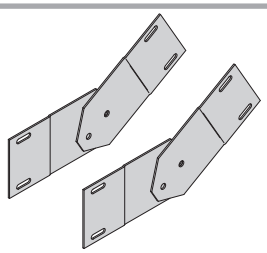

Ladder Series	Catalog No.
RWI04A	**R4A-VSP**
RWI05A	**R5A-VSP**
RWI06A	**R6A-VSP**
RWI07A	**R7A-VSP**

Requires supports within 24" on both sides, per NEMA VE 2.

Expansion Splice Plates

- Furnished in pairs with 1/4" hardware.
- Bonding jumper required.

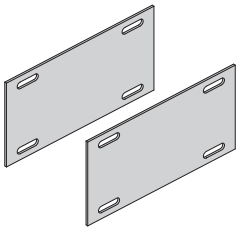

Ladder Series	Catalog No.
RWI04A	**R4A-ESP**
RWI05A	**R5A-ESP**
RWI06A	**R6A-ESP**
RWI07A	**R7A-ESP**

Accessories

Bonding Jumper

- Furnished with 1/4" hardware.
- UL Classified.

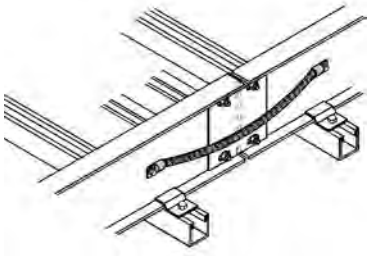

Ampacity	Catalog No.
1200	**99-30**

Clamp/Guide

- Features a no-twist design.
- Has four times the strength of the traditional design.
- Each side is labeled to ensure proper installation.
- Designed for 1/4" hardware.
- Furnished in pairs with or without hardware.

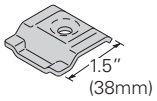

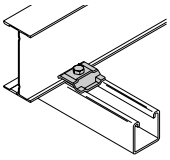

Patent No. RE35479

Catalog No.
9ZN-1204 (without hardware)
9ZN-1204NB (with hardware)

Conduit to Ladder Adaptors

- For easy attachment of conduit terminating at a cable ladder.
- Use on aluminum cable ladders.

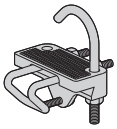

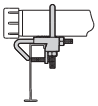

Catalog No.	Conduit Size in.	Conduit Size mm
9G-1158-1/2, 3/4	1/2, 3/4	15, 20
9G-1158-1, 1 1/4	1, 1 1/4	25, 32
9G-1158-1 1/2, 2	1 1/2, 2	40, 50
9G-1158-2 1/2, 3	2 1/2, 3	65, 80
9G-1158-3 1/2, 4	3 1/2, 4	90, 100

Ladder Drop-Out

- Specially-designed Ladder Drop-Outs provide a rounded surface with 4" (101 mm) radius to protect cable as it exits from the cable tray, preventing damage to insulation. The drop-out will attach to any desired rung.
- (†) Insert tray width

Catalog No.
9A-1103-†

† = ladder width

Blind End

- Furnished as one plate with 1/4" hardware.

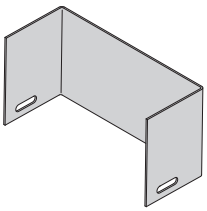

Ladder Series	Catalog No.
RWI04A	**R4A-END-†**
RWI05A	**R5A-END-†**
RWI06A	**R6A-END-†**
RWI07A	**R7A-END-†**

† = ladder width

Frame Type Box Connector

- Furnished with 1/4" hardware for tray connection.

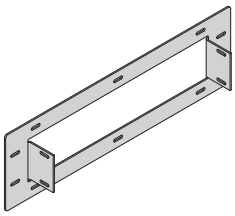

Ladder Series	Catalog No.
RWI04A	**R4A-FTB-†**
RWI05A	**R5A-FTB-†**
RWI06A	**R6A-FTB-†**
RWI07A	**R7A-FTB-†**

† = ladder width

Accessories

Trapeze Support Kit

- Single Trapeze Support in one package is available in pre-galvanized steel with zinc-plated hardware or hot dip galvanized steel with 316 stainless steel hardware.
- SH Channel provides pre-punched slots eliminating field drilling.
- Hardware is sealed in plastic bag and boxed with channel that is pre-cut to appropriate length.
- Designed for use with 1/2" threaded rod. Order rod separately.

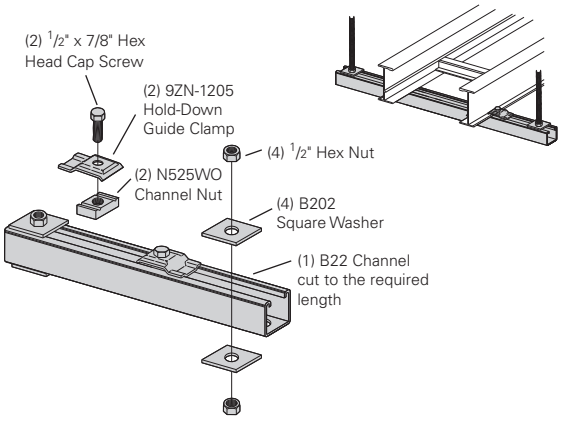

Catalog No.	Ladder Width in.	Ladder Width mm	Channel Length in.	Channel Length mm	Uniform Load lbs	Uniform Load kN
9P-5506-22SH(†)	6	152	16	406	1600	7.11
9P-5509-22SH(†)	9	229	18	457	1250	5.56
9P-5512-22SH(†)	12	305	22	559	1125	5.00
9P-5518-22SH(†)	18	457	28	711	865	3.85
9P-5524-22SH(†)	24	610	34	864	700	3.11
9P-5530-22SH(†)	30	762	40	1016	590	2.62
9P-5536-22SH(†)	36	914	46	1168	510	2.27
9P-5542-22SH(†)	42	1067	52	1321	450	2.00

- (†) Insert 3/8 for 3/8" threaded rod hardware.

Safety factor of 3.0 on all loads.

Straight Section Barrier Strip

- Furnished with four (4) barrier strip clips, mounting hardware and splice.
- Standard lengths are 144" (12 ft) & 120" (10 ft).

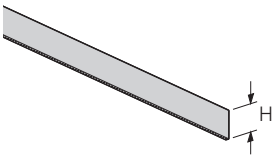

Ladder Series	Catalog No.	H in	H mm
RWI04A	**R4A-DSL-Length**	3	76
RWI05A	**R5A-DSL-Length**	4	101
RWI06A	**R6A-DSL-Length**	5	127
RWI07A	**R7A-DSL-Length**	6	152

Horizontal Bend Barrier Strip

- Horizontal Bend Barriers are flexible in order to conform to any horizontal fitting radius.
- Furnished with three (3) barrier strip clips, mounting hardware and splice.
- Standard length is 72" (6 ft).

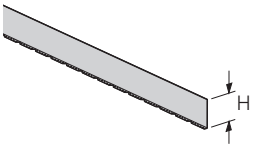

Ladder Series	Catalog No.	H in	H mm
RWI04A	**R4A-DHB**	3	76
RWI05A	**R5A-DHB**	4	101
RWI06A	**R6A-DHB**	5	127
RWI07A	**R7A-DHB**	6	152

Vertical Bend Barrier Strip

- Furnished with three (3) barrier strip clips, mounting hardware and splice.

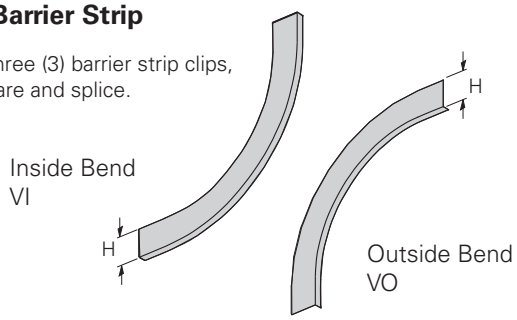

Ladder Series	Catalog No. Inside Bend	Catalog No. Outside Bend	H in	H mm
RWI04A	**R4A-DVI-(**)R(†)**	**R4A-DVO-(**)R(†)**	3	76
RWI05A	**R5A-DVI-(**)R(†)**	**R6A-DVO-(**)R(†)**	4	101
RWI06A	**R6A-DVI-(**)R(†)**	**R6A-DVO-(**)R(†)**	5	127
RWI07A	**R7A-DVI-(**)R(†)**	**R7A-DVO-(**)R(†)**	6	152

Inside Bend
(**) Insert 30°, 45°, 60°, or 90° for angles
(†) Insert 12, 24, or 36 for radius

Aluminum

Straight Section Covers & Accessories

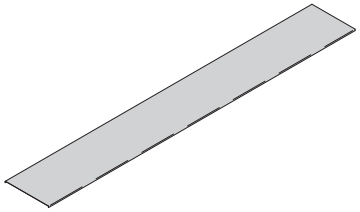

NEMA 12B Aluminum Cover Part Numbering

Prefix | Suffix

Example: **86 7 A 40 SL - 12 - 72**

Cover Type	Detail	Material	Material Thickness	Cover Style	Ladder Width	Length
86 = Solid **87** = Vented	**7** = Flanged	Aluminum	**40** = .040″	**SL** = Straight Ladder Section	**06** = 6″ **09** = 9″ **12** = 12″ **18** = 18″ **24** = 24″ **30** = 30″ **36** = 36″	**60** = 60" (1.5m) **72** = 72" (1.83m) **120** = 120" (3.0m) **144** = 144" (3.66m)

Standard Cover Clamp

- Setscrew included.
- For indoor service only.
- Sold each.

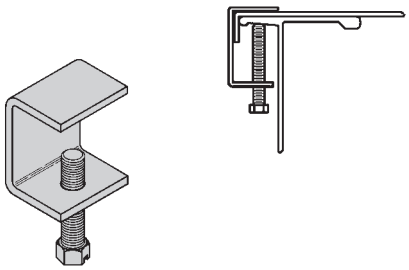

Ladder Type	Side Rail Height	Catalog No.
Aluminium	All Sizes	**9ZN-9012**
		9A-9012

Heavy Duty Cover Clamp

- For heavy duty application.
- Sold per piece.

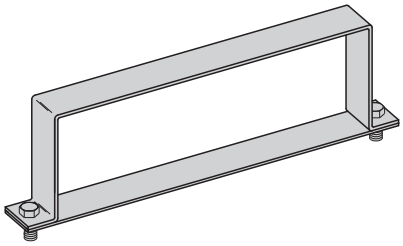

Ladder Series	Catalog No.
RWI04A	**R4A-HDCC-†**
RWI05A	**R5A-HDCC-†**
RWI06A	**R6A-HDCC-†**
RWI07A	**R7A-HDCC-†**

† = tray width

Fitting Covers

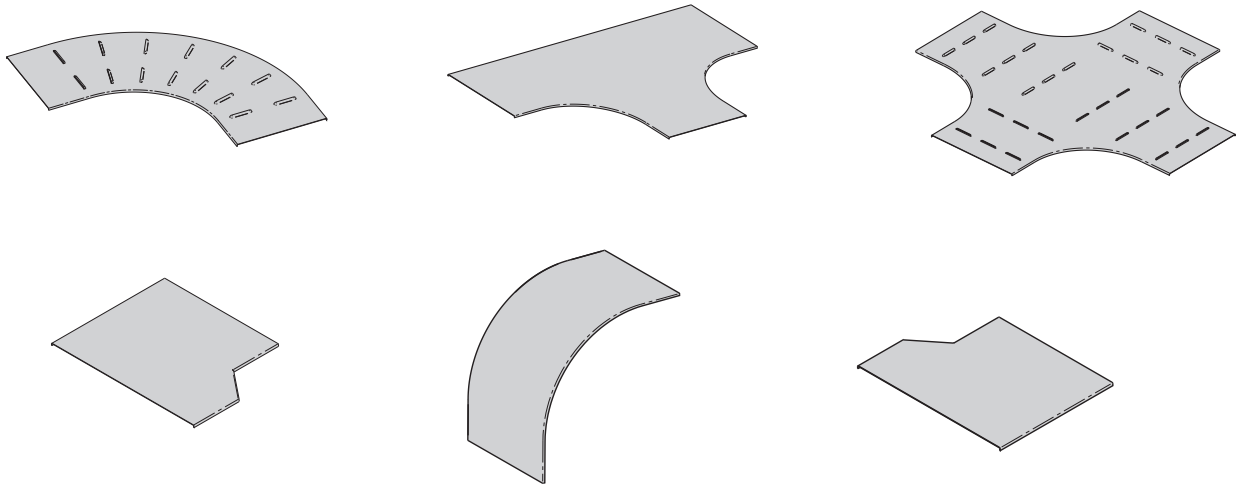

NEMA 12B Aluminum Fitting Cover Part Numbering

Prefix — Suffix

Example: **86 7 A 40 - 06 - 90 HB 12**

Cover Type
86 = Solid
87 = Vented

Detail
7 = Flange

Material
A = Aluminum

Material Thickness
40 = .040 Aluminum

HB **Insert HB Suffix from pages AL-11 & AL-12**
HT **Insert HT Suffix from page AL-13**
HX **Insert HX Suffix from page AL-13**
RT **Insert RT Suffix from page AL-14**
ET **Insert ET Suffix from page AL-15**
RX **Insert RX Suffix from page AL-16**
VI **Insert VI Suffix from pages AL-17 – AL-20**
VO **Insert VO Suffix from pages AL-17 – AL-20 & Side Rail Height**
VTD **Insert VTD Suffix from page AL-21 & Side Rail Height**
VTU **Insert VTU Suffix from page AL-21**

Specifications - NEMA 12B Aluminium Cable Ladder

Part 1 - General

1.01 Section Includes

A. The work covered under this section consists of the furnishing of all necessary labor, supervision, materials, equipment, tests and services to install complete cable ladder systems as shown on the drawings.

B. Cable ladder systems are defined to include, but are not limited to straight sections of [ladder type] cable ladders, bends, tees, elbows, drop-outs, supports and accessories.

1.02 References

A. ANSI/NFPA 70 - National Electrical Code

B. NEMA VE 1-2009 - Metallic Cable Ladder Systems

C. NEMA VE 2-2006 - Cable Ladder installation Guidelines

1.03 Drawings

A. The drawings, which constitute a part of these specifications, indicate the general route of the cable ladder systems. Data presented on these drawings are as accurate as preliminary surveys and planning can determine until final equipment selection is made. Accuracy is not guaranteed and field verification of all dimensions, routing, etc., is directed.

B. Specifications and drawings are for assistance and guidance, but exact routing, locations, distances and levels will be governed by actual field conditions. Contractor is directed to make field surveys as part of his work prior to submitting system layout drawings.

1.04 Submittals

A. Submittal Drawings: Submit drawings of cable ladder and accessories including clamps, brackets, hanger rods, splice plate connectors, expansion joint assemblies, and fittings, showing accurately scaled components.

B. Product Data: Submit manufacturer's data on cable ladder including, but not limited to, types, materials, finishes, rung spacings, inside depths and fitting radii. For side rails and rungs, submit cross sectional properties including Section Modulus (Sx) and Moment of Inertia (Ix).

1.05 Quality Assurance

A. Manufacturers: Firms regularly engaged in manufacture of cable ladders and fittings of types and capacities required, whose products have been in satisfactory use in similar service for not less than 5 years.

B. NEMA Compliance: Comply with NEMA Standards Publication Number VE 1, "Cable Ladder Systems".

C. NEC Compliance: Comply with NEC, as applicable to construction and installation of cable ladder (Article 392, NEC).

D. UL Compliance: Provide products that are UL-classified and labeled.

E. NFPA Compliance: Comply with NFPA 70B, "Recommended Practice for Electrical Equipment Maintenance" pertaining to installation of cable ladder systems.

1.06 Delivery, Storage and Handling

A. Deliver cable ladder systems and components carefully to avoid breakage, denting and scoring finishes. Do not install damaged equipment.

B. Store cable ladders and accessories in original cartons and in clean dry space; protect from weather and construction traffic. Wet materials should be unpacked and dried before storage.

Part 2 - Products

2.01 Acceptable Manufacturers

A. Subject to compliance with these specifications, cable ladder systems shall be as manufactured by Eaton's B-Line Business.

2.02 Cable Ladder Sections and Components

A. General: Except as otherwise indicated, provide metal cable ladders, of types, classes, and sizes indicated; with splice plates, bolts, nuts and washers or connecting units. Construct units with rounded edges and smooth surfaces; in compliance with applicable standards; and with the following additional construction features. Cable ladder shall be installed according to the latest revision of NEMA VE-2.

B. Material and Finish: Straight sections, fitting side rails, rungs and splice plates shall be extruded from Aluminium Association Alloy 6063. All fabricated parts shall be made from Aluminium Association Alloy 5052.

2.03 Type of Ladder System

A. Ladder Cable ladders shall consist of two longitudinal members (side rails) with transverse members (rungs) mechanically fastened to the side rails. Rungs shall be spaced [6] [9] [12] inches on center. Rung spacing in radiused fittings shall be industry standard 9" and measured at the center of the ladder's width. Each rung must be capable of supporting 1 200 lb. concentrated load at the center of a 18" wide cable ladder with a safety factor of 1.5.

B. Cable Ladder loading depth shall be [3] [4] [5] [6] inches per NEMA VE-1.

C. Straight sections shall be supplied in standard [10 foot (3.05m)] [12 foot (3.65m)] lengths.

D. Cable Ladder widths shall be [6] [9] [12] [18] [24] [30] [36] inches or as shown on drawings.

E. Splice plates shall have (4) four nuts and bolts per plate. The resistance of fixed splice connections between adjacent sections of ladder shall not exceed 0.00033 ohms. Splice plates shall be furnished with straight sections and fittings.

F. All fittings must have a minimum radius of [12] [24] [36] inches.

2.04 Loading Capacities

A. Cable ladders shall meet NEMA class designation: [75 lbs./ft. on 12 ft. span].
OR

A. Cable ladder shall be capable of carrying a uniformly distributed load of _____ lbs./ft on a _____ foot support span with a safety factor of 1.5 when supported as a simple span and tested per NEMA VE 1 Section 5.2.

Part 3 - Execution

3.01 Installation

A. Install cable ladders as indicated: Installation shall be in accordance with equipment manufacturer's instructions, and with recognized industry practices to ensure that cable ladder equipment comply with requirements of NEC and applicable portions of NFPA 70B. Reference NEMA VE-2 for general cable ladder installation guidelines.

B. Coordinate cable ladder with other electrical work as necessary to properly integrate installation of cable ladder work with other work.

C. Provide sufficient space encompassing cable ladders to permit access for installing and maintaining cables.

D. Cable ladder fitting supports shall be located such that they meet the strength requirements of straight sections. Install fitting supports per NEMA VE-2 guidelines, or in accordance with manufacturer's instructions.

3.02 Testing

A. Test cable ladders to ensure electrical continuity of bonding and grounding connections, and to demonstrate compliance with specified maximum grounding resistance. See NFPA 70B, Chapter 18, for testing and test methods.

B. Manufacturer shall provide test reports witnessed by an independent testing laboratory of the "worst case" loading conditions outlined in this specification and performed in accordance with the latest revision of NEMA VE-1-2002/CSA C22.2 No. 126.1-02.

End Of Section.

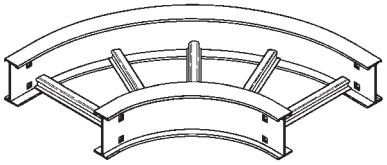

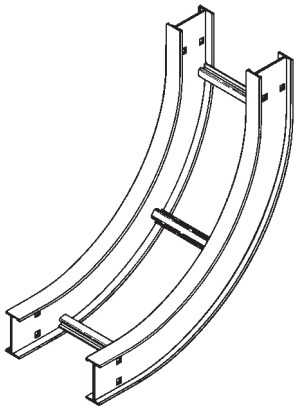

Fittings engineered with 3" tangents for splicing integrity.

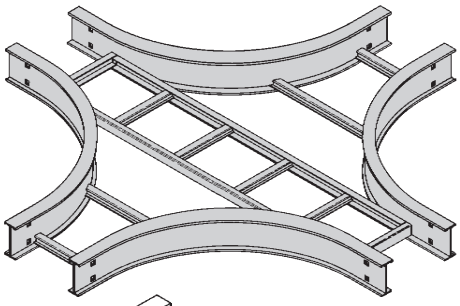

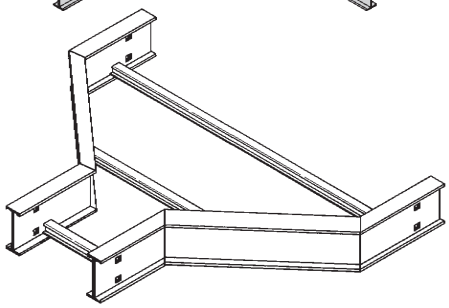

Fittings Part Numbering

Prefix — Suffix

Example: **RWI 04 A09 HB - 09 - 30 R24**

Series	Height	Material	Type	Width	Angle	Radius
RWI	**4** = 4" (101) **5** = 5" (127) **6** = 6" (152) **7** = 7" (178)	Aluminum 9" Rung Spacing	**HB** = Horizontal Bend * **HT** = Horizontal Tee * **HX** = Horizontal Cross **VI** = Vertical Inside Bend **VO** = Vertical Outside Bend * **VTD** = Vertical Tee, Down * **VTU** = Vertical Tee, Up	**06** = 6" (152) **09** = 9" (228) **12** = 12" (305) **18** = 18" (457) **24** = 24" (609) **30** = 30" (762) **36** = 36" (914)	**30** = 30° **45** = 45° **60** = 60° **90** = 90°	**R12** = 12" (305) **R24** = 24" (609) **R36** = 36" (914)

* Angle not required in part number

Horizontal Reducing / Expanding Tee or Cross Fittings Part Numbering

Prefix — Suffix

Example: **RWI 04 A09 ET - 09 - 30 R12**

Series	Height	Material	Type	Width[1]	Width[2]	Radius
RWI	**4** = 4" (101) **5** = 5" (127) **6** = 6" (152) **7** = 7" (178)	Aluminum 9" Rung Spacing	**ET** = Expanding Tee **RT** = Reducing Tee **RX** = Expanding/Reducing Cross	**06** = 6" (152) **09** = 9" (228) **12** = 12" (305) **18** = 18" (457) **24** = 24" (609) **30** = 30" (762) **36** = 36" (914)	**06** = 6" (152) **09** = 9" (228) **12** = 12" (305) **18** = 18" (457) **24** = 24" (609) **30** = 30" (762) **36** = 36" (914)	**R12** = 12" (305) **R24** = 24" (609) **R36** = 36" (914)

Horizontal Bend 90° 60° (HB)

1 pair splice plates with hardware included.

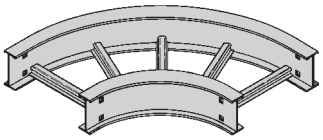

90˚ Horizontal Bend

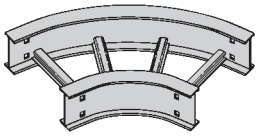

60˚ Horizontal Bend

Bottoms manufactured:

09 = 9" Rung Spacing

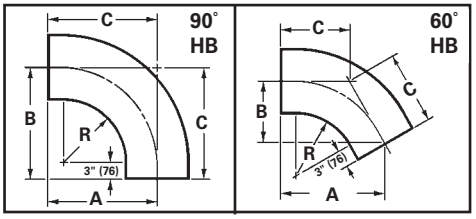

Bend Radius R		Ladder Width		90˚ Horizontal Bend Dimensions							60˚ Horizontal Bend Dimensions						
				Catalog No.	A		B		C		Catalog No.	A		B		C	
in.	mm	in.	mm		in.	mm	in.	mm	in.	mm		in.	mm	in.	mm	in.	mm
		6	152	**(Pre)HB-06-90R12**	18 1/16	459	18 1/16	459	18 1/16	459	**(Pre)HB-06-60R12**	17 9/16	445	10 1/8	258	11 11/16	297
		9	228	**(Pre)HB-09-90R12**	19 9/16	497	19 9/16	497	19 9/16	497	**(Pre)HB-09-60R12**	18 13/16	478	10 7/8	277	12 9/16	319
		12	305	**(Pre)HB-12-90R12**	21 1/16	535	21 1/16	535	21 1/16	535	**(Pre)HB-12-60R12**	20 1/8	511	11 5/8	296	13 7/16	341
12	305	18	457	**(Pre)HB-18-90R12**	24 1/16	611	24 1/16	611	24 1/16	611	**(Pre)HB-18-60R12**	22 3/4	577	13 1/8	334	15 3/16	385
		24	609	**(Pre)HB-24-90R12**	27 1/16	687	27 1/16	687	27 1/16	687	**(Pre)HB-24-60R12**	25 5/16	643	14 5/8	372	16 7/8	429
		30	762	**(Pre)HB-30-90R12**	30 1/16	763	30 1/16	763	30 1/16	763	**(Pre)HB-30-60R12**	27 15/16	709	16 1/8	410	18 5/8	473
		36	914	**(Pre)HB-36-90R12**	33 1/16	840	33 1/16	840	33 1/16	840	**(Pre)HB-36-60R12**	30 1/2	775	17 5/8	448	20 3/8	517
		6	152	**(Pre)HB-06-90R24**	30 1/16	763	30 1/16	763	30 1/16	763	**(Pre)HB-06-60R24**	27 15/16	709	16 1/8	410	18 5/8	473
		9	228	**(Pre)HB-09-90R24**	31 9/16	802	31 9/16	802	31 9/16	802	**(Pre)HB-09-60R24**	29 1/4	742	16 7/8	429	19 1/2	495
		12	305	**(Pre)HB-12-90R24**	33 1/16	840	33 1/16	840	33 1/16	840	**(Pre)HB-12-60R24**	30 1/2	775	17 5/8	448	20 3/8	517
24	610	18	457	**(Pre)HB-18-90R24**	36 1/16	916	36 1/16	916	36 1/16	916	**(Pre)HB-18-60R24**	33 1/8	841	19 1/8	486	22 1/8	561
		24	609	**(Pre)HB-24-90R24**	39 1/16	992	39 1/16	992	39 1/16	992	**(Pre)HB-24-60R24**	35 3/4	907	20 5/8	524	23 13/16	605
		30	762	**(Pre)HB-30-90R24**	42 1/16	1068	42 1/16	1068	42 1/16	1068	**(Pre)HB-30-60R24**	38 5/16	973	22 1/8	564	25 9/16	649
		36	914	**(Pre)HB-36-90R24**	45 1/16	1144	45 1/16	1144	45 1/16	1144	**(Pre)HB-36-60R24**	40 15/16	1039	23 5/8	600	27 15/16	693
		6	152	**(Pre)HB-06-90R36**	42 1/16	1068	42 1/16	1068	42 1/16	1068	**(Pre)HB-06-60R36**	38 3/8	975	22 1/8	562	25 9/16	649
		9	228	**(Pre)HB-09-90R36**	43 9/16	1107	43 9/16	1107	43 9/16	1107	**(Pre)HB-09-60R36**	39 5/8	1006	22 7/8	581	26 7/16	672
		12	305	**(Pre)HB-12-90R36**	45 1/16	1145	45 1/16	1145	45 1/16	1145	**(Pre)HB-12-60R36**	41	1041	23 5/8	600	27 5/16	694
36	915	18	457	**(Pre)HB-18-90R36**	48 1/16	1221	48 1/16	1221	48 1/16	1221	**(Pre)HB-18-60R36**	43 1/2	1105	25 1/16	637	29	737
		24	609	**(Pre)HB-24-90R36**	51 1/16	1297	51 1/16	1297	51 1/16	1297	**(Pre)HB-24-60R36**	46 1/8	1172	26 5/8	676	30 3/4	781
		30	762	**(Pre)HB-30-90R36**	54 1/16	1373	54 1/16	1373	54 1/16	1373	**(Pre)HB-30-60R36**	48 3/4	1238	28 1/16	713	32 1/2	826
		36	914	**(Pre)HB-36-90R36**	57 1/16	1449	57 1/16	1449	57 1/16	1449	**(Pre)HB-36-60R36**	51 5/16	13023	29 9/16	751	34 1/4	870

(Pre) See page AL-10 for catalog number prefix.
Width dimensions are to inside wall.
Manufacturing tolerances apply to all dimensions.

Horizontal Bend 45° 30° (HB)

1 pair splice plates with hardware included.

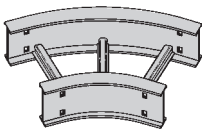

45˚ Horizontal Bend

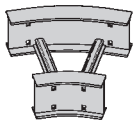

30˚ Horizontal Bend

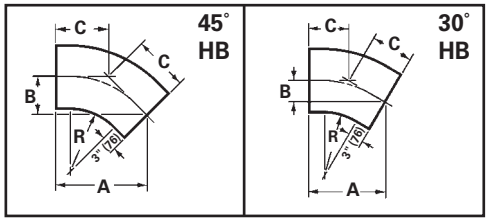

Bottoms manufactured:

09 = 9" Rung Spacing

Bend Radius R		Ladder Width		60˚ Horizontal Bend Dimensions								30˚ Horizontal Bend Dimensions							
				Catalog No.	A		B		C			Catalog No.	A		B		C		
in.	mm	in.	mm		in.	mm	in.	mm	in.	mm			in.	mm	in.	mm	in.	mm	
		6	152	(Pre)HB-06-45R12	15 3/4	400	6 1/2	165	9 3/16	233		(Pre)HB-06-30R12	13 3/16	338	3 9/16	90	7 1/16	180	
		9	228	(Pre)HB-09-4R12	16 13/16	427	6 15/16	176	9 13/16	249		(Pre)HB-09-30R12	13 15/16	354	3 3/4	95	7 7/2	190	
		12	305	(Pre)HB-12-45R12	17 7/8	454	7 7/16	189	10 1/2	267		(Pre)HB-12-30R12	14 11/16	373	3 15/16	100	7 7/8	200	
12	305	18	457	(Pre)HB-18-45R12	20 1/2	521	8 5/16	211	11 3/4	298		(Pre)HB-18-30R12	16 3/16	411	4 9/16	110	8 11/16	220	
		24	609	(Pre)HB-24-45R12	22 1/16	560	9 3/16	233	12 15/16	328		(Pre)HB-24-30R12	17 11/16	449	4 3/4	120	9 1/2	241	
		30	762	(Pre)HB-30-45R12	24 5/16	617	10 1/16	255	14 1/4	362		(Pre)HB-30-30R12	19 3/16	487	5 1/8	131	10 5/16	261	
		36	914	(Pre)HB-36-45R12	26 7/16	671	10 15/16	278	15 7/16	392		(Pre)HB-36-30R12	20 11/16	525	5 9/16	141	11 1/16	282	
		6	152	(Pre)HB-06-45R24	24 5/16	617	10 1/16	255	14 3/16	360		(Pre)HB-06-30R24	19 3/16	487	5 1/8	131	10 5/16	261	
		9	228	(Pre)HB-09-45R24	25 1/4	641	10 1/2	267	14 13/16	376		(Pre)HB-09-30R24	19 15/16	506	5 5/16	136	10 11/16	271	
		12	305	(Pre)HB-12-45R24	26 7/16	672	10 15/16	278	15 7/16	392		(Pre)HB-12-30R24	20 11/16	525	5 9/16	141	11 1/16	282	
24	610	18	457	(Pre)HB-18-45R24	28 9/16	725	11 13/16	300	16 11/16	424		(Pre)HB-18-30R24	22 3/16	563	5 15/16	151	11 7/8	302	
		24	609	(Pre)HB-24-45R24	30 11/16	779	12 11/16	322	17 15/16	456		(Pre)HB-24-30R24	23 11/16	601	6 3/8	161	12 11/16	322	
		30	762	(Pre)HB-30-45R24	32 13/16	833	13 9/16	345	19 3/16	487		(Pre)HB-30-30R24	25 3/16	640	6 3/4	171	13 1/2	343	
		36	914	(Pre)HB-36-45R24	34 15/16	887	14 7/16	367	20 7/16	519		(Pre)HB-36-30R24	26 11/16	678	7 1/8	182	14 5/16	363	
		6	152	(Pre)HB-06-45R36	32 3/4	832	13 9/16	345	19 1/4	489		(Pre)HB-06-30R36	25 3/16	640	6 3/4	171	13 1/2	343	
		9	228	(Pre)HB-09-45R36	33 13/16	859	14	356	19 13/16	503		(Pre)HB-09-30R36	25 15/16	659	7	179	13 15/16	354	
		12	305	(Pre)HB-12-45R36	34 15/16	887	14 1/2	368	20 7/16	519		(Pre)HB-12-30R36	26 11/16	678	7 1/8	181	14 5/16	364	
36	915	18	457	(Pre)HB-18-45R36	37	940	15 1/4	387	21 11/16	551		(Pre)HB-18-30R36	28 3/16	716	7 1/2	191	15 1/8	384	
		24	609	(Pre)HB-24-45R36	39 1/8	994	16 1/4	413	22 15/16	583		(Pre)HB-24-30R36	29 11/16	754	8	203	15 15/16	405	
		30	762	(Pre)HB-30-45R36	41 1/4	1048	17	432	24 3/16	614		(Pre)HB-30-30R36	31 3/16	792	8 5/16	211	16 3/4	425	
		36	914	(Pre)HB-36-45R36	43 3/8	1102	17 15/16	456	25 7/16	646		(Pre)HB-36-30R36	32 11/16	830	8 3/4	222	17 1/2	445	

(Pre) See page AL-10 for catalog number prefix.
Width dimensions are to inside wall.
Manufacturing tolerances apply to all dimensions.

NEMA 12B Aluminum Cable Ladder - Fittings

Horizontal Tee (HT)

2 pair splice plates with hardware included.

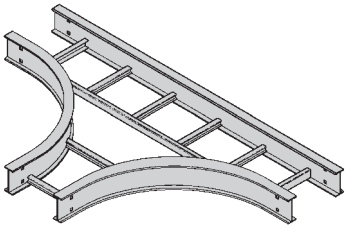

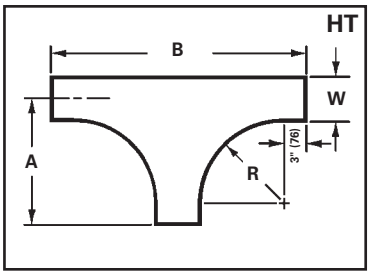

Horizontal Cross (HX)

3 pair splice plates with hardware included.

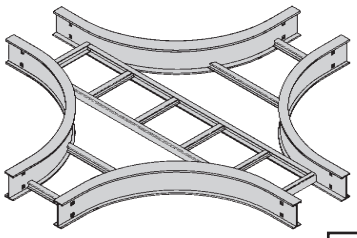

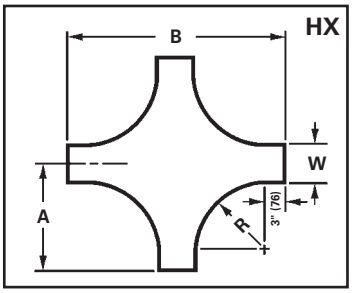

Bend Radius R in.	Bend Radius R mm	Ladder Width in.	Ladder Width mm	Horizontal Tee Catalog Number	Horizontal Tee Dimensions A in.	Horizontal Tee Dimensions A mm	Horizontal Tee Dimensions B in.	Horizontal Tee Dimensions B mm	Horizontal Cross Catalog Number	Horizontal Cross Dimensions A in.	Horizontal Cross Dimensions A mm	Horizontal Cross Dimensions B in.	Horizontal Cross Dimensions B mm
12	305	6	152	**(Prefix)HT-06-R12**	18 1/16	458	36 3/4	933	**(Prefix)HX-06-R12**	18 1/16	458	36 3/4	933
		9	229	**(Prefix)HT-09-R12**	19 9/16	497	39 7/8	1013	**(Prefix)HX-09-R12**	19 9/16	497	39 7/8	1013
		12	305	**(Prefix)HT-12-R12**	21 1/16	535	42 1/4	1073	**(Prefix)HX-12-R12**	21 1/16	535	42 1/4	1073
		18	457	**(Prefix)HT-18-R12**	24 1/16	611	48 1/2	1232	**(Prefix)HX-18-R12**	24 1/16	611	48 1/2	1232
		24	609	**(Prefix)HT-24-R12**	27 1/16	687	54 13/16	1392	**(Prefix)HX-24-R12**	27 1/16	687	54 13/16	1392
		30	762	**(Prefix)HT-30-R12**	30 1/16	763	60 1/4	1530	**(Prefix)HX-30-R12**	30 1/16	763	60 1/4	1530
		36	914	**(Prefix)HT-36-R12**	33 1/16	839	66 9/16	1691	**(Prefix)HX-36-R12**	33 1/16	839	66 9/16	1691
24	610	6	152	**(Prefix)HT-06-R24**	30 1/16	763	60 1/16	1551	**(Prefix)HX-06-R24**	30 1/16	763	60 1/16	1551
		9	229	**(Prefix)HT-09-R24**	31 9/16	801	63 1/4	1606	**(Prefix)HX-09-R24**	31 9/16	801	63 1/4	1606
		12	305	**(Prefix)HT-12-R24**	33 1/16	839	66 9/16	1691	**(Prefix)HX-12-R24**	33 1/16	839	66 9/16	1691
		18	457	**(Prefix)HT-18-R24**	36 1/16	916	72 1/16	1830	**(Prefix)HX-18-R24**	36 1/16	916	72 1/16	1830
		24	609	**(Prefix)HT-24-R24**	39 1/16	992	78 3/8	1991	**(Prefix)HX-24-R24**	39 1/16	992	78 3/8	1991
		30	762	**(Prefix)HT-30-R24**	42 1/16	1068	84 5/8	2150	**(Prefix)HX-30-R24**	42 1/16	1068	84 5/8	2150
		36	914	**(Prefix)HT-36-R24**	45 1/16	1144	90 15/16	2310	**(Prefix)HX-36-R24**	45 1/16	1144	90 15/16	2310
36	915	6	152	**(Prefix)HT-06-R36**	42 1/16	1068	84 1/16	2135	**(Prefix)HX-06-R36**	42 1/16	1068	84 1/16	2135
		9	229	**(Prefix)HT-09-R36**	43 9/16	1106	87 1/4	2216	**(Prefix)HX-09-R36**	43 9/16	1106	87 1/4	2216
		12	305	**(Prefix)HT-12-R36**	45 1/16	1144	90 9/16	2301	**(Prefix)HX-12-R36**	45 1/16	1144	90 9/16	2301
		18	457	**(Prefix)HT-28-R36**	48 1/16	1221	96 1/16	2440	**(Prefix)HX-18-R36**	48 1/16	1221	96 1/16	2440
		24	609	**(Prefix)HT-24-R36**	51 1/16	1297	102 3/8	2601	**(Prefix)HX-24-R36**	51 1/16	1297	102 3/8	2601
		30	762	**(Prefix)HT-30-R36**	54 1/16	1373	108 5/8	2760	**(Prefix)HX-30-R36**	54 1/16	1373	108 5/8	2760
		36	914	**(Prefix)HT-36-R36**	57 1/16	1449	114 15/16	2920	**(Prefix)HX-36-R36**	57 1/16	1449	114 15/16	2920

(Pre) See page AL-10 for catalog number prefix.
Width dimensions are to inside wall.
Manufacturing tolerances apply to all dimensions.

Vertical Bend 90˚ (VO, VI)

1 pair splice plates with hardware included.

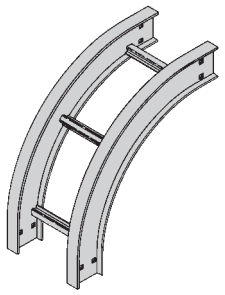

90˚ Vertical Outside

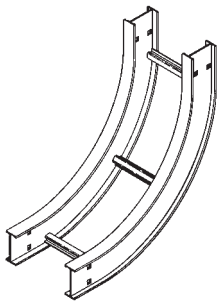

90˚ Vertical Inside

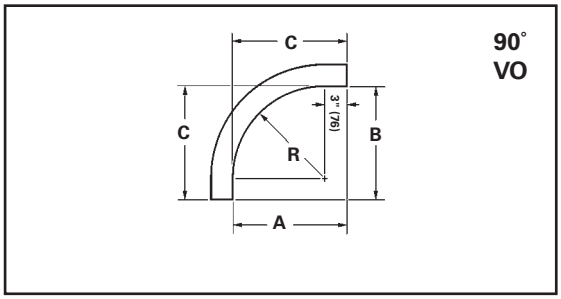

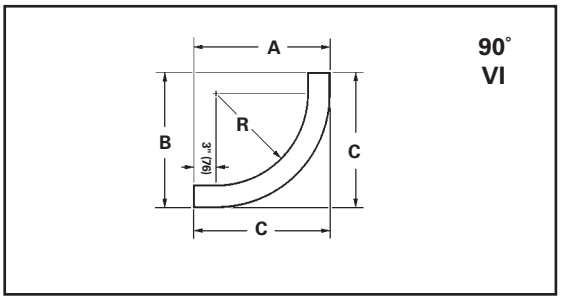

Bend Radius R	Ladder Width		(*) Insert "VO" for Vert. Outside Bend Insert "VI" for Vert. Inside Bend	VO Side Rail Height 4" - 7"			VI Side Rail Height											
							4"			5"			6"			7"		
				A	B	C	A	B	C	A	B	C	A	B	C	A	B	C
in.	in.	mm	Catalog No.	in.	in.	in.	in.	in.	in.	in.	in.	in.	in.	in.	in.	in.	in.	in.
12 (305)	6	152	(Prefix)(*)-06-90R12	15 (381)	15 (381)	15 (381)	18 1/2 (470)	18 1/2 (470)	18 1/2 (470)	19 1/2 (495)	19 1/2 (495)	19 1/2 (495)	20 1/2 (521)	20 1/2 (521)	20 1/2 (521)	21 1/2 (546)	21 1/2 (546)	21 1/2 (546)
	9	228	(Prefix)(*)-09-90R12															
	12	305	(Prefix)(*)-12-90R12															
	18	457	(Prefix)(*)-18-90R12															
	24	609	(Prefix)(*)-24-90R12															
	30	762	(Prefix)(*)-30-90R12															
	36	914	(Prefix)(*)-36-90R12															
24 (609)	6	152	(Prefix)(*)-06-90R24	27 (686)	27 (686)	27 (686)	31 1/2 (775)	31 1/2 (775)	31 1/2 (775)	31 1/2 (800)	31 1/2 (800)	31 1/2 (800)	32 1/2 (825)	32 1/2 (825)	32 1/2 (825)	33 1/2 (851)	33 1/2 (851)	33 1/2 (851)
	9	228	(Prefix)(*)-09-90R24															
	12	305	(Prefix)(*)-12-90R24															
	18	457	(Prefix)(*)-18-90R24															
	24	609	(Prefix)(*)-24-90R24															
	30	762	(Prefix)(*)-30-90R24															
	36	914	(Prefix)(*)-36-90R24															
36 (914)	6	152	(Prefix)(*)-06-90R36	39 (991)	39 (991)	39 (991)	42 1/2 (1080)	42 1/2 (1080)	42 1/2 (1080)	43 1/2 (1105)	43 1/2 (1105)	43 1/2 (1105)	44 1/2 (1130)	44 1/2 (1130)	44 1/2 (1130)	45 1/2 (1156)	45 1/2 (1156)	45 1/2 (1156)
	9	228	(Prefix)(*)-09-90R36															
	12	305	(Prefix)(*)-12-90R36															
	18	457	(Prefix)(*)-18-90R36															
	24	609	(Prefix)(*)-24-90R36															
	30	762	(Prefix)(*)-30-90R36															
	36	914	(Prefix)(*)-36-90R36															

(Pre) See page AL-10 for catalog number prefix.
Width dimensions are to inside wall.
Manufacturing tolerances apply to all dimensions.

Vertical Bend 60˚ (VO, VI)

1 pair splice plates with hardware included.

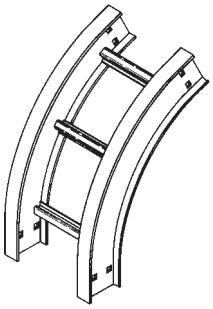

60˚ Vertical Outside

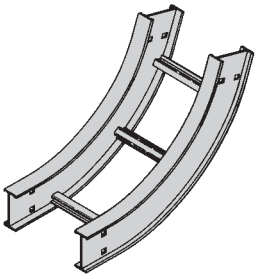

60˚ Vertical Inside

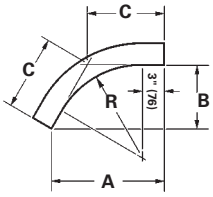

60˚ VO

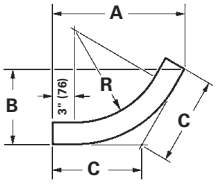

60˚ VI

Bend Radius R	Ladder Width		(*) Insert "VO" for Vert. Outside Bend Insert "VI" for Vert. Inside Bend	VO Side Rail Height 4" - 7"			VI Side Rail Height											
							4"			5"			6"			7"		
				A	B	C	A	B	C	A	B	C	A	B	C	A	B	C
in.	in.	mm	Catalog No.	in.	in.	in.	in.	in.	in.	in.	in.	in.	in.	in.	in.	in.	in.	in.
12 (305)	6	152	(Prefix)(*)-06-60R12	$14\frac{7}{8}$ (378)	$8\frac{5}{8}$ (219)	$9\frac{15}{16}$ (252)	18 (457)	$10\frac{3}{8}$ (263)	12 (305)	$18\frac{13}{16}$ (478)	$10\frac{7}{8}$ (276)	$12\frac{9}{16}$ (319)	$19\frac{11}{16}$ (500)	$11\frac{3}{8}$ (289)	$13\frac{1}{8}$ (333)	$20\frac{15}{16}$ (522)	$11\frac{7}{8}$ (301)	$13\frac{11}{16}$ (347)
	9	228	(Prefix)(*)-09-60R12															
	12	305	(Prefix)(*)-12-60R12															
	18	457	(Prefix)(*)-18-60R12															
	24	609	(Prefix)(*)-24-60R12															
	30	762	(Prefix)(*)-30-60R12															
	36	914	(Prefix)(*)-36-60R12															
24 (609)	6	152	(Prefix)(*)-06-60R24	$25\frac{9}{16}$ (643)	$14\frac{5}{8}$ (371)	$16\frac{7}{8}$ (428)	$28\frac{3}{8}$ (721)	$16\frac{3}{8}$ (415)	$18\frac{15}{16}$ (481)	$29\frac{1}{4}$ (743)	$16\frac{7}{8}$ (428)	$19\frac{1}{2}$ (495)	$30\frac{1}{16}$ (763)	$17\frac{3}{8}$ (441)	$20\frac{1}{16}$ (509)	$30\frac{15}{16}$ (786)	$17\frac{7}{8}$ (454)	$20\frac{5}{8}$ (524)
	9	228	(Prefix)(*)-09-60R24															
	12	305	(Prefix)(*)-12-60R24															
	18	457	(Prefix)(*)-18-60R24															
	24	609	(Prefix)(*)-24-60R24															
	30	762	(Prefix)(*)-30-60R24															
	36	914	(Prefix)(*)-36-60R24															
36 (914)	6	152	(Prefix)(*)-06-60R36	$35\frac{3}{4}$ (908)	$20\frac{5}{8}$ (524)	$23\frac{13}{16}$ (605)	$38\frac{3}{4}$ (984)	$22\frac{3}{8}$ (568)	$25\frac{7}{8}$ (1657)	$39\frac{5}{8}$ (1006)	$22\frac{7}{8}$ (581)	$26\frac{7}{16}$ (672)	$40\frac{1}{2}$ (1029)	$23\frac{3}{8}$ (594)	27 (686)	$41\frac{3}{8}$ (1051)	$23\frac{7}{8}$ (606)	$27\frac{9}{16}$ (700)
	9	228	(Prefix)(*)-09-60R36															
	12	305	(Prefix)(*)-12-60R36															
	18	457	(Prefix)(*)-18-60R36															
	24	609	(Prefix)(*)-24-60R36															
	30	762	(Prefix)(*)-30-60R36															
	36	914	(Prefix)(*)-36-60R36															

(Pre) See page AL-10 for catalog number prefix.
Width dimensions are to inside wall.
Manufacturing tolerances apply to all dimensions.

Vertical Bend 45˚ (VO, VI)

1 pair splice plates with hardware included.

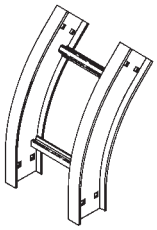

45˚ Vertical Outside

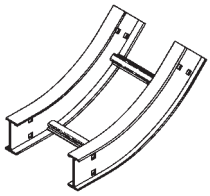

45˚ Vertical Inside

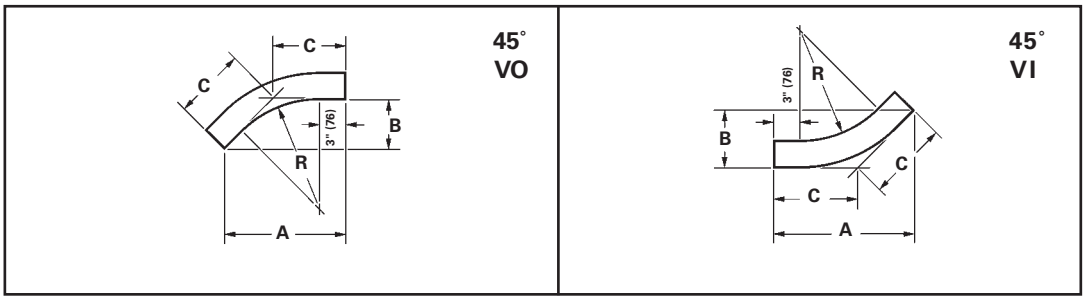

Bend Radius R	Ladder Width		(*) Insert "VO" for Vert. Outside Bend Insert "VI" for Vert. Inside Bend	VO Side Rail Height 4" - 7"			VI Side Rail Height											
							4"			5"			6"			7"		
				A	B	C	A	B	C	A	B	C	A	B	C	A	B	C
in.	in.	mm	Catalog No.	in.	in.	in.	in.	in.	in.	in.	in.	in.	in.	in.	in.	in.	in.	in.
12 (305)	6	152	**(Prefix)(*)-06-45R12**	$13\frac{5}{8}$ (346)	$5\frac{3}{8}$ (136)	8 (203)	$16\frac{1}{8}$ (409)	$6\frac{11}{16}$ (170)	$9\frac{7}{16}$ (239)	$16\frac{7}{8}$ (428)	7 (178)	$9\frac{7}{8}$ (251)	$17\frac{9}{16}$ (446)	$7\frac{1}{4}$ (184)	$10\frac{1}{4}$ (260)	$18\frac{1}{4}$ (463)	$7\frac{9}{16}$ (192)	$10\frac{11}{16}$ (271)
	9	228	**(Prefix)(*)-09-45R12**															
	12	305	**(Prefix)(*)-12-45R12**															
	18	457	**(Prefix)(*)-18-45R12**															
	24	609	**(Prefix)(*)-24-45R12**															
	30	762	**(Prefix)(*)-30-45R12**															
	36	914	**(Prefix)(*)-36-45R12**															
24 (609)	6	152	**(Prefix)(*)-06-45R24**	$22\frac{1}{8}$ (562)	$9\frac{3}{16}$ (233)	$12\frac{15}{16}$ (328)	$24\frac{5}{8}$ (625)	$10\frac{3}{16}$ (259)	$14\frac{7}{16}$ (366)	$25\frac{5}{16}$ (643)	$10\frac{1}{2}$ (267)	$14\frac{13}{16}$ (376)	26 (660)	$10\frac{3}{4}$ (273)	$15\frac{1}{4}$ (387)	$26\frac{3}{4}$ (679)	$11\frac{1}{16}$ (281)	$15\frac{5}{8}$ (397)
	9	228	**(Prefix)(*)-09-45R24**															
	12	305	**(Prefix)(*)-12-45R24**															
	18	457	**(Prefix)(*)-18-45R24**															
	24	609	**(Prefix)(*)-24-45R24**															
	30	762	**(Prefix)(*)-30-45R24**															
	36	914	**(Prefix)(*)-36-45R24**															
36 (914)	6	152	**(Prefix)(*)-06-45R36**	$30\frac{11}{16}$ (779)	$12\frac{11}{16}$ (322)	18 (457)	$33\frac{1}{8}$ (841)	$13\frac{3}{4}$ (349)	$19\frac{7}{16}$ (494)	$33\frac{13}{16}$ (859)	14 (356)	$19\frac{13}{16}$ (503)	$34\frac{9}{16}$ (878)	$14\frac{15}{16}$ (364)	$20\frac{1}{4}$ (514)	$35\frac{1}{4}$ (895)	$14\frac{5}{8}$ (371)	$20\frac{5}{8}$ (524)
	9	228	**(Prefix)(*)-09-45R36**															
	12	305	**(Prefix)(*)-12-45R36**															
	18	457	**(Prefix)(*)-18-45R36**															
	24	609	**(Prefix)(*)-24-45R36**															
	30	762	**(Prefix)(*)-30-45R36**															
	36	914	**(Prefix)(*)-36-45R36**															

(Pre) See page AL-10 for catalog number prefix.
Width dimensions are to inside wall.
Manufacturing tolerances apply to all dimensions.

Vertical Bend 30˚ (VO, VI)

1 pair splice plates with hardware included.

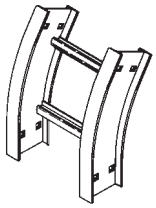

30˚ Vertical Outside

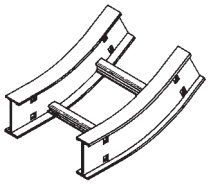

30˚ Vertical Inside

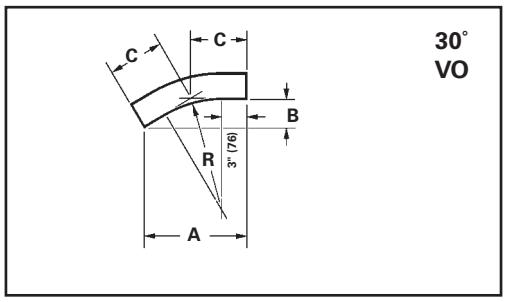

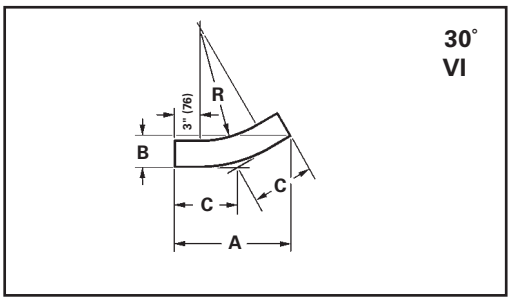

Bend Radius R	Ladder Width		(*) Insert "VO" for Vert. Outside Bend Insert "VI" for Vert. Inside Bend	VO Side Rail Height 4" - 7"			VI Side Rail Height											
							4"			5"			6"			7"		
				A	B	C	A	B	C	A	B	C	A	B	C	A	B	C
in.	in.	mm	Catalog No.	in.	in.	in.	in.	in.	in.	in.	in.	in.	in.	in.	in.	in.	in.	in.
12 (305)	6	152	**(Prefix)(*)-06-30R12**	$11\frac{5}{8}$ (295)	$3\frac{1}{8}$ (79)	$6\frac{1}{4}$ (159)	$13\frac{7}{16}$ (341)	$3\frac{5}{8}$ (92)	$7\frac{3}{16}$ (182)	$13\frac{15}{16}$ (354)	$3\frac{3}{4}$ (95)	$7\frac{7}{16}$ (189)	$14\frac{7}{16}$ (366)	$3\frac{7}{8}$ (98)	$7\frac{3}{4}$ (197)	$14\frac{7}{8}$ (378)	4 (101)	8 (203)
	9	228	**(Prefix)(*)-09-30R12**															
	12	305	**(Prefix)(*)-12-30R12**															
	18	457	**(Prefix)(*)-18-30R12**															
	24	609	**(Prefix)(*)-24-30R12**															
	30	762	**(Prefix)(*)-30-30R12**															
	36	914	**(Prefix)(*)-36-30R12**															
24 (609)	6	152	**(Prefix)(*)-06-30R24**	$17\frac{5}{8}$ (447)	$4\frac{3}{4}$ (120)	$9\frac{7}{16}$ (239)	$19\frac{7}{16}$ (493)	$5\frac{3}{16}$ (132)	$10\frac{7}{16}$ (265)	$19\frac{15}{16}$ (506)	$5\frac{5}{16}$ (135)	$10\frac{11}{16}$ (271)	$20\frac{7}{16}$ (519)	$5\frac{7}{16}$ (138)	$10\frac{15}{16}$ (278)	$20\frac{7}{8}$ (530)	$5\frac{5}{8}$ (143)	$11\frac{3}{16}$ (284)
	9	228	**(Prefix)(*)-09-30R24**															
	12	305	**(Prefix)(*)-12-30R24**															
	18	457	**(Prefix)(*)-18-30R24**															
	24	609	**(Prefix)(*)-24-30R24**															
	30	762	**(Prefix)(*)-30-30R24**															
	36	914	**(Prefix)(*)-36-30R24**															
36 (914)	6	152	**(Prefix)(*)-06-30R36**	$23\frac{11}{16}$ (602)	$6\frac{5}{16}$ (160)	$12\frac{3}{4}$ (324)	$25\frac{7}{16}$ (646)	$6\frac{13}{16}$ (173)	$13\frac{5}{8}$ (346)	$25\frac{15}{16}$ (659)	$6\frac{15}{16}$ (176)	$13\frac{7}{8}$ (352)	$26\frac{7}{16}$ (672)	$7\frac{1}{16}$ (179)	$14\frac{3}{16}$ (360)	$26\frac{15}{16}$ (684)	$7\frac{1}{4}$ (184)	$14\frac{7}{16}$ (367)
	9	228	**(Prefix)(*)-09-30R36**															
	12	305	**(Prefix)(*)-12-30R36**															
	18	457	**(Prefix)(*)-18-30R36**															
	24	609	**(Prefix)(*)-24-30R36**															
	30	762	**(Prefix)(*)-30-30R36**															
	36	914	**(Prefix)(*)-36-30R36**															

(Pre) See page AL-10 for catalog number prefix.
Width dimensions are to inside wall.
Manufacturing tolerances apply to all dimensions.

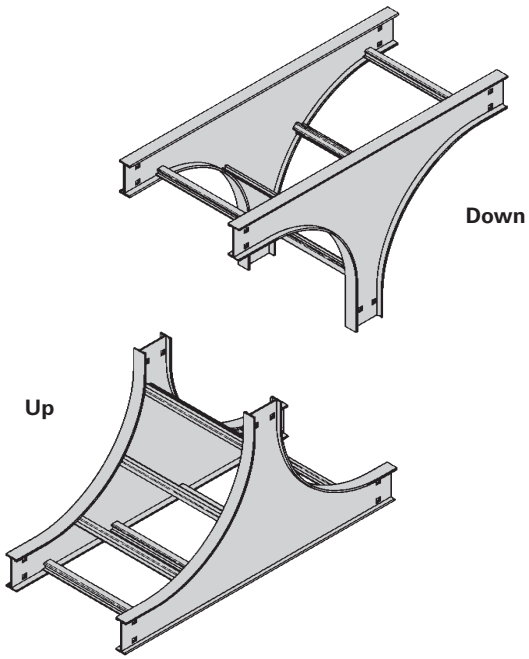

Vertical Tee Up/Down (VTU/VT)

2 pair splice plates with hardware included.

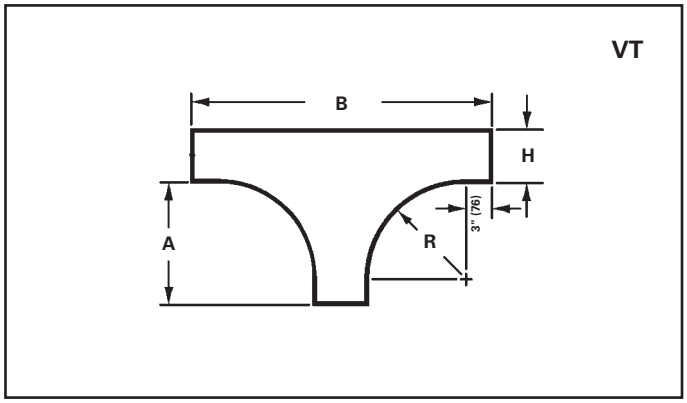

Bend Radius R in.	Ladder Width in.	Ladder Width mm	Vertical Tee Down Catalog No.	Vertical Tee Up Catalog No.	Side Rail Height "H" 4" A in.	4" B in.	5" A in.	5" B in.	6" A in.	6" B in.	7" A in.	7" B in.
12 (305)	6	152	(Prefix)VTD-06-R12	(Prefix)VTU-06-R12	15 (381)	33 7/16 (849)	15 (381)	34 3/8 (874)	15 (381)	35 3/8 (899)	15 (381)	36 3/8 (924)
	9	228	(Prefix)VTD-09-R12	(Prefix)VTU-09-R12								
	12	305	(Prefix)VTD-12-R12	(Prefix)VTU-12-R12								
	18	457	(Prefix)VTD-18-R12	(Prefix)VTU-18-R12								
	24	609	(Prefix)VTD-24-R12	(Prefix)VTU-24-R12								
	30	762	(Prefix)VTD-30-R12	(Prefix)VTU-30-R12								
	36	914	(Prefix)VTD-36-R12	(Prefix)VTU-36-R12								
24 (609)	6	152	(Prefix)VTD-06-R24	(Prefix)VTU-06-R24	27 (6867)	57 7/16 (1458)	27 (686)	58 3/8 (1483)	27 (686)	59 3/8 (1508)	27 (686)	60 3/8 (1533)
	9	228	(Prefix)VTD-09-R24	(Prefix)VTU-09-R24								
	12	305	(Prefix)VTD-12-R24	(Prefix)VTU-12-R24								
	18	457	(Prefix)VTD-18-R24	(Prefix)VTU-18-R24								
	24	609	(Prefix)VTD-24-R24	(Prefix)VTU-24-R24								
	30	762	(Prefix)VTD-30-R24	(Prefix)VTU-30-R24								
	36	914	(Prefix)VTD-36-R24	(Prefix)VTU-36-R24								
36 (914)	6	152	(Prefix)VTD-06-R36	(Prefix)VTU-06-R36	39 (991)	81 7/16 (2068)	39 (991)	82 3/8 (2093)	39 (991)	83 3/8 (2118)	39 (991)	84 3/8 (2143)
	9	228	(Prefix)VTD-09-R36	(Prefix)VTU-09-R36								
	12	305	(Prefix)VTD-12-R36	(Prefix)VTU-12-R36								
	18	457	(Prefix)VTD-18-R36	(Prefix)VTU-18-R36								
	24	609	(Prefix)VTD-24-R36	(Prefix)VTU-24-R36								
	30	762	(Prefix)VTD-30-R36	(Prefix)VTU-30-R36								
	36	914	(Prefix)VTD-36-R36	(Prefix)VTU-36-R36								

(Pre) See page AL-10 for catalog number prefix.
Width dimensions are to inside wall.
Manufacturing tolerances apply to all dimensions.

Horizontal Expanding Tee (ET)

2 pair splice plates with hardware included.

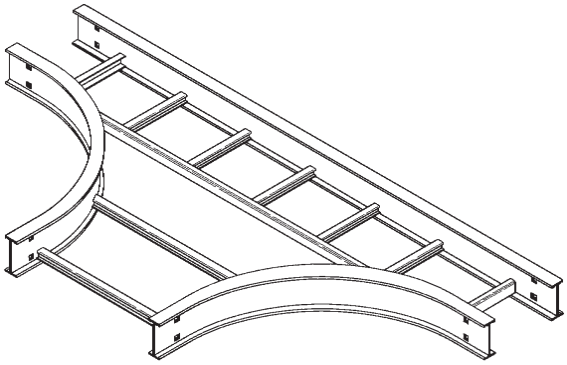

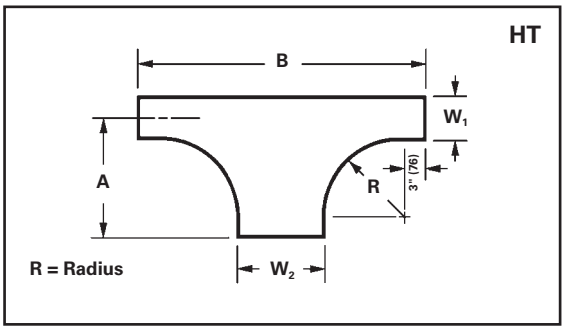

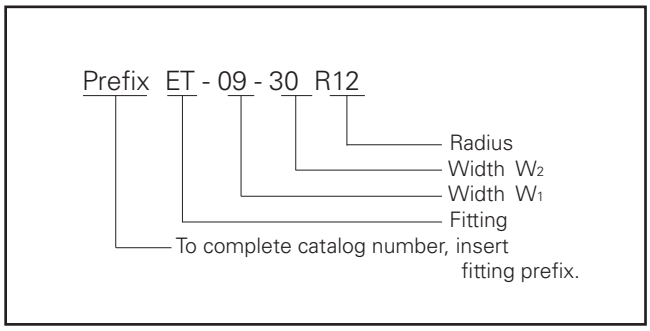

Ladder Width W1 in.	Ladder Width W1 mm	Ladder Width W2 in.	Ladder Width W2 mm	* Insert Radius (12", 24", or 36") Catalog No.	12" Radius A in.	12" Radius A mm	12" Radius B in.	12" Radius B mm	24" Radius A in.	24" Radius A mm	24" Radius B in.	24" Radius B mm	36" Radius A in.	36" Radius A mm	36" Radius B in.	36" Radius B mm
6	152	9	228	**(Prefix)ET-06-09-R***	18 1/16	458	39 7/8	1013	30 1/16	763	64 1/4	1631	42 1/16	1068	87 1/4	2241
		12	305	**(Prefix)ET-06-12-R***	18 1/16	458	42 1/4	1073	30 1/16	763	66 9/16	1691	42 1/16	1068	90 9/16	2301
		18	457	**(Prefix)ET-06-18-R***	18 1/16	458	48 1/2	1232	30 1/16	763	72 1/16	1830	42 1/16	1068	96 1/16	2440
		24	609	**(Prefix)ET-06-24-R***	18 1/16	458	54 13/16	1392	30 1/16	763	78 3/8	1991	42 1/16	1068	102 3/8	2601
		30	762	**(Prefix)ET-06-30-R***	18 1/16	458	60 1/4	1532	30 1/16	763	84 5/8	2150	42 1/16	1068	108 5/8	2760
		36	914	**(Prefix)ET-06-36-R***	18 1/16	458	66 9/16	1691	30 1/16	763	90 15/16	2310	42 1/16	1068	114 15/16	2920
9	228	12	305	**(Prefix)ET-09-12-R***	19 9/16	497	42 1/4	1073	31 9/16	801	66 9/16	1691	43 9/16	1106	90 9/16	2301
		18	457	**(Prefix)ET-09-19-R***	19 9/16	497	48 1/2	1232	31 9/16	801	72 1/16	1830	43 9/16	1106	96 1/16	2440
		24	609	**(Prefix)ET-09-24-R***	19 9/16	497	54 13/16	1392	31 9/16	801	78 3/8	1991	43 9/16	1106	102 3/8	2601
		30	762	**(Prefix)ET-09-30-R***	19 9/16	497	60 1/4	1532	31 9/16	801	84 5/8	2150	43 9/16	1106	108 5/8	2760
		36	914	**(Prefix)ET-09-36-R***	19 9/16	497	66 9/16	1691	31 9/16	801	90 15/16	2310	43 9/16	1106	114 15/16	2920
12	305	18	457	**(Prefix)ET-12-18-R***	21 1/16	535	48 1/2	1232	33 1/16	839	72 1/16	1830	45 1/16	1144	96 1/16	2440
		24	609	**(Prefix)ET-12-24-R***	21 1/16	535	54 13/16	1392	33 1/16	839	78 3/8	1991	45 1/16	1144	102 3/8	2601
		30	762	**(Prefix)ET-12-30-R***	21 1/16	535	60 1/4	1532	33 1/16	839	84 5/8	2150	45 1/16	1144	108 5/8	2760
		36	914	**(Prefix)ET-12-36-R***	21 1/16	535	66 9/16	1691	33 1/16	839	90 15/16	2310	45 1/16	1144	114 15/16	2920
18	457	24	609	**(Prefix)ET-18-24-R***	24 1/16	611	54 13/16	1392	36 1/16	916	78 3/8	1991	48 1/16	1221	102 3/8	2601
		30	762	**(Prefix)ET-18-30-R***	24 1/16	611	60 1/4	1532	36 1/16	916	84 5/8	2150	48 1/16	1221	108 5/8	2760
		36	914	**(Prefix)ET-18-36-R***	24 1/16	611	66 9/16	1691	36 1/16	916	90 15/16	2310	48 1/16	1221	114 15/16	2920
24	609	30	762	**(Prefix)ET-24-30-R***	27 1/16	687	60 1/4	1532	39 1/16	992	84 5/8	2150	51 1/16	1297	108 5/8	2760
		36	914	**(Prefix)ET-24-36-R***	27 1/16	687	66 9/16	1691	39 1/16	992	90 15/16	2310	51 1/16	1297	114 15/16	2920
30	762	36	914	**(Prefix)ET-30-36-R***	30 1/16	763	66 9/16	1691	42 1/16	1068	90 15/16	2310	54 1/16	1373	114 15/16	2920

(Pre) See page AL-10 for catalog number prefix.
Width dimensions are to inside wall.
Manufacturing tolerances apply to all dimensions.

Horizontal Reducing Tee (RT)

2 pair splice plates with hardware included.

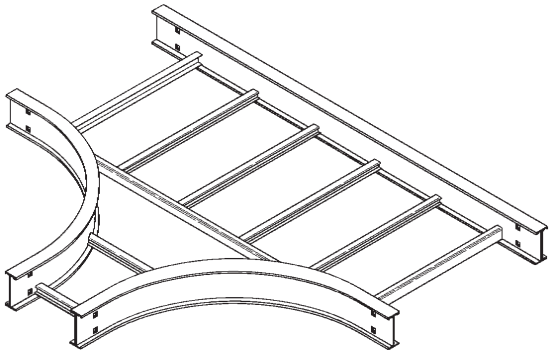

Prefix RT - 36 - 18 R24

- Radius
- Width W_2
- Width W_1
- Fitting
- To complete catalog number, insert fitting prefix.

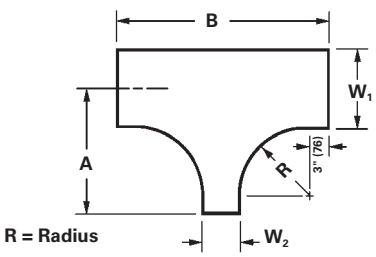

Ladder Width W1 in.	W1 mm	W2 in.	W2 mm	* Insert Radius (12", 24", or 36") Catalog No.	12" Radius A in.	12" Radius A mm	12" Radius B in.	12" Radius B mm	24" Radius A in.	24" Radius A mm	24" Radius B in.	24" Radius B mm	36" Radius A in.	36" Radius A mm	36" Radius B in.	36" Radius B mm
9	228	6	152	**(Prefix)RT-09-06-R***	19 9/16	497	36 3/4	933	31 9/16	801	61 1/16	1551	43 9/16	1106	85 1/16	2161
12	305	6	152	**(Prefix)RT-12-06-R***	21 1/16	535	36 3/4	933	33 1/16	839	61 1/16	1551	45 1/16	1144	85 1/16	2161
		9	228	**(Prefix)RT-12-09-R***	21 1/16	535	39 7/8	1013	33 1/16	839	64 1/4	1631	45 1/16	1144	88 1/4	2241
18	475	6	152	**(Prefix)RT-18-06-R***	24 1/16	611	36 3/4	933	36 1/16	916	61 1/16	1551	48 1/16	1221	85 1/16	2161
		9	228	**(Prefix)RT-18-09-R***	24 1/16	611	39 7/8	1013	36 1/16	916	64 1/4	1631	48 1/16	1221	88 1/4	2241
		12	305	**(Prefix)RT-18-12-R***	24 1/16	611	42 1/4	1073	36 1/16	916	66 9/16	1691	48 1/16	1221	90 9/16	2301
24	609	6	152	**(Prefix)RT-24-06-R***	27 1/16	687	36 3/4	933	39 1/16	992	61 1/16	1551	51 1/16	1297	85 1/16	2161
		9	228	**(Prefix)RT-24-09-R***	27 1/16	687	39 7/8	1013	39 1/16	992	64 1/4	1631	51 1/16	1297	88 1/4	2241
		12	305	**(Prefix)RT-24-12-R***	27 1/16	687	42 1/4	1073	39 1/16	992	66 9/16	1691	51 1/16	1297	90 9/16	2301
		18	457	**(Prefix)RT-24-18-R***	27 1/16	687	48 1/2	1232	39 1/16	992	72 1/16	1830	51 1/16	1297	96 1/16	2440
30	762	6	152	**(Prefix)RT-30-06-R***	30 1/16	763	36 3/4	933	42 1/16	1068	61 1/16	1551	54 1/16	1373	85 1/16	2161
		9	228	**(Prefix)RT-30-09-R***	30 1/16	763	39 7/8	1013	42 1/16	1068	64 1/4	1631	54 1/16	1373	88 1/4	2241
		12	305	**(Prefix)RT-30-12-R***	30 1/16	763	42 1/4	1073	42 1/16	1068	66 9/16	1691	54 1/16	1373	90 9/16	2301
		18	457	**(Prefix)RT-30-18-R***	30 1/16	763	48 1/2	1232	42 1/16	1068	72 1/16	1830	54 1/16	1373	96 1/16	2440
		24	609	**(Prefix)RT-30-24-R***	30 1/16	763	54 13/16	1392	42 1/16	1068	78 1/8	1991	54 1/16	1373	102 1/8	2601
36	914	6	152	**(Prefix)RT-36-06-R***	33 1/16	839	36 3/4	933	45 1/16	1144	61 1/16	1551	57 1/16	1449	85 1/16	2161
		9	228	**(Prefix)RT-36-09-R***	33 1/16	839	39 7/8	1013	45 1/16	1144	64 1/4	1631	57 1/16	1449	88 1/4	2241
		12	305	**(Prefix)RT-36-12-R***	33 1/16	839	42 1/4	1073	45 1/16	1144	66 9/16	1691	57 1/16	1449	90 9/16	2301
		18	457	**(Prefix)RT-36-18-R***	33 1/16	839	48 1/2	1232	45 1/16	1144	72 1/16	1830	57 1/16	1449	96 1/16	2440
		24	609	**(Prefix)RT-36-24-R***	33 1/16	839	54 13/16	1392	45 1/16	1144	78 1/8	1991	57 1/16	1449	102 1/8	2601
		30	762	**(Prefix)RT-36-30-R***	33 1/16	839	60 1/4	1532	45 1/16	1144	84 5/8	2150	57 1/16	1449	108 5/8	2760

(Pre) See page AL-10 for catalog number prefix.
Width dimensions are to inside wall.
Manufacturing tolerances apply to all dimensions.

Aluminum

Horizontal Expanding/Reducing Cross (RX)

3 pair splice plates with hardware included.

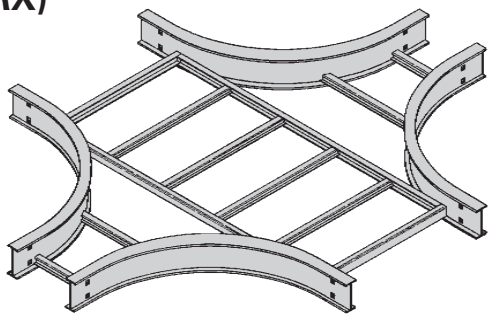

Prefix RX - 09 - 24 R24

- Radius
- Width W_2
- Width W_1
- Fitting
- To complete catalog number, insert fitting prefix.

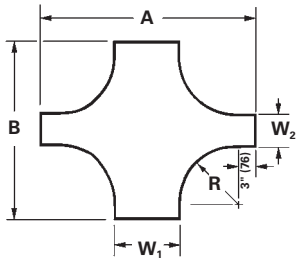

Ladder Width W1 in.	Ladder Width W1 mm	Ladder Width W2 in.	Ladder Width W2 mm	* Insert Radius (12", 24", or 36") Catalog No.	12" Radius A in.	12" Radius A mm	12" Radius B in.	12" Radius B mm	24" Radius A in.	24" Radius A mm	24" Radius B in.	24" Radius B mm	36" Radius A in.	36" Radius A mm	36" Radius B in.	36" Radius B mm
6	152	9	228	**(Prefix)RX-06-09-R***	36 3/4	933	39 7/8	1013	60 1/16	1525	64 1/4	1631	84 1/16	2135	88 1/4	2241
		12	305	**(Prefix)RX-06-12-R***	36 3/4	933	42 1/4	1073	60 1/16	1525	66 9/16	1691	84 1/16	2135	90 9/16	2301
		18	457	**(Prefix)RX-06-18-R***	36 3/4	933	48 1/2	1232	60 1/16	1525	72 1/16	1830	84 1/16	2135	96 1/16	2440
		24	609	**(Prefix)RX-06-24-R***	36 3/4	933	54 13/16	1392	60 1/16	1525	78 3/8	1991	84 1/16	2135	102 3/8	2601
		30	762	**(Prefix)RX-06-30-R***	36 3/4	933	60 1/4	1532	60 1/16	1525	84 5/8	2150	84 1/16	2135	108 5/8	2760
		36	914	**(Prefix)RX-06-36-R***	36 3/4	933	66 9/16	1691	60 1/16	1525	90 15/16	2310	84 1/16	2135	114 15/16	2920
9	228	12	305	**(Prefix)RX-09-12-R***	39 7/8	1013	42 1/4	1073	64 1/4	1632	66 9/16	1691	88 1/4	2242	90 9/16	2301
		18	457	**(Prefix)RX-09-19-R***	39 7/8	1013	48 1/2	1232	64 1/4	1632	72 1/16	1830	88 1/4	2242	96 1/16	2440
		24	609	**(Prefix)RX-09-24-R***	39 7/8	1013	54 13/16	1392	64 1/4	1632	78 3/8	1991	88 1/4	2242	102 3/8	2601
		30	762	**(Prefix)RX-09-30-R***	39 7/8	1013	60 1/4	1532	64 1/4	1632	84 5/8	2150	88 1/4	2242	108 5/8	2760
		36	914	**(Prefix)RX-09-36-R***	39 7/8	1013	66 9/16	1691	64 1/4	1632	90 15/16	2310	88 1/4	2242	114 15/16	2920
12	305	18	457	**(Prefix)RX-12-18-R***	42 1/4	1073	48 1/2	1232	66 9/16	1691	72 1/16	1830	90 9/16	2301	96 1/16	2440
		24	609	**(Prefix)RX-12-24-R***	42 1/4	1073	54 13/16	1392	66 9/16	1691	78 3/8	1991	90 9/16	2301	102 3/8	2601
		30	762	**(Prefix)RX-12-30-R***	42 1/4	1073	60 1/4	1532	66 9/16	1691	84 5/8	2150	90 9/16	2301	108 5/8	2760
		36	914	**(Prefix)RX-12-36-R***	42 1/4	1073	66 9/16	1691	66 9/16	1691	90 15/16	2310	90 9/16	2301	114 15/16	2920
18	457	24	609	**(Prefix)RX-18-24-R***	48 1/2	1232	54 13/16	1392	72 1/16	1830	78 3/8	1991	96 1/16	2440	102 3/8	2601
		30	762	**(Prefix)RX-18-30-R***	48 1/2	1232	60 1/4	1532	72 1/16	1830	84 5/8	2150	96 1/16	2440	108 5/8	2760
		36	914	**(Prefix)RX-18-36-R***	48 1/2	1232	66 9/16	1691	72 1/16	1830	90 15/16	2310	96 1/16	2440	114 15/16	2920
24	609	30	762	**(Prefix)RX-24-30-R***	54 13/16	1392	60 1/4	1532	78 3/8	1991	84 5/8	2150	102 3/8	2601	108 5/8	2760
		36	914	**(Prefix)RX-24-36-R***	54 13/16	1392	66 9/16	1691	78 3/8	1991	90 15/16	2310	102 3/8	2601	114 15/16	2920
30	762	36	914	**(Prefix)RX-30-36-R***	60 1/4	1530	66 9/16	1691	84 5/8	2149	90 15/16	2310	108 1/8	2759	114 15/16	2920

(Pre) See page AL-10 for catalog number prefix.
Width dimensions are to inside wall.
Manufacturing tolerances apply to all dimensions.

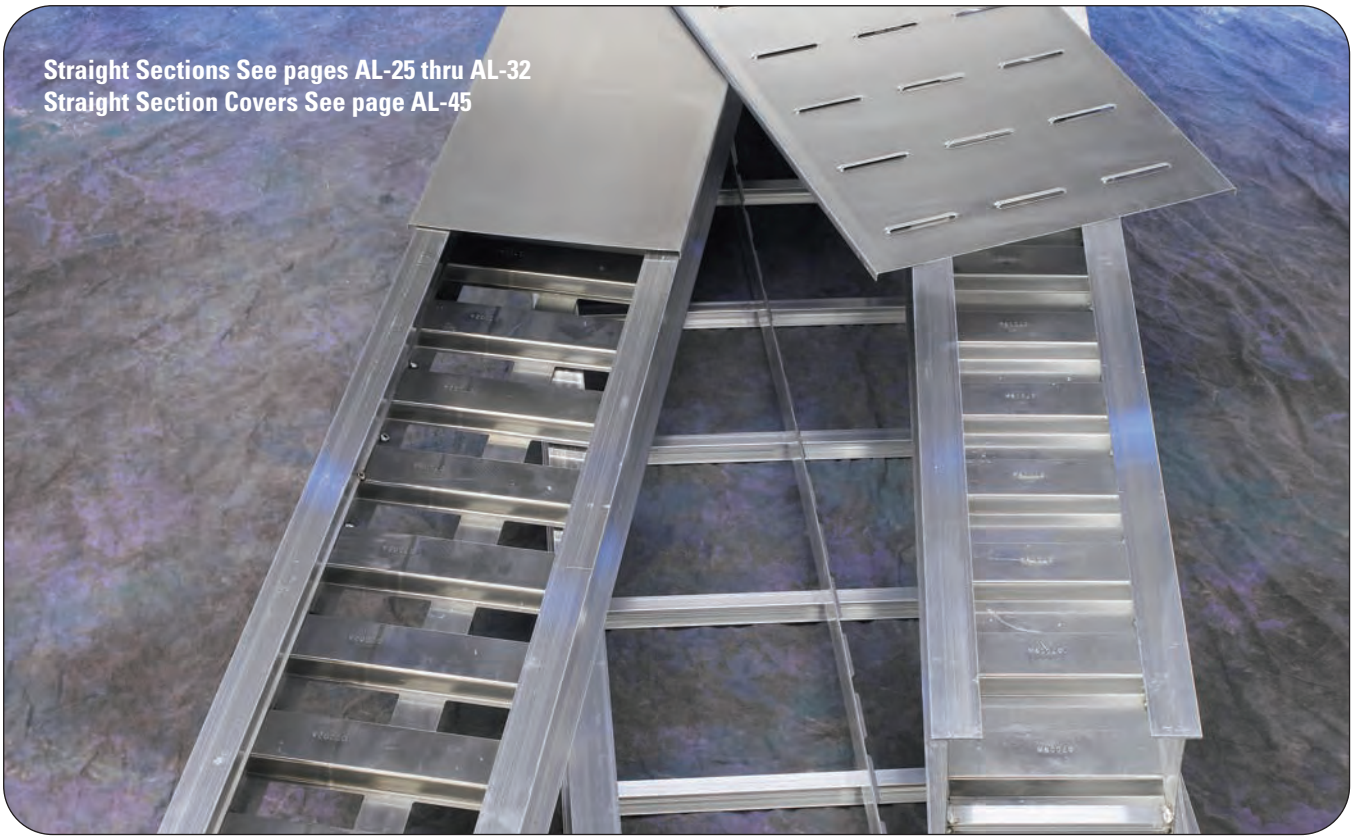
Straight Sections See pages AL-25 thru AL-32
Straight Section Covers See page AL-45

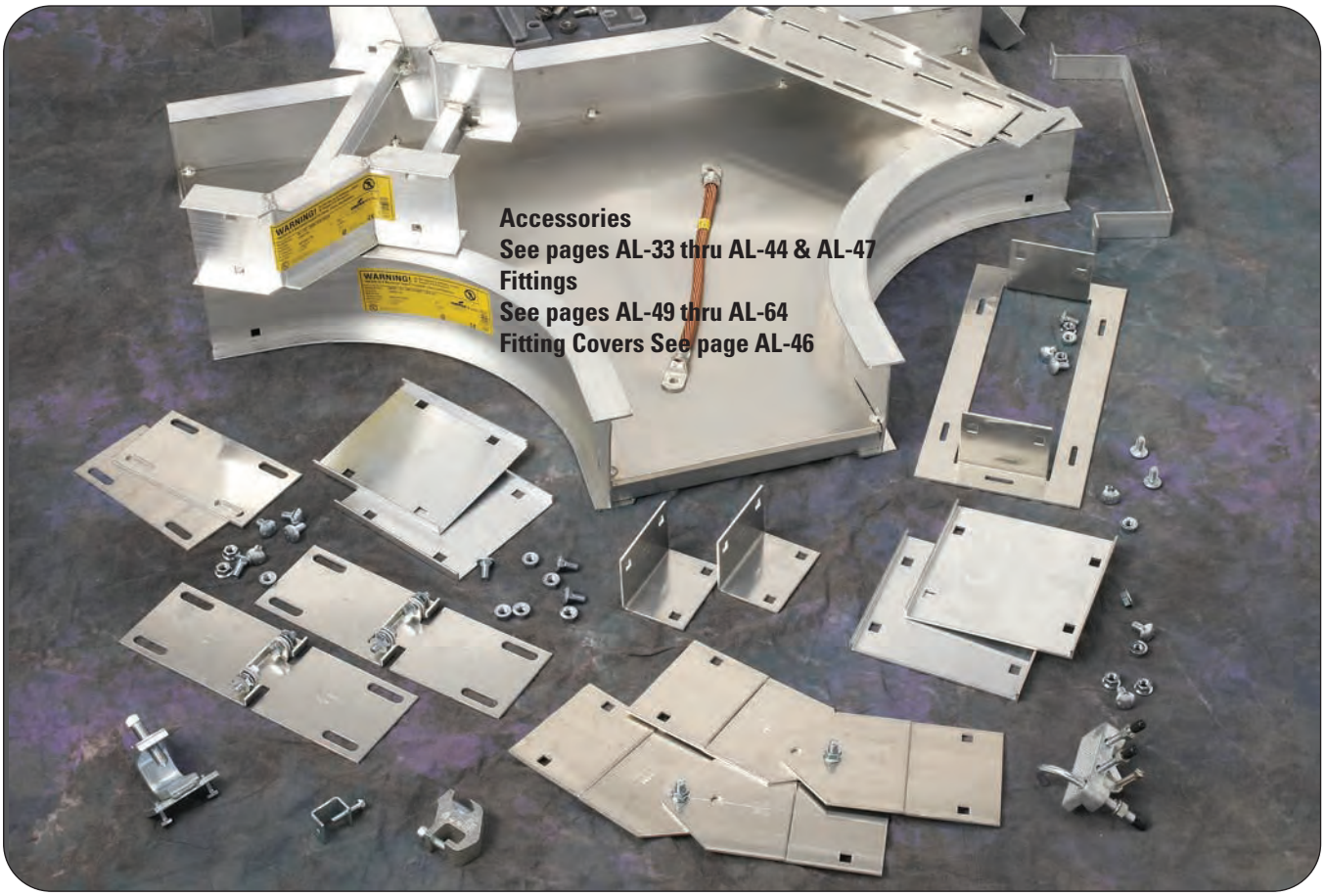
Accessories
See pages AL-33 thru AL-44 & AL-47
Fittings
See pages AL-49 thru AL-64
Fitting Covers See page AL-46

Aluminum Cable Ladder, Series 2, 3 & 4

Side Rails

B-Line I-Beam -- the most efficient cable ladder side rail

Constructed with "Copper-free" 6063-T6 Aluminum Alloy

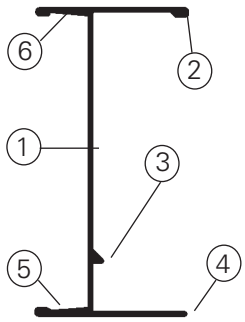

1. **I-beam side rail design**
   - maximize strength-to-weight ratio
2. **Engineered Design: Optimizes load capacity**
3. **Weld bead**
   - positive rung support
   - added material disperses heat
4. **Bottom flange inside**
   - positive rung support
5. **Bottom flange outside**
   - lower flange for hold down clamps and expansion guides
6. **Top flange outside**
   - upper flange for securing the ladder cover or the conduit-to-ladder adapter

Rungs

The rungs can represent 40% of your cable ladder system.

Rung A Standard for widths through 24"
The 24" width supports 589 lbs. with safety factor 1.5

Rung B Standard for widths greater than 24"
The 36" width supports 487 lbs. with safety factor 1.5

Splices

Unique Wedge Lock splice system:

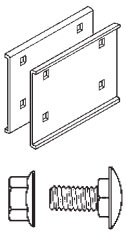

- Channel-shaped for extra strength
- Snaps into the side rail
- Positions and holds for bolting, a labor-saving feature
- Four bolt pattern reduces installation time
- 316 Stainless Steel available

Fittings

Surpasses NEMA VE 1 requirements
3" straight tangents for splice integrity

200 lb. Concentrated Load

Rungs and side rail engineered to support a 200 lb. concentrated load plus cable load

3" NEMA VE 1 Loading Depth
4" Side Rail Height

Straight Section Part Numbering

Prefix

Example: **24 A 09 - 24 - 144**

Series	Material	*Type	*Width	Length
24	**A** = Aluminum	**Ladder-** **06** = 6" rung spacing **09** = 9" rung spacing **12** = 12" rung spacing **Trough-** 6" thru 36" wide **VT** = Vented Trough **ST** = Non-Ventilated Trough	**06** = 6" **09** = 9" **12** = 12" **18** = 18" **24** = 24" **30** = 30" **36** = 36"	① **144** = 12 ft. ② 120 = 10 ft.
34				① **240** = 20 ft. ② 144 = 12 ft.

①Primary Length.
②Secondary Length.

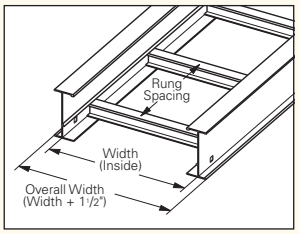

See page MIS-2 for additional rung options. *Special sizes available.

Ladder Type
(Specify Rung Spacing)

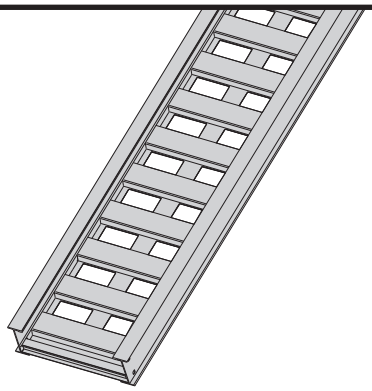

Ventilated Trough

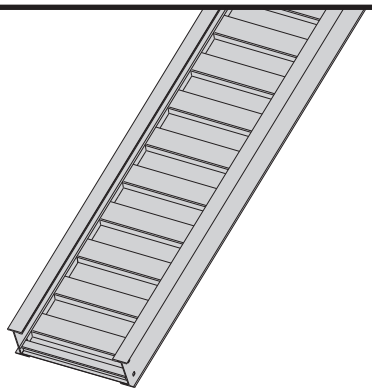

Non-Ventilated Trough

Dimensional & Loading Information

3" NEMA VE 1 Loading Depth
4" Side Rail Height

Values are based on simple beam tests per NEMA VE 1 on 36" wide cable ladder with rungs spaced on 12" centers. Cable ladders will support without collapse a 200 lb. (90.7 kg) concentrated load over and above published loads. Published load safety factor is 1.5. To convert 1.5 safety factor to 2.0, multiply the published load by 0.75. To obtain mid-span deflection, multiply a load by the deflection multiplier. Cable ladder must be supported on spans shorter than or equal to the length of the cable ladder being installed.

Individual rungs will support without collapse a 200 lb. (90.7 kg) concentrated load applied at the mid-span of the rung, over and above the NEMA rated cable load with a 1.5 safety factor for highlighted NEMA spans and loads.

B-Line Series & Side Rail Dimensions	NEMA, CSA & UL Classifications	Span ft	Span meters	Load lbs/ft	Load kg/m	Deflection Multiplier		Design Factors for Two Rails	
24 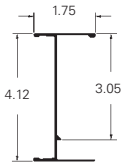	NEMA: 16A, 12C	6	1.8	487*	725*	0.001	0.017		
	CSA: D1-3m	8	2.4	284	422	0.003	0.055	Area=1.05 in^2	Area=6.77 cm^2
		10	3.0	181	270	0.008	0.135	Sx=1.34 in^3	Sx=21.96 cm^3
	UL Cross-Sectional	12	3.7	126	187	0.016	0.279	Ix=2.85 in^4	Ix=118.63 cm^4
	Area: 1.00 in^2	14	4.3	93	138	0.030	0.518		
		16	4.9	71	105	0.052	0.883		

When ladders are used in continuous spans, the deflection of the ladder is reduced by as much as 50%.
Design factors: Ix = Moment of Inertia, Sx = Section Modulus.
* When using 18" rung spacing, load capacity is limited to 394 lbs/ft (586.27 kg/m) for 30" ladder width and 325 lbs/ft (483.6 kg/m) for 36" ladder width.

B-Line Series & Side Rail Dimensions	NEMA, CSA & UL Classifications	Span ft	Span meters	Load lbs/ft	Load kg/m	Deflection Multiplier		Design Factors for Two Rails	
34 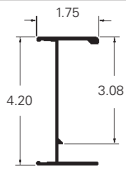	NEMA: 20B, 16C	10	3.0	320	476	0.005	0.077		
	CSA: E-6m	12	3.7	222	331	0.009	0.160	Area=1.82 in^2	Area=11.74 cm^2
		14	4.3	163	243	0.017	0.296	Sx=2.10 in^3	Sx=34.41 cm^3
	UL Cross-Sectional	16	4.9	125	186	0.030	0.505	Ix=4.98 in^4	Ix=207.28 cm^4
	Area: 1.50 in^2	18	5.5	99	147	0.047	0.810		
		20	6.1	80	119	0.072	1.234		

When ladders are used in continuous spans, the deflection of the tray is reduced by as much as 50%.
Design factors: Ix = Moment of Inertia, Sx = Section Modulus.

4" NEMA VE 1 Loading Depth
5" Side Rail Height

Straight Section Part Numbering

Prefix

Example: **25 A 09 - 24 - 144**

Series

25
35

Material

A = Aluminum

***Type**

Ladder-

06 = 6" rung spacing
09 = 9" rung spacing
12 = 12" rung spacing

Trough-

6" thru 36" wide

VT = Vented Trough
ST = Non-Ventilated Trough

***Width**

06 = 6"
09 = 9"
12 = 12"
18 = 18"
24 = 24"
30 = 30"
36 = 36"

Length

① **144** = 12 ft. ② 240 = 20 ft.	25
① **240** = 20 ft. ② 144 = 12 ft.	35

①Primary Length.
②Secondary Length.

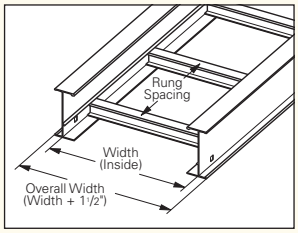

See page MIS-2 for additional rung options. *Special sizes available.

Ladder Type
(Specify Rung Spacing)

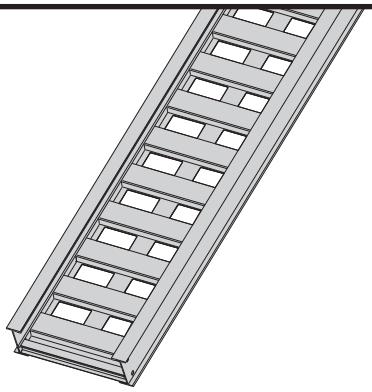

Ventilated Trough

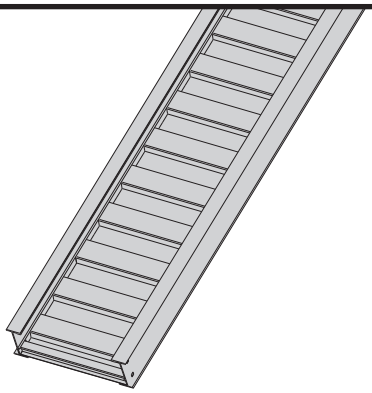

Non-Ventilated Trough

Aluminum

Dimensional & Loading Information

4" NEMA VE 1 Loading Depth
5" Side Rail Height

Values are based on simple beam tests per NEMA VE 1 on 36" wide cable ladder with rungs spaced on 12" centers. Cable ladders will support without collapse a 200 lb. (90.7 kg) concentrated load over and above published loads. Published load safety factor is 1.5. To convert 1.5 safety factor to 2.0, multiply published load by 0.75. To obtain mid-span deflection, multiply a load by the deflection multiplier. Cable ladder must be supported on spans shorter than or equal to the length of the cable ladder being installed.

Individual rungs will support without collapse a 200 lb. (90.7 kg) concentrated load applied at the mid-span of the rung, over and above the NEMA rated cable load with a 1.5 safety factor for highlighted NEMA spans and loads.

B-Line Series & Side Rail Dimensions	NEMA, CSA & UL Classifications	Span ft	Span meters	Load lbs/ft	Load kg/m	Deflection Multiplier		Design Factors for Two Rails	
25 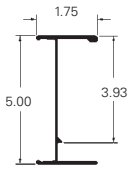	NEMA: 20A, 12C CSA: D1-6m UL Cross-Sectional Area: 1.00 in²	10	3.0	200	298	0.0049	0.083		
		12	3.7	139	207	0.010	0.172	Area=1.24 in²	Area=8.00 cm²
		14	4.3	102	152	0.019	0.319	Sx=1.80 in³	Sx=29.50 cm³
		16	4.9	78	116	0.032	0.545	Ix=4.62 in⁴	Ix=192.30 cm⁴
		18	5.5	62	92	0.051	0.873		
		20	6.1	50	74	0.078	1.330		

When ladders are used in continuous spans, the deflection of the ladder is reduced by as much as 50%.
Design factors: Ix = Moment of Inertia, Sx = Section Modulus.

B-Line Series & Side Rail Dimensions	NEMA, CSA & UL Classifications	Span ft	Span meters	Load lbs/ft	Load kg/m	Deflection Multiplier		Design Factors for Two Rails	
35 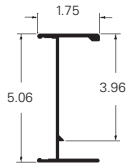	NEMA: 20B, 16C CSA: E-3m UL Cross-Sectional Area: 1.50 in²	10	3.0	310	461	0.0035	0.060		
		12	3.7	215	320	0.0073	0.125	Area=1.67 in²	Area=10.77 cm²
		14	4.3	158	235	0.014	0.232	Sx=2.35 in³	Sx=38.51 cm³
		16	4.9	121	180	0.023	0.395	Ix=6.37 in⁴	Ix=265.14 cm⁴
		18	5.5	96	142	0.037	0.633		
		20	6.1	77	115	0.057	0.965		

When ladders are used in continuous spans, the deflection of the ladder is reduced by as much as 50%.
Design factors: Ix = Moment of Inertia, Sx = Section Modulus.

5" NEMA VE 1 Loading Depth
6" Side Rail Height

Straight Section Part Numbering

Prefix

Example: **26 A 09 - 24 - 144**

Series	Material	*Type	*Width	Length	
26	**A** = Aluminum	**Ladder-** **06** = 6" rung spacing **09** = 9" rung spacing **12** = 12" rung spacing	**06** = 6" **09** = 9" **12** = 12" **18** = 18" **24** = 24" **30** = 30" **36** = 36"	① **144** = 12 ft. ② 240 = 20 ft.	26
36				① **240** = 20 ft. ② 144 = 12 ft.	36
46				① **240** = 20 ft. ② 288 = 24 ft.	46
H46†		**Trough-** 6" thru 36" wide **VT** = Vented Trough **ST** = Non-Ventilated Trough		① **240** = 20 ft. ② 300 = 25 ft.	H46

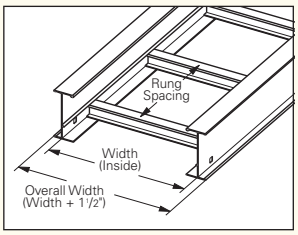

† H46A only available in ladder type 9" and 12" rung spacing.

①Primary Length.
②Secondary Length.

See page MIS-2 for additional rung options. *Special sizes available.

Ladder Type
(Specify Rung Spacing)

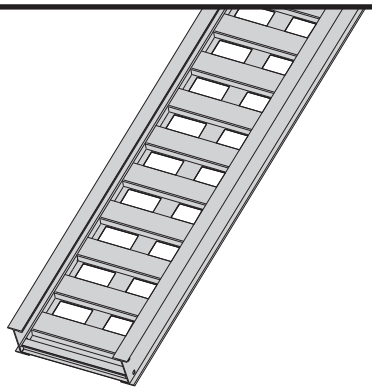

Ventilated Trough

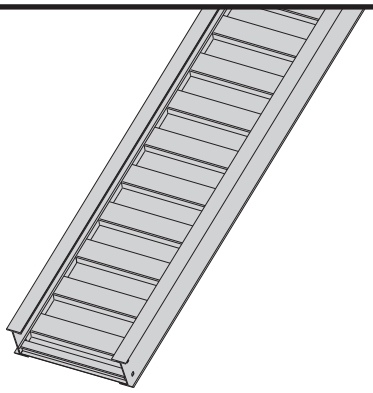

Non-Ventilated Trough

Dimensional & Loading Information

5" NEMA VE 1 Loading Depth
6" Side Rail Height

Values are based on simple beam tests per NEMA VE 1 on 36" wide cable ladder with rungs spaced on 12" centers. Cable ladders will support, without collapse, a 200 lb. (90.7 kg) concentrated load over and above published loads. Published load safety factor is 1.5. To convert 1.5 safety factor to 2.0, multiply the published load by 0.75. To obtain mid-span deflection, multiply a load by the deflection multiplier. Cable ladder must be supported on spans shorter than or equal to the length of the cable ladder being installed.

Individual rungs will support without collapse a 200 lb. (90.7 kg) concentrated load applied at the mid-span of the rung, over and above the NEMA rated cable load with a 1.5 safety factor for highlighted NEMA spans and loads.

B-Line Series & Side Rail Dimensions	NEMA, CSA & UL Classifications	Span ft	Span meters	Load lbs/ft	Load kg/m	Deflection Multiplier		Design Factors for Two Rails	
26 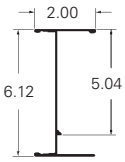	NEMA: 20A, 20B CSA: D1-6m UL Cross-Sectional Area: 1.00 in²	10	3.0	204	304	0.0028	0.049	Area=1.41 in²	Area=9.10 cm²
		12	3.7	142	211	0.006	0.101	Sx=2.53 in³	Sx=41.46 cm³
		14	4.3	104	155	0.011	0.186	Ix=7.915 in⁴	Ix=329.45 cm⁴
		16	4.9	80	119	0.019	0.318		
		18	5.5	63	94	0.030	0.509		
		20	6.1	51	76	0.045	0.776		

B-Line Series & Side Rail Dimensions	NEMA, CSA & UL Classifications	Span ft	Span meters	Load lbs/ft	Load kg/m	Deflection Multiplier		Design Factors for Two Rails	
36 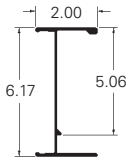	NEMA: 16C CSA: E-6m UL Cross-Sectional Area: 1.50 in²	12	3.7	233	347	0.0043	0.073	Area=1.81 in²	Area=11.68 cm²
		14	4.3	171	255	0.008	0.136	Sx=3.36 in³	Sx=55.06 cm³
		16	4.9	131	195	0.014	0.232	Ix=10.85 in⁴	Ix=451.61 cm⁴
		18	5.5	104	154	0.022	0.372		
		20	6.1	84	125	0.033	0.566		
		22	6.7	69	103	0.049	0.829		

B-Line Series & Side Rail Dimensions	NEMA, CSA & UL Classifications	Span ft	Span meters	Load lbs/ft	Load kg/m	Deflection Multiplier		Design Factors for Two Rails	
46 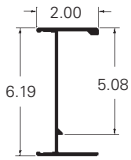	NEMA: 20C CSA: E-6m UL Cross-Sectional Area: 1.50 in²	14	4.3	210	313	0.0071	0.121	Area=2.06 in²	Area=13.29 cm²
		16	4.9	161	239	0.012	0.207	Sx=3.59 in³	Sx=58.83 cm³
		18	5.5	127	189	0.019	0.331	Ix=12.18 in⁴	Ix=506.97 cm⁴
		20	6.1	103	153	0.030	0.505		
		22	6.7	85	127	0.043	0.739		
		24	7.3	72	106	0.061	1.046		

B-Line Series & Side Rail Dimensions	NEMA, CSA & UL Classifications	Span ft	Span meters	Load lbs/ft	Load kg/m	Deflection Multiplier		Design Factors for Two Rails	
H46 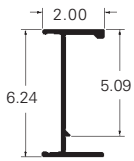	NEMA: 20C+ CSA: 131 kg/m 7.6m UL Cross-Sectional Area: 2.00 in²	16	4.9	261	388	0.0085	0.145	Area=2.95 in²	Area=19.03 cm²
		18	5.5	206	307	0.014	0.233	Sx=5.33 in³	Sx=87.34 cm³
		20	6.1	167	248	0.021	0.355	Ix=17.30 in⁴	Ix=720.08 cm⁴
		22	6.7	138	205	0.030	0.520		
		23	7.3	116	173	0.043	0.737		
		25	7.6	88	131	0.051	0.867		

When ladders are used in continuous spans, the deflection of the ladder is reduced by as much as 50%.
Design factors: Ix = Moment of Inertia, Sx = Section Modulus.

6" NEMA VE 1 Loading Depth
7" Side Rail Height

Straight Section Part Numbering

Prefix

Example: **37 A 09 - 24 - 240**

Series	Material	*Type	*Width	Length
37	**A** = Aluminum	**Ladder-** **06** = 6" rung spacing **09** = 9" rung spacing **12** = 12" rung spacing	**06** = 6" **09** = 9" **12** = 12" **18** = 18" **24** = 24" **30** = 30" **36** = 36"	① **240** = 20 ft. ② 144 = 12 ft. — 37
47				① **240** = 20 ft. ② 288 = 24 ft. — 47
H47†				① **240** = 20 ft. ② 300 = 25 ft. — H47
57†				① **360** = 30 ft. ② 300 = 25 ft. — 57

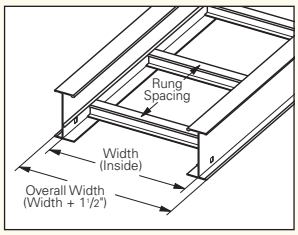

Trough-
6" thru 36" wide
VT = Vented Trough
ST = Non-Ventilated Trough

† H47A & 57A only available in ladder type 9" and 12" rung spacing.

①Primary Length.
②Secondary Length.

See page MIS-2 for additional rung options. *Special sizes available.

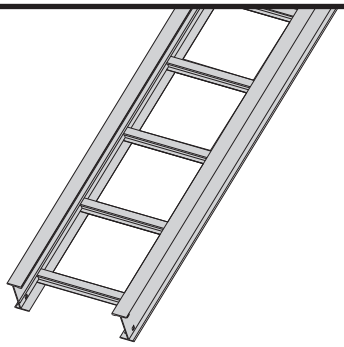

Ladder Type
(Specify Rung Spacing)

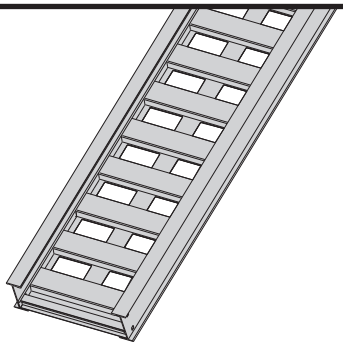

Ventilated Trough

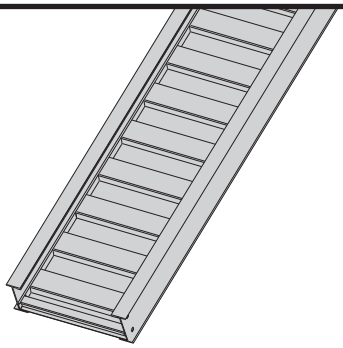

Non-Ventilated Trough

57A available in
(9" & 12" rung spacing in
12" to 36" widths)

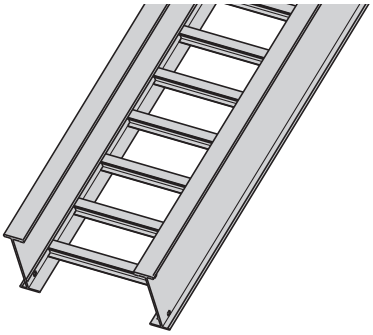

Aluminum

Dimensional & Loading Information

6" NEMA VE 1 Loading Depth
7" Side Rail Height

Values are based on simple beam tests per NEMA VE 1 on 36" wide cable ladder with rungs spaced on 12" centers. Cable ladders will support without collapse a 200 lb. (90.7 kg) concentrated load over and above published loads. Published load safety factor is 1.5. To convert 1.5 safety factor to 2.0, multiply the published load by 0.75. To obtain mid-span deflection, multiply a load by the deflection multiplier. Cable ladder must be supported on spans shorter than or equal to the length of the cable ladder being installed.

Individual rungs will support without collapse a 200 lb. (90.7 kg) concentrated load applied at the mid-span of the rung, over and above the NEMA rated cable load with a 1.5 safety factor for highlighted NEMA spans and loads.

B-Line Series & Side Rail Dimensions	NEMA, CSA & UL Classifications	Span ft	Span meters	Load lbs/ft	Load kg/m	Deflection Multiplier		Design Factors for Two Rails	
37 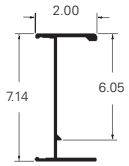	NEMA: 20B, 16C	12	3.7	222	331	0.0035	0.059		
	CSA: 106 kg/m 6.1m	14	4.3	163	243	0.0064	0.109	Area=1.81 in²	Area=11.68 cm²
		16	4.9	125	186	0.011	0.186	Sx=3.77 in³	Sx=61.78 cm³
	UL Cross-Sectional	18	5.5	99	147	0.017	0.299	Ix=13.50 in⁴	Ix=561.91 cm⁴
	Area: 1.50 in²	20	6.1	80	119	0.027	0.455		
		22	6.7	66	98	0.039	0.666		

B-Line Series & Side Rail Dimensions	NEMA, CSA & UL Classifications	Span ft	Span meters	Load lbs/ft	Load kg/m	Deflection Multiplier		Design Factors for Two Rails	
47 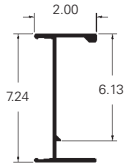	NEMA: 20C	14	4.3	204	304	0.0048	0.083		
	CSA: 142 kg/m 6.1m	16	4.9	156	233	0.0082	0.141	Area=2.38 in²	Area=15.35 cm²
		18	5.5	123	184	0.0132	0.225	Sx=4.94 in³	Sx=80.95 cm³
	UL Cross-Sectional	20	6.1	100	149	0.0201	0.344	Ix=17.88 in⁴	Ix=744.22 cm⁴
	Area: 2.00 in²	22	6.7	83	123	0.0295	0.503		
		24	7.3	69	103	0.0418	0.713		

B-Line Series & Side Rail Dimensions	NEMA, CSA & UL Classifications	Span ft	Span meters	Load lbs/ft	Load kg/m	Deflection Multiplier		Design Factors for Two Rails	
H47 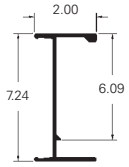	NEMA: 20C+	16	4.9	233	346	0.110	0.0064		
	CSA: 241 kg/m 6.1m	18	5.5	184	274	0.010	0.176	Area=3.04 in²	Area=19.61 cm²
		20	6.1	149	222	0.016	0.268	Sx=6.10 in³	Sx=99.96 cm³
	UL Cross-Sectional	22	6.7	123	183	0.023	0.393	Ix=22.91 in⁴	Ix=953.59 cm⁴
	Area: 2.00 in²	24	7.3	103	154	0.033	0.556		
		25	7.6	95	142	0.038	0.655		

B-Line Series & Side Rail Dimensions	NEMA, CSA & UL Classifications	Span ft	Span meters	Load lbs/ft	Load kg/m	Deflection Multiplier		Design Factors for Two Rails	
57 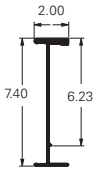	NEMA: 20C+	20	6.1	232	345	0.011	0.187		
	CSA: 152 kg/m 9.1m	22	6.7	192	285	0.016	0.274	Area=4.22 in²	Area=27.23 cm²
		24	7.3	161	240	0.023	0.388	Sx=7.73 in³	Sx=126.67 cm³
	UL Cross-Sectional	26	7.9	136	202	0.031	0.534	Ix=32.86 in⁴	Ix=1367.74 cm⁴
	Area: 2.00 in²	28	8.5	117	174	0.042	0.718		
		30	9.1	102	152	0.055	0.947		

When ladders are used in continuous spans, the deflection of the ladder is reduced by as much as 50%.
Design factors: Ix = Moment of Inertia, Sx = Section Modulus.

Wedge Lock Splice Plates
(Excluding H46, H47 & 57 Series)

- Standard 4-hole pattern (except 9A-1007).
- Furnished in pairs, with hardware.
- One pair including hardware provided with each section.
- Boxed in pairs with hardware.
- For field installation drill 13/32" hole.

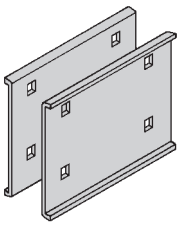

Catalog No.	Height in.	Height mm
9A-1004	4	101
9A-1005	5	127
9A-1006	6	152
9A-1007	7	178

H46A, H47A and 57A Mid-Span Splice

- Standard for H46A, H47A and 57A straight sections.
- Six bolt design 1/2" Stainless Steel Type 316 hardware standard.
- Available on ladder bottoms only. 09 and 12" rung spacing.

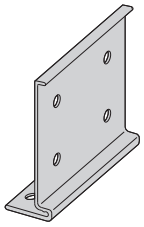

Catalog No.	Ladder Series
9A-6006	H46A
9A-6007	H47A, 57A

Expansion Splice Plates

- Expansion plates allow for one inch expansion or contraction of the cable ladder, or where expansion joints occur in the supporting structure.
- Furnished in pairs with hardware.
- **Bonding Jumpers are required on each siderail. Order Separately.**

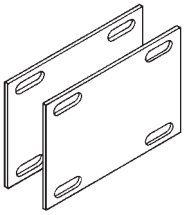

Catalog No.	Height in.	Height mm
9A-1014	4	101
9A-1015	5	127
9A-1016	6	152
9A-1017	7	178

Universal Splice Plates

- Used to splice to existing cable ladder systems.
- Furnished in pairs with hardware.

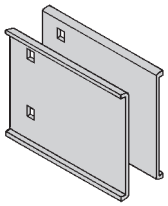

Catalog No.	Height in.	Height mm
9A-1004-1/2	4	101
9A-1005-1/2	5	127
9A-1006-1/2	6	152
9A-1007-1/2	7	178

Step Down Splice Plates

- These splice plates are offered for connecting cable ladder sections having side rails of different heights.
- Furnished in pairs with hardware.

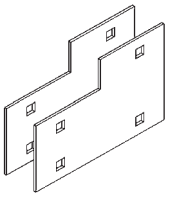

Catalog No.	Height in.	Height mm
9A-1045	5 to 4	127 to 101
9A-1046	6 to 4	152 to 101
9A-1060	6 to 5	152 to 127
9A-1047	7 to 4	178 to 101
9A-1061	7 to 5	178 to 127
9A-1062	7 to 6	178 to 152

Vertical Adjustable Splice Plates

- These plates provide for changes in elevation that do not conform to standard vertical fittings.
- Furnished in pairs with hardware.
- **Bonding Jumper not required.**

Requires supports within 24" on both sides, per NEMA VE 2.

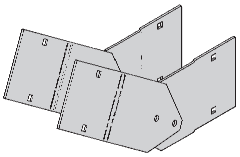

Catalog No.	Height in.	Height mm
9A-1024	4	101
9A-1025	5	127
9A-1026	6	152
9A-1027	7	178

Horizontal Adjustable Splice Plates

- Offered to adjust a cable ladder run for changes in direction in a horizontal plane that do not conform to standard horizontal fittings.
- Furnished in pairs with hardware.
- New design bonding jumpers **not** required.
- (X) Insert 4, 5, 6 or 7 for side rail height.

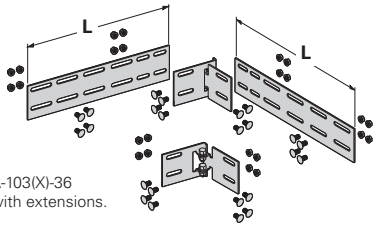

9A-103(X)-12 or 9A-103(X)-36
One pair splice plates with extensions.

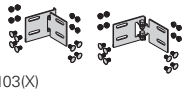

9A-103(X)
Splice only

Requires supports within 24" on both sides, per NEMA VE 2.

Catalog No.	Ladder End Cut	Ladder Width	'L'
9A-103(X)	Mitered	Thru 36"	N/A
9A-103(X)-12	Not Mitered	Thru 12"	16"
9A-103(X)-36	Not Mitered	Thru 36"	41"

Branch Pivot Connectors

- Branch from existing cable ladder runs at any point.
- Pivot to any required angle.
- UL Classified for grounding (bonding jumper not required).
- Furnished in pairs with hardware.

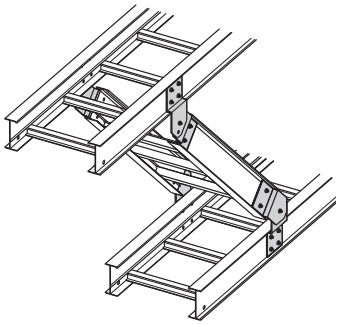

Catalog No.	Height in.	Height mm
9A-2044	4	101
9A-2045	5	127
9A-2046	6	152
9A-2047	7	178

Cross Connector Bracket

- For field connecting crossing section.
- Furnished in pairs with 3/8" hardware.

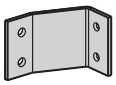

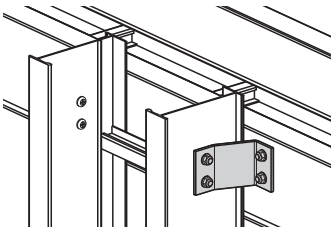

Catalog No.
9A-1240

Offset Reducing Splice Plate

- This plate is used for joining cable ladders having different widths. When used in pairs they form a straight reduction; when used with standard splice plate, they form an offset reduction.
- Furnished as one plate with hardware.
- (‡) Insert reduction

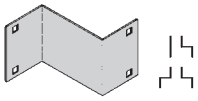

Catalog No.	Height in.	Height mm
9A-1064-(‡)	4	101
9A-1065-(‡)	5	127
9A-1066-(‡)	6	152
9A-1067-(‡)	7	178

Ladder Hardware - For field installation drill 13/32" hole.

Standard Ladder Hardware

Finish: Zinc Plated ASTM B633, SC1

Square Neck Carriage Bolt
ASTM A307 Grade A

Catalog No.
SNCB 3/8" x 3/4" Znplt

Serrated Flange Hex Nut
ASTM A563 Grade A

Catalog No.
SFHN 3/8"-16 Znplt

Optional Ladder Hardware

Square Neck Carriage Bolt
AISI 316 Stainless Steel

Catalog No.
SNCB 3/8" x 3/4" SS6

Serrated Flange Hex Nut
AISI 316 Stainless Steel

Catalog No.
SFHN 3/8"-16 SS6

To order optional 316 Stainless Steel hardware add SS6 suffix to part number

Example: 9A-1004SS6

Ladder to Box Splice Plates

- Used to attach the end of a cable ladder run to a distribution box or control panel.
- Furnished in pairs with hardware.

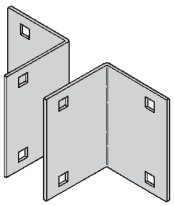

Catalog No.	Height in.	Height mm
9A-1054	4	101
9A-1055	5	127
9A-1056	6	152
9A-1057	7	178

Frame Type Box Connector

- Designed to attach the end of a cable ladder run to a distribution cabinet or control center to help reinforce the box at the point of entry.
- Furnished with ladder connection hardware.
- (‡) Insert ladder width

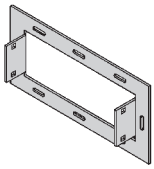

Catalog No.	Height in.	Height mm
9A-1074-(‡)	4	101
9A-1075-(‡)	5	127
9A-1076-(‡)	6	152
9A-1077-(‡)	7	178

Blind End

- This plate forms a closure for a dead end cable ladder.
- Furnished as one plate with hardware.
- (‡) Insert ladder width

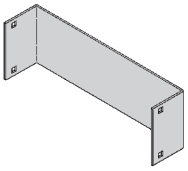

Catalog No.	Height in.	Height mm
9A-1084-(‡)	4	101
9A-1085-(‡)	5	127
9A-1086-(‡)	6	152
9A-1087-(‡)	7	178

Conduit to Cable Ladder Adaptor

- Assembly required.
- Mounting hardware included.
- Conduit clamps provided.
- (‡) = Conduit size (1/2" thru 4").

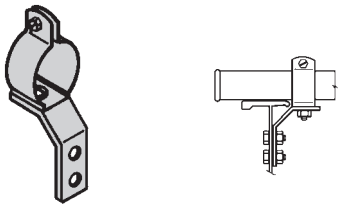

Catalog No.
9ZN-1150-(‡)

Conduit to Cable Ladder Adaptor

- Assembly required.
- Conduit clamp included.
- (‡) = Conduit size (1/2" thru 4").

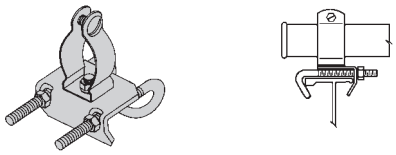

Catalog No.
9ZN-1155-(‡)

Cable Tie (Ladder Ladder)

- Nylon ties provide easy attachment of cable to ladder rungs; maximum cable O.D. is 3" (76mm).

Overall Length 15"

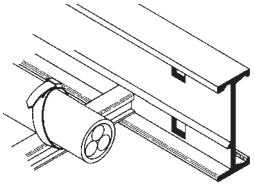

Catalog No.
99-2125-15

Conduit to Cable Ladder Adaptor

- For easy attachment of conduit terminating at a cable ladder.
- Use on aluminum or steel cable ladders.

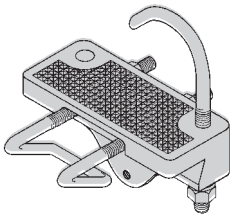

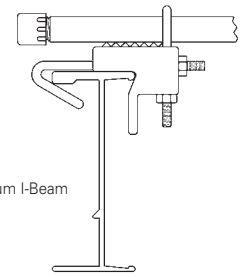

Aluminum I-Beam

Catalog No.	Conduit Size in.	Conduit Size mm
9G-1158-1/2, 3/4	1/2, 3/4	15, 20
9G-1158-1, 1 1/4	1, 1 1/4	25, 32
9G-1158-1 1/2, 2	1 1/2, 2	40, 50
9G-1158-2 1/2, 3	2 1/2, 3	65, 80
9G-1158-3 1/2, 4	3 1/2, 4	90, 100

Ladder Drop-Out

- Specially-designed Ladder Drop-Outs provide a rounded surface with 4" (101 mm) radius to protect cable as it exits from the cable ladder, preventing damage to insulation. The drop-out will attach to any desired rung.
- (‡) Insert ladder width

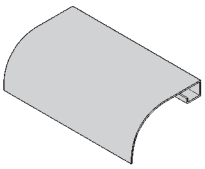

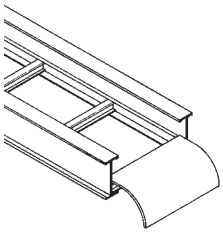

Catalog No.
9A-1104-(‡)

Trough Drop-Out & Drop-Out Bushing

- These devices provide a rounded surface to protect cable as it exits from the trough-type cable ladder.
- Hardware is included for attachment of the trough bottom drop-out.
- (‡) Insert ladder width

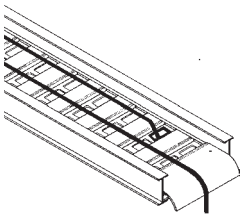

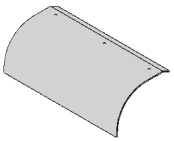

Catalog No.
9A-1104T-(‡)

Trough-Type Drop-Out

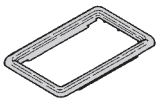

Catalog No.
99-1124

Snap-In Plastic Bushing

Straight Section Barriers

- Standard length: 120" (3 m) 144" (12 ft.).
- Order catalog number based on loading depth.
- Furnished with four #10 x 1/2" plated self-drilling screws and a 99-9982 splice.

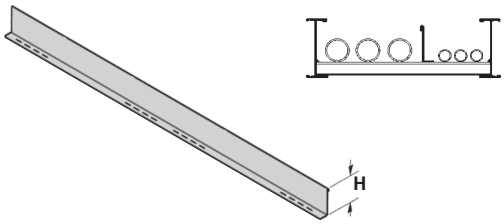

Length = 144 for 12' or 120 for 10'

Catalog No.	Side Rail Height in.	Side Rail Height mm	Loading Depth 'H' in.	Loading Depth 'H' mm
73A-Length	4	101	3	76
74A-Length	5	127	4	101
75A-Length	6	152	5	127
76A-Length	7	178	6	152

Horizontal Bend Barriers

- Horizontal Bend Barriers are flexible in order to conform to any horizontal fitting radius. Cut to length.
- Order catalog number based on loading depth.
- Furnished with three #10 x 1/2" zinc plated self-drilling screws and a 99-9982 Barrier Strip Splice.
- Standard length is 72" (6 ft.), sold individually.

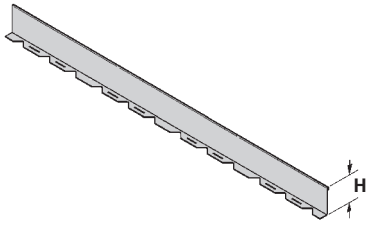

Catalog No.	Side Rail Height in.	Side Rail Height mm	Loading Depth 'H' in.	Loading Depth 'H' mm
73A-90HBFL	4	101	3	76
74A-90HBFL	5	127	4	101
75A-90HBFL	6	152	5	127
76A-90HBFL	7	178	6	152

Vertical Bend Barriers

- Vertical Bend Barriers are preformed to conform to a specific vertical fitting.
- Furnished with three #10 x 1/2" plated self-drilling screws and a 99-9982 Barrier Strip Splice.
- (*) Insert 30, 45, 60 or 90 for degrees
- (†) Insert 12, 24, 36 or 48 for radius

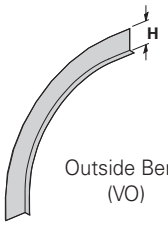

Outside Bend (VO)

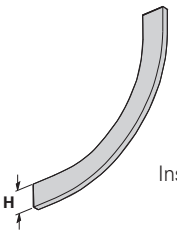

Inside Bend (VI)

Inside Bend Catalog No.	Outside Bend Catalog No.	Side Rail Height in.	Side Rail Height mm	Loading Depth 'H' in.	Loading Depth 'H' mm
73A-(*)VI(†)	**73A-(*)VO(†)**	4	101	3	76
74A-(*)VI(†)	**74A-(*)VO(†)**	5	127	4	101
75A-(*)VI(†)	**75A-(*)VO(†)**	6	152	5	127
76A-(*)VI(†)	**76A-(*)VO(†)**	7	178	6	152

Barrier Strip Clip

- Zinc plated steel barrier clip fastens to either aluminum or steel ladder rung.
- Furnished with one #10 x 1/2" zinc plated self-drilling screw.

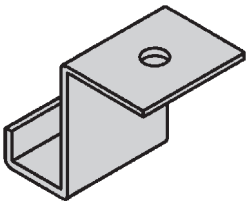

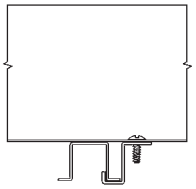

Catalog No.
9ZN-9002

Barrier Strip Splice

- Plastic splice holds adjoining barrier strips in straight alignment.

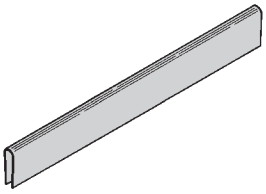

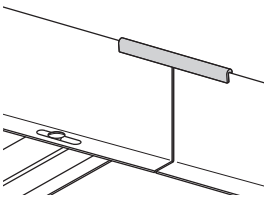

Catalog No.
99-9982

Aluminum

Stainless Steel Cable Clamp "P"

- Fits with series 2, 3, & 4 rungs.
- Attaches to rung at any point.
- 14 gauge Type 316 stainless steel material to minimize corrosion and induction heating.
- Plated steel and aluminum also available.

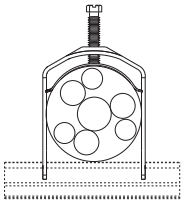

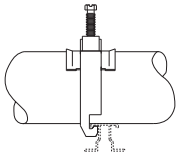

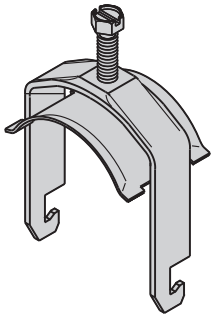

Refer Cable Fixing Section

Catalog No.	Cable Size in.	Cable Size mm
BP081SS	.250 - .840	6.4 - 21.3
BP110SS	.810 - 1.100	20.6 - 28.0
BP135SS	.850 - 1.350	21.6 - 34.8
BP175SS	1.250 - 1.750	31.8 - 44.5
BP205SS	1.550 - 2.050	39.4 - 52.1
BP250SS	2.000 - 2.500	50.8 - 63.5
BP300SS	2.500 - 3.000	63.5 - 76.2
BP325SS	2.750 - 3.250	69.9 - 82.6
BP375SS	3.250 - 3.750	82.6 - 95.3
BP425SS	3.750 - 4.250	95.3 - 108.0
BP475SS	4.250 - 4.750	108.0 - 120.7

Bonding Jumper

Use at each expansion splice and where the cable ladder is not mechanically/electrically continuous to ground. Sold individually.

- Hardware included.
- See table 392.7(B)(2) on page CLS-9 for amperage ratings required to match the UL cross-sectional area of the ladder.
- See ladder loading chart for UL cross-sectional area.
- Bonding jumper is 16" long.

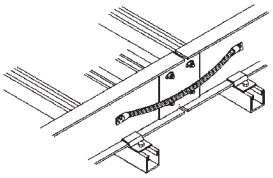

Catalog No.	Cross-Sectional Area	Ampacity
99-N1	0.40 Square inches	600
99-40	1.5 Square inches	1600
99-1620	2.0 Square inches	2000

Grounding Clamp

B-Line Cable Ladder is UL® classified as to its suitability as an equipment grounding conductor. If a separate conductor for additional grounding capability is desired, B-Line offers this clamp for bolting the conductor at least once to each cable ladder section.

- Accepts #6 AWG to 250 MCM.

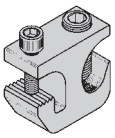

Catalog No.	Material
9A-2130	Tin Plated Aluminum

Ground Clamp

- Mechanically attaches grounding cables to cable ladder.
- Hardware included.
- (*) Insert ZN or SS4

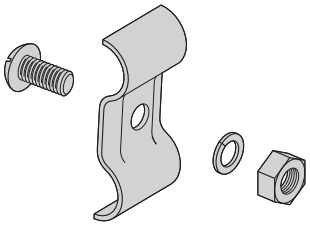

Catalog No.	Cable Size
9(*)-2351	#1 thru 2/0
9(*)-2352	3/0 thru 250 MCM

Hanger Rod Clamp

- For 1/2" ATR.
- Furnished in pairs.
- Order ATR and hex nuts separately.
- Two-piece "J"-hanger design.
- 1500 lbs./pair capacity safety factor 3.
- (*) Insert ZN or G

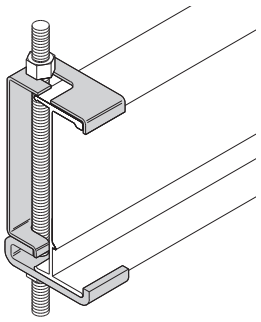

Catalog No.	Rail Height in.	Rail Height mm
9(*)-5324	4	101
9(*)-5325	5	127
9(*)-5326	6	152
9(*)-5327	7	178

Threaded Rod (ATR)

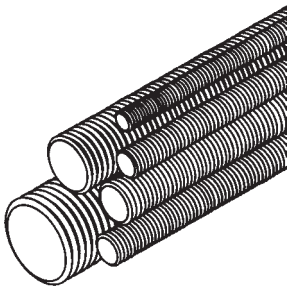

Loading based on safety factor 5.
Standard Finish: Zinc plated

Size	Loading lbs	Catalog No.	Available Lengths
3/8"-16	730	**ATR 3/8" x Length**	36", 72", 120", 144"
1/2"-13	1350	**ATR 1/2" x Length**	36", 72", 120", 144"

Threaded Rod Coupling

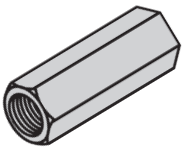

Loading based on safety factor 5.
Standard Finish: Zinc plated

Size	Loading lbs	Catalog No.
3/8"-16	730	**B655-3/8**
1/2"-13	1350	**B655-1/2**

Cable Ladder Clamp/Guide

- Features a no-twist design.
- Has four times the strength of the traditional design.
- Each side is labeled to ensure proper installation.
- Furnished in pairs, with or without hardware.

Patent # RE35479

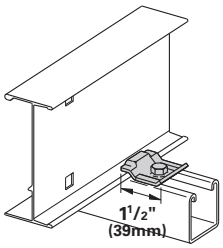

9ZN-1204 shown.
Installed as a guide.

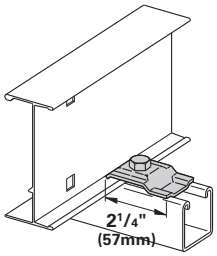

9ZN-1208 shown.
Installed as a clamp.

Note: For heavy duty or vertical applications see 9(*)-1241 or 9(*)-1242 page AL-43

Catalog No. Without Hardware	Catalog No. With Hardware	Overall Length in.	Overall Length mm	Hardware Size	Finish
9ZN-1204	**9ZN-1204NB**	1 1/2	38	1/4"	Znplt
9ZN-1208	**9ZN-1208NB**	2 1/4	57	3/8"	Znplt
9A-1205	**9A-1205NB**	2 1/4	57	1/2"	Alum.
9G-1205	**9G-1205NB**	2 1/4	57	1/2"	HDGAF
9SS6-1205	**9SS6-1205NB**	2 1/4	57	1/2"	316SS
9ZN-1205	**9ZN-1205NB**	2 1/4	57	1/2"	Znplt

Isolator Pad

- Use as a friction reducer and/or as a dissimilar metal isolator barrier.
- UV resistant HDPE.
- Temperature range: -100 to 160° F.
- Designed to use with 9(*)-1205 or 9(*)-1208 clamp/guide.

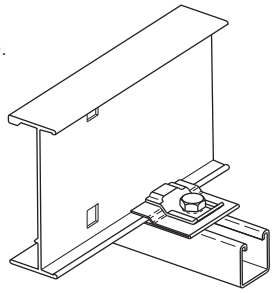

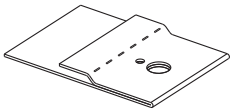

Isolation pad shown as when used with a guide.

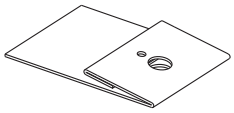

Isolation pad shown with top flange doubled under for clamp application.

Catalog No.
99-PE34

Aluminum

Cable Ladder Clamp

- Hold-down clamps for single or double cable ladder runs.
- No drilling of support I-beam or channel is required.
- Sold in pieces - two clamps are required per ladder.
- Maximum beam flange thickness 1 1/8" (28.58 mm).

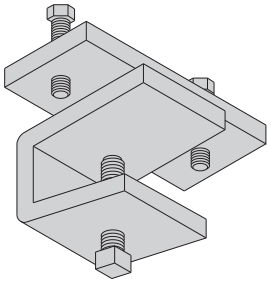

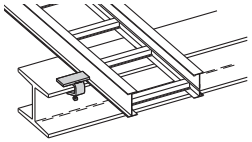

Catalog No.	Finish
9ZN-1249HD	Znplt
9G-1249HD	HDGAF

Cable Ladder Guide

- Expansion guide for single or double cable ladder runs.
- Guide allows for longitudinal movement of the cable ladder.
- No field drilling of support I-beam or channel is required.
- Guides are required on both sides of cable ladder to prevent lateral movement - can be placed on either the inside or outside flange of cable ladder.
- Guides are sold in pieces - two guides are required per ladder.
- Maximum flange thickness 1 1/8" (28.58 mm).

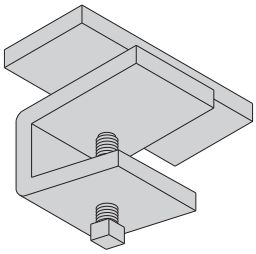

Catalog No.	Finish
9ZN-1249	Znplt
9G-1249	HDGAF

Nylon Pad

- Use for friction reduction.
- Hardness: Shore D80.
- Low friction coefficient.
- UV resistant.
- Excellent weatherability.
- UL - 94HB.

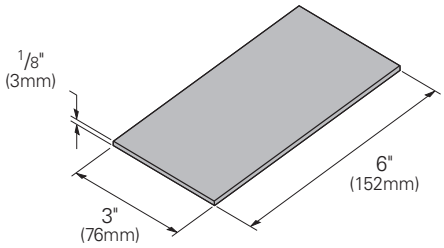

Catalog No.
99-PE36

Neoprene Roll

- Use for material isolation.
- 1/8" x 2" x 25' roll.
- Hardness: Shore A60.
- Good weatherability.

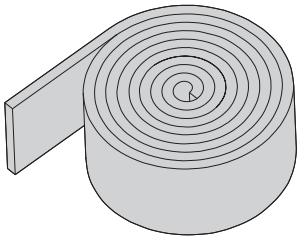

Catalog No.
99-NP300

Center Hung Ladder Support

- Allows cable to be laid-in from both sides.
- Eliminates costly cable pulling and field cutting of cable ladder supports. Labor costs are dramatically reduced.
- Required hardware and threaded rod material for trapeze assemblies are reduced by 50%.
- Designed for use with 1/2" threaded rod. (Order rod separately)
- Use with all aluminum and steel cable ladders through 24" width.
- Load capacity is 700 lbs. per support. Safety factor of 3.0. Eccentric loading is not to exceed a 60% vs. 40% load differential.
- Maximum recommended unsupported span length is 144"/12 ft. (3.66 m).
- Hardware shown is furnished.

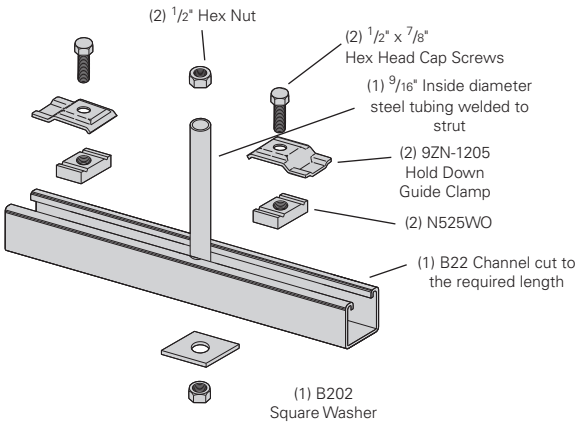

ZN = Zinc Plated

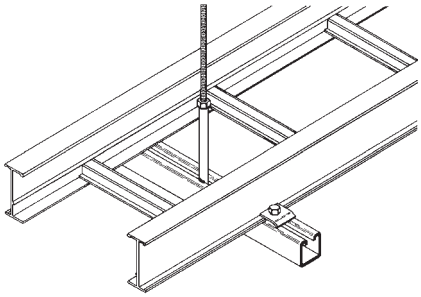

Catalog No.	Ladder Width	Channel Length
9ZN-5212	6", 9", 12"	18"
9ZN-5224	18", 24"	30"

Center Hung Support Hardware Kit

- Kits packaged in plastic bags.

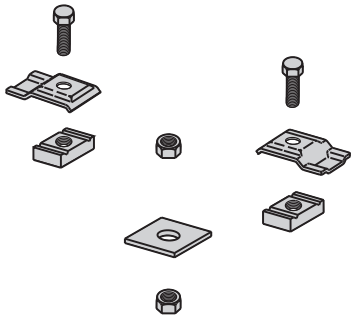

Catalog No.	Kit Contents
9ZN-5200	1 pr. 9ZN-1205 2 HHC Screw 1/2" x 7/8" ZN 2 N525 WO ZN 1 B202 ZN 1/2" sq washer 2 HN 1/2" ZN

Aluminum

Trapeze Support Kit

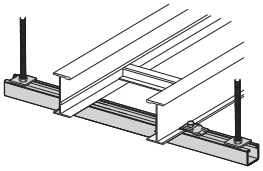

- Kits include the components required for a single trapeze support in one package. Available in pre-galvanized steel with zinc-plated hardware or hot dip galvanized steel with 316 stainless steel hardware.
- The SH channel provides the convenience of pre-punched slots, which eliminate the need for field drilling.
- The illustrated hardware is sealed in a plastic bag and boxed with the channel, which is pre-cut to the appropriate length as shown in the chart.
- Designed for use with 1/2" threaded rod. Order rod separately.

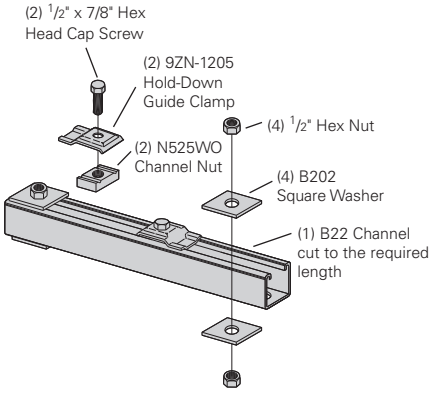

Catalog No.	Ladder Width		Channel Length		Uniform Load	
	in.	mm	in.	mm	lbs	kN
9P-5506-22SH(†)	6	152	16	406	1600	7.11
9P-5509-22SH(†)	9	229	18	457	1250	5.56
9P-5512-22SH(†)	12	305	22	559	1125	5.00
9P-5518-22SH(†)	18	457	28	711	865	3.85
9P-5524-22SH(†)	24	610	34	864	700	3.11
9P-5530-22SH(†)	30	762	40	1016	590	2.62
9P-5536-22SH(†)	36	914	46	1168	510	2.27
9P-5542-22SH(†)	42	1067	52	1321	450	2.00

- (†) Insert 3/8 for 3/8" threaded rod hardware.

Safety factor of 3.0 on all loads.

Heavy Duty Trapeze Support Kit

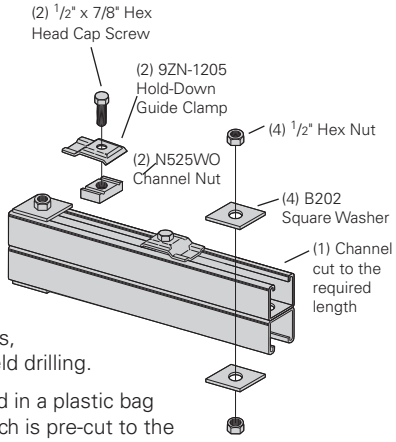

- Kits include the components required for a single trapeze support in one package.
- These kits are available in DURA-GREEN™ epoxy coated steel with zinc-plated hardware or hot dip galvanized steel with 316 stainless steel hardware.
- The SH channel provides the convenience of pre-punched slots, which eliminates the need for field drilling.
- The illustrated hardware is sealed in a plastic bag and boxed with the channel, which is pre-cut to the appropriate length as shown in the chart.
- Designed for use with 1/2" threaded rod. Order rod separately.

Catalog No.	Ladder Width		Channel Length		Uniform Load	
	in.	mm	in.	mm	lbs	kN
9(*)-5506-22SHA	6	152	16	406	1350	6.01
9(*)-5509-22SHA	9	229	18	457	1350	6.01
9(*)-5512-22SHA	12	305	22	559	1350	6.01
9(*)-5518-22SHA	18	457	28	711	1350	6.01
9(*)-5524-22SHA	24	610	34	864	1350	6.01
9(*)-5530-22SHA	30	762	40	1016	1350	6.01
9(*)-5536-22SHA	36	914	46	1168	1350	6.01
9(*)-5542-22SHA	42	1067	52	1321	1350	6.01

- (*) Insert GRN or G

Safety factor of 3.0 on all loads.

Trapeze Hardware Kit

- Kits packaged in plastic bags.

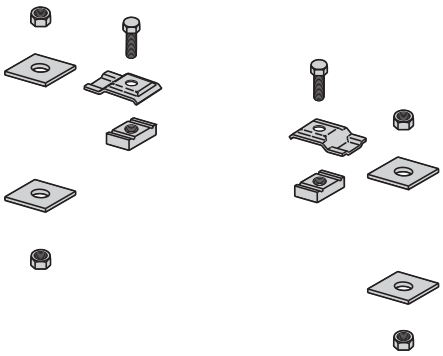

Catalog No.	Kit Contents
9ZN-5500-1/2	1 pr. 9ZN-1205 2 HHC Screw 1/2" x 7/8" ZN 2 N525 WO ZN 4 B202 ZN 1/2" sq washer 4 HN 1/2 ZN
9G-5500-1/2	1 pr. 9G-1205 2 HHC Screw 1/2" x 7/8" SS6 2 N525 WO SS6 4 B202 HDG 1/2" sq washer 4 HN 1/2 SS6

Bracket

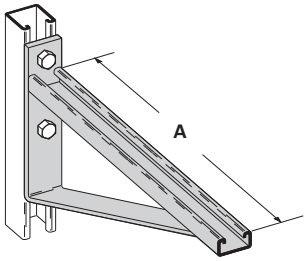

Finishes available: ZN, GRN or HDG
Safety Load Factor 2.5

Catalog No.	Uniform Load		Ladder Width		'A'	
	lbs	kN	in.	mm	in.	mm
B494-12	1580	7.02	6 & 9	152 & 229	12	305
B494-18	1000	4.45	12	305	18	457
B494-24	996	4.43	18	457	24	610

Bracket

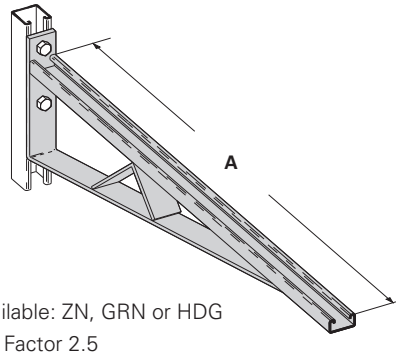

Finishes available: ZN, GRN or HDG
Safety Load Factor 2.5

Catalog No.	Uniform Load		Ladder Width		'A'	
	lbs	kN	in.	mm	in.	mm
B494-30	924	4.11	24	610	30	762
B494-36	864	3.84	30	762	36	914
B494-42	580	2.58	36	914	42	1067
B494-48	500	2.22	42	1067	48	1219

Cantilever Bracket

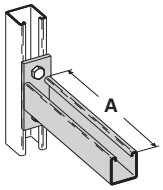

Finishes available: ZN, GRN, HDG, SS4 or SS6
Safety Load Factor 2.5

Catalog No.	Uniform Load		Ladder Width		'A'	
	lbs	kN	in.	mm	in.	mm
B409-12	960	4.27	6 & 9	152 & 229	12	305
B409-18	640	2.84	12	305	18	457
B409-24	480	2.13	18	457	24	610

Cantilever Bracket

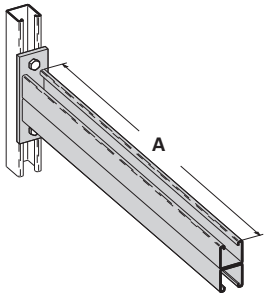

Finishes available: ZN, GRN, HDG, or SS4
Safety Load Factor 2.5

Catalog No.	Uniform Load		Ladder Width		'A'	
	lbs	kN	in.	mm	in.	mm
B297-12	1660	7.38	6 & 9	152 & 229	12	305
B297-18	1100	4.89	12	305	18	457
B297-24	835	3.71	18	457	24	610
B297-30	665	2.95	24	610	30	762
B297-36	550	2.44	30	762	36	914
B297-42	465	2.06	36	914	42	1067

Underfloor Support (U-Bolts not included)

U-Bolt Size	Fits Pipe O.D.
B501-3/4	.841 - 1.050
B501-1	1.051 - 1.315
B501-1 1/4	1.316 - 1.660
B501-1 1/2	1.661 - 1.900
B501-2	1.901 - 2.375
B501-2 1/2	2.376 - 2.875

- Order properly sized U-Bolts separately.

Finish available: ZN
Safety Load Factor 2.5

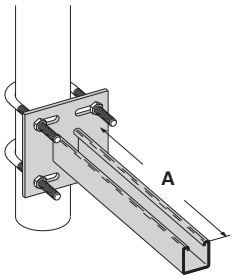

Catalog No.	Uniform Load		Ladder Width		'A'	
	lbs	kN	in.	mm	in.	mm
B409UF-12	800	3.55	6 & 9	152 & 229	12	305
B409UF-21	450	2.00	12 & 18	305 & 457	21	533

Vertical Hanger Splice Plates

- Design load is 1500 lbs/pair. Safety Factor of 2.5
- Furnished in pairs with hardware.

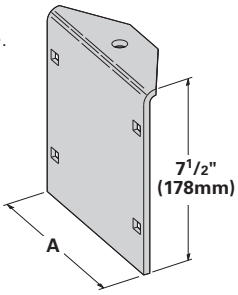

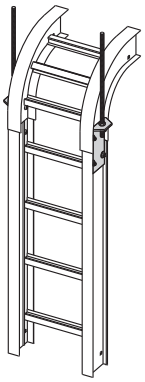

Catalog No.	Outside Ladder Ht.	'A' in.	'A' mm
9A-1224	4"	3.84	97.54
9A-1225	5"	4.73	120.14
9A-1226	6"	5.84	148.34
9A-1227	7"	6.84	173.74

Heavy Duty Hold Down Bracket

- Design load is 2000 lbs/pair.
- Two bolt design.
- Sold in pairs.
- 3/8" cable ladder attachment hardware provided.
- 1/2" support attachment hardware **not** provided.
- (*) Insert: ZN, SS4 or SS6

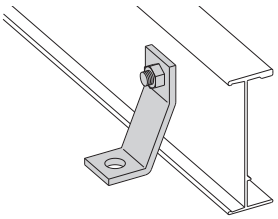

Catalog No.
9(*)-1241

Heavy Duty Hold-Down Bracket

- Design load is 4000 lbs/pair.
- Four bolt design.
- Sold in pairs.
- 3/8" cable ladder attachment hardware provided
- 1/2" support attachment hardware **not** provided.
- (*) Insert: ZN, SS4 or SS6

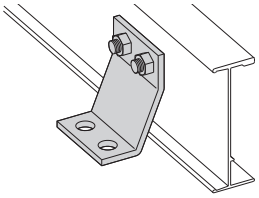

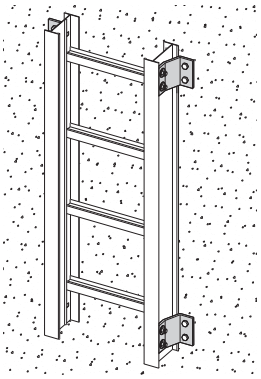

Catalog No.
9(*)-1242

Beam Clamp

- Finishes available: ZN or HDG
- Sold in pieces.

Design load when used in pairs.
Safety Load Factor 5.0

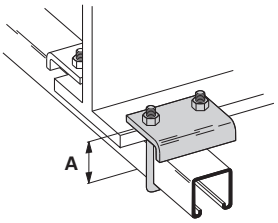

Catalog No.	Design Load* lbs	Design Load* kN	'A' in.	'A' mm
B441-22	1200	5.34	3 3/8	86
B441-22A	1200	5.34	5	127

Beam Clamp

- Finishes available: ZN, GRN, HDG or SS4
- Sold in pieces.
- Design load is 1200 lbs.when used in pairs.
- Safety Load Factor 5.0
- Order HHCS and Channel Nuts separately.

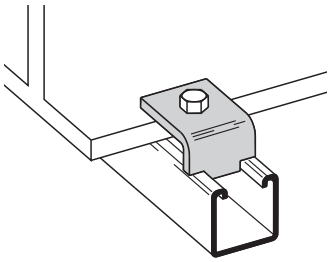

Catalog No.
B355

B305 Thru B308 & B321 Series Beam Clamps

- Finishes available: ZN or HDG
- Setscrew included.
- Safety Load Factor 5.0

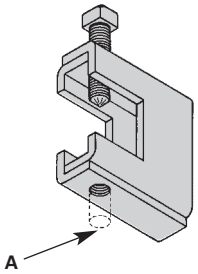

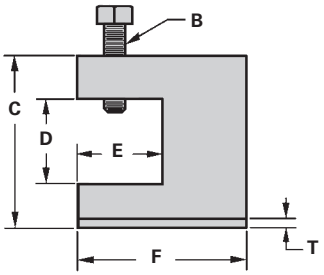

Cat. No.	Rod Size A	B	C	D	E	F	T	Design Load lbs	Design Load kN
B305	3/8"-16	3/8"-16	2 5/16	7/8	1 1/8	2 1/2	11 Ga.	600	2.67
B306	3/8"-16	1/2"-13	2 7/16	7/8	1 1/8	2 1/2	7 Ga.	1100	4.90
B307	1/2"-13	1/2"-13	2 7/16	7/8	1 1/8	2 1/2	7 Ga.	1100	4.90
B308	1/2"-13	1/2"-13	2 9/16	7/8	1 1/8	2 1/2	1/4	1500	6.68
B321-1	3/8"-16	1/2"-13	3 9/16	1 11/16	1 5/8	3 1/4	1/4	1300	5.79
B321-2	1/2"-13	1/2"-13	3 9/16	1 11/16	1 5/8	3 1/4	1/4	1400	6.23

B312 Anchor Strap

- Finish available: ZN
- For a maximum beam thickness of 3/4".
- For thicker beams, step up one flange width size.

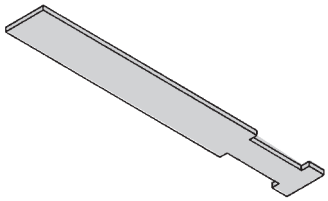

Cat. No.	Flange Width
B312-6	Up to 6"
B312-9	6" - 9"
B312-12	9" - 12"

Beam Clamp

- Finishes available: ZN, GRN or HDG
- Sold in pieces.

* Design load when used in pairs. Safety Load Factor 5.0

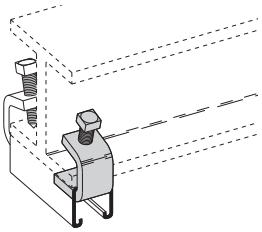

Catalog No.	Design Load* lbs	Design Load* kN	Max. Flange Thickness in.	Max. Flange Thickness mm	Material Thickness in.	Material Thickness mm
B212-1/4	600	2.67	3/4	28.6	1/4	6.3
B212-3/8	1000	4.45	1 1/8	6.3	3/8	9.5

Beam Clamp

- Finish available: ZN
- Design Load 500 lbs. (2.22 kN)
- Safety Load Factor 5.0
- Recommended torque: 'J'-Hook Nut 125 In.-Lbs. (14.1 kN/m)
- Maximum flange thickness of 3/4"

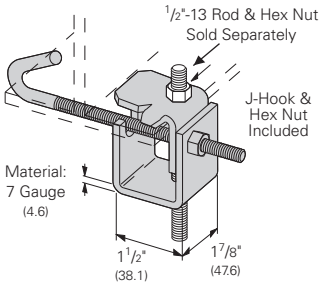

Catalog No.	For Flange Width in.	For Flange Width mm	Wt./C lbs	Wt./C kg
B750-J4	3 - 6	76.2 - 152.4	109	49.4
B750-J6	5 - 9	127.0 - 288.6	124	56.2
B750-J9	8 - 12	203.2 - 304.8	135	61.2
B750-J12	11 - 15	279.4 - 381.0	147	66.7

Beam Clamp

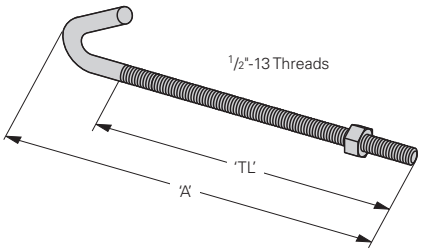

Catalog No.	'A' in.	'A' mm	Thread Length 'TL' in.	Thread Length 'TL' mm	Wt./C lbs	Wt./C kg
B700-J4	8 1/2	215.9	5	127.0	44	19.9
B700-J6	11 1/2	292.1	6	152.4	53	24.0
B700-J9	12 1/4	368.3	6	152.4	63	28.6
B700-J12	17 1/2	444.5	6	152.4	78	35.4

- Finish available: ZN
- Hex Nut included.

Straight Section Covers

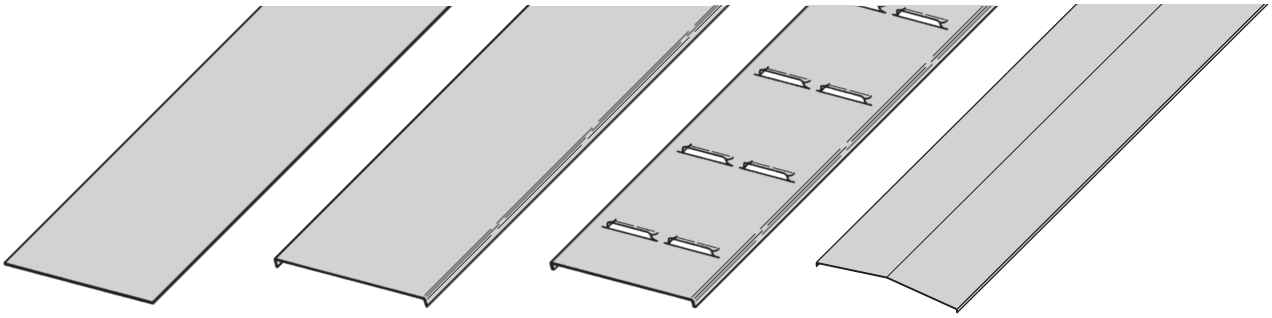

Solid Non-Flanged | Solid Flanged | Ventilated Flanged | Peaked Flanged

A full range of covers is available for straight sections and fittings.

Solid covers should be used when maximum enclosure of the cable is desired and no accumulation of heat is expected.
Ventilated covers provide an overhead cable shield, yet allow heat to escape.
B-Line recommends that covers be placed on vertical cable ladder runs to a height of 6 ft. (1.83 m) to 8 ft. (2.44 m) above the floor to isolate both cables and personnel.
Flanged covers have a 1/2 in. (13 mm) flange. All **peaked covers** are flanged. Standard peaked covers have 1/2" peak.
Cover clamps are not included with the covers and must be ordered separately.

Aluminum Straight Section Cover Part Numbering

Prefix | Suffix

Example: **80 7 A 40 - 24 - 144**

Cover Type	Detail	Material	Material Thickness	Ladder Width	Item Description
80 = Solid	6 = Non-Flanged (80 & 81 type only)	A = Aluminum	40 = .040 Aluminum	06 = 6"	For Straight Section Cover:
81 = Ventilated	7 = Flange			09 = 9"	144 = 12 ft. (3.66 m)
82 = Peaked				12 = 12"	120 = 10 ft. (3.05 m)
				18 = 18"	72 = 6 ft. (1.83 m)
				24 = 24"	60 = 5 ft. (1.52 m)
				30 = 30"	
				36 = 36"	

Covers 30" and 36" wide have reinforcing ridges.

Aluminum

Fitting Covers

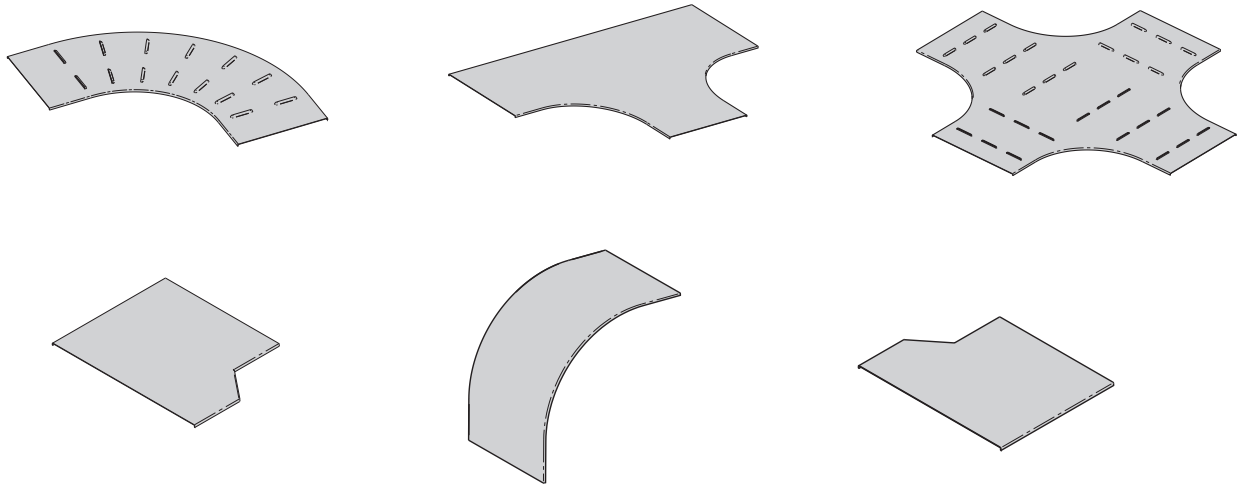

Aluminum Fitting Cover Part Numbering

Prefix — Suffix

Example: **80 7 A 40 - 06 - 90 HB 12 - 6** **(side rail height)**

Cover Type
80 = Solid
81 = Ventilated
82 = Peaked

Detail
6 = Non-Flanged (80 & 81 type only)
7 = Flange

Material
A = Aluminum

Material Thickness
40 = .040 Aluminum

HB **Insert HB Suffix from pages AL-50 & AL-51**
HT **Insert HT Suffix from pages AL-52**
HX **Insert HX Suffix from pages AL-52**
VI **Insert VI Suffix from pages AL-53 – AL-56**
VO **Insert VO Suffix from pages AL-53 – AL-56 & Side Rail Height**
VT **Insert VT Suffix from page AL-57 & Side Rail Height**
VTU **Insert VTU Suffix from page AL-57**
HYL **Insert HYL Suffix from page AL-58**
HYR **Insert HYR Suffix from page AL-58**
CSF **Insert CSF Suffix from pages AL-59 & Side Rail Height**
LR **Insert LR Suffix from page AL-61**
RR **Insert RR Suffix from page AL-61**
SR **Insert SR Suffix from page AL-61**
HT (Reducing) **Insert HT Reducing Suffix from page AL-62**
HT (Expanding) **Insert HT Expanding Suffix from page AL-63**
HX (Reducing) **Insert HX Red/Exp Suffix from page AL-64**

Covers 30" and 36" wide have reinforcing ridges.

Series 2, 3, 4, & 5 Aluminum Cable Ladder

Standard Cover Clamp

- For indoor service only.
- Setscrew included.
- Fits all side rail heights.
- Sold per piece.

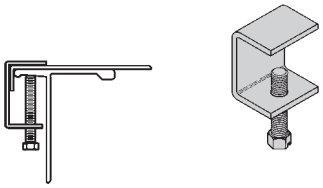

Catalog No.	Clamp Material
9ZN-9012	Zinc Plated Steel
9A-9012	Aluminum

Combination Cover and Hold Down Clamp

- Sold per piece.
- For indoor service only.

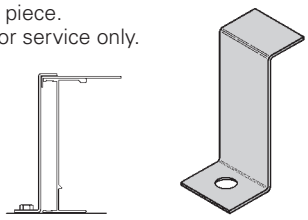

Catalog No.	Side Rail Height in.	Side Rail Height mm
9P-9043	4	101
9P-9053	5	127
9P-9063	6	152
9P-9073	7	178

Raised Cover Clamp

- For indoor service only.
- For use with flanged covers only.

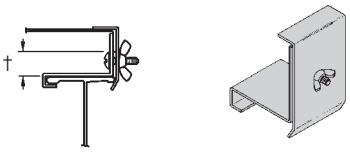

† Specify gap of 1", 2", 3" or 4".

Catalog No.	Side Rail Height
9ZN-9112-†	4" & 5" Deep
9ZN-9113-†	6" & 7" Deep

Heavy Duty Cover Clamp

- Recommended for outdoor service.

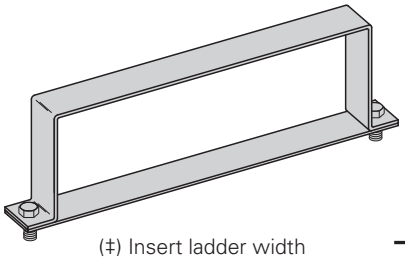

(‡) Insert ladder width
† Add P to Catalog No. for peaked cover clamp.

Peaked Cover Clamp

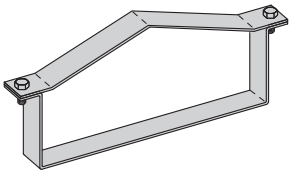

Catalog No.	Side Rail Height in.	Side Rail Height mm
9A-(‡)-9044†	4	101
9A-(‡)-9054†	5	127
9A-(‡)-9064†	6	152
9A-(‡)-9074†	7	178

Quantity of Standard Cover Clamps Required	
Straight Section 60" or 72"	4 pcs.
Straight Section 120" or 144"	6 pcs.
Horizontal/Vertical Bends	4 pcs.
Tees	6 pcs.
Crosses	8 pcs.

Note: When using the Heavy Duty Cover Clamp, only one-half the number of clamps stated above is required.

Cover Joint Strip

- Used to join covers
- Plastic
- (‡) Insert ladder width

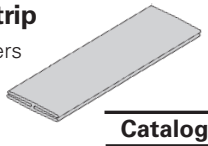

Catalog No.
99-9980-(‡)

Cable Cleats

(see pages CC-1 thru CC-5)

Trefoil Cable Cleats

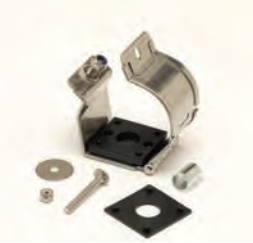

Single Cable Cleats

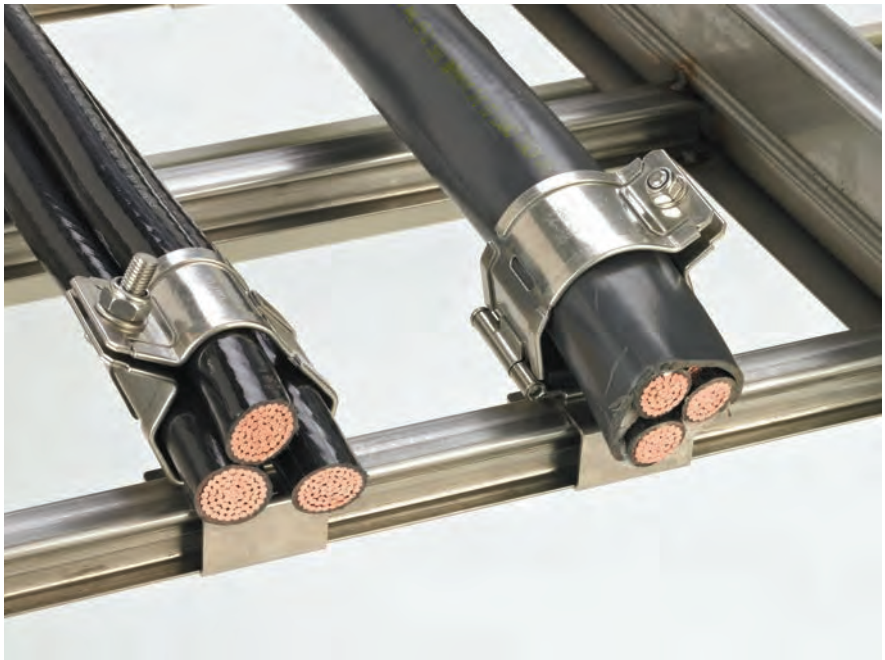

Section 1- Acceptable Manufacturers

1.01 Manufacturer: Subject to compliance with these specifications, cable ladder systems shall be as manufactured by Eaton's B-Line Business.

Section 2- Cable Ladder Sections and Components

2.01 General: Except as otherwise indicated, provide metal cable ladders, of types, classes and sizes indicated; with splice plates, bolts, nuts and washers for connecting units. Construct units with rounded edges and smooth surfaces; in compliance with applicable standards; and with the following additional construction features. Cable ladder shall be installed according to the latest revision of NEMA VE 2.

2.02 Materials and Finish: Straight section and fitting side rails and rungs shall be extruded from Aluminum Association Alloy 6063. All fabricated parts shall be made from Aluminum Association Alloy 5052.

2.03 Ladder Cable Ladders shall consist of two longitudinal members (side rails) with transverse members (rungs) welded to the side rails. Rungs shall be spaced [6] [9] [12] inches on center. Rung spacing in radiused fittings shall be industry standard 9" and measured at the center of the ladder's width. Each rung must be capable of supporting a 200 lb. concentrated load at the center of the cable ladder over and above the cable load with a safety factor of 1.5.

2.04 Ventilated Trough Cable Ladders shall consist of two longitudinal members (side rails) with a corrugated bottom welded to the side rails or rungs spaced 4" on center. The peaks of the corrugated bottom shall have a minimum flat cable bearing surface of $2^3/_4$" and shall be spaced on 6" centers. To provide ventilation in the ladder, the valleys of the corrugated bottom shall have $2^1/_4$" x 4" rectangular holes punched along the width of the bottom.

2.05 Non-Ventilated Bottom Trough Cable Ladders shall consist of two longitudinal members (side rails) with a corrugated bottom welded to the side rails or a solid sheet over rungs. The peaks of the corrugated bottom shall have a minimum flat cable bearing surface of $2^3/_4$" and shall be spaced on 6" centers.

2.06 Cable ladder loading depth shall be [3] [4] [5] [6] inches per NEMA VE 1.

2.07 Straight sections shall have side rails fabricated as I-beams. Straight sections shall be supplied in standard [12 foot] [24 foot] [10 foot (3 m)] [20 foot (6 m)] lengths.

2.08 Cable ladder widths shall be [6] [9] [12] [18] [24] [30] [36] inches or as shown on drawings.

2.09 Splice plates shall be the Wedge-Lock design with 4 nuts and bolts per plate. The resistance of fixed splice connections between an adjacent section of ladder shall not exceed 0.00033 ohm.

2.10 All fittings must have a minimum radius of [12] [24] [36] [48] inches.

Section 3- Loading Capacities and Testing

3.01 Cable ladder shall be capable of carrying a uniformly distributed load of _____ lbs./ft. on a _____ ft. support span with a safety factor of 1.5 when supported as a simple span and tested per NEMA VE 1 5.2. In addition to the uniformly distributed load the cable ladder shall support 200 lbs. concentrated load at mid-point of span. Load and safety factors specified are applicable to both the side rails and rung capacities. Cable ladder shall be made to manufacturing tolerances as specified by NEMA.

3.02 Upon request, manufacturer shall provide test reports in accordance with the latest revision of NEMA VE 1 or CSA C22.2 No. 126.

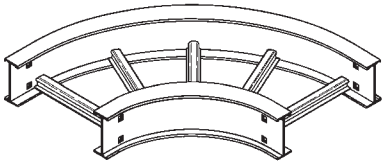

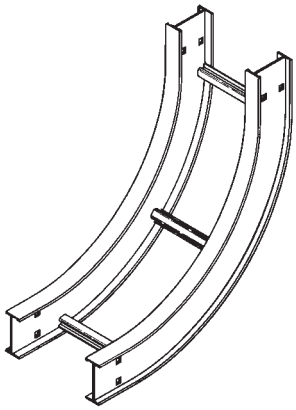

Fittings engineered with 3" tangents for splicing integrity.

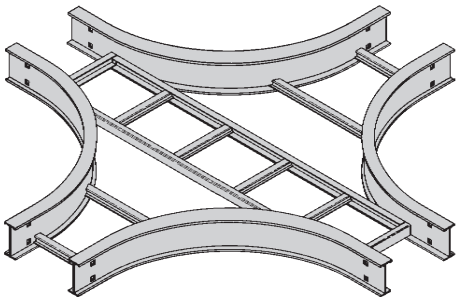

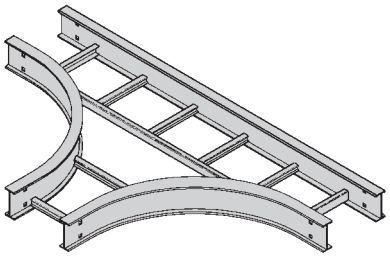

Fittings Part Numbering

Prefix Suffix

Example: **4 A - 24 - 90 HB 24** (9" rung spacing is standard)

Side Rail Height
- 4 = 4" (101)
- 5 = 5" (127)
- 6 = 6" (152)
- 7 = 7" (178)

Material
- A= Aluminum

Width
- 06 = 6" (152)
- 09 = 9" (228)
- 12 = 12" (305)
- 18 = 18" (457)
- 24 = 24" (609)
- 30 = 30" (762)
- 36 = 36" (914)

Angle
- 30 = 30°
- 45 = 45°
- 60 = 60°
- 90 = 90°

Type
- HB = Horizontal Bend
- HT = Horizontal Tee
- HX = Horizontal Cross
- VI = Vertical Inside Bend
- VO = Vertical Outside Bend
- VT = Vertical Tee
- VTU = Vertical Tee, Up
- HYR = Horizontal Wye, Right
- HYL = Horizontal Wye, Left
- CSF = Cable Support Fitting

Radius
- 12 = 12" (305)
- 24 = 24" (609)
- 36 = 36" (914)
- 48 = 48" (1219)

Aluminum

For ventilated trough, solid trough, ventilated bottom or solid bottom, add VT, ST, 04 or SB as shown below: Available 6" thru 36"

Prefix
4AVT - 24 - 90HB24
Vented Trough

Prefix
4AST - 24 - 90HB24
Non-Ventilated Trough

For flat non-ventilated: Available 6" and Wider

Prefix
5ASB - 24 - 90HB24
Non-Ventilated

Note: Horizontal crosses and tees 30" or wider, with a radius of 36" or larger, will be of two-piece construction.

Horizontal Bend 90° 60° (HB)

1 pair splice plates with hardware included.

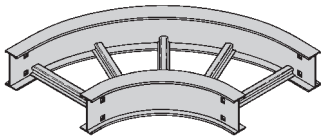

90˚ Horizontal Bend

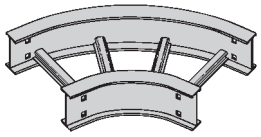

60˚ Horizontal Bend

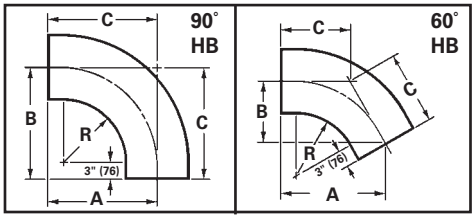

Bottoms manufactured:

Ladder = 9" Rung Spacing
VT & 04 = 4" Rung Spacing
ST & SB = Flat sheet over 12" Rung Spacing

Bend Radius R		Ladder Width		45˚ Horizontal Bend Dimensions							30˚ Horizontal Bend Dimensions						
				Catalog No.	A		B		C		Catalog No.	A		B		C	
in.	mm	in.	mm		in.	mm	in.	mm	in.	mm		in.	mm	in.	mm	in.	mm
12	305	6	152	(Pre)-06-90HB12	18	457	18	457	18	457	(Pre)-06-60HB12	17 1/2	445	10 1/8	257	11 11/16	297
		9	228	(Pre)-09-90HB12	19 1/2	495	19 1/2	495	19 1/2	495	(Pre)-09-60HB12	18 13/16	478	10 7/8	276	12 1/2	318
		12	305	(Pre)-12-90HB12	21	533	21	533	21	533	(Pre)-12-60HB12	20 1/16	510	11 5/8	295	13 3/8	340
		18	457	(Pre)-18-90HB12	24	610	24	610	24	610	(Pre)-18-60HB12	22 11/16	576	13 1/8	333	15 1/8	384
		24	609	(Pre)-24-90HB12	27	686	27	686	27	686	(Pre)-24-60HB12	25 5/16	643	14 5/8	372	16 7/8	429
		30	762	(Pre)-30-90HB12	30	762	30	762	30	762	(Pre)-30-60HB12	27 7/8	708	16 1/8	410	18 9/16	472
		36	914	(Pre)-36-90HB12	33	838	33	838	33	838	(Pre)-36-60HB12	30 1/2	775	17 5/8	448	20 5/16	516
		42	1218	(Pre)-42-90HB12	36	914	36	914	36	914	(Pre)-42-60HB12	33 1/16	840	19 1/8	486	22 1/16	560
24	610	6	152	(Pre)-06-90HB24	30	762	30	762	30	762	(Pre)-06-60HB24	27 7/8	708	16 1/8	410	18 9/16	472
		9	228	(Pre)-09-90HB24	31 1/2	800	31 1/2	800	31 1/2	800	(Pre)-09-60HB24	29 3/16	741	16 7/8	429	19 7/16	494
		12	305	(Pre)-12-90HB24	33	838	33	838	33	838	(Pre)-12-60HB24	30 1/2	775	17 5/8	448	20 5/16	516
		18	457	(Pre)-18-90HB24	36	914	36	914	36	914	(Pre)-18-60HB24	33 1/16	708	19 1/8	486	22 1/16	560
		24	609	(Pre)-24-90HB24	39	991	39	991	39	991	(Pre)-24-60HB24	35 11/16	907	20 5/8	524	23 13/16	605
		30	762	(Pre)-30-90HB24	42	1067	42	1067	42	1067	(Pre)-30-60HB24	38 1/4	972	22 1/8	564	25 1/2	648
		36	914	(Pre)-36-90HB24	45	1143	45	1143	45	1143	(Pre)-36-60HB24	40 7/8	1038	23 5/8	600	27 1/4	692
		42	1218	(Pre)-42-90HB24	48	1219	48	1219	48	1219	(Pre)-42-60HB24	43 1/2	1105	25 1/8	638	29	737
36	915	6	152	(Pre)-06-90HB36	42	1067	42	1067	42	1067	(Pre)-06-60HB36	38 1/4	971	22 1/8	562	25 1/2	648
		9	228	(Pre)-09-90HB36	43 1/2	1105	43 1/2	1105	43 1/2	1105	(Pre)-09-60HB36	39 9/16	1005	22 7/8	581	26 3/8	670
		12	305	(Pre)-12-90HB36	45	1143	45	1143	45	1143	(Pre)-12-60HB36	40 7/8	1038	23 5/8	600	27 1/4	692
		18	457	(Pre)-18-90HB36	48	1219	48	1219	48	1219	(Pre)-18-60HB36	43 1/2	1105	25 1/8	638	29	737
		24	609	(Pre)-24-90HB36	51	1295	51	1295	51	1295	(Pre)-24-60HB36	46 1/16	1170	26 5/8	676	30 11/16	780
		30	762	(Pre)-30-90HB36	54	1372	54	1375	54	1372	(Pre)-30-60HB36	48 1/16	1237	28 1/8	714	32 7/16	824
		36	914	(Pre)-36-90HB36	57	1448	57	1488	57	1448	(Pre)-36-60HB36	51 1/4	1302	29 5/8	753	34 3/16	869
		42	1218	(Pre)-42-90HB36	60	1524	60	1524	60	1524	(Pre)-42-60HB36	53 7/8	1368	31 1/8	791	35 15/16	913
48	1220	6	152	(Pre)-06-90HB48	54	1372	54	1372	54	1372	(Pre)-06-60HB48	48 1/16	1221	28 1/8	715	32 11/16	830
		9	228	(Pre)-09-90HB48	55 1/2	1410	55 1/2	1410	55 1/2	1410	(Pre)-09-60HB48	49 15/16	1268	28 7/8	734	33 5/16	846
		12	305	(Pre)-12-90HB48	57	1448	57	1448	57	1448	(Pre)-12-60HB48	51 1/4	1302	29 5/8	753	34 3/16	868
		18	457	(Pre)-18-90HB48	60	1524	60	1524	60	1524	(Pre)-18-60HB48	53 7/8	1368	31 1/8	791	35 15/16	913
		24	609	(Pre)-24-90HB48	63	1600	63	1600	63	1600	(Pre)-24-60HB48	56 7/16	1434	32 5/8	829	37 5/8	956
		30	762	(Pre)-30-90HB48	66	1676	66	1676	66	1676	(Pre)-30-60HB48	59 1/16	1500	34 1/8	867	39 3/8	1000
		36	914	(Pre)-36-90HB48	69	1753	69	1753	69	1753	(Pre)-36-60HB48	61 11/16	1567	35 5/8	905	41 1/8	1045
		42	1218	(Pre)-42-90HB48	72	1829	72	1829	72	1829	(Pre)-42-60HB48	64 1/4	1632	37 1/8	943	42 13/16	1087

(Pre) See page AL-49 for catalog number prefix.
Width dimensions are to inside wall. For aluminum fittings add 1.5 inches for total outside width.
Manufacturing tolerances apply to all dimensions.

Horizontal Bend 45° 30° (HB)

1 pair splice plates with hardware included.

Bottoms manufactured:

Ladder = 9" Rung Spacing
VT & 04 = 4" Rung Spacing
ST & SB = Flat sheet over 12" Rung Spacing

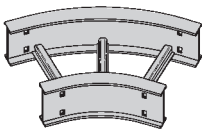

45˚ Horizontal Bend

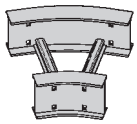

30˚ Horizontal Bend

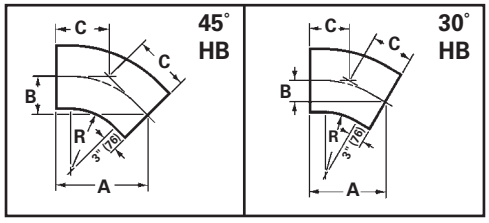

Bend Radius R in.	Bend Radius R mm	Ladder Width in.	Ladder Width mm	45˚ Horizontal Bend Dimensions Catalog No.	A in.	A mm	B in.	B mm	C in.	C mm	30˚ Horizontal Bend Dimensions Catalog No.	A in.	A mm	B in.	B mm	C in.	C mm
12	305	6	152	**(Pre)-06-45HB12**	15 3/4	400	6 1/2	165	9 3/16	233	**(Pre)-06-30HB12**	13 1/8	333	3 1/2	89	7	179
		9	228	**(Pre)-09-45HB12**	16 13/16	427	6 15/16	176	9 13/16	249	**(Pre)-09-30HB12**	13 7/8	352	3 11/16	94	7 7/16	189
		12	305	**(Pre)-12-45HB12**	17 7/8	454	7 3/8	187	10 7/16	265	**(Pre)-12-30HB12**	14 5/8	372	3 15/16	100	7 13/16	198
		18	457	**(Pre)-18-45HB12**	20	508	8 1/4	210	11 11/16	297	**(Pre)-18-30HB12**	16 1/8	410	4 5/16	135	8 5/8	219
		24	609	**(Pre)-24-45HB12**	22 1/16	560	9 1/8	232	12 15/16	329	**(Pre)-24-30HB12**	17 5/8	448	4 11/16	119	9 7/16	240
		30	762	**(Pre)-30-45HB12**	24 3/16	614	10	254	14 3/16	360	**(Pre)-30-30HB12**	19 1/8	486	5 1/8	130	10 1/4	260
		36	914	**(Pre)-36-45HB12**	26 5/16	668	10 15/16	278	15 7/16	392	**(Pre)-36-30HB12**	20 5/8	524	5 1/2	140	11 1/16	281
		42	1218	**(Pre)-42-45HB12**	28 7/16	722	11 13/16	300	16 11/16	424	**(Pre)-42-30HB12**	22 1/8	562	5 15/16	151	11 13/16	300
24	610	6	152	**(Pre)-06-45HB24**	24 3/16	614	10	254	14 3/16	360	**(Pre)-06-30HB24**	19 1/8	486	5 1/8	130	10 1/4	260
		9	228	**(Pre)-09-45HB24**	25 1/4	641	10 1/2	267	14 13/16	376	**(Pre)-09-30HB24**	19 7/8	505	5 5/16	135	10 5/8	270
		12	305	**(Pre)-12-45HB24**	26 5/16	668	10 15/16	278	15 7/16	392	**(Pre)-12-30HB24**	20 5/8	524	5 1/2	140	11 1/16	281
		18	457	**(Pre)-18-45HB24**	28 7/16	722	11 13/16	300	16 11/16	424	**(Pre)-18-30HB24**	22 1/8	562	5 15/16	151	11 13/16	300
		24	609	**(Pre)-24-45HB24**	30 9/16	766	12 11/16	322	17 15/16	456	**(Pre)-24-30HB24**	23 5/8	600	6 5/16	160	12 5/8	321
		30	762	**(Pre)-30-45HB24**	32 11/16	830	13 9/16	344	19 1/8	486	**(Pre)-30-30HB24**	25 1/8	638	6 3/4	172	13 7/16	341
		36	914	**(Pre)-36-45HB24**	34 13/16	884	14 7/16	367	20 3/8	518	**(Pre)-36-30HB24**	26 5/8	676	7 1/8	181	14 1/4	362
		42	1218	**(Pre)-42-45HB24**	36 15/16	938	15 5/16	389	21 5/8	549	**(Pre)-42-30HB24**	28 1/8	715	7 1/2	191	15 1/16	383
36	915	6	152	**(Pre)-06-45HB36**	32 11/16	830	13 9/16	344	19 1/8	486	**(Pre)-06-30HB36**	25 1/8	638	6 3/4	171	13 7/16	341
		9	228	**(Pre)-09-45HB36**	33 3/4	857	14	356	19 3/4	502	**(Pre)-09-30HB36**	25 7/8	657	6 15/16	176	13 7/8	352
		12	305	**(Pre)-12-45HB36**	34 13/16	884	14 7/16	367	20 3/8	518	**(Pre)-12-30HB36**	26 5/8	676	7 1/8	181	14 1/4	362
		18	457	**(Pre)-18-45HB36**	36 15/16	938	15 5/16	389	21 5/8	549	**(Pre)-18-30HB36**	28 1/8	114	7 1/2	191	15 1/16	383
		24	609	**(Pre)-24-45HB36**	39 1/6	992	16 3/16	411	22 7/8	581	**(Pre)-24-30HB36**	29 5/8	753	7 15/16	202	15 7/8	403
		30	762	**(Pre)-30-45HB36**	41 3/16	1046	17 1/16	433	24 1/8	613	**(Pre)-30-30HB36**	31 1/8	790	8 5/16	211	16 11/16	424
		36	914	**(Pre)-36-45HB36**	43 5/16	1100	17 15/16	456	25 3/8	645	**(Pre)-36-30HB36**	32 5/8	829	8 3/4	222	17 1/2	445
		42	1218	**(Pre)-42-45HB36**	45 7/16	1154	18 13/16	478	26 5/8	676	**(Pre)-42-30HB36**	34 1/8	867	9 1/8	232	18 1/4	464
48	1220	6	152	**(Pre)-06-45HB48**	41 3/16	1046	17 1/16	433	24 1/8	613	**(Pre)-06-30HB48**	31 1/8	791	8 5/16	211	16 11/16	424
		9	228	**(Pre)-09-45HB48**	42 1/4	1073	17 1/2	445	24 3/4	629	**(Pre)-09-30HB48**	31 7/8	810	8 9/16	218	17 1/16	433
		12	305	**(Pre)-12-45HB48**	43 5/16	1100	17 15/16	456	25 3/8	645	**(Pre)-12-30HB48**	32 5/8	829	8 3/4	222	17 1/2	445
		18	457	**(Pre)-18-45HB48**	45 7/16	1154	18 13/16	487	26 5/8	676	**(Pre)-18-30HB48**	34 1/8	867	9 1/8	232	18 1/4	464
		24	609	**(Pre)-24-45HB48**	47 9/16	1208	19 11/16	500	27 7/8	708	**(Pre)-24-30HB48**	35 5/8	905	9 9/16	243	19 1/16	484
		30	762	**(Pre)-30-45HB48**	49 11/16	1262	20 9/16	522	29 1/8	740	**(Pre)-30-30HB48**	37 1/8	943	9 15/16	252	19 7/8	505
		36	914	**(Pre)-36-45HB48**	51 13/16	1316	21 7/16	545	30 5/16	770	**(Pre)-36-30HB48**	38 5/8	981	10 5/16	262	20 11/16	525
		42	1218	**(Pre)-42-45HB48**	54 15/16	1395	22 5/16	567	31 9/16	802	**(Pre)-42-30HB48**	40 1/8	1019	10 3/4	273	21 1/2	546

(Pre) See page AL-49 for catalog number prefix.
Width dimensions are to inside wall. For aluminum fittings add 1.5 inches for total outside width.
Manufacturing tolerances apply to all dimensions.

Horizontal Tee (HT)

2 pair splice plates with hardware included.

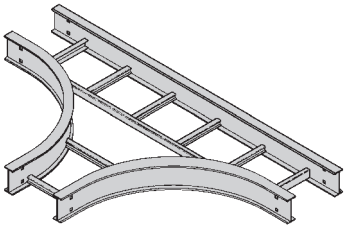

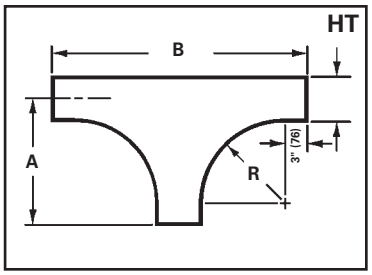

Horizontal Cross (HX)

3 pair splice plates with hardware included.

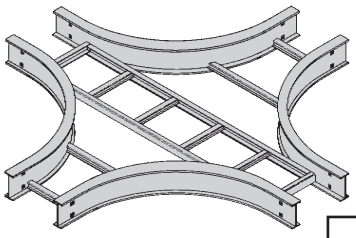

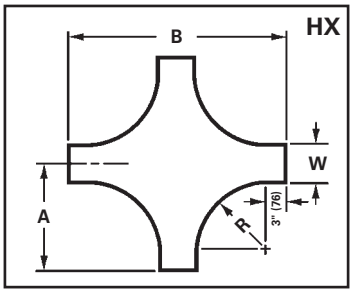

Bend Radius R		Ladder Width		Horizontal Tee Catalog Number	Horizontal Tee Dimensions A		Horizontal Tee Dimensions B		Horizontal Cross Catalog Number	Horizontal Cross Dimensions A		Horizontal Cross Dimensions B	
in.	mm	in.	mm		in.	mm	in.	mm		in.	mm	in.	mm
12	305	6	152	**(Prefix)-06-HT12**	18	457	36	914	**(Prefix)-06-HX12**	18	457	36	914
		9	229	**(Prefix)-09-HT12**	19 1/2	496	39	991	**(Prefix)-09-HX12**	19 1/2	496	39	991
		12	305	**(Prefix)-12-HT12**	21	533	42	1067	**(Prefix)-12-HX12**	21	533	42	1067
		18	457	**(Prefix)-18-HT12**	24	609	48	1219	**(Prefix)-18-HX12**	24	609	48	1219
		24	609	**(Prefix)-24-HT12**	27	686	54	1372	**(Prefix)-24-HX12**	27	686	54	1372
		30	762	**(Prefix)-30-HT12**	30	762	60	1524	**(Prefix)-30-HX12**	30	762	60	1524
		36	914	**(Prefix)-36-HT12**	33	838	66	1676	**(Prefix)-36-HX12**	33	838	66	1676
		42	1067	**(Prefix)-42-HT12**	36	914	72	1829	**(Prefix)-42-HX12**	36	914	72	1829
24	610	6	152	**(Prefix)-06-HT24**	30	762	60	1542	**(Prefix)-06-HX24**	30	762	60	1524
		9	229	**(Prefix)-09-HT24**	31 1/2	800	63	1600	**(Prefix)-09-HX24**	31 1/2	800	63	1600
		12	305	**(Prefix)-12-HT24**	33	838	66	1676	**(Prefix)-12-HX24**	33	838	66	1676
		18	457	**(Prefix)-18-HT24**	36	914	72	1828	**(Prefix)-18-HX24**	36	914	72	1828
		24	609	**(Prefix)-24-HT24**	39	991	78	1982	**(Prefix)-24-HX24**	39	991	78	1982
		30	762	**(Prefix)-30-HT24**	42	1067	84	2134	**(Prefix)-30-HX24**	42	1067	84	2134
		36	914	**(Prefix)-36-HT24**	45	1143	90	2286	**(Prefix)-36-HX24**	45	1143	90	2286
		42	1067	**(Prefix)-42-HT24**	48	1219	96	2438	**(Prefix)-42-HX24**	48	1219	96	2438
36	915	6	152	**(Prefix)-06-HT36**	42	1067	84	2134	**(Prefix)-06-HX36**	42	1067	84	2134
		9	229	**(Prefix)-09-HT36**	43 1/2	1105	87	2210	**(Prefix)-09-HX36**	43 1/2	1105	87	2210
		12	305	**(Prefix)-12-HT36**	45	1143	90	2286	**(Prefix)-12-HX36**	45	1143	90	2286
		18	457	**(Prefix)-18-HT36**	48	1219	96	2438	**(Prefix)-18-HX36**	48	1219	96	2438
		24	609	**(Prefix)-24-HT36**	51	1295	102	2590	**(Prefix)-24-HX36**	51	1295	102	2590
		30	762	**(Prefix)-30-HT36**	54	1372	108	2744	**(Prefix)-30-HX36**	54	1372	108	2744
		36	914	**(Prefix)-36-HT36**	57	1488	114	2896	**(Prefix)-36-HX36**	57	1448	114	2896
		42	1067	**(Prefix)-42-HT36**	60	1524	120	3048	**(Prefix)-42-HX36**	60	1524	120	3048
48	1220	6	152	**(Prefix)-06-HT48**	54	1372	108	2743	**(Prefix)-06-HX48**	54	1372	108	2743
		9	229	**(Prefix)-09-HT48**	55 1/2	1410	111	2820	**(Prefix)-09-HX48**	55 1/2	1410	111	2820
		12	305	**(Prefix)-12-HT48**	57	1448	114	2896	**(Prefix)-12-HX48**	57	1448	114	2896
		18	457	**(Prefix)-18-HT48**	60	1524	120	3048	**(Prefix)-18-HX48**	60	1524	120	3048
		24	609	**(Prefix)-24-HT48**	63	1600	126	3200	**(Prefix)-24-HX48**	63	1600	126	3200
		30	762	**(Prefix)-30-HT48**	66	1676	132	3353	**(Prefix)-30-HX48**	66	1676	132	3353
		36	914	**(Prefix)-36-HT48**	69	1753	138	3535	**(Prefix)-36-HX48**	69	1753	138	3505
		42	1067	**(Prefix)-42-HT48**	72	1829	144	3658	**(Prefix)-42-HX48**	72	1829	144	3658

(Prefix) See page AL-49 for catalog number prefix.
Width dimensions are to inside wall. For aluminum fittings add 1.5 inches for total outside width.
Manufacturing tolerances apply to all dimensions.

Vertical Bend 90˚ (VO, VI)

1 pair splice plates with hardware included.

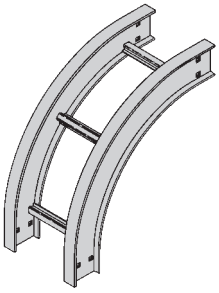

90˚ Vertical Outside

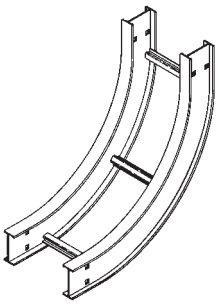

90˚ Vertical Inside

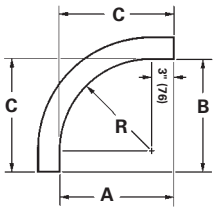

90˚ VO

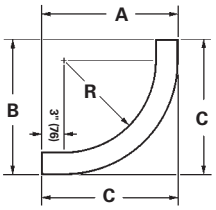

90˚ VI

Bend Radius R in.	Ladder Width in. (mm)	(*) Insert "VO" for Vert. Outside Bend Insert "VI" for Vert. Inside Bend Catalog No.	VO Side Rail Height 4" - 7" A in.	B in.	C in.	VI Side Rail Height 4" A in.	B in.	C in.	5" A in.	B in.	C in.	6" A in.	B in.	C in.	7" A in.	B in.	C in.
12 (305)	6 (152)	**(Prefix)-06-90(*)12**	15 (381)	15 (381)	15 (381)	19 (483)	19 (483)	19 (483)	20 (508)	20 (508)	20 (508)	21 (533)	21 (533)	21 (533)	22 (559)	22 (559)	22 (559)
	9 (228)	**(Prefix)-09-90(*)12**															
	12 (305)	**(Prefix)-12-90(*)12**															
	18 (457)	**(Prefix)-18-90(*)12**															
	24 (609)	**(Prefix)-24-90(*)12**															
	30 (762)	**(Prefix)-30-90(*)12**															
	36 (914)	**(Prefix)-36-90(*)12**															
	42 (1067)	**(Prefix)-42-90(*)12**															
24 (609)	6 (152)	**(Prefix)-06-90(*)24**	27 (686)	27 (686)	27 (686)	31 (787)	31 (787)	31 (787)	32 (813)	32 (813)	32 (813)	33 (838)	33 (838)	33 (838)	34 (864)	34 (864)	34 (864)
	9 (228)	**(Prefix)-09-90(*)24**															
	12 (305)	**(Prefix)-12-90(*)24**															
	18 (457)	**(Prefix)-18-90(*)24**															
	24 (609)	**(Prefix)-24-90(*)24**															
	30 (762)	**(Prefix)-30-90(*)24**															
	36 (914)	**(Prefix)-36-90(*)24**															
	42 (1067)	**(Prefix)-42-90(*)24**															
36 (914)	6 (152)	**(Prefix)-06-90(*)36**	39 (991)	39 (991)	39 (991)	43 (1092)	43 (1092)	43 (1092)	44 (1118)	44 (1118)	44 (1118)	45 (1143)	45 (1143)	45 (1143)	46 (1168)	46 (1168)	46 (1168)
	9 (228)	**(Prefix)-09-90(*)36**															
	12 (305)	**(Prefix)-12-90(*)36**															
	18 (457)	**(Prefix)-18-90(*)36**															
	24 (609)	**(Prefix)-24-90(*)36**															
	30 (762)	**(Prefix)-30-90(*)36**															
	36 (914)	**(Prefix)-36-90(*)36**															
	42 (1067)	**(Prefix)-42-90(*)36**															
48 (1219)	6 (152)	**(Prefix)-06-90(*)48**	51 (1295)	51 (1295)	51 (1295)	55 (1397)	55 (1397)	55 (1397)	56 (1422)	56 (1422)	56 (1422)	57 (1448)	57 (1448)	57 (1448)	58 (1473)	58 (1473)	58 (1473)
	9 (228)	**(Prefix)-09-90(*)48**															
	12 (305)	**(Prefix)-12-90(*)48**															
	18 (457)	**(Prefix)-18-90(*)48**															
	24 (609)	**(Prefix)-24-90(*)48**															
	30 (762)	**(Prefix)-30-90(*)48**															
	36 (914)	**(Prefix)-36-90(*)48**															
	42 (1067)	**(Prefix)-42-90(*)48**															

(Prefix) See page AL-49 for catalog number prefix.
Manufacturing tolerances apply to all dimensions.

Vertical Bend 60˚ (VO, VI)

1 pair splice plates with hardware included.

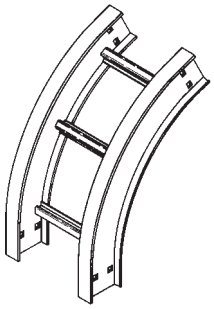

60˚ Vertical Outside

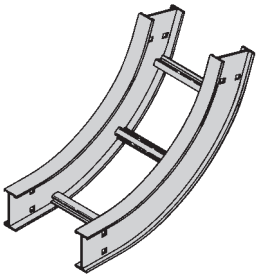

60˚ Vertical Inside

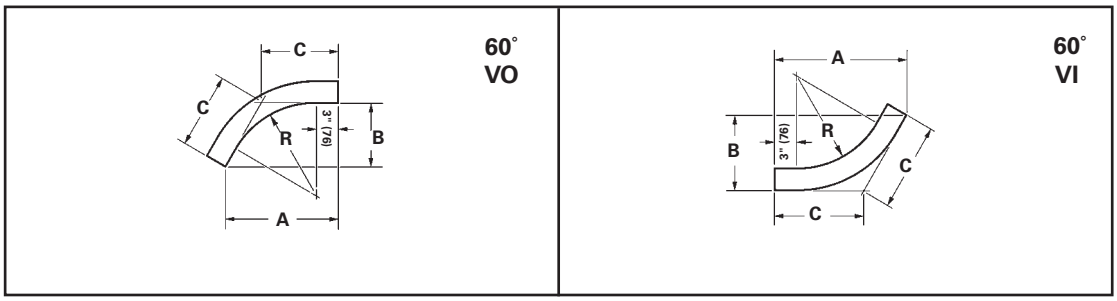

Bend Radius R in.	Ladder Width in. (mm)	(*) Insert "VO" for Vert. Outside Bend Insert "VI" for Vert. Inside Bend Catalog No.	VO Side Rail Height 4" - 7" A in.	B in.	C in.	VI Side Rail Height 4" A in.	B in.	C in.	5" A in.	B in.	C in.	6" A in.	B in.	C in.	7" A in.	B in.	C in.
12 (305)	6 (152)	**(Prefix)-06-60(*)12**	14 7/8 (378)	8 5/8 (219)	9 15/16 (253)	18 3/8 (467)	10 5/8 (270)	12 1/4 (311)	19 1/4 (489)	11 1/8 (283)	12 13/16 (326)	20 1/16 (510)	11 5/8 (296)	13 3/8 (340)	21 15/16 (557)	12 1/8 (308)	14 (356)
	9 (228)	**(Prefix)-09-60(*)12**															
	12 (305)	**(Prefix)-12-60(*)12**															
	18 (457)	**(Prefix)-18-60(*)12**															
	24 (609)	**(Prefix)-24-60(*)12**															
	30 (762)	**(Prefix)-30-60(*)12**															
	36 (914)	**(Prefix)-36-60(*)12**															
	42 (1067)	**(Prefix)-42-60(*)12**															
24 (609)	6 (152)	**(Prefix)-06-60(*)24**	25 5/16 (643)	14 5/8 (372)	16 7/8 (428)	28 3/4 (730)	16 5/8 (422)	19 3/16 (488)	29 5/8 (753)	17 1/8 (435)	19 3/4 (502)	30 1/2 (775)	17 5/8 (448)	20 5/16 (516)	31 3/8 (797)	18 1/8 (461)	20 7/8 (530)
	9 (228)	**(Prefix)-09-60(*)24**															
	12 (305)	**(Prefix)-12-60(*)24**															
	18 (457)	**(Prefix)-18-60(*)24**															
	24 (609)	**(Prefix)-24-60(*)24**															
	30 (762)	**(Prefix)-30-60(*)24**															
	36 (914)	**(Prefix)-36-60(*)24**															
	42 (1067)	**(Prefix)-42-60(*)24**															
36 (914)	6 (152)	**(Prefix)-06-60(*)36**	35 11/16 (907)	20 5/8 (524)	23 13/16 (605)	39 1/8 (994)	22 5/8 (575)	26 1/8 (663)	40 (1016)	23 1/8 (587)	26 11/16 (687)	40 7/8 (1038)	23 5/8 (600)	27 1/4 (692)	41 3/4 (1060)	24 1/8 (613)	27 13/16 (706)
	9 (228)	**(Prefix)-09-60(*)36**															
	12 (305)	**(Prefix)-12-60(*)36**															
	18 (457)	**(Prefix)-18-60(*)36**															
	24 (609)	**(Prefix)-24-60(*)36**															
	30 (762)	**(Prefix)-30-60(*)36**															
	36 (914)	**(Prefix)-36-60(*)36**															
	42 (1067)	**(Prefix)-42-60(*)36**															
48 (1219)	6 (152)	**(Prefix)-06-60(*)48**	46 1/16 (1170)	26 5/8 (676)	30 11/16 (780)	49 9/16 (1259)	28 5/8 (727)	33 (838)	50 3/8 (1280)	29 1/8 (740)	33 5/8 (854)	51 1/4 (1302)	29 5/8 (753)	34 3/16 (868)	52 1/8 (1324)	30 1/8 (765)	34 3/4 (883)
	9 (228)	**(Prefix)-09-60(*)48**															
	12 (305)	**(Prefix)-12-60(*)48**															
	18 (457)	**(Prefix)-18-60(*)48**															
	24 (609)	**(Prefix)-24-60(*)48**															
	30 (762)	**(Prefix)-30-60(*)48**															
	36 (914)	**(Prefix)-36-60(*)48**															
	42 (1067)	**(Prefix)-42-60(*)48**															

(Prefix) See page AL-49 for catalog number prefix.
Manufacturing tolerances apply to all dimensions.

Vertical Bend 45˚ (VO, VI)

1 pair splice plates with hardware included.

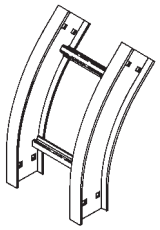

45˚ Vertical Outside

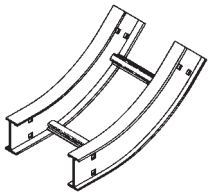

45˚ Vertical Inside

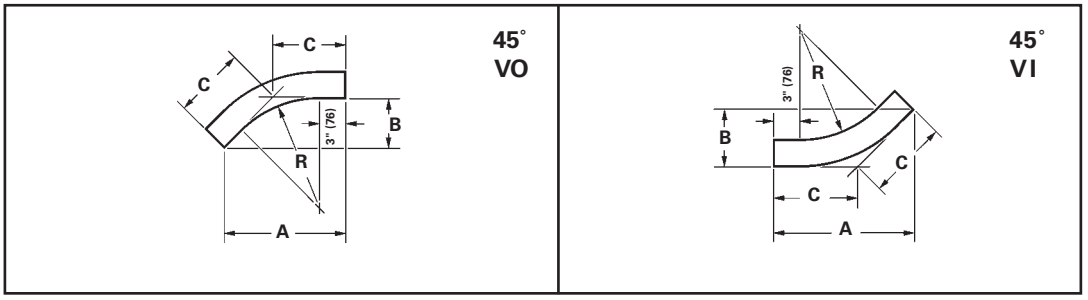

Bend Radius R in.	Ladder Width in. (mm)	(*) Insert "VO" for Vert. Outside Bend Insert "VI" for Vert. Inside Bend Catalog No.	VO Side Rail Height 4" - 7" A in.	B in.	C in.	VI Side Rail Height 4" A in.	B in.	C in.	5" A in.	B in.	C in.	6" A in.	B in.	C in.	7" A in.	B in.	C in.
12 (305)	6 (152)	**(Prefix)-06-45(*)12**	13 5/8 (346)	5 5/8 (143)	8 (203)	16 7/16 (417)	6 13/16 (173)	9 5/8 (245)	17 1/8 (435)	7 1/8 (181)	10 1/16 (256)	17 7/8 (454)	7 3/8 (188)	10 7/16 (265)	18 9/16 (471)	7 11/16 (195)	10 7/8 (2176)
	9 (228)	**(Prefix)-09-45(*)12**															
	12 (305)	**(Prefix)-12-45(*)12**															
	18 (457)	**(Prefix)-18-45(*)12**															
	24 (609)	**(Prefix)-24-45(*)12**															
	30 (762)	**(Prefix)-30-45(*)12**															
	36 (914)	**(Prefix)-36-45(*)12**															
	42 (1067)	**(Prefix)-42-45(*)12**															
24 (609)	6 (152)	**(Prefix)-06-45(*)24**	22 1/16 (561)	9 1/8 (232)	12 15/16 (329)	24 15/16 (634)	10 5/16 (262)	14 5/8 (372)	25 5/8 (651)	10 5/8 (270)	15 (381)	26 5/16 (668)	10 15/16 (278)	15 7/16 (392)	27 1/16 (687)	11 3/16 (284)	15 13/16 (402)
	9 (228)	**(Prefix)-09-45(*)24**															
	12 (305)	**(Prefix)-12-45(*)24**															
	18 (457)	**(Prefix)-18-45(*)24**															
	24 (609)	**(Prefix)-24-45(*)24**															
	30 (762)	**(Prefix)-30-45(*)24**															
	36 (914)	**(Prefix)-36-45(*)24**															
	42 (1067)	**(Prefix)-42-45(*)24**															
36 (914)	6 (152)	**(Prefix)-06-45(*)36**	30 9/16 (776)	12 11/16 (323)	17 15/16 (456)	33 3/8 (848)	13 13/16 (351)	19 9/16 (497)	34 1/8 (867)	14 1/8 (359)	20 (508)	34 13/16 (885)	14 7/16 (367)	20 3/8 (518)	35 1/2 (902)	14 11/16 (373)	20 13/16 (528)
	9 (228)	**(Prefix)-09-45(*)36**															
	12 (305)	**(Prefix)-12-45(*)36**															
	18 (457)	**(Prefix)-18-45(*)36**															
	24 (609)	**(Prefix)-24-45(*)36**															
	30 (762)	**(Prefix)-30-45(*)36**															
	36 (914)	**(Prefix)-36-45(*)36**															
	42 (1067)	**(Prefix)-42-45(*)36**															
48 (1219)	6 (152)	**(Prefix)-06-45(*)48**	39 1/16 (992)	16 3/16 (411)	22 7/8 (581)	41 7/8 (1064)	17 3/8 (441)	24 9/16 (624)	42 5/8 (1083)	17 5/8 (448)	24 15/16 (633)	43 5/16 (1100)	17 15/16 (456)	25 3/8 (645)	44 (1118)	18 1/4 (464)	25 13/16 (656)
	9 (228)	**(Prefix)-09-45(*)48**															
	12 (305)	**(Prefix)-12-45(*)48**															
	18 (457)	**(Prefix)-18-45(*)48**															
	24 (609)	**(Prefix)-24-45(*)48**															
	30 (762)	**(Prefix)-30-45(*)48**															
	36 (914)	**(Prefix)-36-45(*)48**															
	42 (1067)	**(Prefix)-42-45(*)48**															

(Prefix) See page AL-49 for catalog number prefix.
Manufacturing tolerances apply to all dimensions.

Vertical Bend 30˚ (VO, VI)

1 pair splice plates with hardware included.

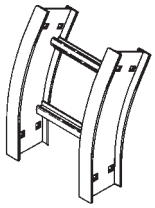

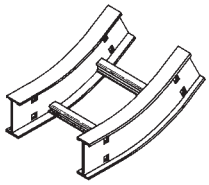

30˚ Vertical Outside

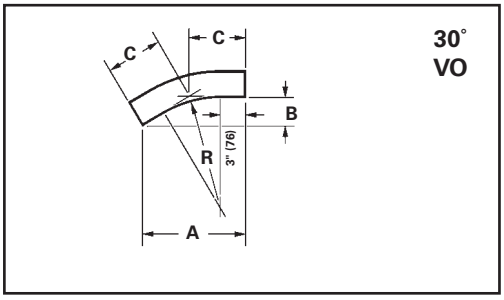

30˚ Vertical Inside

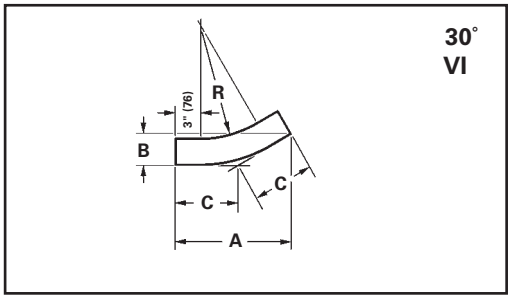

Bend Radius R	Ladder Width	(*) Insert "VO" for Vert. Outside Bend Insert "VI" for Vert. Inside Bend	VO Side Rail Height 4" - 7"			VI Side Rail Height											
						4"			5"			6"			7"		
			A	B	C	A	B	C	A	B	C	A	B	C	A	B	C
in.	in. (mm)	Catalog No.	in.	in.	in.	in.	in.	in.	in.	in.	in.	in.	in.	in.	in.	in.	in.
12 (305)	6 (152)	(Prefix)-06-30(*)12	$11\frac{5}{8}$ (296)	$3\frac{1}{8}$ (79)	$6\frac{3}{16}$ (157)	$13\frac{5}{8}$ (346)	$3\frac{5}{8}$ (92)	$7\frac{5}{16}$ (186)	$14\frac{1}{8}$ (359)	$3\frac{3}{4}$ (95)	$7\frac{9}{16}$ (192)	$14\frac{5}{8}$ (372)	$3\frac{15}{16}$ (100)	$7\frac{13}{16}$ (199)	$15\frac{1}{8}$ (384)	$4\frac{1}{16}$ (103)	$8\frac{1}{16}$ (205)
	9 (228)	(Prefix)-09-30(*)12															
	12 (305)	(Prefix)-12-30(*)12															
	18 (457)	(Prefix)-18-30(*)12															
	24 (609)	(Prefix)-24-30(*)12															
	30 (762)	(Prefix)-30-30(*)12															
	36 (914)	(Prefix)-36-30(*)12															
	42 (1067)	(Prefix)-42-30(*)12															
24 (609)	6 (152)	(Prefix)-06-30(*)24	$17\frac{5}{8}$ (448)	$4\frac{11}{16}$ (120)	$9\frac{7}{16}$ (240)	$19\frac{5}{8}$ (499)	$5\frac{1}{4}$ (133)	$10\frac{1}{2}$ (267)	$20\frac{1}{8}$ (511	$5\frac{3}{8}$ (137)	$10\frac{3}{4}$ (273)	$20\frac{5}{8}$ (524)	$5\frac{1}{2}$ (140)	$11\frac{1}{16}$ (282)	$21\frac{1}{8}$ (537)	$5\frac{5}{8}$ (143)	$11\frac{5}{16}$ (287)
	9 (228)	(Prefix)-09-30(*)24															
	12 (305)	(Prefix)-12-30(*)24															
	18 (457)	(Prefix)-18-30(*)24															
	24 (609)	(Prefix)-24-30(*)24															
	30 (762)	(Prefix)-30-30(*)24															
	36 (914)	(Prefix)-36-30(*)24															
	42 (1067)	(Prefix)-42-30(*)24															
36 (914)	6 (152)	(Prefix)-06-30(*)36	$23\frac{5}{8}$ (600)	$6\frac{5}{16}$ (160)	$12\frac{5}{8}$ (321)	$25\frac{5}{8}$ (651)	$6\frac{7}{8}$ (174)	$13\frac{11}{16}$ (348)	$26\frac{1}{8}$ (663)	7 (175)	14 (356)	$26\frac{5}{8}$ (676)	$7\frac{1}{8}$ (181)	$14\frac{1}{4}$ (362)	$27\frac{1}{8}$ (689)	$7\frac{1}{4}$ (184)	$14\frac{1}{2}$ (287)
	9 (228)	(Prefix)-09-30(*)36															
	12 (305)	(Prefix)-12-30(*)36															
	18 (457)	(Prefix)-18-30(*)36															
	24 (609)	(Prefix)-24-30(*)36															
	30 (762)	(Prefix)-30-30(*)36															
	36 (914)	(Prefix)-36-30(*)36															
	42 (1067)	(Prefix)-42-30(*)36															
48 (1219)	6 (152)	(Prefix)-06-30(*)48	$29\frac{5}{8}$ (753)	$7\frac{15}{16}$ (202)	$15\frac{7}{8}$ (403)	$31\frac{5}{8}$ (803)	$8\frac{7}{16}$ (214)	$16\frac{15}{16}$ (430)	$32\frac{1}{8}$ (816)	$8\frac{5}{8}$ (219)	$17\frac{3}{16}$ (437)	$32\frac{5}{8}$ (829)	$8\frac{3}{4}$ (222)	$17\frac{1}{2}$ (445)	$33\frac{1}{8}$ (842)	$8\frac{7}{8}$ (226)	$17\frac{3}{4}$ (451)
	9 (228)	(Prefix)-09-30(*)48															
	12 (305)	(Prefix)-12-30(*)48															
	18 (457)	(Prefix)-18-30(*)48															
	24 (609)	(Prefix)-24-30(*)48															
	30 (762)	(Prefix)-30-30(*)48															
	36 (914)	(Prefix)-36-30(*)48															
	42 (1067)	(Prefix)-42-30(*)48															

(Prefix) See page AL-49 for catalog number prefix.
Manufacturing tolerances apply to all dimensions.

Vertical Tee Up/Down (VTU/VT)

2 pair splice plates with hardware included.

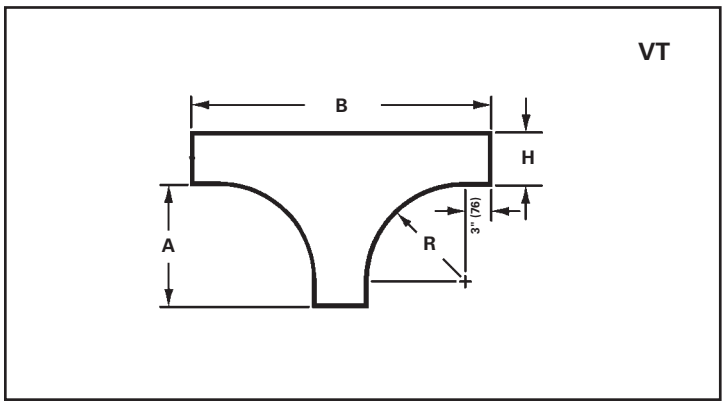

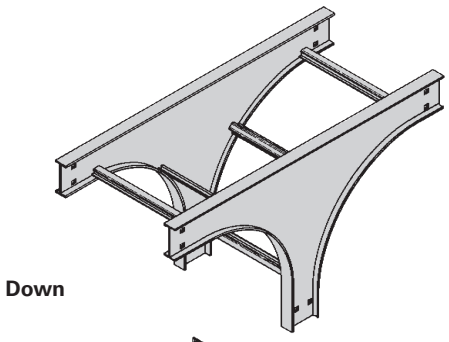

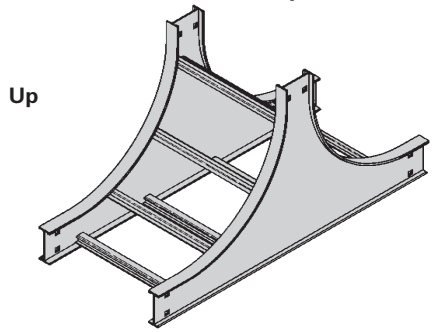

Bend Radius R in.	Ladder Width in. (mm)	Vertical Tee Down Catalog No.	Vertical Tee Up Catalog No.	Side Rail Height "H" 4" A in.	4" B in.	5" A in.	5" B in.	6" A in.	6" B in.	7" A in.	7" B in.
12 (305)	6 (152)	(Prefix)-06-VT12	(Prefix)-06-VTU12	15 (381)	34 (846)	15 (381)	35 (889)	15 (381)	36 (914)	15 (381)	37 (940)
	9 (228)	(Prefix)-09-VT12	(Prefix)-09-VTU12								
	12 (305)	(Prefix)-12-VT12	(Prefix)-12-VTU12								
	18 (457)	(Prefix)-18-VT12	(Prefix)-18-VTU12								
	24 (609)	(Prefix)-24-VT12	(Prefix)-24-VTU12								
	30 (762)	(Prefix)-30-VT12	(Prefix)-30-VTU12								
	36 (914)	(Prefix)-36-VT12	(Prefix)-36-VTU12								
	42 (1067)	(Prefix)-42-VT12	(Prefix)-42-VTU12								
24 (609)	6 (152)	(Prefix)-06-VT24	(Prefix)-06-VTU24	27 (6867)	58 (1473)	27 (686)	59 (1498)	27 (686)	60 (1524)	27 (686)	61 (1549)
	9 (228)	(Prefix)-09-VT24	(Prefix)-09-VTU24								
	12 (305)	(Prefix)-12-VT24	(Prefix)-12-VTU24								
	18 (457)	(Prefix)-18-VT24	(Prefix)-18-VTU24								
	24 (609)	(Prefix)-24-VT24	(Prefix)-24-VTU24								
	30 (762)	(Prefix)-30-VT24	(Prefix)-30-VTU24								
	36 (914)	(Prefix)-36-VT24	(Prefix)-36-VTU24								
	42 (1067)	(Prefix)-42-VT24	(Prefix)-42-VTU24								
36 (914)	6 (152)	(Prefix)-06-VT36	(Prefix)-06-VTU36	39 (991)	82 (2083)	39 (991)	83 (2108)	39 (991)	84 (2134)	39 (991)	85 (2159)
	9 (228)	(Prefix)-09-VT36	(Prefix)-09-VTU36								
	12 (305)	(Prefix)-12-VT36	(Prefix)-12-VTU36								
	18 (457)	(Prefix)-18-VT36	(Prefix)-18-VTU36								
	24 (609)	(Prefix)-24-VT36	(Prefix)-24-VTU36								
	30 (762)	(Prefix)-30-VT36	(Prefix)-30-VTU36								
	36 (914)	(Prefix)-36-VT36	(Prefix)-36-VTU36								
	42 (1067)	(Prefix)-42-VT36	(Prefix)-42-VTU36								
48 (1219)	6 (152)	(Prefix)-06-VT48	(Prefix)-06-VTU48	51 (1295)	106 (2692)	51 (1295)	107 (2718)	51 (1295)	108 (2743)	51 (1295)	109 (2769)
	9 (228)	(Prefix)-09-VT48	(Prefix)-09-VTU48								
	12 (305)	(Prefix)-12-VT48	(Prefix)-12-VTU48								
	18 (457)	(Prefix)-18-VT48	(Prefix)-18-VTU48								
	24 (609)	(Prefix)-24-VT48	(Prefix)-24-VTU48								
	30 (762)	(Prefix)-30-VT48	(Prefix)-30-VTU48								
	36 (914)	(Prefix)-36-VT48	(Prefix)-36-VTU48								
	42 (1067)	(Prefix)-42-VT48	(Prefix)-42-VTU48								

(Prefix) See page AL-49 for catalog number prefix.
Manufacturing tolerances apply to all dimensions.

Horizontal Wye (HYL, HYR)

2 pair splice plates with hardware included.

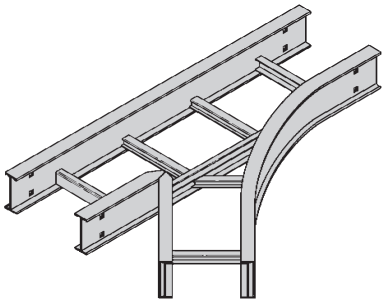

Left Hand Wye

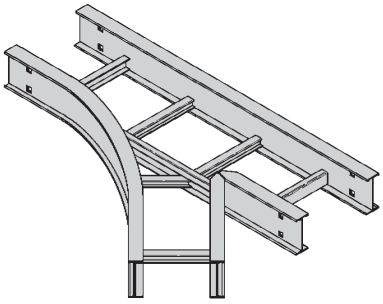

Right Hand Wye

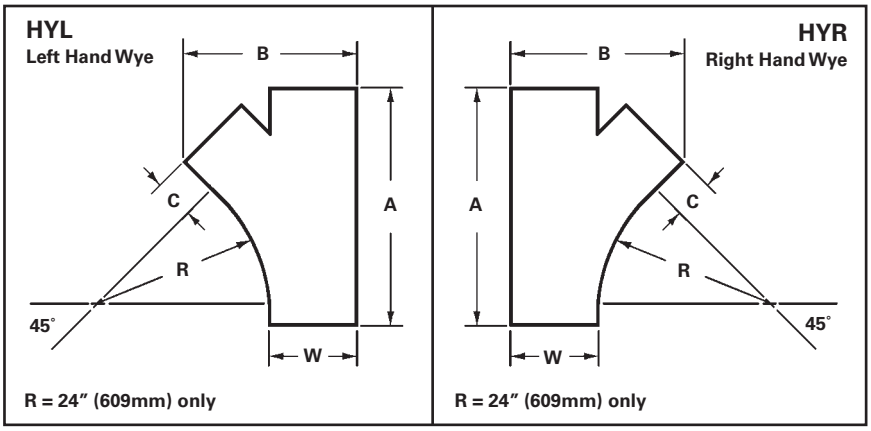

Bend Radius in.	(mm)	Ladder Width in.	(mm)	Left Hand Wye Catalog No.	Right Hand Wye Catalog No.	A in.	(mm)	B in.	(mm)	C in.	(mm)
24	(609)	6	152	**(Prefix)-06-HYL**	**(Prefix)-06-HYR**	28 7/16	722	15 3/16	386	3 1/16	77
		9	228	**(Prefix)-09-HYL**	**(Prefix)-09-HYR**	32 11/16	831	20 5/16	516	6 1/16	154
		12	305	**(Prefix)-12-HYL**	**(Prefix)-12-HYR**	36 15/16	938	25 7/16	646	9 1/16	231
		18	457	**(Prefix)-18-HYL**	**(Prefix)-18-HYR**	45 3/8	1153	35 15/16	910	15 1/16	383
		24	609	**(Prefix)-24-HYL**	**(Prefix)-24-HYR**	53 7/8	1368	45 15/16	1167	21 1/16	535
		30	762	**(Prefix)-30-HYL**	**(Prefix)-30-HYR**	62 3/8	1585	56 3/16	1427	27 1/16	688
		36	914	**(Prefix)-36-HYL**	**(Prefix)-36-HYR**	70 7/8	1800	66 7/16	1687	33 1/16	993
		42	1067	**(Prefix)-42-HYL**	**(Prefix)-42-HYR**	79 3/8	2016	76 5/8	1946	39 1/16	992

(Prefix) See page AL-49 for catalog number prefix.
Width dimensions are to inside wall. For aluminum fittings add 1.5 inches for total outside width.
Manufacturing tolerances apply to all dimensions.

Cable Support Fittings (CSF)

1 pair splice plates with hardware included.

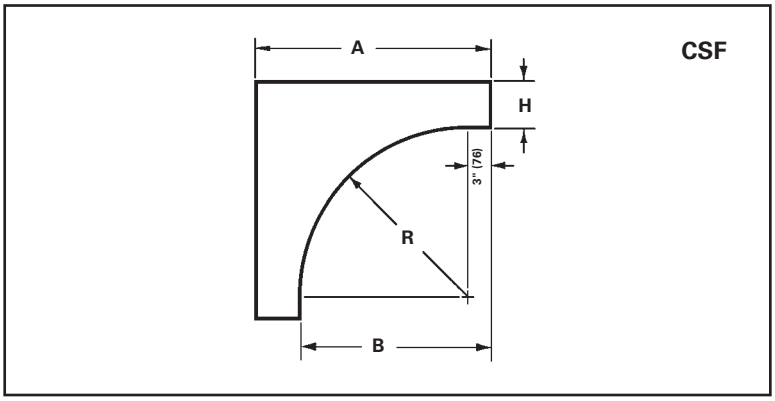

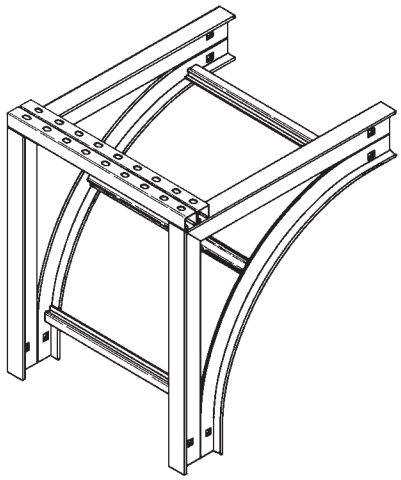

This fitting is recommended for use at the top of vertical runs to support the weight of the cables. The top cross brace is drilled for installing eyebolts, ordered separately.

Bend Radius R in.	Ladder Width in.	Ladder Width (mm)	Catalog No.	Side Rail Height "H" 4" A in.	4" B in.	5" A in.	5" B in.	6" A in.	6" B in.	7" A in.	7" B in.
12 (305)	6	(152)	**(Prefix)-06-CSF12**	19 (483)	15 (381)	20 (508)	15 (381)	21 (533)	15 (381)	22 (559)	15 (381)
	9	(228)	**(Prefix)-09-CSF12**								
	12	(305)	**(Prefix)-12-CSF12**								
	18	(457)	**(Prefix)-18-CSF12**								
	24	(609)	**(Prefix)-24-CSF12**								
	30	(762)	**(Prefix)-30-CSF12**								
	36	(914)	**(Prefix)-36-CSF12**								
	42	(1067)	**(Prefix)-42-CSF12**								
24 (609)	6	(152)	**(Prefix)-06-CSF24**	31 (787)	27 (686)	32 (813)	27 (686)	33 (838)	27 (686)	34 (864)	27 (686)
	9	(228)	**(Prefix)-09-CSF24**								
	12	(305)	**(Prefix)-12-CSF24**								
	18	(457)	**(Prefix)-18-CSF24**								
	24	(609)	**(Prefix)-24-CSF24**								
	30	(762)	**(Prefix)-30-CSF24**								
	36	(914)	**(Prefix)-36-CSF24**								
	42	(1067)	**(Prefix)-42-CSF24**								
36 (914)	6	(152)	**(Prefix)-06-CSF36**	43 (1092)	39 (991)	44 (1118)	39 (991)	45 (1143)	39 (991)	46 (1168)	39 (991)
	9	(228)	**(Prefix)-09-CSF36**								
	12	(305)	**(Prefix)-12-CSF36**								
	18	(457)	**(Prefix)-18-CSF36**								
	24	(609)	**(Prefix)-24-CSF36**								
	30	(762)	**(Prefix)-30-CSF36**								
	36	(914)	**(Prefix)-36-CSF36**								
	42	(1067)	**(Prefix)-42-CSF36**								
48 (1219)	6	(152)	**(Prefix)-06-CSF48**	55 (1397)	51 (1295)	56 (1422)	51 (1295)	57 (1448)	51 (1295)	58 (1473)	51 (1295)
	9	(228)	**(Prefix)-09-CSF48**								
	12	(305)	**(Prefix)-12-CSF48**								
	18	(457)	**(Prefix)-18-CSF48**								
	24	(609)	**(Prefix)-24-CSF48**								
	30	(762)	**(Prefix)-30-CSF48**								
	36	(914)	**(Prefix)-36-CSF48**								
	42	(1067)	**(Prefix)-42-CSF48**								

(Prefix) See page AL-49 for catalog number prefix.
Manufacturing tolerances apply to all dimensions.

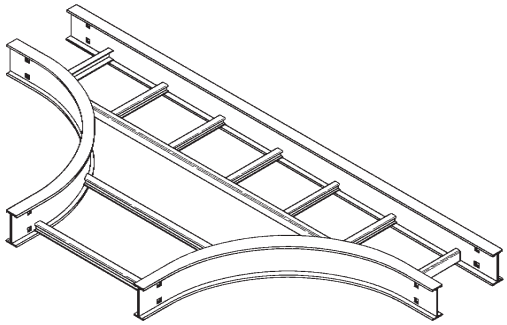

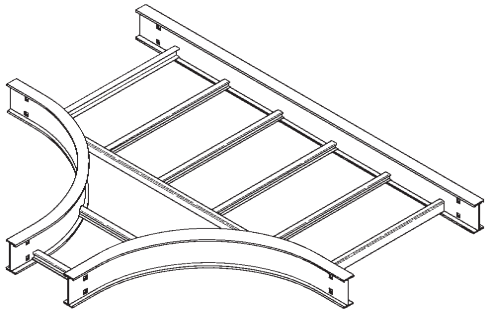

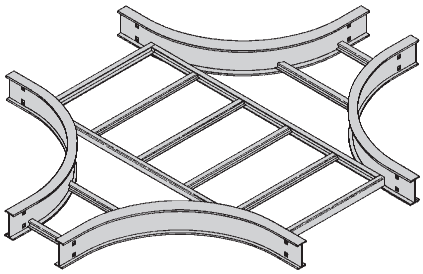

Fittings engineered with 3" tangents for splicing integrity.

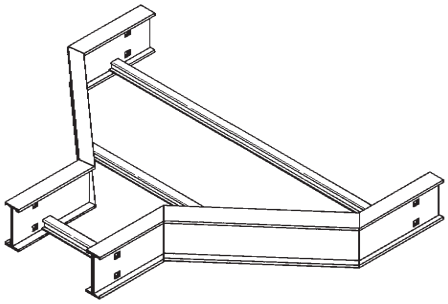

Reducer Fittings Part Numbering

Prefix Suffix

Example: **4 A - 24 - LR 12**

(9" rung spacing is standard)

Side Rail Height
4 = 4" (101)
5 = 5" (127)
6 = 6" (152)
7 = 7" (178)

Material
A= Aluminum

Width 1
09 = 9" (228)
12 = 12" (305)
18 = 18" (457)
24 = 24" (609)
30 = 30" (762)
36 = 36" (914)

Type
LR = Left Reducer Fitting
RR = Right Reducer Fitting
SR = Straight Reducer Fitting

Width 2
06 = 6" (152)
09 = 9" (228)
12 = 12" (305)
18 = 18" (457)
24 = 24" (609)
30 = 30" (762)

Expanding/Reducing Tee & Cross Fittings Part Numbering

Prefix Suffix

Example: **4 A - 24 - HT 12**

(9" rung spacing is standard)

Side Rail Height
4 = 4" (101)
5 = 5" (127)
6 = 6" (152)
7 = 7" (178)

Material
A= Aluminum

Width
06 = 6" (152)
09 = 9" (228)
12 = 12" (305)
18 = 18" (457)
24 = 24" (609)
30 = 30" (762)
36 = 36" (914)

Type
HT = Horizontal Tee Reducing
HT = Horizontal Tee Expanding
HX = Horizontal Cross Expanding/Reducing

Radius
12 = 12" (305)
24 = 24" (609)
36 = 36" (914)
48 = 48" (1219)

Note: Horizontal crosses and tees 30" or wider, with a radius of 36" or larger, will be of two-piece construction.

Reducers (LR, SR, RR)

1 pair splice plates with hardware included.

Reducer Part Numbering

Prefix - 24 - RR - 18

- 18 — $Width_2$
- RR — Fitting
- 24 — $Width_1$
- Prefix — Prefix

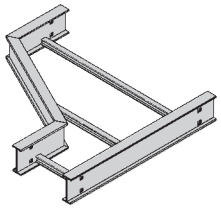

Left Reducer

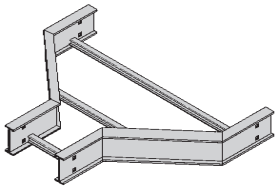

Straight Reducer

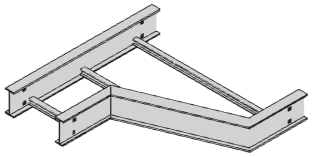

Right Reducer

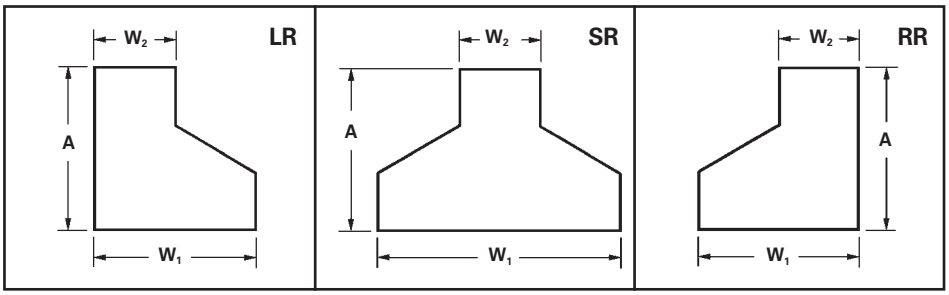

Ladder Width W1 in.	Ladder Width W1 mm	Ladder Width W2 in.	Ladder Width W2 mm	Left Hand Reducer Catalog No.	Left Hand Reducer A in.	Left Hand Reducer A mm	Straight Reducer Catalog No.	Straight Reducer A in.	Straight Reducer A mm	Right Hand Reducer Catalog No.	Right Hand Reducer A in.	Right Hand Reducer A mm
9	228	6	152	**(Prefix)-09-LR06**	9 3/4	248	**(Prefix)-09-SR06**	8 7/8	225	**(Prefix)-09-RR06**	9 3/4	248
12	305	6	152	**(Prefix)-12-LR06**	11 1/2	292	**(Prefix)-12-SR06**	9 3/4	248	**(Prefix)-12-RR06**	11 1/2	292
		9	228	**(Prefix)-12-LR09**	9 3/4	248	**(Prefix)-12-SR09**	8 7/8	225	**(Prefix)-12-RR09**	9 3/4	248
18	457	6	152	**(Prefix)-18-LR06**	14 15/16	379	**(Prefix)-18-SR06**	11 1/2	292	**(Prefix)-18-RR06**	14 15/16	379
		9	228	**(Prefix)-18-LR09**	13 3/16	340	**(Prefix)-18-SR09**	10 5/8	270	**(Prefix)-18-RR09**	13 3/16	340
		12	305	**(Prefix)-18-LR12**	11 1/2	292	**(Prefix)-18-SR12**	9 3/4	248	**(Prefix)-18-RR12**	11 1/2	292
24	609	6	152	**(Prefix)-24-LR06**	18 3/8	467	**(Prefix)-24-SR06**	13 3/16	340	**(Prefix)-24-RR06**	18 3/8	467
		9	228	**(Prefix)-24-LR09**	16 11/16	424	**(Prefix)-24-SR09**	12 3/8	314	**(Prefix)-24-RR09**	16 11/16	424
		12	305	**(Prefix)-24-LR12**	14 15/16	379	**(Prefix)-24-SR12**	11 1/2	292	**(Prefix)-24-RR12**	14 15/16	379
		18	457	**(Prefix)-24-LR18**	11 1/2	292	**(Prefix)-24-SR18**	9 3/4	248	**(Prefix)-24-RR18**	11 1/2	292
30	762	6	152	**(Prefix)-30-LR06**	21 7/8	555	**(Prefix)-30-SR06**	14 15/16	380	**(Prefix)-30-RR06**	21 7/8	555
		9	228	**(Prefix)-30-LR09**	20 1/8	511	**(Prefix)-30-SR09**	14 1/16	358	**(Prefix)-30-RR09**	20 1/8	511
		12	305	**(Prefix)-30-LR12**	18 3/8	462	**(Prefix)-30-SR12**	13 3/16	335	**(Prefix)-30-RR12**	18 3/8	462
		18	459	**(Prefix)-30-LR18**	14 15/16	380	**(Prefix)-30-SR18**	11 1/2	292	**(Prefix)-30-RR18**	14 15/16	380
		24	609	**(Prefix)-30-LR24**	11 1/2	292	**(Prefix)-30-SR24**	9 3/4	248	**(Prefix)-30-RR24**	11 1/2	292
36	914	6	152	**(Prefix)-36-LR06**	25 5/16	643	**(Prefix)-36-SR06**	16 11/16	424	**(Prefix)-36-RR06**	23 5/16	643
		9	228	**(Prefix)-36-LR09**	23 9/16	598	**(Prefix)-36-SR09**	15 13/16	402	**(Prefix)-36-RR09**	23 9/16	598
		12	305	**(Prefix)-36-LR12**	21 7/8	555	**(Prefix)-36-SR12**	14 15/16	380	**(Prefix)-36-RR12**	21 7/8	555
		18	457	**(Prefix)-36-LR18**	18 3/8	462	**(Prefix)-36-SR18**	13 3/16	335	**(Prefix)-36-RR18**	18 3/8	462
		24	609	**(Prefix)-36-LR24**	14 15/16	380	**(Prefix)-36-SR24**	11 1/2	292	**(Prefix)-36-RR24**	14 15/16	380
		30	762	**(Prefix)-36-LR30**	11 1/2	292	**(Prefix)-36-SR30**	9 3/4	248	**(Prefix)-36-RR30**	11 1/2	292
42	1067	6	152	**(Prefix)-42-LR06**	28 3/4	730	**(Prefix)-42-SR06**	18 3/8	467	**(Prefix)-42-RR06**	28 3/4	732
		9	228	**(Prefix)-42-LR09**	27 1/16	687	**(Prefix)-42-SR09**	17 1/2	445	**(Prefix)-42-RR09**	27 1/16	687
		12	305	**(Prefix)-42-LR12**	25 5/16	643	**(Prefix)-42-SR12**	16 11/16	424	**(Prefix)-42-RR12**	25 15/16	643
		18	457	**(Prefix)-42-LR18**	21 7/8	556	**(Prefix)-42-SR18**	14 15/16	379	**(Prefix)-42-RR18**	21 7/8	556
		24	609	**(Prefix)-42-LR24**	18 3/8	467	**(Prefix)-42-SR24**	13 3/16	335	**(Prefix)-42-RR24**	18 3/8	467
		30	762	**(Prefix)-42-LR30**	14 15/16	379	**(Prefix)-42-SR30**	11 1/2	292	**(Prefix)-42-RR30**	14 15/16	379
		36	914	**(Prefix)-42-LR36**	11 1/2	292	**(Prefix)-42-SR36**	9 3/4	249	**(Prefix)-42-RR36**	11 1/2	292

(Prefix) See page AL-60 for catalog number prefix.
Width dimensions are to inside wall. For aluminum fittings add 1.5 inches for total outside width.
Manufacturing tolerances apply to all dimensions.

Horizontal Reducing Tee (HT)

2 pair splice plates with hardware included.

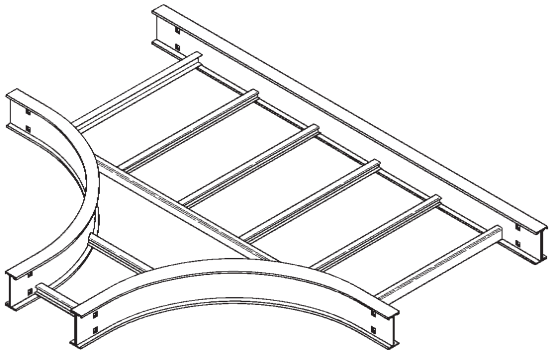

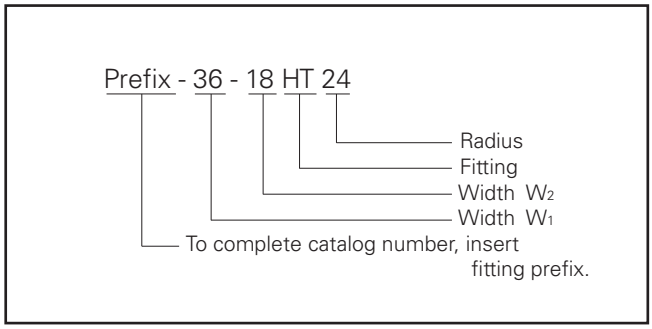

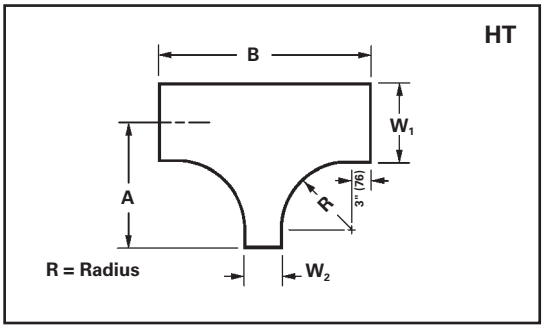

Ladder Width W1 in.	Ladder Width W1 mm	Ladder Width W2 in.	Ladder Width W2 mm	* Insert Radius (12", 24", 36", or 48") Catalog No.	12" Radius A in.	12" Radius A mm	12" Radius B in.	12" Radius B mm	24" Radius A in.	24" Radius A mm	24" Radius B in.	24" Radius B mm	36" Radius A in.	36" Radius A mm	36" Radius B in.	36" Radius B mm	48" Radius A in.	48" Radius A mm	48" Radius B in.	48" Radius B mm
9	228	6	152	**(Prefix)-09-06-HT***	19 1/2	496	36	914	31 1/2	800	60	1524	43	1092	84	2134	55 1/2	1410	108	2743
12	305	6	152	**(Prefix)-12-06-HT***	21	533	36	914	33	838	60	1524	45	1143	84	2134	57	1448	108	2743
		9	228	**(Prefix)-12-09-HT***	21	533	39	991	33	838	63	1600	45	1143	87	2210	57	1448	111	2819
18	475	6	152	**(Prefix)-18-06-HT***	24	609	36	914	36	914	60	1524	48	1219	84	2134	60	1524	108	2743
		9	228	**(Prefix)-18-09-HT***	24	609	39	991	36	914	63	1600	48	1219	87	2210	60	1524	111	2819
		12	305	**(Prefix)-18-12-HT***	24	609	42	1067	36	914	66	1676	48	1219	90	2286	60	1524	114	2496
24	609	6	152	**(Prefix)-24-06-HT***	27	686	36	914	39	991	60	1524	51	1295	84	2134	63	1600	108	2743
		9	228	**(Prefix)-24-09-HT***	27	686	39	991	39	991	63	1600	51	1295	87	2210	63	1600	111	2819
		12	305	**(Prefix)-24-12-HT***	27	686	42	1067	39	991	66	1676	51	1295	90	2286	63	1600	114	2496
		18	457	**(Prefix)-24-18-HT***	27	686	48	1219	39	991	72	1829	51	1295	96	2438	63	1600	120	3048
30	762	6	152	**(Prefix)-30-06-HT***	30	762	36	914	42	1067	60	1524	54	1372	84	2134	66	1676	108	2743
		9	228	**(Prefix)-30-09-HT***	30	762	39	991	42	1067	63	1600	54	1372	87	2210	66	1676	111	2819
		12	305	**(Prefix)-30-12-HT***	30	762	42	1067	42	1067	66	1676	54	1372	90	2286	66	1676	114	2496
		18	457	**(Prefix)-30-18-HT***	30	762	48	1219	42	1067	72	1829	54	1372	96	2438	66	1676	120	3048
		24	609	**(Prefix)-30-24-HT***	30	762	54	1372	42	1067	78	1981	54	1372	102	2591	66	1676	126	3200
36	914	6	152	**(Prefix)-36-06-HT***	33	838	36	914	45	1143	60	1524	57	1448	84	2134	69	1753	108	2743
		9	228	**(Prefix)-36-09-HT***	33	838	39	991	45	1143	63	1600	57	1448	87	2210	69	1753	111	2819
		12	305	**(Prefix)-36-12-HT***	33	838	42	1067	45	1143	66	1676	57	1448	90	2286	69	1753	114	2496
		18	457	**(Prefix)-36-18-HT***	33	838	48	1219	45	1143	72	1829	57	1448	96	2438	69	1753	120	3048
		24	609	**(Prefix)-36-24-HT***	33	838	54	1372	45	1143	78	1981	57	1448	102	2591	69	1753	126	3200
		30	762	**(Prefix)-36-30-HT***	33	838	60	1524	45	1143	84	2134	57	1448	108	2743	69	1753	132	3353
42	1067	6	152	**(Prefix)-42-06-HT***	36	914	36	914	48	1219	60	1524	60	1524	84	2134	72	1829	108	2743
		9	228	**(Prefix)-42-09-HT***	36	914	39	991	48	1219	63	1600	60	1524	87	2210	72	1829	111	2819
		12	305	**(Prefix)-42-12-HT***	36	914	42	1067	48	1219	66	1676	60	1524	90	2286	72	1829	114	2496
		18	457	**(Prefix)-42-18-HT***	36	914	48	1219	48	1219	72	1829	60	1524	96	2438	72	1829	120	3048
		24	609	**(Prefix)-42-24-HT***	36	914	54	1372	48	1219	78	1981	60	1524	102	2591	72	1829	126	3200
		30	762	**(Prefix)-42-30-HT***	36	914	60	1524	48	1219	84	2134	60	1524	108	2743	72	1829	132	3353
		36	914	**(Prefix)-42-36-HT***	36	914	66	1676	48	1219	90	2286	60	1524	114	2895	72	1829	138	3505

(Prefix) See page AL-60 for catalog number prefix.
Width dimensions are to inside wall. For aluminum fittings add 1.5 inches for total outside width.
Manufacturing tolerances apply to all dimensions.

Horizontal Expanding Tee (HT)

2 pair splice plates with hardware included.

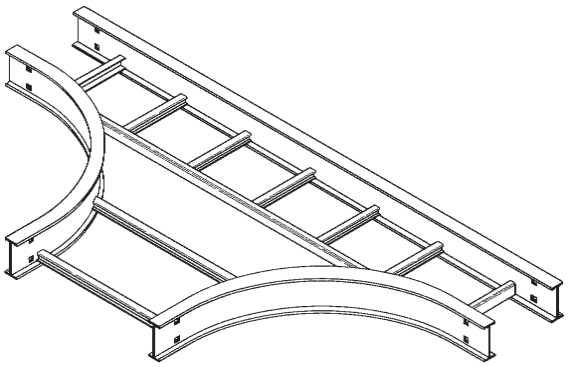

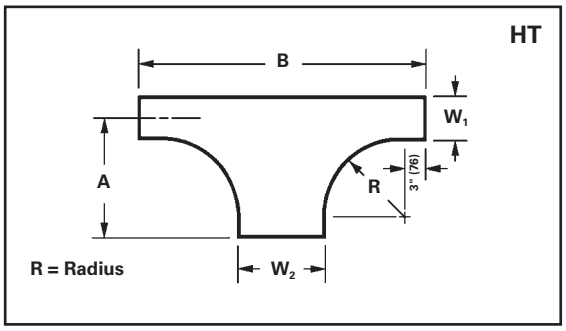

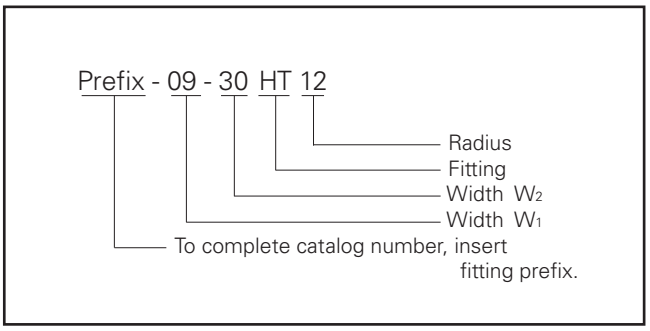

Ladder Width				* Insert Radius (12", 24", 36", or 48")	12" Radius				24" Radius				36" Radius				48" Radius			
W1		W2		Catalog No.	A		B		A		B		A		B		A		B	
in.	mm	in.	mm		in.	mm	in.	mm	in.	mm	in.	mm	in.	mm	in.	mm	in.	mm	in.	mm
6	152	9	228	**(Prefix)-06-09-HT***	18	457	39	991	30	762	63	1600	42	1067	87	2210	54	1372	111	2819
		12	305	**(Prefix)-06-12-HT***	18	457	42	1067	30	762	66	1676	42	1067	90	2286	54	1372	114	2496
		18	457	**(Prefix)-06-18-HT***	18	457	48	1219	30	762	72	1829	42	1067	96	2438	54	1372	120	3048
		24	609	**(Prefix)-06-24-HT***	18	457	54	1372	30	762	78	1981	42	1067	102	2591	54	1372	126	3200
		30	762	**(Prefix)-06-30-HT***	18	457	60	1524	30	762	84	2134	42	1067	108	2743	54	1372	132	3353
		36	914	**(Prefix)-06-36-HT***	18	457	66	1676	30	762	90	2286	42	1067	114	2895	54	1372	138	3503
		42	1067	**(Prefix)-06-42-HT***	18	457	72	1829	30	762	96	2438	42	1067	120	3048	54	1372	144	3658
9	228	12	305	**(Prefix)-09-12-HT***	19½	496	42	1067	31½	800	66	1676	43½	1105	90	2286	55½	1410	114	2496
		18	457	**(Prefix)-09-18-HT***	19½	496	48	1219	31½	800	72	1829	43½	1105	96	2438	55½	1410	120	3048
		24	609	**(Prefix)-09-24-HT***	19½	496	54	1372	31½	800	78	1981	43½	1105	102	2591	55½	1410	126	3200
		30	762	**(Prefix)-09-30-HT***	19½	496	60	1524	31½	800	84	2134	43½	1105	108	2743	55½	1410	132	3353
		36	914	**(Prefix)-09-36-HT***	19½	496	66	1676	31½	800	90	2286	43½	1105	114	2895	55½	1410	138	3503
		42	1067	**(Prefix)-09-42-HT***	19½	496	72	1829	31½	800	96	2438	43½	1105	120	3048	55½	1410	144	3658
12	305	18	457	**(Prefix)-12-18-HT***	21	533	48	1219	33	838	72	1829	45	1143	96	2438	57	1448	120	3048
		24	609	**(Prefix)-12-24-HT***	21	533	54	1372	33	838	78	1981	45	1143	102	2591	57	1448	126	3200
		30	762	**(Prefix)-12-30-HT***	21	533	60	1524	33	838	84	2134	45	1143	108	2743	57	1448	132	3353
		36	914	**(Prefix)-12-36-HT***	21	533	66	1676	33	838	90	2286	45	1143	114	2895	57	1448	138	3503
		42	1067	**(Prefix)-12-42-HT***	21	533	72	1829	33	838	96	2438	45	1143	120	3048	57	1448	144	3658
18	457	24	609	**(Prefix)-18-24-HT***	24	609	54	1372	36	914	78	1981	48	1219	102	2591	60	1524	126	3200
		30	762	**(Prefix)-18-30-HT***	24	609	60	1524	36	914	84	2134	48	1219	108	2743	60	1524	132	3353
		36	914	**(Prefix)-18-36-HT***	24	609	66	1676	36	914	90	2286	48	1219	114	2895	60	1524	138	3503
		42	1067	**(Prefix)-18-42-HT***	24	609	72	1829	36	914	96	2438	48	1219	120	3048	60	1524	144	3658
24	609	30	762	**(Prefix)-24-30-HT***	27	686	60	1524	39	991	84	2134	51	1295	108	2743	63	1600	132	3353
		36	914	**(Prefix)-24-36-HT***	27	686	66	1676	39	991	90	2286	51	1295	114	2895	63	1600	138	3503
		42	1067	**(Prefix)-24-42-HT***	27	686	72	1829	39	991	96	2438	51	1295	120	3048	63	1600	144	3658
30	762	36	914	**(Prefix)-30-36-HT***	30	762	66	1676	42	1067	90	2286	54	1372	114	2895	66	1676	138	3503
		42	1067	**(Prefix)-30-42-HT***	30	762	72	1829	42	1067	96	2438	54	1372	120	3048	66	1676	144	3658
36	914	42	1067	**(Prefix)-36-42-HT***	33	838	72	1829	45	1143	96	2438	57	1448	120	3048	69	1753	144	3658

(Prefix) See page AL-60 for catalog number prefix.
Width dimensions are to inside wall. For aluminum fittings add 1.5 inches for total outside width.
Manufacturing tolerances apply to all dimensions.

Horizontal Expanding/Reducing Cross (HX)

3 pair splice plates with hardware included.

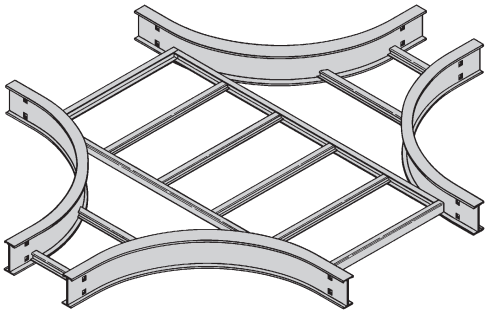

Prefix - 36 - 18 HX 24

- Radius
- Fitting
- Width W_2
- Width W_1
- To complete catalog number, insert fitting prefix.

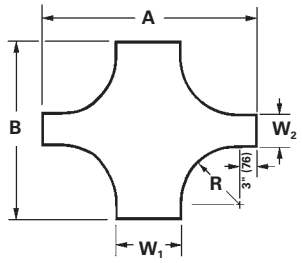

Ladder Width				* Insert Radius (12", 24", 36", or 48")	12" Radius				24" Radius				36" Radius				48" Radius			
W1		W2		Catalog No.	A		B		A		B		A		B		A		B	
in.	mm	in.	mm		in.	mm	in.	mm	in.	mm	in.	mm	in.	mm	in.	mm	in.	mm	in.	mm
9	228	6	152	**(Prefix)-09-06-HX***	39	991	36	914	63	1600	60	1372	87	2210	84	2134	111	2819	108	2743
12	305	6	152	**(Prefix)-12-06-HX***	42	1067	36	914	66	1676	60	1372	90	2286	84	2134	114	2896	108	2743
		9	228	**(Prefix)-12-09-HX***	42	1067	39	991	66	1676	63	1600	90	2286	87	2210	114	2896	111	2819
18	457	6	152	**(Prefix)-18-06-HX***	48	1219	36	914	72	1829	60	1372	96	2438	84	2134	120	3048	108	2743
		9	228	**(Prefix)-18-09-HX***	48	1219	39	991	72	1829	63	1600	96	2438	87	2210	120	3048	111	2819
		12	305	**(Prefix)-18-12-HX***	48	1219	42	1067	72	1829	66	1676	96	2438	90	2286	120	3048	114	2896
24	609	6	152	**(Prefix)-24-06-HX***	54	1372	36	914	78	1981	60	1372	102	2591	84	2134	126	3200	108	2743
		9	228	**(Prefix)-24-09-HX***	54	1372	39	991	78	1981	63	1600	102	2591	87	2210	126	3200	111	2819
		12	305	**(Prefix)-24-12-HX***	54	1372	42	1067	78	1981	66	1676	102	2591	90	2286	126	3200	114	2896
		18	457	**(Prefix)-24-18-HX***	54	1372	48	1219	78	1981	72	1829	102	2591	96	2438	126	3200	120	3048
30	762	6	152	**(Prefix)-30-06-HX***	60	1524	36	914	84	2134	60	1372	108	2743	84	2134	132	3353	108	2743
		9	228	**(Prefix)-30-09-HX***	60	1524	39	991	84	2134	63	1600	108	2743	87	2210	132	3353	111	2819
		12	305	**(Prefix)-30-12-HX***	60	1524	42	1067	84	2134	66	1676	108	2743	90	2286	132	3353	114	2896
		18	457	**(Prefix)-30-18-HX***	60	1524	48	1219	84	2134	72	1829	108	2743	96	2438	132	3353	120	3048
		24	609	**(Prefix)-30-24-HX***	60	1524	54	1372	84	2134	78	1981	108	2743	102	2591	132	3353	126	3200
36	914	6	152	**(Prefix)-36-06-HX***	66	1676	36	914	90	2286	60	1372	114	2896	84	2134	138	3505	108	2743
		9	228	**(Prefix)-36-09-HX***	66	1676	39	991	90	2286	63	1600	114	2896	87	2210	138	3505	111	2819
		12	305	**(Prefix)-36-12-HX***	66	1676	42	1067	90	2286	66	1676	114	2896	90	2286	138	3505	114	2896
		18	457	**(Prefix)-36-18-HX***	66	1676	48	1219	90	2286	72	1829	114	2896	96	2438	138	3505	120	3048
		24	609	**(Prefix)-36-24-HX***	66	1676	54	1372	90	2286	78	1981	114	2896	102	2591	138	3505	126	3200
		30	762	**(Prefix)-36-30-HX***	66	1676	60	1524	90	2286	84	2134	114	2896	108	2743	138	3505	132	3353
42	1067	6	152	**(Prefix)-42-06-HX***	72	1829	36	914	96	2438	60	1372	120	3048	84	2134	144	3658	108	2743
		9	228	**(Prefix)-42-09-HX***	72	1829	39	991	96	2438	63	1600	120	3048	87	2210	144	3658	111	2819
		12	305	**(Prefix)-42-12-HX***	72	1829	42	1067	96	2438	66	1676	120	3048	90	2286	144	3658	114	2896
		18	457	**(Prefix)-42-18-HX***	72	1829	48	1219	96	2438	72	1829	120	3048	96	2438	144	3658	120	3048
		24	609	**(Prefix)-42-24-HX***	72	1829	54	1372	96	2438	78	1981	120	3048	102	2591	144	3658	126	3200
		30	762	**(Prefix)-42-30-HX***	72	1829	60	1524	96	2438	84	2134	120	3048	108	2743	144	3658	132	3353
		36	914	**(Prefix)-42-36-HX***	72	1829	66	1676	96	2438	90	2286	120	3048	114	2896	144	3658	138	3505

(Prefix) See page AL-60 for catalog number prefix.
Width dimensions are to inside wall. For aluminum fittings add 1.5 inches for total outside width.
Manufacturing tolerances apply to all dimensions.

Straight Sections See pages GRP-3 & GRP-4
Straight Section Covers See page GRP-19

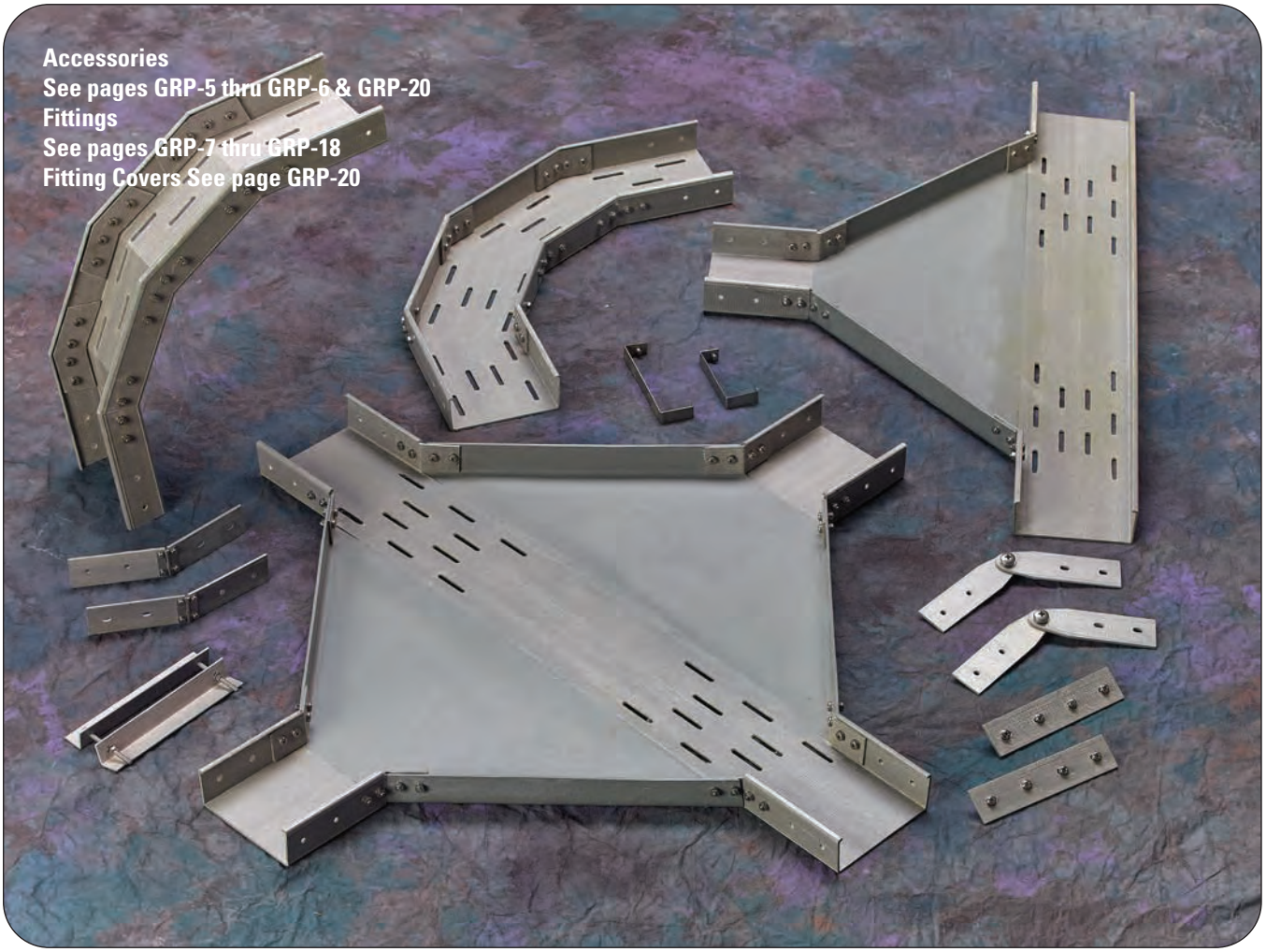
Accessories
See pages GRP-5 thru GRP-6 & GRP-20
Fittings
See pages GRP-7 thru GRP-18
Fitting Covers See page GRP-20

Perforated & Solid Cable Tray

Profiles

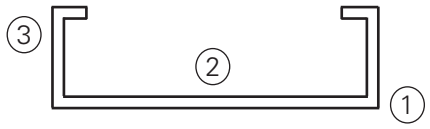

90° Inside Flange

1. Single piece construction
2. Solid or perforated bottoms provide continuous support
3. Labeled on every piece to show
   - Part Number
   - Company Name
   - Order Number
   - Material
4. Multiple resins available for every application

Splices -- providing system integrity

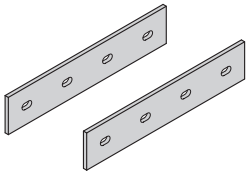

Splices -- the engineered connection:
- Match material of tray
- Solid pultruded design
- Supplied with 316 stainless steel hardware

Resin Types

Polyester Resin

- Lightest and most cost effective resin
- Tested to ASTM E662, UL 94, ASTM E84, and ASTM D635 for Fire Resistance Performance
- UV Resistant Per ISO 4582

Zero Halogen Resin

- Meets all performance characteristics of polyester resin above
- IEC 754 Certified for Low Smoke, Zero Halogen

Options available

- Carbon Veil - Meets dis-Stat requirements for ABS Certification Tested to CENELEC BS EN 50014, ASTM D257
- Slotted Rungs: Class Y Free base area per IEC 61537 available

Fiberglass Cable Tray Straight Section Part Numbering

Prefix

Example: **P 050 V C F SS - 150 - 3000**

Tray Type	Height	Bottom Type	Flange Type*	Material	Type	Width	Length
P = Pan Tray	**050** = 50mm††	**V** = Perforated **S** = Solid	**C** = 90°	**F** = Polyester Resin **FZ** = Zero Halogen Resin **FD** = Polyester Resin w/ Carbon Surface Veil **FH** = Zero Halogen Resin w/ Carbon Surface Veil	**SS** = Straight Section	**050** = 50mm† **075** = 75mm **100** = 100mm **150** = 150mm **200** = 200mm **300** = 300mm **450** = 450mm	**3000** = 3000mm

† No flange available upon request
†† **050** available in **050** through **450** widths

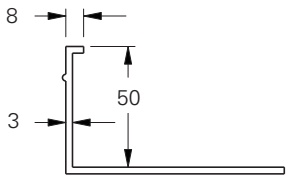

P050 Perforated shown

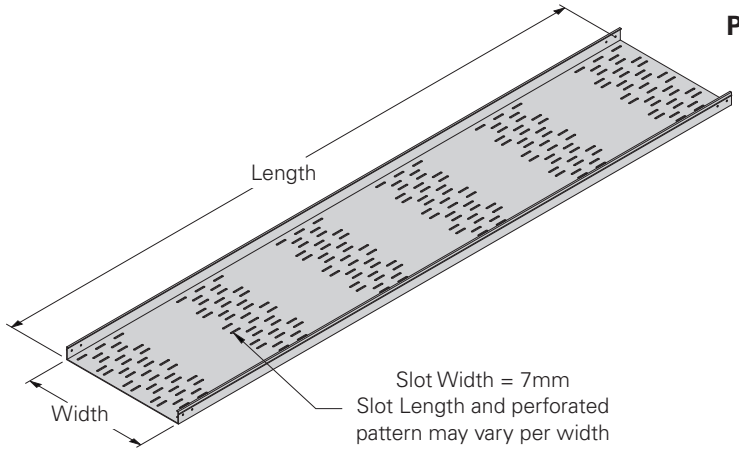

P050 Solid shown

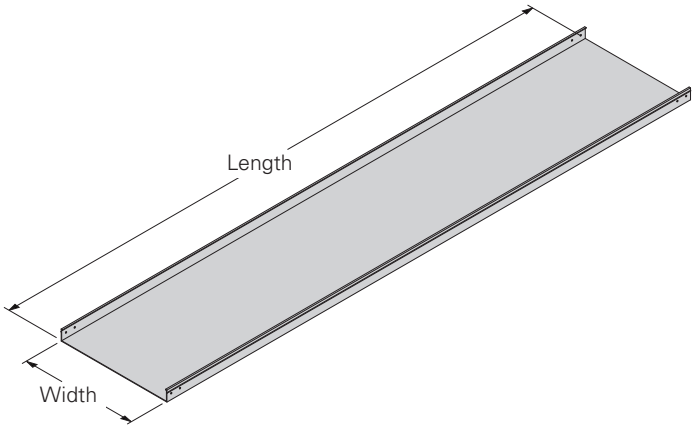

Dimensions are in millimeters unless otherwise specified.

Fiberglass Cable Tray Straight Section Part Numbering

Prefix

Example: **P 100 V C F SS - 150 - 3000**

Tray Type	Height	Bottom Type	Flange Type*	Material	Type	Width	Length
P = Pan Tray	**100** = 100mm††	**V** = Perforated **S** = Solid	**C** = 90°	**F** = Polyester Resin **FZ** = Zero Halogen Resin **FD** = Polyester Resin w/ Carbon Surface Veil **FH** = Zero Halogen Resin w/ Carbon Surface Veil	**SS** = Straight Section	**150** = 150mm **200** = 200mm **300** = 300mm **600** = 600mm	**3000** = 3000mm

† No flange available upon request
†† **100** available in **150** through **600** widths

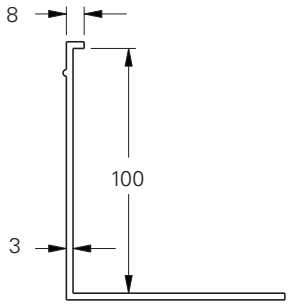

P100 Perforated shown

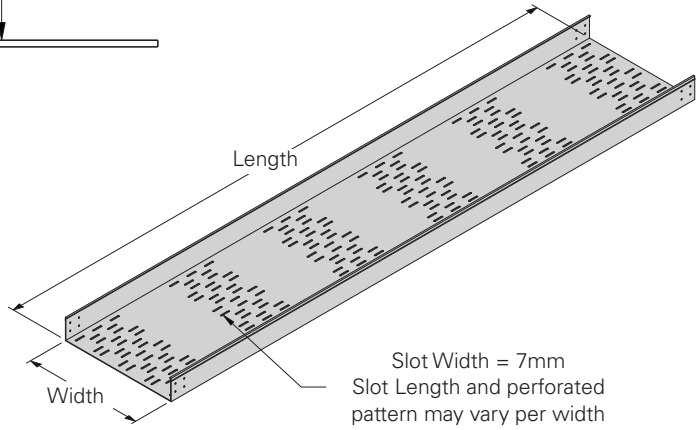

P100 Solid shown

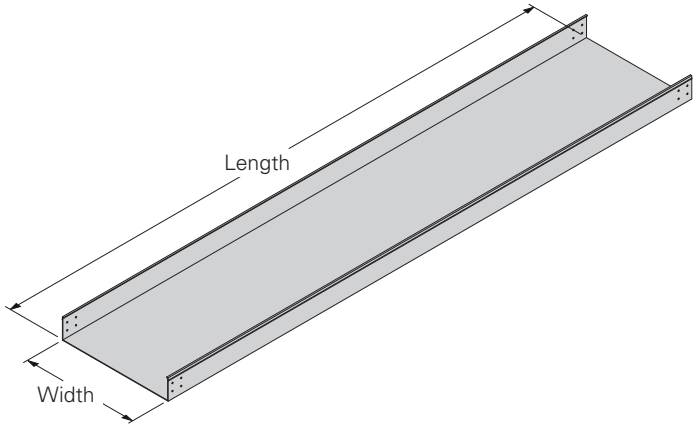

Fiberglass

Dimensions are in millimeters unless otherwise specified.

Fiberglass Cable Tray - Accessories

Side Splice Plates (Outside mount)

(Sold in Pairs With Hardware)

- ** Insert F, FZ, FD, or FH

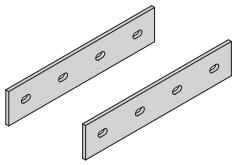

Part Number	Tray Height
PSP050**	50
PSP100**	100

Expansion Splice Plates (Outside mount)

(Sold in Pairs With Hardware)

- ** Insert F, FZ, FD, or FH

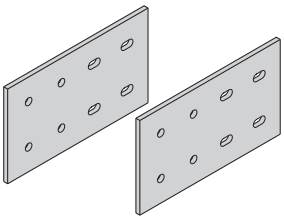

Part Number	Tray Height
PEP100**	100

Horizontal Adjustable Splice Plates (Outside mount)

(Sold in Pairs With Hardware)

- ** Insert F, FZ, FD, or FH
- Requires mitering of trays and drilling new splice plate holes on inside angle

Example:
40° bend requires
20° miter each end

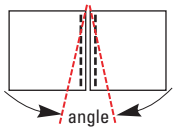

Miter 1/2 the required angle on each tray end

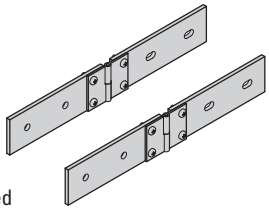

Part Number	Tray Height
PHAM050**	50
PHAM100**	100

Vertical Adjustable Splice Plates (Outside mount)

(Sold in Pairs With Hardware)

- ** Insert F, FZ, FD, or FH

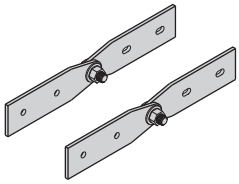

Part Number	Tray Height
PVA050**	50
PVA100**	100

Blind-End

(Sold Individually With Hardware)

- ** Insert F, FZ, FD, or FH
- (W) - Insert tray width

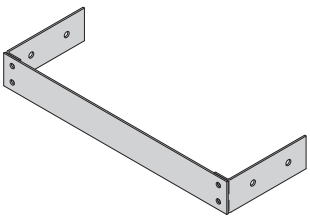

Part Number	Tray Height
PBE050**(W)	50
PBE100**(W)	100

Barriers

- Furnished with #10 x ½" self-drilling stainless steel screws

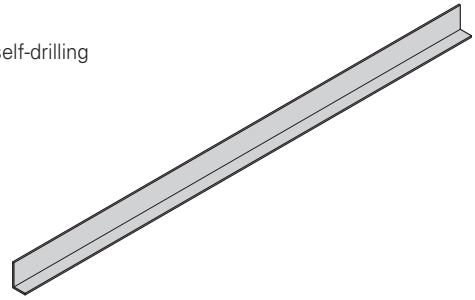

Catalog No.	Side Rail Height mm	Length mm
PSD050(Δ)-1500	50	1500
PSD050(Δ)-3000	50	3000
PSD100(Δ)-1500	100	1500
PSD100(Δ)-3000	100	3000

Horizontal Hold Downs

(Sold in Pairs With Hardware)

- Stainless Steel 316

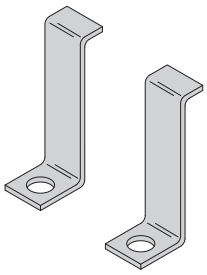

Part Number	Tray Height
PHC050SS6	50
PHC100SS6	100

Vertical Hold Downs

(Sold in Pairs With Hardware)

- Stainless Steel 316

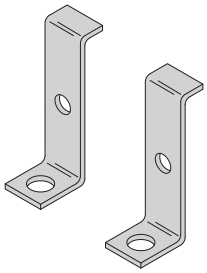

Part Number	Tray Height
PVC050SS6	50
PVC100SS6	100

Accessory Hardware

- Stainless Steel 316

Part Number	Item
M6 x 12.5 STS SS6	Self Tapping Screw
M6 SFHN (*)	Serrated Flange Hex Nut

Fiberglass

(Δ) See page GRP-3 for material selection

Dimensions are in millimeters unless otherwise specified.

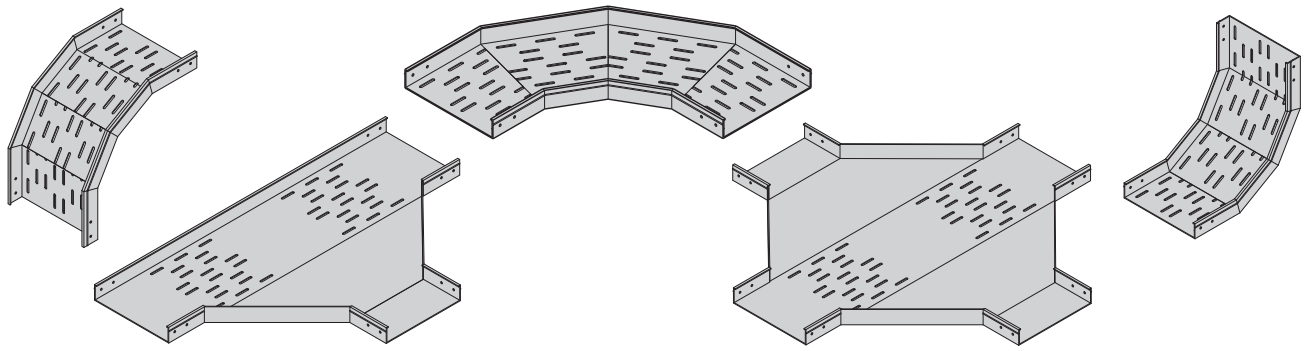

Fiberglass Cable Tray Fittings Part Numbering

Prefix | Suffix

Example: **P 050 V C F HB - 150 - 90 R600**

Tray Type	Height††	Bottom Type	Flange Type*	Material	Fitting Type	Width	Angle	Radius
P = Pan Tray	**050** = 50mm **100** = 100mm	**V** = Perforated **S** = Solid	**C** = 90°	**F** = Polyester Resin **FZ** = Zero Halogen Resin **FD** = Polyester Resin w/ Carbon Surface Veil **FH** = Zero Halogen Resin w/ Carbon Surface Veil	**HB** = Horz. Bend **HT** = Horz. Tee† **HX** = Horz. Cross† **VO** = Vert. Outside **VI** = Vert. Inside	**050** = 50mm **075** = 75mm **100** = 100mm **150** = 150mm **200** = 200mm **300** = 300mm **450** = 450mm **600** = 600mm	30° 45° 60° 90°	**R300** = 300mm **R600** = 600mm

† No angle designation required on these fittings
†† **050** available in **050** through **450** widths
†† **100** available in **150** through **600** widths

Fiberglass Cable Tray Reducer Fittings Part Numbering

Prefix | Suffix

Example: **P 050 V C F - 300 - SR - 100**

Tray Type	Height††	Bottom Type	Flange Type*	Material	Width 1	Fitting Type	Width 2
P = Pan Tray	**050** = 50mm **100** = 100mm	**V** = Perforated **S** = Solid	**C** = 90°	**F** = Polyester Resin **FZ** = Zero Halogen Resin **FD** = Polyester Resin w/ Carbon Surface Veil **FH** = Zero Halogen Resin w/ Carbon Surface Veil	**075** = 75mm **100** = 100mm **150** = 150mm **200** = 200mm **300** = 300mm **450** = 450mm **600** = 600mm	**LR** = Left Reducer **SR** = Straight Reducer **RR** = Right Reducer	**050** = 50mm **075** = 75mm **100** = 100mm **150** = 150mm **200** = 200mm **300** = 300mm **450** = 450mm

†† **050** available in **050** through **450** widths
†† **100** available in **150** through **600** widths

Horizontal Bend 90° (HB)

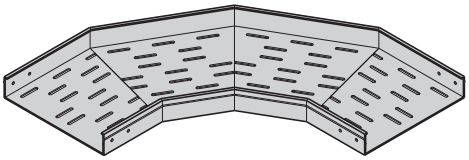

One pair of splice plates with SS6 hardware included.

- R - Bend Radius mm	Tray Width mm	90˚ Horizontal Bend - Mitered Catalog No.	Dimensions A mm	B mm
300	50*	(Prefix)HB-050-90R300	450	450
	75*	(Prefix)HB-075-90R300	475	475
	100*	(Prefix)HB-100-90R300	500	500
	150	(Prefix)HB-150-90R300	550	550
	200	(Prefix)HB-200-90R300	600	600
	300	(Prefix)HB-300-90R300	700	700
	450*	(Prefix)HB-450-90R300	850	850
	600**	(Prefix)HB-600-90R300	1000	1000
600	50*	(Prefix)HB-050-90R600	750	750
	75*	(Prefix)HB-075-90R600	775	775
	100*	(Prefix)HB-100-90R600	800	800
	150	(Prefix)HB-150-90R600	850	850
	200	(Prefix)HB-200-90R600	900	900
	300	(Prefix)HB-300-90R600	1000	1000
	450*	(Prefix)HB-450-90R600	1150	1150
	600**	(Prefix)HB-600-90R600	1300	1300

* Only available in 050 (50mm) height
** Only available in 100 (100mm) height

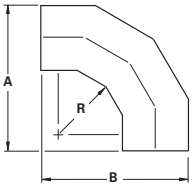

90˚ Mitered

Prefix - HB - 150 - 90 R300
- R300: Radius
- 90: Angle
- 150: Width
- HB: Fitting
- Prefix: To complete catalog number, insert fitting prefix.

(Prefix) See page GRP-7 for catalog number prefix.
Dimensions for reference only, when critical contact factory.

Fiberglass

Dimensions are in millimeters unless otherwise specified.

Horizontal Bend 60° (HB)

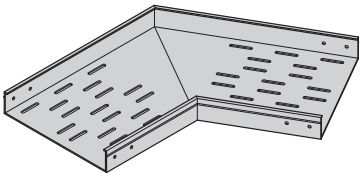

One pair of splice plates with SS6 hardware included.

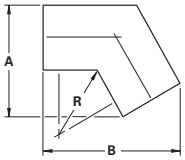

60˚ Mitered

Prefix - HB - 150 - 60 R300
- Radius
- Angle
- Width
- Fitting
- To complete catalog number, insert fitting prefix.

(Prefix) See page GRP-7 for catalog number prefix. Dimensions for reference only, when critical contact factory.

- R - Bend Radius mm	Tray Width mm	60˚ Horizontal Bend - Mitered Catalog No.	Dimensions A mm	Dimensions B mm
300	50*	**(Prefix)HB-050-60R300**	296	453
	75*	**(Prefix)HB-075-60R300**	312	475
	100*	**(Prefix)HB-100-60R300**	346	496
	150	**(Prefix)HB-150-60R300**	396	540
	200	**(Prefix)HB-200-60R300**	446	583
	300	**(Prefix)HB-300-60R300**	546	670
	450*	**(Prefix)HB-450-60R300**	696	800
	600**	**(Prefix)HB-600-60R300**	846	929
600	50*	**(Prefix)HB-050-60R600**	446	713
	75*	**(Prefix)HB-075-60R600**	462	735
	100*	**(Prefix)HB-100-60R600**	496	756
	150	**(Prefix)HB-150-60R600**	546	800
	200	**(Prefix)HB-200-60R600**	596	843
	300	**(Prefix)HB-300-60R600**	696	929
	450*	**(Prefix)HB-450-60R600**	846	1059
	600**	**(Prefix)HB-600-60R600**	996	1189

* Only available in 050 (50mm) height
** Only available in 100 (100mm) height

Fiberglass

Horizontal Bend 45° (HB)

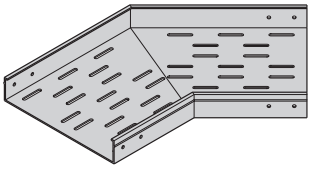

One pair of splice plates with SS6 hardware included.

- R - Bend Radius mm	Tray Width mm	45° Horizontal Bend - Mitered Catalog No.	Dimensions A mm	Dimensions B mm
300	50*	(Prefix)HB-050-45R300	209	418
	75*	(Prefix)HB-075-45R300	234	436
	100*	(Prefix)HB-100-45R300	259	454
	150	(Prefix)HB-150-45R300	309	489
	200	(Prefix)HB-200-45R300	359	524
	300	(Prefix)HB-300-45R300	459	595
	450*	(Prefix)HB-450-45R300	609	701
	600**	(Prefix)HB-600-45R300	759	807
600	50*	(Prefix)HB-050-45R600	296	630
	75*	(Prefix)HB-075-45R600	321	648
	100*	(Prefix)HB-100-45R600	346	666
	150	(Prefix)HB-150-45R600	396	701
	200	(Prefix)HB-200-45R600	446	736
	300	(Prefix)HB-300-45R600	546	807
	450*	(Prefix)HB-450-45R600	696	913
	600**	(Prefix)HB-600-45R600	846	1019

* Only available in 050 (50mm) height
** Only available in 100 (100mm) height

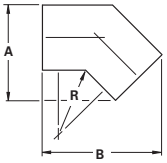

45° Mitered

Prefix - HB - 150 - 45 R300
- Radius
- Angle
- Width
- Fitting
- To complete catalog number, insert fitting prefix.

(Prefix) See page GRP-7 for catalog number prefix.
Dimensions for reference only, when critical contact factory.

Fiberglass

Dimensions are in millimeters unless otherwise specified.

Horizontal Bend 30° (HB)

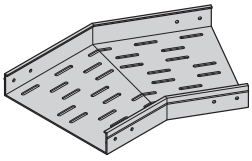

One pair of splice plates with SS6 hardware included.

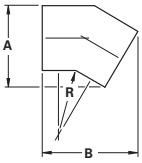

30˚ Mitered

Prefix - HB - 150 - 30 R300
- Radius
- Angle
- Width
- Fitting
- To complete catalog number, insert fitting prefix.

(Prefix) See page GRP-7 for catalog number prefix. Dimensions for reference only, when critical contact factory.

- R - Bend Radius mm	Tray Width mm	30˚ Horizontal Bend - Mitered Catalog No.	Dimensions A mm	Dimensions B mm
300	50*	**(Prefix)HB-050-30R300**	140	362
	75*	**(Prefix)HB-075-30R300**	165	374
	100*	**(Prefix)HB-100-30R300**	190	387
	150	**(Prefix)HB-150-30R300**	240	412
	200	**(Prefix)HB-200-30R300**	290	437
	300	**(Prefix)HB-300-30R300**	390	487
	450*	**(Prefix)HB-450-30R300**	540	562
	600**	**(Prefix)HB-600-30R300**	690	637
600	50*	**(Prefix)HB-050-30R600**	180	512
	75*	**(Prefix)HB-075-30R600**	205	524
	100*	**(Prefix)HB-100-30R600**	230	537
	150	**(Prefix)HB-150-30R600**	280	562
	200	**(Prefix)HB-200-30R600**	330	587
	300	**(Prefix)HB-300-30R600**	430	637
	450*	**(Prefix)HB-450-30R600**	580	712
	600**	**(Prefix)HB-600-30R600**	730	787

* Only available in 050 (50mm) height
** Only available in 100 (100mm) height

Horizontal Tee (HT)

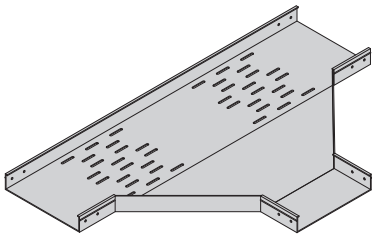

Two pair of splice plates with SS6 hardware included.

- R - Bend Radius mm	Tray Width mm	Horizontal Tee - Mitered Catalog No.	Dimensions A mm	Dimensions B mm
300	50*	**(Prefix)HT-050-R300**	500	950
	75*	**(Prefix)HT-075-R300**	525	975
	100*	**(Prefix)HT-100-R300**	550	1000
	150	**(Prefix)HT-150-R300**	600	1050
	200	**(Prefix)HT-200-R300**	650	1100
	300	**(Prefix)HT-300-R300**	750	1200
	450*	**(Prefix)HT-450-R300**	900	1350
	600**	**(Prefix)HT-600-R300**	1050	1500
600	50*	**(Prefix)HT-050-R600**	800	1550
	75*	**(Prefix)HT-075-R600**	825	1575
	100*	**(Prefix)HT-100-R600**	850	1600
	150	**(Prefix)HT-150-R600**	900	1650
	200	**(Prefix)HT-200-R600**	950	1700
	300	**(Prefix)HT-300-R600**	1050	1800
	450*	**(Prefix)HT-450-R600**	1200	1950
	600**	**(Prefix)HT-600-R600**	1350	2100

* Only available in 050 (50mm) height
** Only available in 100 (100mm) height

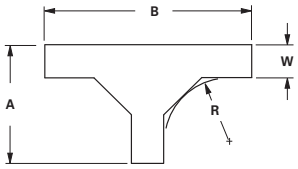

Mitered Tee

Prefix - HT - 200 - R300
- Radius
- Width
- Fitting
- To complete catalog number, insert fitting prefix.

(Prefix) See page GRP-7 for catalog number prefix.
Dimensions for reference only, when critical contact factory.

Fiberglass

Dimensions are in millimeters unless otherwise specified.

Horizontal Cross (HX)

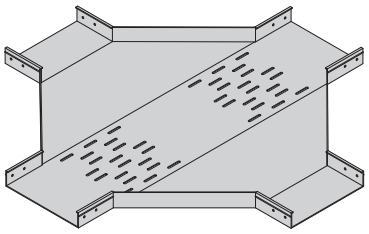

Three pair of splice plates with SS6 hardware included.

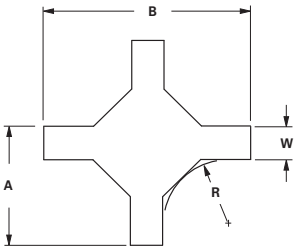

Mitered Cross

Prefix - HX - 200 - R300
- Radius
- Width
- Fitting
- To complete catalog number, insert fitting prefix.

(Prefix) See page GRP-7 for catalog number prefix.
Dimensions for reference only, when critical contact factory.

- R - Bend Radius mm	Tray Width mm	Horizontal Cross - Mitered Catalog No.	Dimensions A mm	Dimensions B mm
300	50*	**(Prefix)HX-050-R300**	500	950
	75*	**(Prefix)HX-075-R300**	525	975
	100*	**(Prefix)HX-100-R300**	550	1000
	150	**(Prefix)HX-150-R300**	600	1050
	200	**(Prefix)HX-200-R300**	650	1100
	300	**(Prefix)HX-300-R300**	750	1200
	450*	**(Prefix)HX-450-R300**	900	1350
	600**	**(Prefix)HX-600-R300**	1050	1500
600	50*	**(Prefix)HX-050-R600**	800	1550
	75*	**(Prefix)HX-075-R600**	825	1575
	100*	**(Prefix)HX-100-R600**	850	1600
	150	**(Prefix)HX-150-R600**	900	1650
	200	**(Prefix)HX-200-R600**	950	1700
	300	**(Prefix)HX-300-R600**	1050	1800
	450*	**(Prefix)HX-450-R600**	1200	1950
	600**	**(Prefix)HX-600-R600**	1350	2100

* Only available in 050 (50mm) height
** Only available in 100 (100mm) height

Reducers (LR) (SR) (RR)

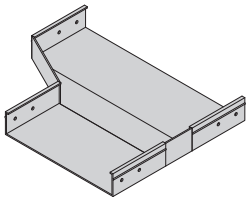

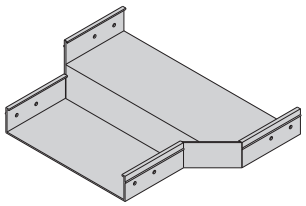

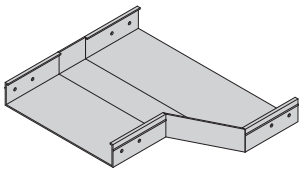

One pair of splice plates with SS6 hardware included.

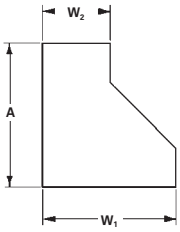

Left Reducer

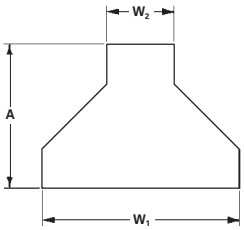

Straight Reducer

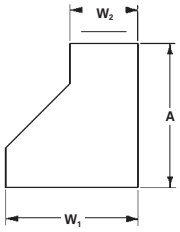

Right Reducer

Reducers are all of mitered construction.

(Prefix) See page GRP-7 for catalog number prefix.
Dimensions for reference only, when critical contact factory.

Prefix - 300 - SR 200
- Width$_2$ W_2
- Fitting
- Width$_1$ W_1
- To complete catalog number, insert fitting prefix.

Tray Width		Left Hand Reducer		Straight Reducer		Right Hand Reducer	
W_1 mm	W_2 mm	Catalog No.	A mm	Catalog No.	A mm	Catalog No.	A mm
75*	50*	**(Prefix)-075-LR-050**	312.5	**(Prefix)-075-SR-050**	312.5	**(Prefix)-075-RR-050**	312.5
100	50*	**(Prefix)-100-LR-050**	325	**(Prefix)-100-SR-050**	325	**(Prefix)-100-RR-050**	325
	75*	**(Prefix)-100-LR-075**	312.5	**(Prefix)-100-SR-075**	312.5	**(Prefix)-100-RR-075**	312.5
150	50*	**(Prefix)-150-LR-050**	350	**(Prefix)-150-SR-050**	350	**(Prefix)-150-RR-050**	350
	75*	**(Prefix)-150-LR-075**	337.5	**(Prefix)-150-SR-075**	337.5	**(Prefix)-150-RR-075**	337.5
	100*	**(Prefix)-150-LR-100**	325	**(Prefix)-150-SR-100**	325	**(Prefix)-150-RR-100**	325
200	50*	**(Prefix)-200-LR-050**	375	**(Prefix)-200SR-050**	375	**(Prefix)-200-RR-050**	375
	75*	**(Prefix)-200-LR-075**	362.5	**(Prefix)-200SR-075**	362.5	**(Prefix)-200-RR-075**	362.5
	100*	**(Prefix)-200-LR-100**	350	**(Prefix)-200SR-100**	350	**(Prefix)-200-RR-100**	350
	150	**(Prefix)-200-LR-150**	325	**(Prefix)-200SR-150**	325	**(Prefix)-200-RR-150**	325
300	50*	**(Prefix)-300-LR-050**	425	**(Prefix)-300-SR-050**	425	**(Prefix)-300-RR-050**	425
	75*	**(Prefix)-300-LR-075**	412.5	**(Prefix)-300-SR-075**	412.5	**(Prefix)-300-RR-075**	412.5
	100*	**(Prefix)-300-LR-100**	400	**(Prefix)-300-SR-100**	400	**(Prefix)-300-RR-100**	400
	150	**(Prefix)-300-LR-150**	375	**(Prefix)-300-SR-150**	375	**(Prefix)-300-RR-150**	375
	200	**(Prefix)-300-LR-200**	350	**(Prefix)-300-SR-200**	350	**(Prefix)-300-RR-200**	350
450	50*	**(Prefix)-450-LR-050**	500	**(Prefix)-450-SR-050**	500	**(Prefix)-450-RR-050**	500
	75*	**(Prefix)-450-LR-075**	487.5	**(Prefix)-450-SR-075**	487.5	**(Prefix)-450-RR-075**	487.5
	100*	**(Prefix)-450-LR-100**	475	**(Prefix)-450-SR-100**	475	**(Prefix)-450-RR-100**	475
	150	**(Prefix)-450-LR-150**	450	**(Prefix)-450-SR-150**	450	**(Prefix)-450-RR-150**	450
	200	**(Prefix)-450-LR-200**	425	**(Prefix)-450-SR-200**	425	**(Prefix)-450-RR-200**	425
	300	**(Prefix)-450-LR-300**	375	**(Prefix)-450-SR-300**	375	**(Prefix)-450-RR-300**	375
600**	150	**(Prefix)-600-LR-150**	525	**(Prefix)-600-SR-150**	525	**(Prefix)-600-RR-150**	525
	200	**(Prefix)-600-LR-200**	500	**(Prefix)-600-SR-200**	500	**(Prefix)-600-RR-200**	500
	300	**(Prefix)-600-LR-300**	450	**(Prefix)-600-SR-300**	450	**(Prefix)-600-RR-300**	450
	450	**(Prefix)-600-LR-450**	375	**(Prefix)-600-SR-450**	375	**(Prefix)-600-RR-450**	375

* Only available in 050 (50mm) height
** Only available in 100 (100mm) height

Dimensions are in millimeters unless otherwise specified.

Vertical Bends 90° (VO) (VI)

Vertical Outside Bend

VO

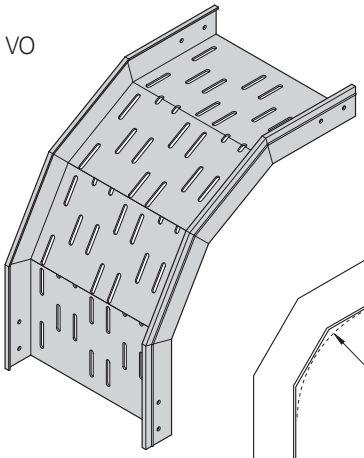

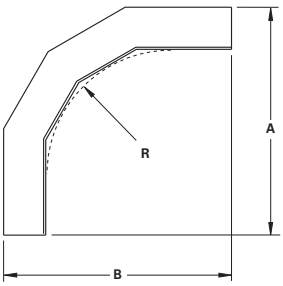

90˚ (VO) Mitered

Vertical Inside Bend

VI

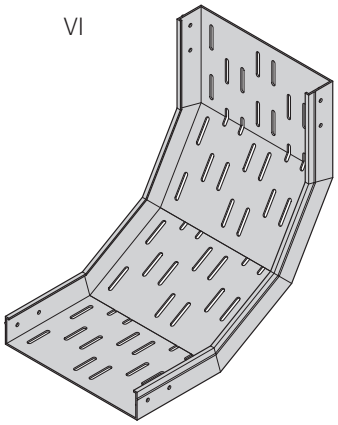

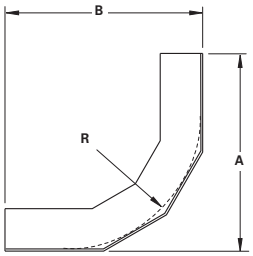

90˚ (VI) Mitered

Prefix VO - 150 - 90 R300
- Radius
- Angle
- Width
- Fitting
- To complete catalog number, insert fitting prefix.

One pair of splice plates with SS6 hardware included.

(Prefix) See page GRP-7 for catalog number prefix.
Dimensions for reference only, when critical contact factory.

Prefix VI - 150 - 90 R300
- Radius
- Angle
- Width
- Fitting
- To complete catalog number, insert fitting prefix.

- R - Bend Radius mm	Tray Width mm	Catalog No.	90˚ VO Mitered 050 Height A mm	90˚ VO Mitered 050 Height B mm	90˚ VO Mitered 100 Height A mm	90˚ VO Mitered 100 Height B mm	90˚ VI Mitered 050 Height A mm	90˚ VI Mitered 050 Height B mm	90˚ VI Mitered 100 Height A mm	90˚ VI Mitered 100 Height B mm
300	50*	(Prefix)(*)-050-90R300	450	450	510	510	450	450	510	510
	75*	(Prefix)(*)-075-90R300								
	100*	(Prefix)(*)-100-90R300								
	150	(Prefix)(*)-150-90R300								
	200	(Prefix)(*)-200-90R300								
	300	(Prefix)(*)-300-90R300								
	450*	(Prefix)(*)-450-90R300								
	600**	(Prefix)(*)-600-90R300								
600	50*	(Prefix)(*)-050-90R600	750	750	810	810	750	750	810	810
	75*	(Prefix)(*)-075-90R600								
	100*	(Prefix)(*)-100-90R600								
	150	(Prefix)(*)-150-90R600								
	200	(Prefix)(*)-200-90R600								
	300	(Prefix)(*)-300-90R600								
	450*	(Prefix)(*)-450-90R600								
	600**	(Prefix)(*)-600-90R600								

* Only available in 050 (50mm) height
** Only available in 100 (100mm) height

Fiberglass

Dimensions are in millimeters unless otherwise specified.

Vertical Bends 60° (VO) (VI)

Vertical Outside Bend

VO

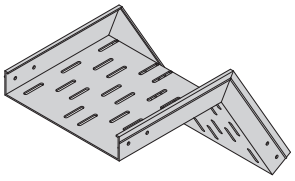

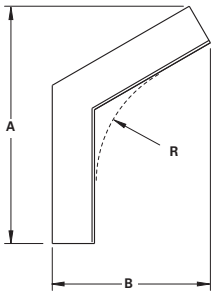

60˚ (VO) Mitered

Vertical Inside Bend

VI

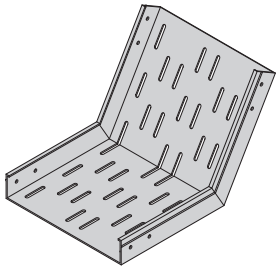

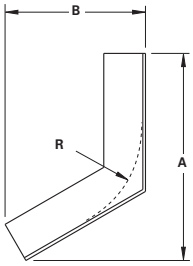

60˚ (VI) Mitered

Prefix VO - 150 - 60 R300
- Radius
- Angle
- Width
- Fitting
- To complete catalog number, insert fitting prefix.

One pair of splice plates with SS6 hardware included.

(Prefix) See page GRP-7 for catalog number prefix.
Dimensions for reference only, when critical contact factory.

Prefix VI - 150 - 60 R300
- Radius
- Angle
- Width
- Fitting
- To complete catalog number, insert fitting prefix.

- R - Bend Radius mm	Tray Width mm	Catalog No.	60˚ VO Mitered 050 Height A mm	60˚ VO Mitered 050 Height B mm	60˚ VO Mitered 100 Height A mm	60˚ VO Mitered 100 Height B mm	60˚ VI Mitered 050 Height A mm	60˚ VI Mitered 050 Height B mm	60˚ VI Mitered 100 Height A mm	60˚ VI Mitered 100 Height B mm
300	50*	**(Prefix)(*)-050-60R300**	453	287	505	347	410	262	410	292
	75*	**(Prefix)(*)-075-60R300**								
	100*	**(Prefix)(*)-100-60R300**								
	150	**(Prefix)(*)-150-60R300**								
	200	**(Prefix)(*)-200-60R300**								
	300	**(Prefix)(*)-300-60R300**								
	450*	**(Prefix)(*)-450-60R300**								
	600**	**(Prefix)(*)-600-60R300**								
600	50*	**(Prefix)(*)-050-60R600**	713	437	765	497	670	412	670	442
	75*	**(Prefix)(*)-075-60R600**								
	100*	**(Prefix)(*)-100-60R600**								
	150	**(Prefix)(*)-150-60R600**								
	200	**(Prefix)(*)-200-60R600**								
	300	**(Prefix)(*)-300-60R600**								
	450*	**(Prefix)(*)-450-60R600**								
	600**	**(Prefix)(*)-600-60R600**								

* Only available in 050 (50mm) height
** Only available in 100 (100mm) height

Fiberglass

Dimensions are in millimeters unless otherwise specified.

Vertical Bends 45° (VO) (VI)

Vertical Outside Bend

VO

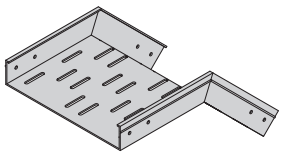

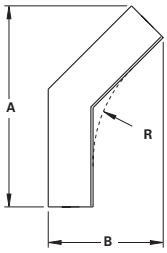

45˚ (VO) Mitered

Vertical Inside Bend

VI

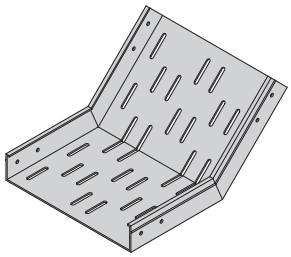

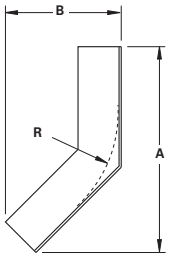

45˚ (VI) Mitered

Prefix VO - 150 - 45 R300
- Radius
- Angle
- Width
- Fitting
- To complete catalog number, insert fitting prefix.

One pair of splice plates with SS6 hardware included.

(Prefix) See page GRP-7 for catalog number prefix.
Dimensions for reference only, when critical contact factory.

Prefix VI - 150 - 45 R300
- Radius
- Angle
- Width
- Fitting
- To complete catalog number, insert fitting prefix.

- R - Bend Radius mm	Tray Width mm	Catalog No.	45˚ VO Mitered 050 Height A mm	45˚ VO Mitered 050 Height B mm	45˚ VO Mitered 100 Height A mm	45˚ VO Mitered 100 Height B mm	45˚ VI Mitered 050 Height A mm	45˚ VI Mitered 050 Height B mm	45˚ VI Mitered 100 Height A mm	45˚ VI Mitered 100 Height B mm
300	50*	(Prefix)(*)-050-45R300	418	209	461	269	383	194	383	236
	75*	(Prefix)(*)-075-45R300								
	100*	(Prefix)(*)-100-45R300								
	150	(Prefix)(*)-150-45R300								
	200	(Prefix)(*)-200-45R300								
	300	(Prefix)(*)-300-45R300								
	450*	(Prefix)(*)-450-45R300								
	600**	(Prefix)(*)-600-45R300								
600	50*	(Prefix)(*)-050-45R600	630	296	673	356	595	282	595	324
	75*	(Prefix)(*)-075-45R600								
	100*	(Prefix)(*)-100-45R600								
	150	(Prefix)(*)-150-45R600								
	200	(Prefix)(*)-200-45R600								
	300	(Prefix)(*)-300-45R600								
	450*	(Prefix)(*)-450-45R600								
	600**	(Prefix)(*)-600-45R600								

* Only available in 050 (50mm) height
** Only available in 100 (100mm) height

Dimensions are in millimeters unless otherwise specified.

Vertical Bends 30° (VO) (VI)

Vertical Outside Bend

VO

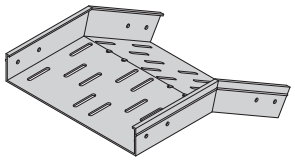

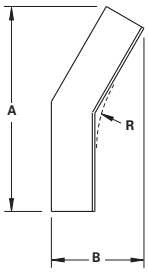

30˚ (VO) Mitered

Vertical Inside Bend

VI

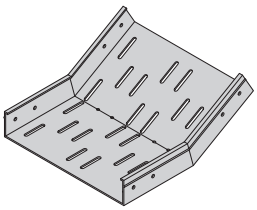

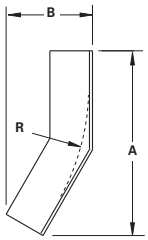

30˚ (VI) Mitered

Prefix VO - 150 - 30 R300
- Radius
- Angle
- Width
- Fitting
- To complete catalog number, insert fitting prefix.

One pair of splice plates with SS6 hardware included.

(Prefix) See page GRP-7 for catalog number prefix.
Dimensions for reference only, when critical contact factory.

Prefix VI - 150 - 30 R300
- Radius
- Angle
- Width
- Fitting
- To complete catalog number, insert fitting prefix.

- R - Bend Radius mm	Tray Width mm	Catalog No.	30˚ VO Mitered 050 Height A mm	30˚ VO Mitered 050 Height B mm	30˚ VO Mitered 100 Height A mm	30˚ VO Mitered 100 Height B mm	30˚ VI Mitered 050 Height A mm	30˚ VI Mitered 050 Height B mm	30˚ VI Mitered 100 Height A mm	30˚ VI Mitered 100 Height B mm
300	50*	**(Prefix)(*)-050-30R300**	362	140	392	200	337	133	337	185
	75*	**(Prefix)(*)-075-30R300**								
	100*	**(Prefix)(*)-100-30R300**								
	150	**(Prefix)(*)-150-30R300**								
	200	**(Prefix)(*)-200-30R300**								
	300	**(Prefix)(*)-300-30R300**								
	450*	**(Prefix)(*)-450-30R300**								
	600**	**(Prefix)(*)-600-30R300**								
600	50*	**(Prefix)(*)-050-30R600**	512	180	542	240	487	174	487	226
	75*	**(Prefix)(*)-075-30R600**								
	100*	**(Prefix)(*)-100-30R600**								
	150	**(Prefix)(*)-150-30R600**								
	200	**(Prefix)(*)-200-30R600**								
	300	**(Prefix)(*)-300-30R600**								
	450*	**(Prefix)(*)-450-30R600**								
	600**	**(Prefix)(*)-600-30R600**								

* Only available in 050 (50mm) height
** Only available in 100 (100mm) height

Fiberglass

Dimensions are in millimeters unless otherwise specified.

Covers

Material Thickness: ⅛" (3mm)

Cover Length: 10' (3m)

Standard Mounting Hardware:
(10 each) #10 x ½" stainless, self drilling screws provided with each section

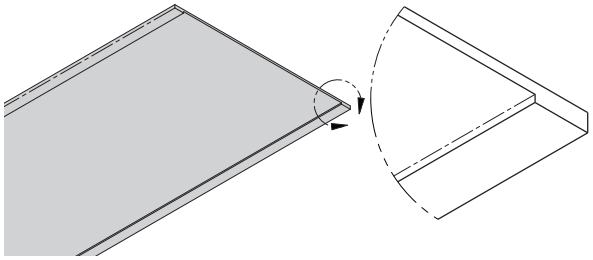

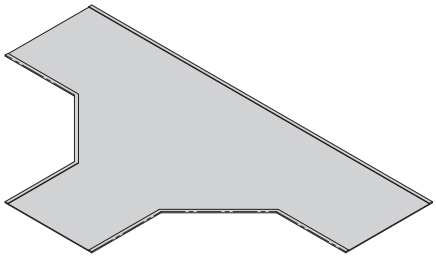

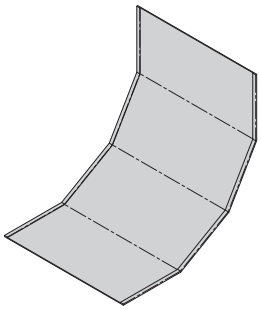

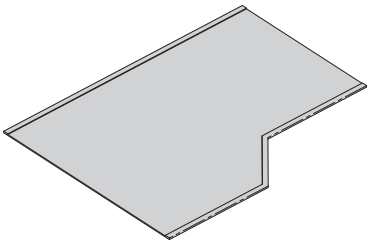

Fiberglass Cable Tray Straight Section Covers Part Numbering

Example: **PCF S F SS - 150 - 3000**

Prefix: PCF S F — Suffix: SS - 150 - 3000

Tray Type	Top Style	Material	Type	Width	Length
PCF = Cable Tray Cover Fiberglass	**S** = Solid	**F** = Polyester Resin **FZ** = Zero Halogen Resin **FD** = Polyester Resin w/ Carbon Surface Veil **FH** = Zero Halogen Resin w/ Carbon Surface Veil	**SS** = Straight Section	**050** = 50mm **100** = 100mm **150** = 150mm **200** = 200mm **300** = 300mm **450** = 450mm **600** = 600mm	**3000** = 3000mm

Quantity of Cover Clamps Required	
Straight Section 3000mm	2 pcs.
Horizontal/Vertical Bends	2 pcs.
Tees	3 pcs.
Crosses	4 pcs.

Fiberglass

Dimensions are in millimeters unless otherwise specified.

Fiberglass Cable Tray Fitting Covers Part Numbering

Prefix — Suffix

Example: **PCF S F VO - 150 - 90 R600 - 050** **(side rail height)**

Tray Type
PCF = Cable Tray Cover Fiberglass

Top Style
S = Solid

Material
F = Polyester Resin
FZ = Zero Halogen Resin
FD = Polyester Resin w/ Carbon Surface Veil
FH = Zero Halogen Resin w/ Carbon Surface Veil

HB **Insert HB Suffix from pages GRP-8 – GRP-11**
HT **Insert HT Suffix from page GRP-12**
HX **Insert HX Suffix from page GRP-13**
LR **Insert LR Suffix from page GRP-14**
SR **Insert SR Suffix from page GRP-14**
RR **Insert RR Suffix from page GRP-14**
VI **Insert VI Suffix from pages GRP-15 – GRP-18**
VO **Insert VO Suffix from pages GRP-15 – GRP-18 & Side Rail Height**

Wrap Around Cover Clamp

Recommended for outdoor service.
- W = ladder width
- Heavy duty cover clamp available for flat covers only

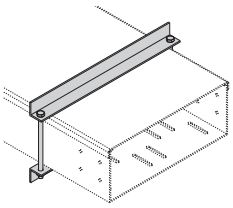

Catalog No.	Side Rail Height mm
PWCC050(Δ)(W)	50
PWCC100(Δ)(W)	100

Thermo Plastic Drive Rivet

Shipped in packages of 25 pcs.

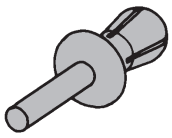

Catalog No.
TPDR

Material Designations
(Δ) Insert one of the following material designations from chart on page GRP-19 when required.

Fiberglass

Dimensions are in millimeters unless otherwise specified.

Straight Sections See pages GRP-23 thru GRP-26
Straight Section Covers See page GRP-42

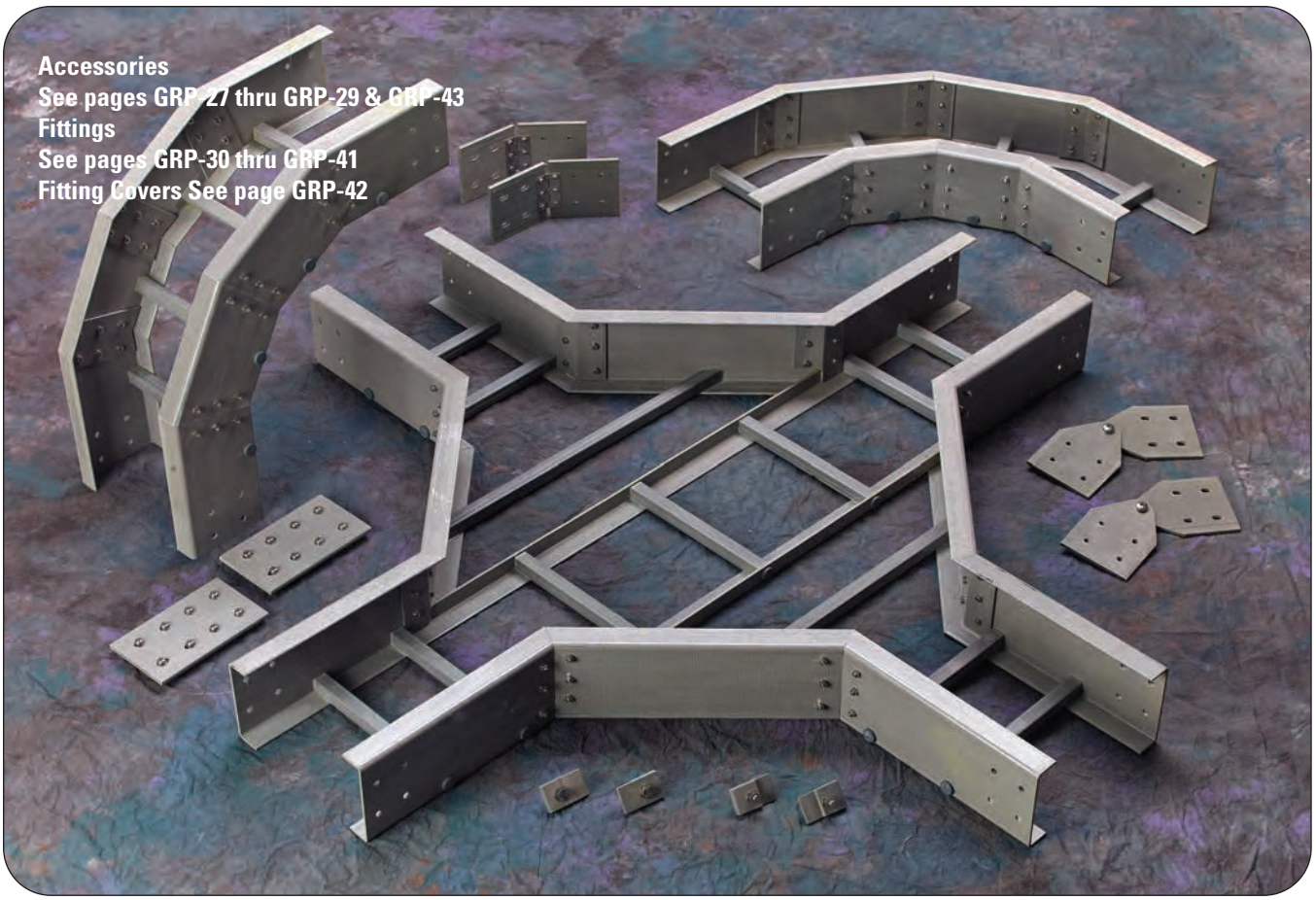
Accessories
See pages GRP-27 thru GRP-29 & GRP-43
Fittings
See pages GRP-30 thru GRP-41
Fitting Covers See page GRP-42

Glass Reinforced Polyester (GRP) Cable Ladder

Side Rails

- Maximized material efficiency for lower weight
- Optimized material distribution increases ladder stiffness
- Pultruded fiberglass shapes maximize corrosion resistance

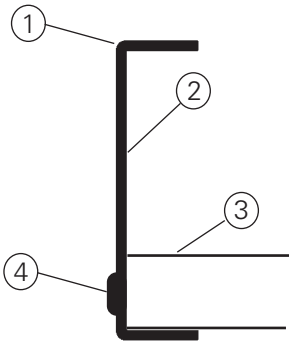

1. **Pultruded siderails and rungs designed to NEMA FG-1 Standards**
2. **Made from high quality structural grade resins**
3. **Positive Rung Support**
4. **Rungs mechanically fastened and resin sealed for a watertight connection**

Splices – providing system integrity

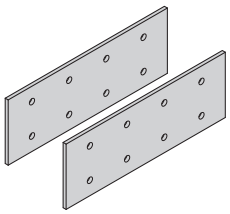

Splices – the engineered connection:

- Resin matches tray to maintain performance
- 316 stainless steel hardware ideal for corrosion resistance
- Eight-bolt connection minimizes deflection at the splice location

Resin Types

Polyester Resin

- Lightest and most cost effective resin
- Tested to ASTM E662, UL 94, ASTM E84, and ASTM D635 for Fire Resistance Performance
- UV Resistant Per ISO 4582

Zero Halogen Resin

- Meets all performance characteristics of polyester resin above
- IEC 754 Certified for Low Smoke, Zero Halogen

Options available

- Carbon Veil - Meets dis-Stat requirements for ABS Certification Tested to CENELEC BS EN 50014, ASTM D257
- Slotted Rungs: Class Y Free base area per IEC 61537 available

Fiberglass Cable Ladder - Straight Sections

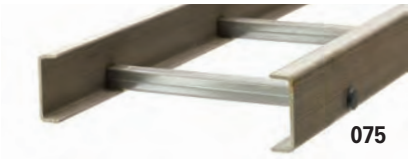

One pair of splice plates with SS6
(316 Stainless Steel) hardware included

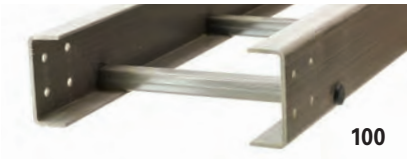

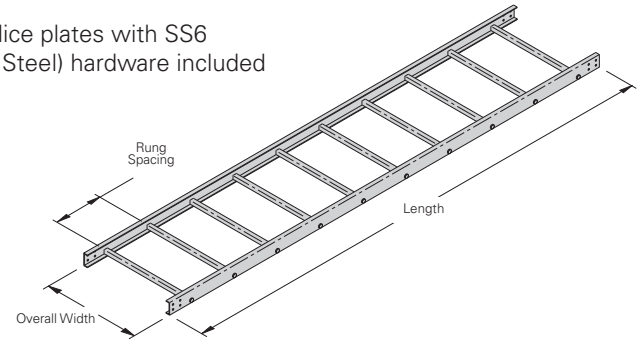

Fiberglass Cable Ladder Straight Section Part Numbering

Example: **100 F 225 N D 02C LL - 0300 - 3000**

Prefix: **100 F 225 N D** — Suffix: **02C LL - 0300 - 3000**

Ladder Height
- **075** = 75mm
- **100** = 100mm

Material Type
- **F** = Polyester Resin
- **FZ** = Zero Halogen Resin
- **FD** = Polyester Resin w/ Carbon Surface Veil
- **FH** = Zero Halogen Resin w/ Carbon Surface Veil

Rung Spacing
- **150** = 150mm
- **225** = 225mm
- **250** = 250mm
- **300** = 300mm

Rung Shape
- **N** = Non-Slotted
- **S** = Slotted

Rung Orientation
- **D** = Down

Series
- **02C** = 75mm & 100mm tray heights

Type
- **LL** = Ladder Straight Section

Width
- **0150** = 150mm
- **0200** = 200mm
- **0300** = 300mm
- **0450** = 450mm
- **0600** = 600mm
- **0750** = 750mm
- **0900** = 900mm

Length
- **3000** = 3000mm
- **6000** = 6000mm†

† Only available for 100mm height

B-Line Series	Side Rail Dimensions	NEMA & CSA Classifications	Span ft	Load lbs/ft	Deflection Multiplier	Span meters	Load kg/m	Deflection Multiplier
075 02C	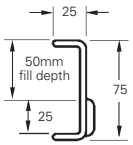	NEMA: 10C	6	292.5	0.003	1.8	435.3	0.059
			8	164.5	0.011	2.4	244.8	0.187
			9.8	108.7	0.027	3.0	161.7	0.457

B-Line Series	Side Rail Dimensions	NEMA & CSA Classifications	Span ft	Load lbs/ft	Deflection Multiplier	Span meters	Load kg/m	Deflection Multiplier
100 02C	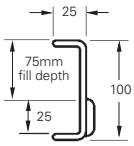	NEMA: 16A, 12C	8	270.8	0.004	2.4	403.0	0.067
			10	173.3	0.010	3.0	257.9	0.162
			12	120.4	0.020	3.7	179.1	0.337
			14	88.4	0.037	4.3	131.6	0.624
			16	67.7	0.062	4.9	100.7	1.064

Values are based on simple beam tests per NEMA VFG-1 on 24" wide cable ladder rungs spaced on 12" centers. Published load safety factor is 1.5. To convert 1.5 safety factor to 2.0, multiply published load by 0.75. To obtain mid-span deflection, multiply a load by the deflection multiplier. Cable ladder must be supported on spans shorter than or equal to the length of the cable being installed.

When ladders are used in continuous spans, the deflection of the ladder is reduced by as much as 50%.

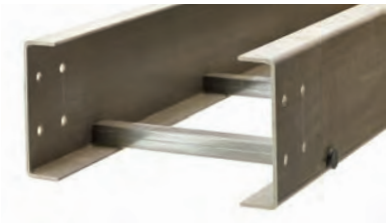

One pair of splice plates with SS6 (316 Stainless Steel) hardware included

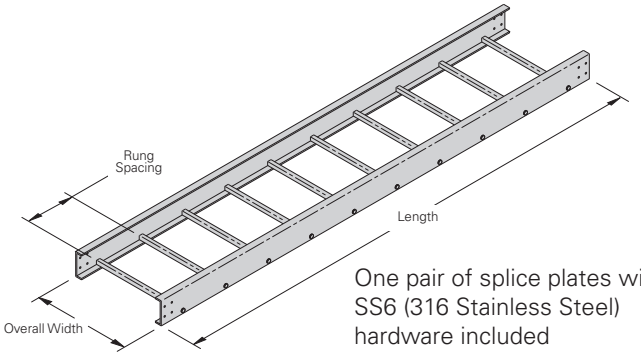

One pair of splice plates with SS6 (316 Stainless Steel) hardware included

Fiberglass Cable Ladder Straight Section Part Numbering

Prefix — Suffix

Example: **150 F 225 N D 03C LL - 0300 - 3000**

Ladder Height	Material Type	Rung Spacing	Rung Shape	Rung Orientation	Series	Type	Width	Length
150 = 150mm	**F** = Polyester Resin **FZ** = Zero Halogen Resin **FD** = Polyester Resin w/ Carbon Surface Veil **FH** = Zero Halogen Resin w/ Carbon Surface Veil	**150** = 150mm **225** = 225mm **250** = 250mm **300** = 300mm	**N** = Non-Slotted **S** = Slotted	**D** = Down	**03C**	**LL** = Ladder Straight Section	**0150** = 150mm **0200** = 200mm **0300** = 300mm **0450** = 450mm **0600** = 600mm **0750** = 750mm **0900** = 900mm	**3000** = 3000mm **6000** = 6000mm

B-Line Series	Side Rail Dimensions	NEMA & CSA Classifications	Span ft	Load lbs/ft	Deflection Multiplier	Span meters	Load kg/m	Deflection Multiplier
150 03C	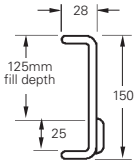	NEMA: 16B, 12C	10	241.9	0.003	3.0	360.0	0.057
			12	168.0	0.007	3.7	250.0	0.118
			14	123.4	0.013	4.3	183.7	0.218
			16	94.5	0.022	4.9	140.6	0.372

Values are based on simple beam tests per NEMA VFG-1 on 36" wide cable ladder rungs spaced on 12" centers. Published load safety factor is 1.5. To convert 1.5 safety factor to 2.0, multiply published load by 0.75. To obtain mid-span deflection, multiply a load by the deflection multiplier. Cable ladder must be supported on spans shorter than or equal to the length of the cable being installed.

When ladders are used in continuous spans, the deflection of the ladder is reduced by as much as 50%.

Fiberglass Cable Ladder - Straight Sections

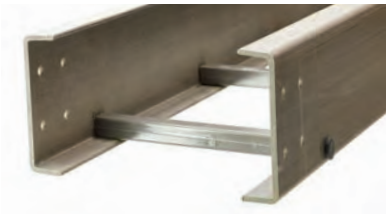

One pair of splice plates with SS6 (316 Stainless Steel) hardware included

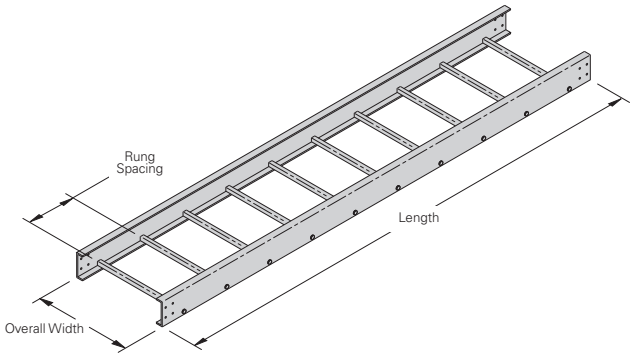

Fiberglass Cable Ladder Straight Section Part Numbering

Prefix — Suffix

Example: **150 F 225 N D 04C LL - 0300 - 3000**

Ladder Height	Material Type	Rung Spacing	Rung Shape	Rung Orientation	Series	Type	Width	Length
150 = 150mm	**F** = Polyester Resin **FZ** = Zero Halogen Resin **FD** = Polyester Resin w/ Carbon Surface Veil **FH** = Zero Halogen Resin w/ Carbon Surface Veil	**150** = 150mm **225** = 225mm **250** = 250mm **300** = 300mm	**N** = Non-Slotted **S** = Slotted	**D** = Down	**04C**	**LL** = Ladder Straight Section	**0150** = 130mm **0200** = 200mm **0300** = 300mm **0450** = 450mm **0600** = 600mm **0750** = 750mm **0900** = 900mm	**3000** = 3000mm **6000** = 6000mm

B-Line Series	Side Rail Dimensions	NEMA & CSA Classifications	Span ft	Load lbs/ft	Deflection Multiplier	Span meters	Load kg/m	Deflection Multiplier
150 04C	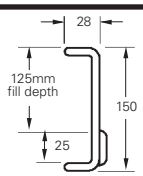	NEMA: 20C	12	297.6	0.005	3.7	442.9	0.086
			14	218.7	0.009	4.3	325.4	0.159
			16	167.4	0.016	4.9	249.1	0.271
			18	132.3	0.025	5.5	196.8	0.433
			19.7	110.6	0.039	6.0	164.6	0.661

Values are based on simple beam tests per NEMA VFG-1 on 36" wide cable ladder rungs spaced on 12" centers. Published load safety factor is 1.5. To convert 1.5 safety factor to 2.0, multiply published load by 0.75. To obtain mid-span deflection, multiply a load by the deflection multiplier. Cable ladder must be supported on spans shorter than or equal to the length of the cable being installed.

When ladders are used in continuous spans, the deflection of the ladder is reduced by as much as 50%.

One pair of splice plates with SS6
(316 Stainless Steel) hardware included

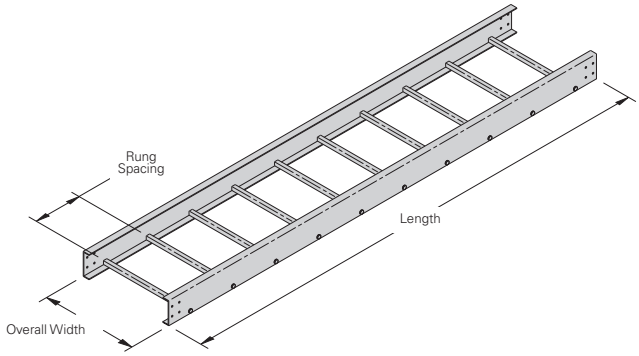

Fiberglass Cable Ladder Straight Section Part Numbering

Prefix — Suffix

Example: **150 F 225 N D 05C LL - 0300 - 3000**

Ladder Height	Material Type	Rung Spacing	Rung Shape	Rung Orientation	Series	Type	Width	Length
150 = 150mm	**F** = Polyester Resin **FZ** = Zero Halogen Resin **FD** = Polyester Resin w/ Carbon Surface Veil **FH** = Zero Halogen Resin w/ Carbon Surface Veil	**150** = 150mm **225** = 225mm **250** = 250mm **300** = 300mm	**N** = Non-Slotted **S** = Slotted	**D** = Down	**05C**	**LL** = Ladder Straight Section	**0150** = 150mm **0200** = 200mm **0300** = 300mm **0450** = 450mm **0600** = 600mm **0750** = 750mm **0900** = 900mm	**3000** = 3000mm **6000** = 6000mm

B-Line Series	Side Rail Dimensions	NEMA & CSA Classifications	Span ft	Load lbs/ft	Deflection Multiplier	Span meters	Load kg/m	Deflection Multiplier
150 05C	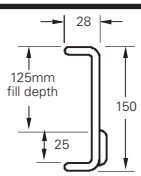	NEMA: 20C	14	326.4	0.007	4.3	485.7	0.115
			16	249.9	0.011	4.9	371.9	0.196
			18	197.5	0.018	5.5	293.8	0.314
			19.7	165.1	0.028	6.0	245.7	0.479

Values are based on simple beam tests per NEMA VFG-1 on 36" wide cable ladder rungs spaced on 12" centers. Published load safety factor is 1.5. To convert 1.5 safety factor to 2.0, multiply published load by 0.75. To obtain mid-span deflection, multiply a load by the deflection multiplier. Cable ladder must be supported on spans shorter than or equal to the length of the cable being installed.

When ladders are used in continuous spans, the deflection of the ladder is reduced by as much as 50%.

Fiberglass Cable Ladder - Accessories

Part Number Explanation
Note: All hardware is M8

Hardware	316 Stainless Steel
	SS6

Example: LSP100F: pair of standard splice plates for 4" (101) system Polyester Resin
LSP100FZ: pair of standard splice plates for 4" (101) system Zero Halogen Resin

Standard Splice Plates

Included in needed quantities with ladder section.
- Furnished in pairs
- Order only pairs of splice plates needed for field fabrication
- Supplied with SS6 hardware

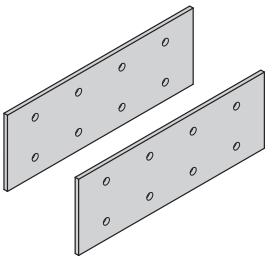

Material	Height	Catalog No.
Fiberglass	3" (76)	**LSP075(Δ)**
	4" (101)	**LSP100(Δ)**
	6" (152)	**LSP150(Δ)**

Expansion Splice Plate

L-shaped, lay-in style
- Furnished in pairs
- Supplied with SS6 hardware

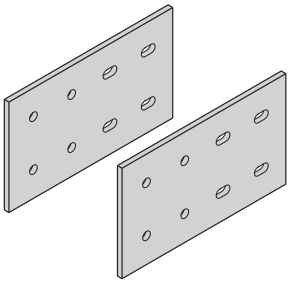

Material	Height	Catalog No.
Fiberglass	3" (76)	**LES075(Δ)**
	4" (101)	**LES100(Δ)**
	6" (152)	**LES150(Δ)**

Vertical Adjustable Splice Plates

These plates provide for changes in elevation that do not conform to standard vertical fittings.
- Furnished in pairs
- Supplied with SS6 hardware

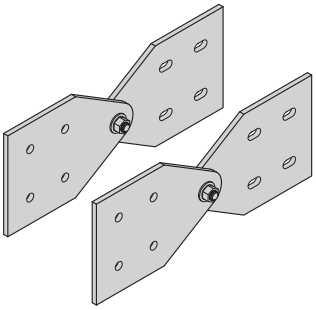

Material	Height	Catalog No.
Fiberglass	3" (76)	**LVA075(Δ)**
	4" (101)	**LVA100(Δ)**
	6" (152)	**LVA150(Δ)**

Horizontal Adjustable Splice Plates

These plates provide for changes in the horizontal direction that do not conform to standard fittings.
- Furnished in pairs
- Stainless steel hinges, FRP body
- Supplied with SS6 hardware

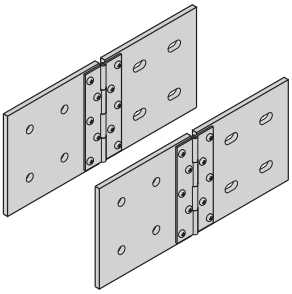

Material	Height	Catalog No.
Fiberglass	3" (76)	**LHA075(Δ)**
	4" (101)	**LHA100(Δ)**
	6" (152)	**LHA150(Δ)**

(Δ) Material Insert: **F** = Polyester Resin, **FZ** = Zero Halogen Resin, **FD** = F w/ Carbon Surface Veil, **FH** = FZ w/ Carbon Surface Veil

Dimensions are in millimeters unless otherwise specified.

Blind End Plate

This plate forms a closure for any ladder that dead ends.

- Furnished as one plate
- W = insert ladder width

* Hardware suffix needed to complete part number

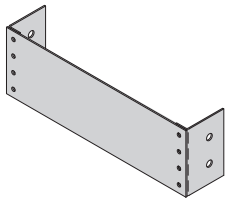

Material	Height	Catalog No.
Fiberglass	3" (76)	**LBE075(Δ)(W)**
	4" (101)	**LBE100(Δ)(W)**
	6" (152)	**LBE150(Δ)(W)**

Ladder Drop-Out

Specially designed Ladder Drop-Outs provide a rounded surface with adequate radius to protect cable as it exits from the ladder, helping prevent damage to insulation.

- 100mm radius
- Drop-out width = 150mm

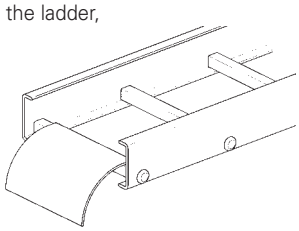

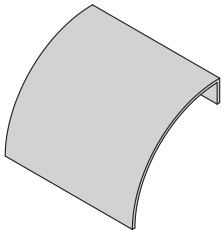

Catalog No.
LDO(Δ)

Horizontal Clamp/Guide - Fiberglass

- Non-metallic
- M10 hardware included
- Combination hold down clamp and guide for horizontal applications
- (Δ) Insert material (see bottom of page)
- Sold in pairs

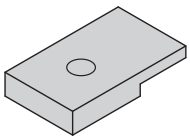

Material	Tray Size	Catalog No.
Fiberglass	075 02C	**LHC075(Δ)02C**
	100 02C	**LHC100(Δ)02C**
	150 03C	**LHC150(Δ)03C**
	150 04C	**LHC150(Δ)04C**
	150 04C	**LHC150(Δ)05C**

Vertical Clamp/Guide - Fiberglass

- Non-metallic
- M10 hardware included
- Combination hold down clamp and guide for vertical applications
- (Δ) Insert material (see bottom of page)
- Sold in pairs

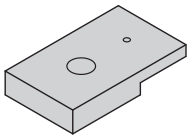

Material	Tray Size	Catalog No.
Fiberglass	075 02C	**LVC075(Δ)02C**
	100 02C	**LVC100(Δ)02C**
	150 03C	**LVC150(Δ)03C**
	150 04C	**LVC150(Δ)04C**
	150 04C	**LVC150(Δ)05C**

Hold Down Clamp

- Non-metallic
- M10 hardware included
- Material - Stainless Steel 316
- Sold in pairs

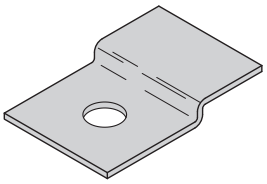

Material	Tray Size	Catalog No.
SS6	075 02C	**LZC07502C**
	100 02C	**LZC10002C**
	150 03C	**LZC15003C**
	150 04C	**LZC15004C**
	150 04C	**LZC15005C**

(Δ) Material Insert: **F** = Polyester Resin, **FZ** = Zero Halogen Resin, **FD** = F w/ Carbon Surface Veil, **FH** = FZ w/ Carbon Surface Veil

Dimensions are in millimeters unless otherwise specified.

Fiberglass Conduit to Cable Ladder Adapter

- For rigid or PVC conduit
- Standard hardware is 316 stainless steel
- Add 'N' to end of part number if non-metallic hardware is preferred

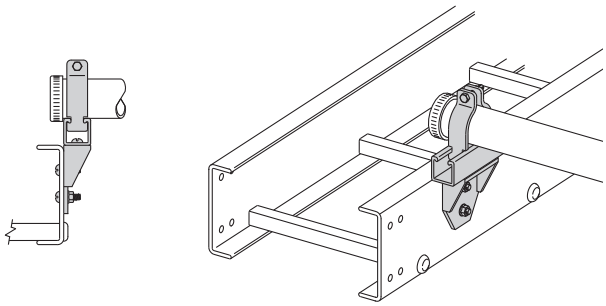

Catalog No.	Conduit Size in.	mm
9F-2008	0.50	15
9F-2009	0.75	20
9F-2010	1.00	25
9F-2011	1.25	32
9F-2012	1.50	40
9F-2013	2.00	50
9F-2014	2.50	65
9F-2015	3.00	80
9F-2016	3.50	90
9F-2017	4.00	100

Barriers

- Furnished with #10 x ½" self-drilling stainless steel screws

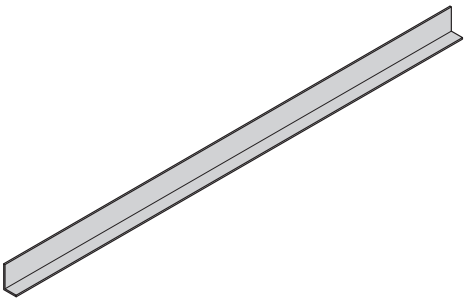

Catalog No.	Side Rail Height mm
LSD075(Δ)-3000	75
LSD100(Δ)-3000	100
LSD150(Δ)-3000	150

Resin Seal Kit

To reseal fiberglass after field modifications.

- 1 pint (473ml)

Contents: Sealant and Applicator.

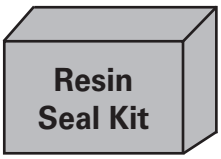

Catalog No.
RSK-101

(Δ) Material Insert: **F** = Polyester Resin, **FZ** = Zero Halogen Resin, **FD** = F w/ Carbon Surface Veil, **FH** = FZ w/ Carbon Surface Veil

Dimensions are in millimeters unless otherwise specified.

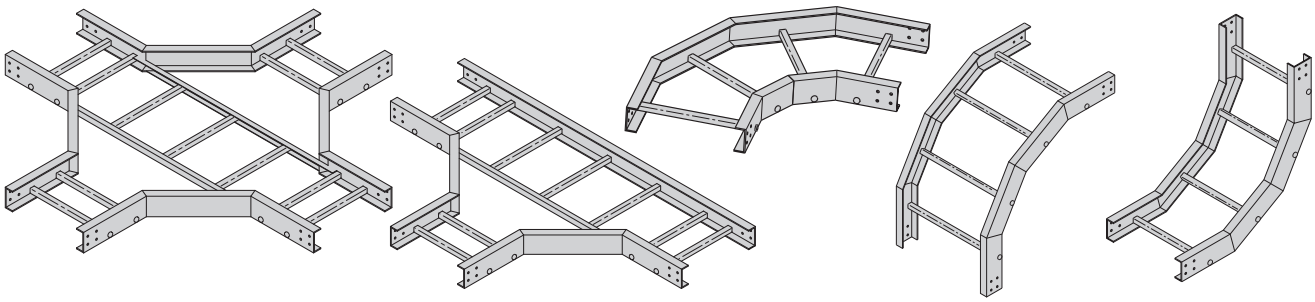

Fiberglass Cable Ladder Fittings Part Numbering

Prefix | Suffix

Example: **100 F 225 N D 03C HB - 0300 - 90 R0300**

Tray Height	Material Type	Rung Spacing	Rung Shape	Rung Orientation	Series	Type	Width	Angle	Radius
075 = 075mm **100** = 100mm **150** = 150mm	**F** = Polyester Resin **FZ** = Zero Halogen Resin **FD** = Polyester Resin w/ Carbon Surface Veil **FH** = Zero Halogen Resin w/ Carbon Surface Veil	**300** = 300mm	**N** = Non-Slotted **S** = Slotted	**D** = Down	**02C** = 75mm & 100mm **03C** = 150mm **04C** = 150mm **05C** = 150mm	**HB** = Horz. Bend **HT** = Horz. Tee* **HX** = Horz. Cross* **VO** = Vert. Outside **VI** = Vert. Inside	**0150** = 150mm **0200** = 200mm **0300** = 300mm **0450** = 450mm **0600** = 600mm **0750** = 750mm†† **0900** = 900mm††	**30** = 30° **45** = 45° **60** = 60° **90** = 90°	**R0300** = 300mm **R0600** = 600mm **R0900** = 900mm

* No angles requires on these fittings
†† Only available for 100mm & 150mm heights

Fiberglass Cable Ladder Reducer Fittings Part Numbering

Prefix | Suffix

Example: **100 F 225 N D 03C - 0300 - SR 0150**

Tray Height	Material Type	Rung Spacing	Rung Shape	Rung Orientation	Series	Width 1	Type	Width 2
075 = 075mm **100** = 100mm **150** = 150mm	**F** = Polyester Resin **FZ** = Zero Halogen Resin **FD** = Polyester Resin w/ Carbon Surface Veil **FH** = Zero Halogen Resin w/ Carbon Surface Veil	**300** = 300mm	**N** = Non-Slotted **S** = Slotted	**D** = Down	**02C** = 75mm & 100mm **03C** = 150mm **04C** = 150mm **05C** = 150mm	**0200** = 200mm **0300** = 300mm **0450** = 450mm **0600** = 600mm **0750** = 750mm†† **0900** = 900mm††	**RR** = Right Reducer **LR** = Left Reducer **SR** = Straight Reducer	**0150** = 150mm **0200** = 200mm **0300** = 300mm **0450** = 450mm **0600** = 600mm **0750** = 750mm††

* No angles requires on these fittings
†† Only available for 100mm & 150mm heights

Fiberglass

Dimensions are in millimeters unless otherwise specified.

Horizontal Bend
90° (HB)

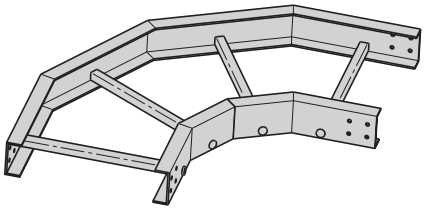

One pair of splice plates with SS6 hardware included.

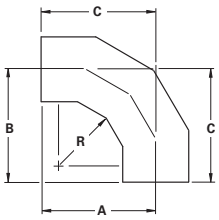

90° Mitered

- R - Bend Radius mm	Ladder Width mm	90° Horizontal Bend - Mitered Catalog No.	Dimensions A mm	B mm	C mm
300	150	**(Prefix)HB-0150-90-R0300**	525	525	525
	200	**(Prefix)HB-0200-90-R0300**	550	550	550
	300	**(Prefix)HB-0300-90-R0300**	600	600	600
	450	**(Prefix)HB-0450-90-R0300**	675	675	675
	600	**(Prefix)HB-0600-90-R0300**	750	750	750
	750††	**(Prefix)HB-0750-90-R0300**	825	825	825
	900††	**(Prefix)HB-0900-90-R0300**	900	900	900
600	150	**(Prefix)HB-0150-90-R0600**	825	825	825
	200	**(Prefix)HB-0200-90-R0600**	850	850	850
	300	**(Prefix)HB-0300-90-R0600**	900	900	900
	450	**(Prefix)HB-0450-90-R0600**	975	975	975
	600	**(Prefix)HB-0600-90-R0600**	1050	1050	1050
	750††	**(Prefix)HB-0750-90-R0600**	1125	1125	1125
	900††	**(Prefix)HB-0900-90-R0600**	1200	1200	1200
900	150	**(Prefix)HB-0150-90-R0900**	1125	1125	1125
	200	**(Prefix)HB-0200-90-R0900**	1150	1150	1150
	300	**(Prefix)HB-0300-90-R0900**	1200	1200	1200
	450	**(Prefix)HB-0450-90-R0900**	1275	1275	1275
	600	**(Prefix)HB-0600-90-R0900**	1350	1350	1350
	750††	**(Prefix)HB-0750-90-R0900**	1425	1425	1425
	900††	**(Prefix)HB-0900-90-R0900**	1500	1500	1500

†† Only available for 100mm & 150mm heights

Prefix - HB 0150 - 90 - R0300
- Radius
- Angle
- Width
- Fitting
- To complete catalog number, insert fitting prefix.

(Prefix) See page GRP-30 for catalog number prefix.
Dimensions for reference only, when critical contact factory.

Horizontal Bend 60° (HB)

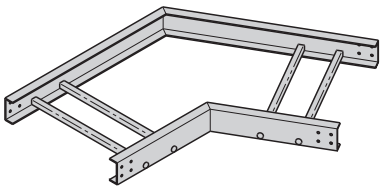

One pair of splice plates with SS6 hardware included.

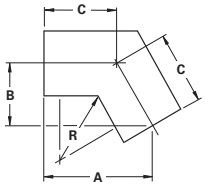

60° Mitered

- R - Bend Radius mm	Ladder Width mm	60° Horizontal Bend - Mitered Catalog No.	Dimensions A mm	B mm	C mm
300	150	**(Prefix)HB-0150-60-R0300**	550	317	367
	200	**(Prefix)HB-0200-60-R0300**	571	330	381
	300	**(Prefix)HB-0300-60-R0300**	615	355	410
	450	**(Prefix)HB-0450-60-R0300**	680	392	453
	600	**(Prefix)HB-0600-60-R0300**	745	430	496
	750††	**(Prefix)HB-0750-60-R0300**	810	467	540
	900††	**(Prefix)HB-0900-60-R0300**	875	505	583
600	150	**(Prefix)HB-0150-60-R0600**	810	467	540
	200	**(Prefix)HB-0200-60-R0600**	831	480	554
	300	**(Prefix)HB-0300-60-R0600**	875	505	583
	450	**(Prefix)HB-0450-60-R0600**	939	542	626
	600	**(Prefix)HB-0600-60-R0600**	1004	580	670
	750††	**(Prefix)HB-0750-60-R0600**	1069	617	713
	900††	**(Prefix)HB-0900-60-R0600**	1134	655	756
900	150	**(Prefix)HB-0150-60-R0900**	1069	617	713
	200	**(Prefix)HB-0200-60-R0900**	1091	630	727
	300	**(Prefix)HB-0300-60-R0900**	1134	655	756
	450	**(Prefix)HB-0450-60-R0900**	1199	692	800
	600	**(Prefix)HB-0600-60-R0900**	1264	730	843
	750††	**(Prefix)HB-0750-60-R0900**	1329	767	886
	900††	**(Prefix)HB-0900-60-R0900**	1394	805	929

†† Only available for 100mm & 150mm heights

Prefix - HB 0150 - 60 - R0300
- Radius
- Angle
- Width
- Fitting
- To complete catalog number, insert fitting prefix.

(Prefix) See page GRP-30 for catalog number prefix.
Dimensions for reference only, when critical contact factory.

Fiberglass

Dimensions are in millimeters unless otherwise specified.

Horizontal Bend
45° (HB)

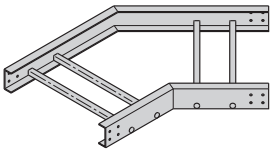

One pair of splice plates with SS6 hardware included.

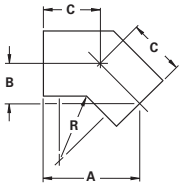

45° Mitered

- R - Bend Radius mm	Ladder Width mm	45° Horizontal Bend - Mitered Catalog No.	Dimensions A mm	B mm	C mm
300	150	**(Prefix)HB-0150-45-R0300**	521	216	305
	200	**(Prefix)HB-0200-45-R0300**	539	223	316
	300	**(Prefix)HB-0300-45-R0300**	574	238	337
	450	**(Prefix)HB-0450-45-R0300**	627	260	367
	600	**(Prefix)HB-0600-45-R0300**	680	282	399
	750††	**(Prefix)HB-0750-45-R0300**	733	304	430
	900††	**(Prefix)HB-0900-45-R0300**	786	326	461
600	150	**(Prefix)HB-0150-45-R0600**	733	304	430
	200	**(Prefix)HB-0200-45-R0600**	751	311	440
	300	**(Prefix)HB-0300-45-R0600**	786	326	461
	450	**(Prefix)HB-0450-45-R0600**	839	348	492
	600	**(Prefix)HB-0600-45-R0600**	892	370	523
	750††	**(Prefix)HB-0750-45-R0600**	945	392	554
	900††	**(Prefix)HB-0900-45-R0600**	999	414	585
900	150	**(Prefix)HB-0150-45-R0900**	945	392	554
	200	**(Prefix)HB-0200-45-R0900**	963	399	564
	300	**(Prefix)HB-0300-45-R0900**	999	414	585
	450	**(Prefix)HB-0450-45-R0900**	1052	436	616
	600	**(Prefix)HB-0600-45-R0900**	1105	458	647
	750††	**(Prefix)HB-0750-45-R0900**	1158	480	678
	900††	**(Prefix)HB-0900-45-R0900**	1211	501	709

†† Only available for 100mm & 150mm heights

Prefix - HB 0150 - 45 - R0300
- Radius
- Angle
- Width
- Fitting
- To complete catalog number, insert fitting prefix.

(Prefix) See page GRP-30 for catalog number prefix.
Dimensions for reference only, when critical contact factory.

Horizontal Bend 30° (HB)

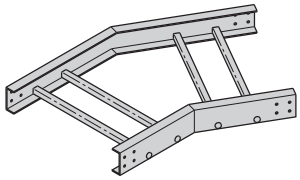

One pair of splice plates with SS6 hardware included.

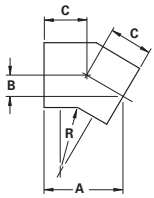

30˚ Mitered

- R - Bend Radius mm	Ladder Width mm	30˚ Horizontal Bend - Mitered Catalog No.	Dimensions A mm	B mm	C mm
300	150	**(Prefix)HB-0150-30-R0300**	467	125	250
	200	**(Prefix)HB-0200-30-R0300**	480	129	257
	300	**(Prefix)HB-0300-30-R0300**	505	135	271
	450	**(Prefix)HB-0450-30-R0300**	542	145	291
	600	**(Prefix)HB-0600-30-R0300**	580	155	311
	750††	**(Prefix)HB-0750-30-R0300**	617	165	331
	900††	**(Prefix)HB-0900-30-R0300**	655	175	351
600	150	**(Prefix)HB-0150-30-R0600**	617	165	331
	200	**(Prefix)HB-0200-30-R0600**	630	169	338
	300	**(Prefix)HB-0300-30-R0600**	655	175	351
	450	**(Prefix)HB-0450-30-R0600**	692	186	371
	600	**(Prefix)HB-0600-30-R0600**	730	196	391
	750††	**(Prefix)HB-0750-30-R0600**	767	206	411
	900††	**(Prefix)HB-0900-30-R0600**	805	216	431
900	150	**(Prefix)HB-0150-30-R0900**	767	206	411
	200	**(Prefix)HB-0200-30-R0900**	780	209	418
	300	**(Prefix)HB-0300-30-R0900**	805	216	431
	450	**(Prefix)HB-0450-30-R0900**	842	226	451
	600	**(Prefix)HB-0600-30-R0900**	880	236	472
	750††	**(Prefix)HB-0750-30-R0900**	917	246	492
	900††	**(Prefix)HB-0900-30-R0900**	955	256	512

†† Only available for 100mm & 150mm heights

Prefix - HB 0150 - 30 - R0300
- Radius
- Angle
- Width
- Fitting
- To complete catalog number, insert fitting prefix.

(Prefix) See page GRP-30 for catalog number prefix.
Dimensions for reference only, when critical contact factory.

Fiberglass

Dimensions are in millimeters unless otherwise specified.

Horizontal Tee (HT)

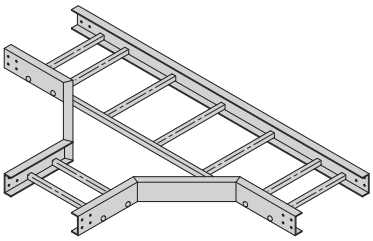

Two pair of splice plates with SS6 hardware included.

- R - Bend Radius mm	Ladder Width mm	Horizontal Tee - Mitered Catalog No.	Dimensions A mm	Dimensions B mm
300	150	**(Prefix)HT-0150-R0300**	735	1470
	200	**(Prefix)HT-0200-R0300**	760	1520
	300	**(Prefix)HT-0300-R0300**	810	1620
	450	**(Prefix)HT-0450-R0300**	885	1770
	600	**(Prefix)HT-0600-R0300**	960	1920
	750††	**(Prefix)HT-0750-R0300**	1035	2070
	900††	**(Prefix)HT-0900-R0300**	1110	2220
600	150	**(Prefix)HT-0150-R0600**	1035	2070
	200	**(Prefix)HT-0200-R0600**	1060	2120
	300	**(Prefix)HT-0300-R0600**	1110	2220
	450	**(Prefix)HT-0450-R0600**	1185	2370
	600	**(Prefix)HT-0600-R0600**	1260	2520
	750††	**(Prefix)HT-0750-R0600**	1335	2670
	900††	**(Prefix)HT-0900-R0600**	1410	2820
900	150	**(Prefix)HT-0150-R0900**	1335	2670
	200	**(Prefix)HT-0200-R0900**	1360	2720
	300	**(Prefix)HT-0300-R0900**	1410	2820
	450	**(Prefix)HT-0450-R0900**	1485	2970
	600	**(Prefix)HT-0600-R0900**	1560	3120
	750††	**(Prefix)HT-0750-R0900**	1635	3270
	900††	**(Prefix)HT-0900-R0900**	1710	3420

†† Only available for 100mm & 150mm heights

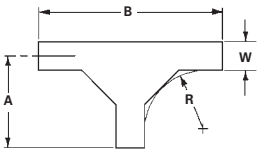

Mitered Tee

Prefix HT - 0150 - R0300
- Radius
- Width
- Fitting
- To complete catalog number, insert fitting prefix.

(Prefix) See page GRP-30 for catalog number prefix.
Dimensions for reference only, when critical contact factory.

Fiberglass

Dimensions are in millimeters unless otherwise specified.

Horizontal Cross (HX)

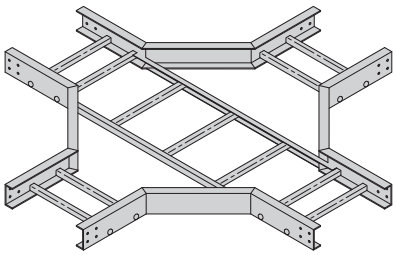

Three pair of splice plates with SS6 hardware included.

- R - Bend Radius mm	Ladder Width mm	Horizontal Cross - Mitered Catalog No.	Dimensions A mm	Dimensions B mm
300	150	**(Prefix)HX-0150-R0300**	735	1470
	200	**(Prefix)HX-0200-R0300**	760	1520
	300	**(Prefix)HX-0300-R0300**	810	1620
	450	**(Prefix)HX-0450-R0300**	885	1770
	600	**(Prefix)HX-0600-R0300**	960	1920
	750††	**(Prefix)HX-0750-R0300**	1035	2070
	900††	**(Prefix)HX-0900-R0300**	1110	2220
600	150	**(Prefix)HX-0150-R0600**	1035	2070
	200	**(Prefix)HX-0200-R0600**	1060	2120
	300	**(Prefix)HX-0300-R0600**	1110	2220
	450	**(Prefix)HX-0450-R0600**	1185	2370
	600	**(Prefix)HX-0600-R0600**	1260	2520
	750††	**(Prefix)HX-0750-R0600**	1335	2670
	900††	**(Prefix)HX-0900-R0600**	1410	2820
900	150	**(Prefix)HX-0150-R0900**	1335	2670
	200	**(Prefix)HX-0200-R0900**	1360	2720
	300	**(Prefix)HX-0300-R0900**	1410	2820
	450	**(Prefix)HX-0450-R0900**	1485	2970
	600	**(Prefix)HX-0600-R0900**	1560	3120
	750††	**(Prefix)HX-0750-R0900**	1635	3270
	900††	**(Prefix)HX-0900-R0900**	1710	3420

†† Only available for 100mm & 150mm heights

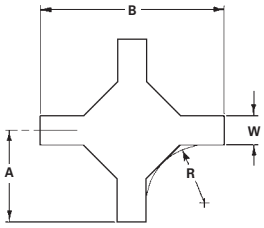

Mitered Cross

Prefix HX - 0150 - R0300
- Radius
- Width
- Fitting
- To complete catalog number, insert fitting prefix.

(Prefix) See page GRP-30 for catalog number prefix.
Dimensions for reference only, when critical contact factory.

Fiberglass

Dimensions are in millimeters unless otherwise specified.

Reducers (LR) (SR) (RR)

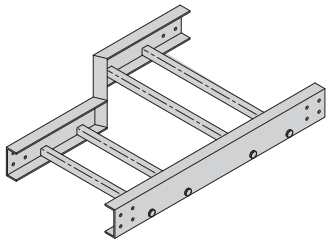

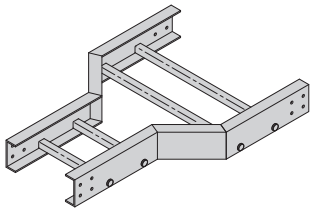

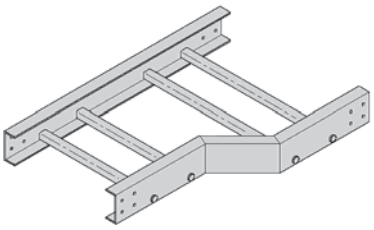

One pair of splice plates with SS6 hardware included.

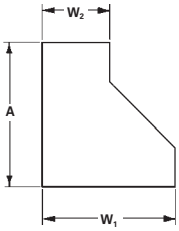

Left Reducer

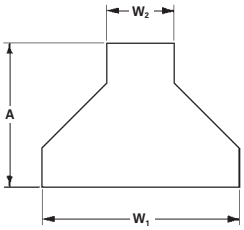

Straight Reducer

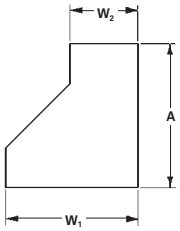

Right Reducer

075 Fittings
(Only available in W1 widths of 200mm, 300mm, 450mm & 600mm)

100 & 150 Fittings
(Available in all W1 widths shown in chart)

Reducers are all of mitered construction.

Prefix - 0300 - SR 0200
- 0200: Width2 W2
- SR: Fitting
- 0300: Width1 W1
- Prefix: To complete catalog number, insert fitting prefix.

(Prefix) See page GRP-30 for catalog number prefix.
Dimensions for reference only, when critical contact factory.

Ladder Width		Left Hand Reducer		Straight Reducer		Right Hand Reducer	
W_1 mm	W_2 mm	Catalog No.	A mm	Catalog No.	A mm	Catalog No.	A mm
200	150	**(Prefix)-0200-LR0150**	770	**(Prefix)-0200-SR0150**	745	**(Prefix)-0200-RR0150**	770
300	150	**(Prefix)-0300-LR0150**	870	**(Prefix)-0300-SR0150**	795	**(Prefix)-0300-RR0150**	870
	200	**(Prefix)-0300-LR0200**	820	**(Prefix)-0300-SR0200**	770	**(Prefix)-0300-RR0200**	820
450	150	**(Prefix)-0450-LR0150**	1020	**(Prefix)-0450-SR0150**	870	**(Prefix)-0450-RR0150**	1020
	200	**(Prefix)-0450-LR0200**	970	**(Prefix)-0450-SR0200**	845	**(Prefix)-0450-RR0200**	970
	300	**(Prefix)-0450-LR0300**	870	**(Prefix)-0450-SR0300**	795	**(Prefix)-0450-RR0300**	870
600	150	**(Prefix)-0600-LR0150**	1170	**(Prefix)-0600-SR0150**	945	**(Prefix)-0600-RR0150**	1170
	200	**(Prefix)-0600-LR0200**	1120	**(Prefix)-0600-SR0200**	920	**(Prefix)-0600-RR0200**	1120
	300	**(Prefix)-0600-LR0300**	1020	**(Prefix)-0600-SR0300**	870	**(Prefix)-0600-RR0300**	1020
	450	**(Prefix)-0600-LR0450**	870	**(Prefix)-0600-SR0450**	795	**(Prefix)-0600-RR0450**	870
750††	150	**(Prefix)-0750-LR0150**	1320	**(Prefix)-0750-SR0150**	1020	**(Prefix)-0750-RR0150**	1320
	200	**(Prefix)-0750-LR0200**	1270	**(Prefix)-0750-SR0200**	995	**(Prefix)-0750-RR0200**	1270
	300	**(Prefix)-0750-LR0300**	1170	**(Prefix)-0750-SR0300**	945	**(Prefix)-0750-RR0300**	1170
	450	**(Prefix)-0750-LR0450**	1020	**(Prefix)-0750-SR0450**	870	**(Prefix)-0750-RR0450**	1020
	600	**(Prefix)-0750-LR0600**	870	**(Prefix)-0750-SR0600**	795	**(Prefix)-0750-RR0600**	870
900††	150	**(Prefix)-0900-LR0150**	1470	**(Prefix)-0900-SR0150**	1095	**(Prefix)-0900-RR0150**	1470
	200	**(Prefix)-0900-LR0200**	1420	**(Prefix)-0900-SR0200**	1070	**(Prefix)-0900-RR0200**	1420
	300	**(Prefix)-0900-LR0300**	1320	**(Prefix)-0900-SR0300**	1020	**(Prefix)-0900-RR0300**	1320
	450	**(Prefix)-0900-LR0450**	1170	**(Prefix)-0900-SR0450**	945	**(Prefix)-0900-RR0450**	1170
	600	**(Prefix)-0900-LR0600**	1020	**(Prefix)-0900-SR0600**	870	**(Prefix)-0900-RR0600**	1020
	750	**(Prefix)-0900-LR0750**	870	**(Prefix)-0900-SR0750**	795	**(Prefix)-0900-RR0750**	870

†† Only available for 100mm & 150mm heights

Vertical Bends 90° (VO) (VI)

Vertical Outside Bend

VO

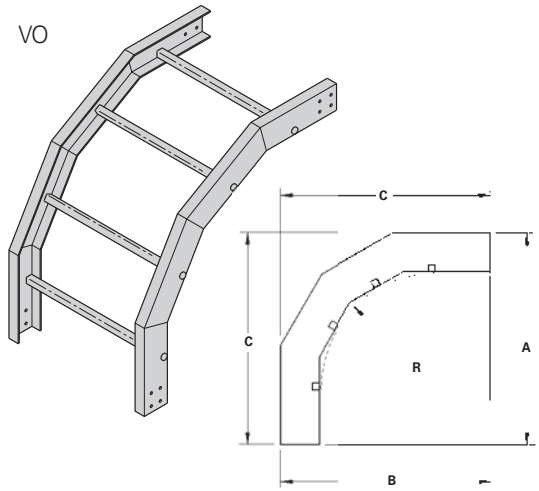

90˚ (VO) Mitered

Vertical Inside Bend

VI

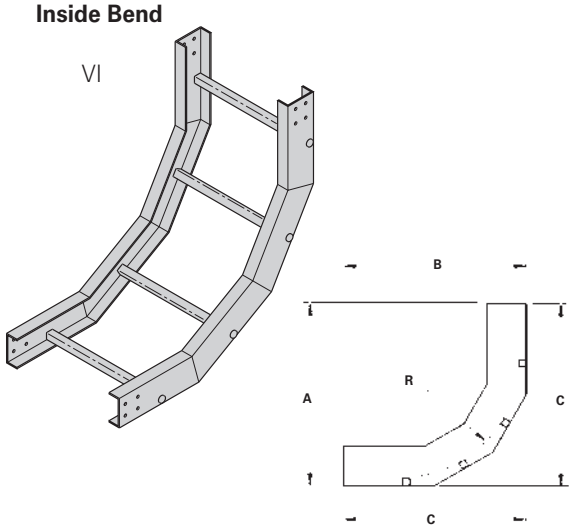

90˚ (VI) Mitered

Prefix VO - 0150 - 90 R0300
- Radius
- Angle
- Width
- Fitting
- To complete catalog number, insert fitting prefix.

One pair of splice plates with SS6 hardware included.

(Prefix) See page GRP-30 for catalog number prefix.
Dimensions for reference only, when critical contact factory.

Prefix VI - 0150 - 90 R0300
- Radius
- Angle
- Width
- Fitting
- To complete catalog number, insert fitting prefix.

- R - Bend Radius mm	Ladder Width mm	(*) Insert 'VO' for Vertical Outside Bend or 'VI' for Vertical Inside Bend. Catalog No.	90˚ Mitered					
			Vertical Outside Bend			Vertical Inside Bend		
			A mm	B mm	C mm	A mm	B mm	C mm
300	150	**(Prefix)(*)-0150-90R0300**	450	450	450	475	475	475
	200	**(Prefix)(*)-0200-90R0300**						
	300	**(Prefix)(*)-0300-90R0300**						
	450	**(Prefix)(*)-0450-90R0300**						
	600	**(Prefix)(*)-0600-90R0300**						
	750††	**(Prefix)(*)-0750-90R0300**						
	900††	**(Prefix)(*)-0900-90R0300**						
600	150	**(Prefix)(*)-0150-90R0600**	750	750	750	775	775	775
	200	**(Prefix)(*)-0200-90R0600**						
	300	**(Prefix)(*)-0300-90R0600**						
	450	**(Prefix)(*)-0450-90R0600**						
	600	**(Prefix)(*)-0600-90R0600**						
	750††	**(Prefix)(*)-0750-90R0600**						
	900††	**(Prefix)(*)-0900-90R0600**						
900	150	**(Prefix)(*)-0150-90R0900**	1050	1050	1050	1075	1075	1075
	200	**(Prefix)(*)-0200-90R0900**						
	300	**(Prefix)(*)-0300-90R0900**						
	450	**(Prefix)(*)-0450-90R0900**						
	600	**(Prefix)(*)-0600-90R0900**						
	750††	**(Prefix)(*)-0750-90R0900**						
	900††	**(Prefix)(*)-0900-90R0900**						

†† Only available for 100mm & 150mm heights

Fiberglass

Dimensions are in millimeters unless otherwise specified.

Vertical Bends
60° (VO) (VI)

Vertical Outside Bend

VO

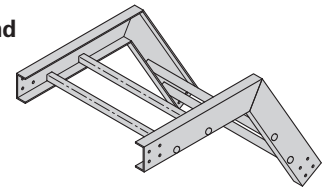

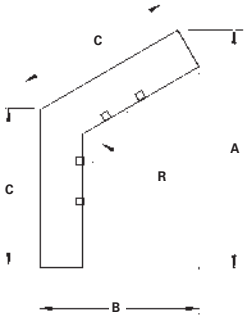

60˚ (VO) Mitered

Vertical Inside Bend

VI

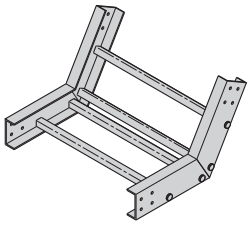

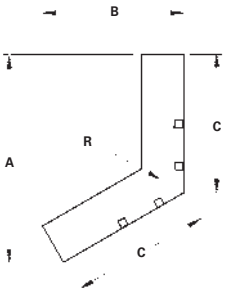

60˚ (VI) Mitered

Prefix VO - 0150 - 60 R0300
- Radius
- Angle
- Width
- Fitting
- To complete catalog number, insert fitting prefix.

One pair of splice plates with SS6 hardware included.

(Prefix) See page GRP-30 for catalog number prefix.
Dimensions for reference only, when critical contact factory.

Prefix VI - 0150 - 60 R0300
- Radius
- Angle
- Width
- Fitting
- To complete catalog number, insert fitting prefix.

- R - Bend Radius mm	Ladder Width mm	(*) Insert 'VO' for Vertical Outside Bend or 'VI' for Vertical Inside Bend. Catalog No.	60˚ Mitered					
			Vertical Outside Bend			Vertical Inside Bend		
			A mm	B mm	C mm	A mm	B mm	C mm
300	150	**(Prefix)(*)-0150-60R0300**	485	280	323	506	292	338
	200	**(Prefix)(*)-0200-60R0300**						
	300	**(Prefix)(*)-0300-60R0300**						
	450	**(Prefix)(*)-0450-60R0300**						
	600	**(Prefix)(*)-0600-60R0300**						
	750††	**(Prefix)(*)-0750-60R0300**						
	900††	**(Prefix)(*)-0900-60R0300**						
600	150	**(Prefix)(*)-0150-60R0600**	745	430	496	766	442	511
	200	**(Prefix)(*)-0200-60R0600**						
	300	**(Prefix)(*)-0300-60R0600**						
	450	**(Prefix)(*)-0450-60R0600**						
	600	**(Prefix)(*)-0600-60R0600**						
	750††	**(Prefix)(*)-0750-60R0600**						
	900††	**(Prefix)(*)-0900-60R0600**						
900	150	**(Prefix)(*)-0150-60R0900**	1004	580	670	1026	592	684
	200	**(Prefix)(*)-0200-60R0900**						
	300	**(Prefix)(*)-0300-60R0900**						
	450	**(Prefix)(*)-0450-60R0900**						
	600	**(Prefix)(*)-0600-60R0900**						
	750††	**(Prefix)(*)-0750-60R0900**						
	900††	**(Prefix)(*)-0900-60R0900**						

†† Only available for 100mm & 150mm heights

Fiberglass

Vertical Bends 45° (VO) (VI)

Vertical Outside Bend

VO

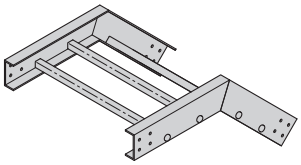

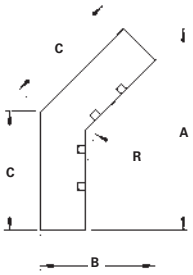

45˚ (VO) Mitered

Vertical Inside Bend

VI

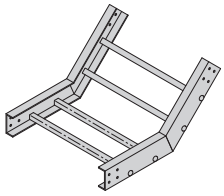

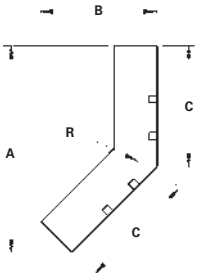

45˚ (VI) Mitered

Prefix VO - 0150 - 45 R0300
- Radius
- Angle
- Width
- Fitting
- To complete catalog number, insert fitting prefix.

One pair of splice plates with SS6 hardware included.

(Prefix) See page GRP-30 for catalog number prefix.
Dimensions for reference only, when critical contact factory.

Prefix VI - 0150 - 45 R0300
- Radius
- Angle
- Width
- Fitting
- To complete catalog number, insert fitting prefix.

- R - Bend Radius mm	Ladder Width mm	(*) Insert 'VO' for Vertical Outside Bend or 'VI' for Vertical Inside Bend. Catalog No.	45˚ Mitered					
			Vertical Outside Bend			Vertical Inside Bend		
			A mm	B mm	C mm	A mm	B mm	C mm
300	150	**(Prefix)(*)-0150-45R0300**	468	194	275	486	201	285
	200	**(Prefix)(*)-0200-45R0300**						
	300	**(Prefix)(*)-0300-45R0300**						
	450	**(Prefix)(*)-0450-45R0300**						
	600	**(Prefix)(*)-0600-45R0300**						
	750††	**(Prefix)(*)-0750-45R0300**						
	900††	**(Prefix)(*)-0900-45R0300**						
600	150	**(Prefix)(*)-0150-45R0600**	680	282	399	698	289	409
	200	**(Prefix)(*)-0200-45R0600**						
	300	**(Prefix)(*)-0300-45R0600**						
	450	**(Prefix)(*)-0450-45R0600**						
	600	**(Prefix)(*)-0600-45R0600**						
	750††	**(Prefix)(*)-0750-45R0600**						
	900††	**(Prefix)(*)-0900-45R0600**						
900	150	**(Prefix)(*)-0150-45R0900**	892	370	523	910	377	533
	200	**(Prefix)(*)-0200-45R0900**						
	300	**(Prefix)(*)-0300-45R0900**						
	450	**(Prefix)(*)-0450-45R0900**						
	600	**(Prefix)(*)-0600-45R0900**						
	750††	**(Prefix)(*)-0750-45R0900**						
	900††	**(Prefix)(*)-0900-45R0900**						

†† Only available for 100mm & 150mm heights

Fiberglass

Dimensions are in millimeters unless otherwise specified.

Vertical Bends
30° (VO) (VI)

Vertical Outside Bend

VO

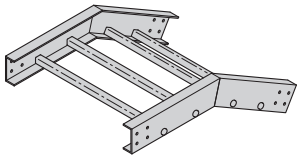

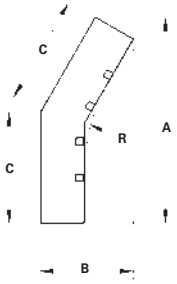

30˚ (VO) Mitered

Vertical Inside Bend

VI

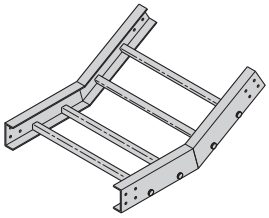

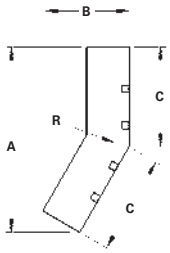

30˚ (VI) Mitered

Prefix VO - 0150 - 30 R0300
- Radius
- Angle
- Width
- Fitting
- To complete catalog number, insert fitting prefix.

One pair of splice plates with SS6 hardware included.

(Prefix) See page GRP-30 for catalog number prefix.
Dimensions for reference only, when critical contact factory.

Prefix VI - 0150 - 30 R0300
- Radius
- Angle
- Width
- Fitting
- To complete catalog number, insert fitting prefix.

- R - Bend Radius mm	Ladder Width mm	(*) Insert 'VO' for Vertical Outside Bend or 'VI' for Vertical Inside Bend. Catalog No.	30˚ Mitered					
			Vertical Outside Bend			Vertical Inside Bend		
			A mm	B mm	C mm	A mm	B mm	C mm
300	150	**(Prefix)(*)-0150-30R0300**	430	115	230	442	119	237
	200	**(Prefix)(*)-0200-30R0300**						
	300	**(Prefix)(*)-0300-30R0300**						
	450	**(Prefix)(*)-0450-30R0300**						
	600	**(Prefix)(*)-0600-30R0300**						
	750††	**(Prefix)(*)-0750-30R0300**						
	900††	**(Prefix)(*)-0900-30R0300**						
600	150	**(Prefix)(*)-0150-30R0600**	580	155	311	592	159	318
	200	**(Prefix)(*)-0200-30R0600**						
	300	**(Prefix)(*)-0300-30R0600**						
	450	**(Prefix)(*)-0450-30R0600**						
	600	**(Prefix)(*)-0600-30R0600**						
	750††	**(Prefix)(*)-0750-30R0600**						
	900††	**(Prefix)(*)-0900-30R0600**						
900	150	**(Prefix)(*)-0150-30R0900**	730	196	392	742	199	398
	200	**(Prefix)(*)-0200-30R0900**						
	300	**(Prefix)(*)-0300-30R0900**						
	450	**(Prefix)(*)-0450-30R0900**						
	600	**(Prefix)(*)-0600-30R0900**						
	750††	**(Prefix)(*)-0750-30R0900**						
	900††	**(Prefix)(*)-0900-30R0900**						

†† Only available for 100mm & 150mm heights

Covers

Material Thickness: ⅛" (3mm)

Cover Length: 10' (3m)

Standard Mounting Hardware:
(10 each) #10 x ½" stainless, self drilling screws provided with each section

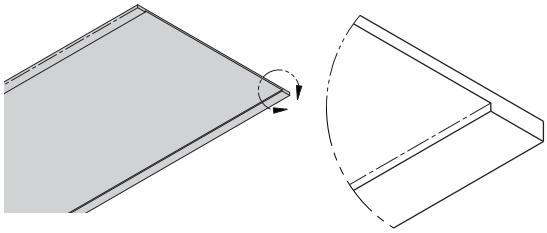

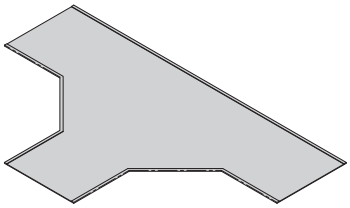

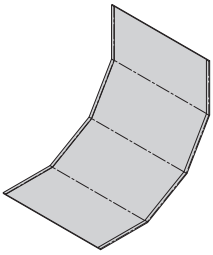

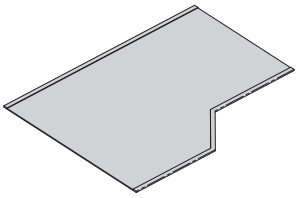

Fiberglass Cable Ladder Straight Section Covers Part Numbering

Prefix / Suffix

Example: **CIF S F SS - 150 - 3000**

Tray Type	Top Style	Material	Type	Width	Length
CIF = Straight Section Cable Ladder Cover Fiberglass	**S** = Solid	**F** = Polyester Resin **FZ** = Zero Halogen Resin **FD** = Polyester Resin w/ Carbon Surface Veil **FH** = Zero Halogen Resin w/ Carbon Surface Veil	**SS** = Straight Section	**150** = 150mm **200** = 200mm **300** = 300mm **450** = 450mm **600** = 600mm **750** = 750mm **900** = 900mm	**3000** = 3000mm

Fiberglass Cable Ladder Fitting Covers Part Numbering

Prefix / Suffix

Example: **CCF S F VO - 0150 - 90 R0600 - 075** **(side rail height)**

Tray Type	Top Style	Material
CCF = Ladder Fitting Cover Fiberglass	**S** = Solid	**F** = Polyester Resin **FZ** = Zero Halogen Resin **FD** = Polyester Resin w/ Carbon Surface Veil **FH** = Zero Halogen Resin w/ Carbon Surface Veil

HB **Insert HB Suffix from pages GRP-31 – GRP-34**
HT **Insert HT Suffix from page GRP-35**
HX **Insert HX Suffix from page GRP-36**
LR **Insert LR Suffix from page GRP-37**
SR **Insert SR Suffix from page GRP-37**
RR **Insert RR Suffix from page GRP-37**
VI **Insert VI Suffix from pages GRP-38 – GRP-41**
VO **Insert VO Suffix from pages GRP-38 – GRP-41 & Side Rail Height**

Fiberglass

Dimensions are in millimeters unless otherwise specified.

Quantity of Standard Cover Clamps Required

Straight Section 3000mm.....4 pcs.
Straight Section 6000mm.....8 pcs.
Horizontal/Vertical Bends .....4 pcs.
Tees .....6 pcs.
Crosses.....8 pcs.

Note: When using the Wrap Around Cover Clamp, only one-half the number of clamps stated above is required.

Standard Cover Clamp

- Used to clamp cover on side rail.
- Furnished in pairs with hardware.

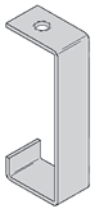

Catalog No.	Side Rail Height	
	in.	mm
LCF075	3	76
LCF100	4	101
LCF150	6	152

Standard Raised Cover Clamp

- Used to clamp and hold a cover on and above the side rail.
- Furnished in pairs with hardware.

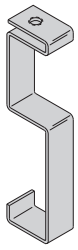

Catalog No.	Side Rail Height	
	in.	mm
LCR075	3	76
LCR100	4	101
LCR150	6	152

Wrap Around Cover Clamp

Recommended for outdoor service.
- W = ladder width
- Heavy duty cover clamp available for flat covers only

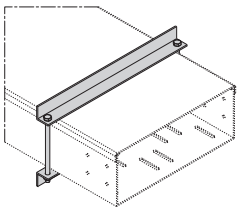

Catalog No.	Side Rail Height	
	in.	mm
PWCC075(Δ)-(W)	3	76
PWCC100(Δ)-(W)	4	101
PWCC150(Δ)-(W)	6	152

Thermo Plastic Drive Rivet

Shipped in packages of 25 pcs.

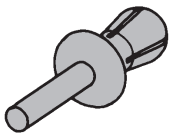

Catalog No.
TPDR

Material Designations

(Δ) Insert one of the following material designations from chart on page GRP-42 when required.

Dimensions are in millimeters unless otherwise specified.

Load Data

Fiberglass Cable Ladder and Cable Tray are offered in four versions for applications as follows:

Standard Series	Resin Type	Meets
P050F, P100F, 075F02C, 100F02C, 150F03C, 150F04C, 150F05C	Fire Retardant Polyester Gray color	ASTM E84 Class 1 UL94 VO Good Corrosion Resistance in most environments
Zero Halogen		
P050FZ, P100FZ, 075FZ02C, 100FZ02C, 150FZ03C, 150FZ04C, 150FZ05C	Fire Retardant Zero Halogen Gray color	ASTM E84 Class 1 UL94 VO Smoke Generation and Toxicity for Mass Transit Requirements and Off Shore application
Dis-Stat		
P050FD, P100FD, 075FD02C, 100FD02C, 150FD03C, 150FD04C, 150FD05C	Fire Retardant Dis-Stat Polyester Gray color	ASTM E84 Class 1 UL94 VO ASTM D257-99 Dissipates Static Charge
Dis-Stat / Zero Halogen		
P050FH, P100FH, 075FH02C, 100FH02C, 150FH03C, 150FH04C, 150FH05C	Fire Retardant Zero Halogen / Dis-Stat Gray color	ASTM E84 Class 1 UL94 VO ASTM D257-99 Dissipates Static Charge Smoke Generation and Toxicity for Mass Transit Requirements and Off Shore application

Effect of Temperature

Strength properties of reinforced plastics are reduced when continuously exposed to elevated temperatures. Working loads shall be reduced based on the following:

Temperature in Degrees F	Approximate Percent of Strength
75	100
100	90
125	78
150	68
175	60
200	52

NEMA Standard 8-10-1986
If unusual temperature conditions exist, the manufacturer should be consulted.
Authorized Engineering information 8-20-1986

Typical Properties of Pultruded Components

B-Line Fiberglass Cable Ladder systems are manufactured from glass fiber-reinforced plastic shapes that meet ASTM E-84, Smoke Density rating for polyester of 680, for vinyl ester 1025, Class 1 Flame Rating and self-extinguishing requirements of ASTM D-635. A surface veil is applied during pultrusion to insure a resin-rich surface and ultraviolet resistance.

Flame Resistance (FTMS 406-2023) ign/burn, seconds	75/75
Intermittent Flame Test (HLT-15), rating	100
Flammability Test (ASTM D635) Ignition Burning Time	 none 0 sec.

Properties	Test Method	Unit/ Value	3" & 4" Cable Ladder, Cable Channel		6" Cable Ladder	
			Longitudinal	Transverse	Longitudinal	Transverse
Density	ASTM D1505	lbs/in³	.058-.062	-	.072 - .076	-
Coefficient of Thermal Expansion	ASTM D696	in/in/°F	5.0×10^{-6}	-	5.0×10^{-6}	-
Water Absorption	ASTM D570	Max %	0.5	-	0.5	-
Dielectic Strength	ASTM D149	V/mil (vpm)	200	-	200	-
Flammability Classification	UL94	VO	-	-	-	-
Flame Spread	ASTM E-84	20 Max	-	-	-	-

Fiberglass

Dimensions are in millimeters unless otherwise specified.

Corrosion Guide

The information shown in this corrosion guide is based on full immersion laboratory tests and data generated from resin manufacturer's data. It should be noted that in some of the environments listed, splashes and spill situations may result in a more corrosive situation than indicated due to the evaporation of water. Regular wash down is recommended in these situations.
All data represents the best available information and is believed to be correct. The data should not be construed as a warranty of performance for that product as presented in these tables. User tests should be performed to determine suitability of service if there is any doubt or concern. Such variables as concentration, temperature, time and combined chemical effects of mixtures of chemicals make it impossible to specify the exact suitability of fiber reinforced plastics in all environments. B-Line will be happy to supply material samples for testing. These recommendations should only be used as a guide and B-Line does not take responsibility for design or suitability of materials for service intended. In no event will B-Line be liable for any consequential or special damages for any defective material or workmanship including without limitation, labor charge, other expense or damage to properties resulting from loss of materials or profits or increased expenses of operations.

Chenical Environment	Polyester		Vinyl Ester	
	Max Wt. %	Max Oper. Temp °F	Max Wt. %	Max Oper. Temp °F
Acetic Acid	10	190	10	210
Acetic Acid	50	125	50	180
Acetone	N/R	N/R	100	75
Aluminum Chloride	SAT	170	SAT	200
Aluminum Hydroxide	SAT	160	SAT	170
Aluminum Nitrate	SAT	150	SAT	170
Aluminum Sulfate	SAT	180	SAT	200
Ammonium Chloride	SAT	170	SAT	190
Ammonium Hydroxide	1	100	10	150
Ammonium Hydroxide	28	N/R	28	100
Ammonium Carbonate	N/R	N/R	SAT	150
Ammonium Bicarbonate	15	125	SAT	130
Ammonium Nitrate	SAT	160	SAT	190
Ammonium Persulfate	SAT	N/R	SAT	150
Ammonium Sulfate	SAT	170	SAT	200
Amyl Alcohol	ALL	N/R	ALL	90
Amyl Alcohol Vapor	-	140	-	120
Benzene	N/R	N/R	100	140
Benzene Sulfonic Acid	25	110	SAT	200
Benzoic Acid	SAT	150	SAT	200
Benzoyl Alcohol	100	N/R	100	N/R
Borax	SAT	170	SAT	200
Calcium Carbonate	SAT	170	SAT	200
Calcium Chloride	SAT	170	SAT	200
Calcium Hydroxide	25	70	25	165
Calcium Nitrate	SAT	180	SAT	200
Calcium Sulfate	SAT	180	SAT	200
Carbon Disulfide	N/R	N/R	N/R	N/R
Carbonic Acid	SAT	130	SAT	180
Carbon Dioxide Gas	-	200	-	200
Carbon Monoxide Gas	-	200	-	200
Carbon Tetrachloride	N/R	N/R	100	75
Chlorine, Dry Gas	-	140	-	170
Chlorine, Wet Gas	-	N/R	-	180
Chlorine Water	SAT	80	SAT	180

Chenical Environment	Polyester		Vinyl Ester	
	Max Wt. %	Max Oper. Temp °F	Max Wt. %	Max Oper. Temp °F
Chromic Acid	5	70	10	120
Citric Acid	SAT	170	SAT	200
Copper Chloride	SAT	170	SAT	200
Copper Cyanide	SAT	170	SAT	200
Copper Nitrate	SAT	170	SAT	200
Crude Oil, Sour	100	170	100	200
Cyclohexane	N/R	N/R	N/R	N/R
Cyclohexane, Vapor	ALL	100	ALL	130
Diesel Fuel	100	160	100	180
Diethyl Ether	N/R	N/R	N/R	N/R
Dimethyl Phthalate	N/R	N/R	N/R	N/R
Ethanol	50	75	50	90
Ethyl Acetate	N/R	N/R	N/R	N/R
Ethylene Chloride	N/R	N/R	N/R	N/R
Ethylene Glycol	100	90	100	200
Fatty Acids	SAT	180	SAT	200
Ferric Chloride	SAT	170	SAT	200
Ferric Nitrate	SAT	170	SAT	200
Ferric Sulfate	SAT	170	SAT	200
Ferrous Chloride	SAT	170	SAT	200
Fluoboric Acid	N/R	N/R	SAT	165
Fluosilicic Acid	N/R	N/R	SAT	70
Formaldehyde	50	75	50	100
Formic Acid	N/R	N/R	50	100
Gasoline	100	80	100	150
Glucose	100	170	100	200
Glycerine	100	150	100	200
Heptane	100	110	100	120
Hexane	100	90	100	130
Hydrobromic Acid	50	120	50	120
Hydrochloric Acid	10	150	10	200
Hydrochloric Acid	20	140	20	190
Hydrochloric Acid	37	75	37	95
Hydrofluoric Acid	N/R	N/R	15	80
Hydrogen Bromide, Dry	100	190	100	200

-: No Information Available N/R: Not Recommended SAT: Saturated Solution FUM: Fumes

Corrosion Guide

Chenical Environment	Polyester		Vinyl Ester	
	Max Wt. %	Max Oper. Temp °F	Max Wt. %	Max Oper. Temp °F
Hydrogen Bromide, Wet	100	75	100	130
Hydrogen Chloride	-	120	-	200
Hydrogen Peroxide	5	100	30	100
Hydrogen Sulfide, Dry	100	170	100	210
Hydrogen Sulfide, Wet	100	170	100	210
Hypochlorous Acid	20	80	20	150
Isopropyl Alcohol	N/R	N/R	15	80
Kerosene	100	140	100	180
Lactic Acid	SAT	170	SAT	200
Lead Acetate	SAT	170	SAT	200
Lead Chloride	SAT	140	SAT	200
Lead Nitrate	SAT	-	SAT	200
Linseed Oil	100	150	100	190
Lithium Chloride	SAT	150	SAT	190
Magnesium Carbonate	SAT	140	SAT	170
Magnesium Chloride	SAT	170	SAT	200
Magnesium Hydroxide	SAT	150	SAT	190
Magnesium Nitrate	SAT	140	SAT	180
Magnesium Sulfate	SAT	170	SAT	190
Mercuric Chloride	SAT	150	SAT	190
Mercurous Chloride	SAT	140	SAT	180
Methyl Ethyl Ketone	N/R	N/R	N/R	N/R
Mineral Oils	100	170	100	200
Monochlorobenzene	N/R	N/R	N/R	N/R
Naphtha	100	140	100	170
Nickel Chloride	SAT	170	SAT	200
Nickel Nitrate	SAT	170	SAT	200
Nickel Sulfate	SAT	170	SAT	200
Nitric Acid	5	140	5	150
Nitric Acid	20	70	20	100
Oleic Acid	100	170	100	190
Oxalic Acid	ALL	75	ALL	120
Paper Mill Liquors	-	100	-	120
Perchlorethylene	100	N/R	100	N/R
Perchloric Acid	N/R	N/R	10	150
Perchloric Acid	N/R	N/R	30	80
Phosphoric Acid	10	160	10	200
Phosphoric Acid	100	120	100	200
Potassium Aluminum Sulfate	SAT	170	SAT	200
Potassium Bicarbonate	50	80	50	140
Potassium Carbonate	10	N/R	10	120
Potassium Chloride	SAT	170	SAT	200
Potassium Dichromate	SAT	170	SAT	200

Chenical Environment	Polyester		Vinyl Ester	
	Max Wt. %	Max Oper. Temp °F	Max Wt. %	Max Oper. Temp °F
Potassium Hydroxide	N/R	N/R	25	150
Potassium Nitrate	SAT	170	SAT	200
Potassium Permanganate	100	80	100	210
Potassium Sulfate	SAT	170	SAT	200
Propylene Glycol	ALL	170	ALL	200
Phthalic Acid	-	-	SAT	200
Sodium Acetate	SAT	160	SAT	200
Sodium Benzoate	SAT	170	SAT	200
Sodium Bicarbonate	SAT	160	SAT	175
Sodium Bisulfate	ALL	170	ALL	200
Sodium Bromide	ALL	170	ALL	200
Sodium Carbonate	10	80	35	160
Sodium Chloride	SAT	170	SAT	200
Sodium Cyanide	SAT	170	SAT	200
Sodium Hydroxide	N/R	N/R	50	150
Sodium Hydroxide	N/R	N/R	25	80
Sodium Hypochloride	N/R	N/R	10	150
Sodium Monophosphate	SAT	170	SAT	200
Sodium Nitrate	SAT	170	SAT	200
Sodium Sulfate	SAT	170	SAT	200
Sodium Thiosulfate	ALL	100	ALL	120
Stannic Chloride	SAT	160	SAT	190
Styrene	N/R	N/R	N/R	N/R
Sulfated Detergent	0/50	170	0/50	200
Sulfur Dioxide	100	80	100	200
Sulfur Trioxide	100	80	100	200
Sulfuric Acid	93	N/R	93	N/R
Sulfuric Acid	50	N/R	50	180
Sulfuric Acid	25	75	25	190
Sulfurous Acid	SAT	80	N/R	N/R
Tartaric Acid	SAT	170	SAT	200
Tetrachloroethylene	N/R	N/R	FUM	75
Toluene	N/R	N/R	N/R	N/R
Trisodium Phosphate	N/R	N/R	SAT	175
Urea	SAT	130	SAT	140
Vinegar	100	170	100	200
Water, Distilled	100	170	100	190
Water, Tap	100	170	100	190
Water, Sea	SAT	170	SAT	190
Xylene	N/R	N/R	N/R	N/R
Zinc Chloride	SAT	170	SAT	200
Zinc Nitrate	SAT	170	SAT	200
Zinc Sulfate	SAT	170	SAT	200

-: No Information Available N/R: Not Recommended SAT: Saturated Solution FUM: Fumes

Cable Ladder Installation Guide

Installation of B-Line fiberglass cable ladder should be made in accordance with the standards set by NEMA Publication VE-2, Cable Ladder Installation Guide, and National Electrical Code, Article 318.

- Always observe common safety practices when assembling ladder and fittings. Installations generally require some field cutting. Dust created during fabrication presents no serious health hazard, but skin irritation may be experienced by some workers.
- Operators of saws and drills should wear masks, long sleeve shirts or coveralls.
- Fabrication with fiberglass is relatively easy and comparable to working with wood. Ordinary hand tools may be used in most cases.
- Avoid excessive pressure when sawing or drilling. Too much force can rapidly dull tools and also produce excessive heat which softens the bonding resin in the fiberglass resulting in a ragged edge rather than a clean-cut edge.
- Field cutting is simple and can be accomplished with a circular power saw with an abrasive cut-off wheel (masonry type) or hack saw (24 to 32 teeth per inch).
- Drill fiberglass as you would drill hard wood. Standard twist drills are more than adequate.
- Any surface that has been drilled, cut, sanded or otherwise broken, **must be sealed** with a compatible resin. (see page GRP-29)
- Carbide tipped saw blades and drill bits are recommended when cutting large quantities.
- Support the fiberglass material firmly during cutting operations to keep material from shifting which may cause chipping at the cut edge.
- Each ladder section length should be equal to or greater than the support span.
- When possible, the splice should be located at quarter span.
- Fittings should be supported as per NEMA FG-1.

Cable Ladder Support Locations For Fittings

per NEMA VE-2 Installation Guide

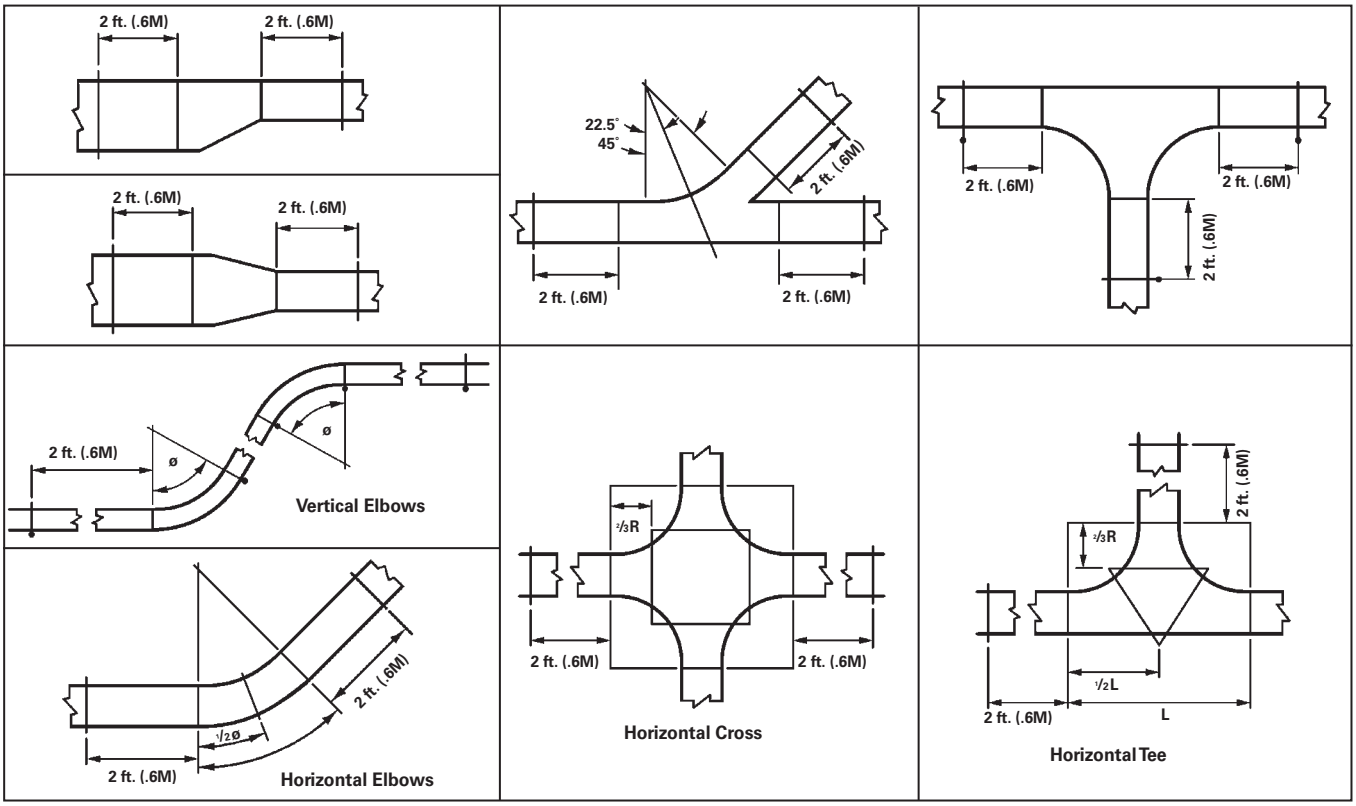

Ø = 30˚, 45˚, 60˚, 90˚

Trefoil Cable Cleat with LSF Pad

1. Recommended for installations where the highest levels of short circuit withstand are required.
2. Short circuit current tested in accordance with BS EN 50368:2003 standard.
3. Available for single and trefoil cable applications.
4. LSF-pad incorporate an integral low smoke, low fume, zero halogen pad.
5. Hardware to attach cleat to rung attachment bracket is included with cleat. Bracket must be ordered separately.

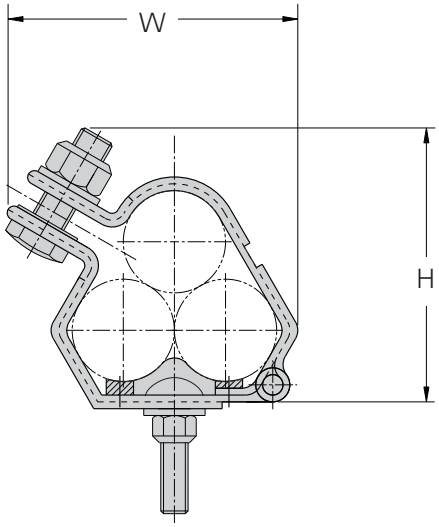

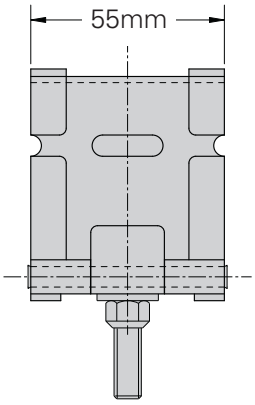

BS EN 50368:2003 (Cable Cleats for Electric Installations) Classification	
Cleat Type	Composite
Resistance to Electromechanical Force	130 kA peak / 50 kA RMS 600 mm spacing
Lateral Load Test	3.439 kg average
Axial Load Test	Pass
Operating Temperature Range	-40°C to +60°C
Impact Resistance	Very Heavy
Needle Flame Test	30 seconds

Technical Specifications	
Frame	50mm x 2mm Marine grade, Non-magnetic 316L
Closure Hardware	Captive 316 Stainless Steel M8 or M10 (M12 available) bolt and nylon-lock nut (Optional Hex Flange Lock Nut available)
Integral Pad	Low Smoke, Low Fume, Zero Halogen
Tools Required	Impact Wrench
Mounting Bolt	Provided with Cable Cleat

	Cable Range (mm)		Dimensions (mm)	
Part No.	Min. Dia.	Max. Dia.	H	W
9SS6-CCT1323	13	22	74	66
9SS6-CCT2125	21	25	77	70
9SS6-CCT2329	23	29	81	78
9SS6-CCT2531	25	31	84	81
9SS6-CCT2733	27	33	86	83
9SS6-CCT2935	29	35	90	89
9SS6-CCT3238	32	38	94	95
9SS6-CCT3541	35	41.5	98	100
9SS6-CCT3844	38	44.5	101	104
9SS6-CCT4248	42	48	105	111
9SS6-CCT4551	45	51	109	117
9SS6-CCT4753	47	53	111	120
9SS6-CCT4955	49	55	114	124
9SS6-CCT5157	51	57	116	127
9SS6-CCT5359	53	59	119	133
9SS6-CCT5561	55	61	127	137
9SS6-CCT5763	57	63	126	140
9SS6-CCT5965	59	65	128	144
9SS6-CCT6167	61	67	132	147
9SS6-CCT6369	63	69	136	150

	Cable Range (mm)		Dimensions (mm)	
Part No.	Min. Dia.	Max. Dia.	H	W
9SS6-CCT6571	65	71	140	153
9SS6-CCT6773	67	73	143	156
9SS6-CCT6975	69	75	147	160
9SS6-CCT7177	71	77	151	163
9SS6-CCT7379	73	79	154	166
9SS6-CCT7581	75	81	158	169
9SS6-CCT7783	77	83	161	173
9SS6-CCT7985	79	85	164	176
9SS6-CCT8187	81	87	169	179
9SS6-CCT8389	83	89	173	182
9SS6-CCT8692	86	92	177	187
9SS6-CCT8896	88	96	181	192
9SS6-CCT9199	91	99	185	196
9SS6-CCT96103	96	103	190	201
9SS6-CCT99107	99	107	194	202
9SS6-CCT103111	103	111	199	204
9SS6-CCT107115	107	115	203	208
9SS6-CCT111119	111	119	208	213
9SS6-CCT115123	115	123	213	217
9SS6-CCT119128	119	128	217	221

Single Cable Cleat with LSF Pad

1. Recommended for installations where the highest levels of short circuit withstand are required.
2. Short circuit current tested in accordance with BS EN 50368:2003 standard.
3. Available for single and trefoil cable applications.
4. LSF-pad incorporate an integral low smoke, low fume, zero halogen pad.
5. Hardware to attach cleat to rung attachment bracket is included with cleat. Bracket must be ordered separately.

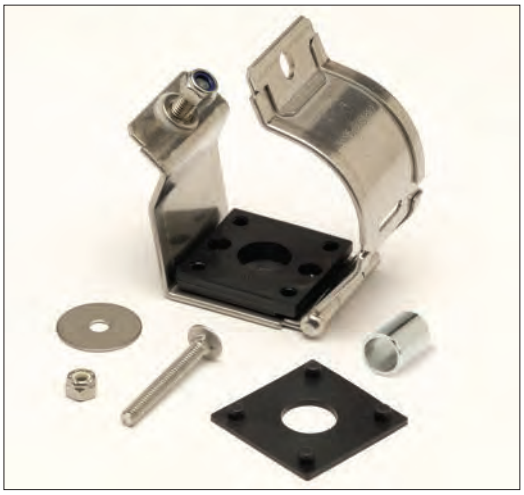

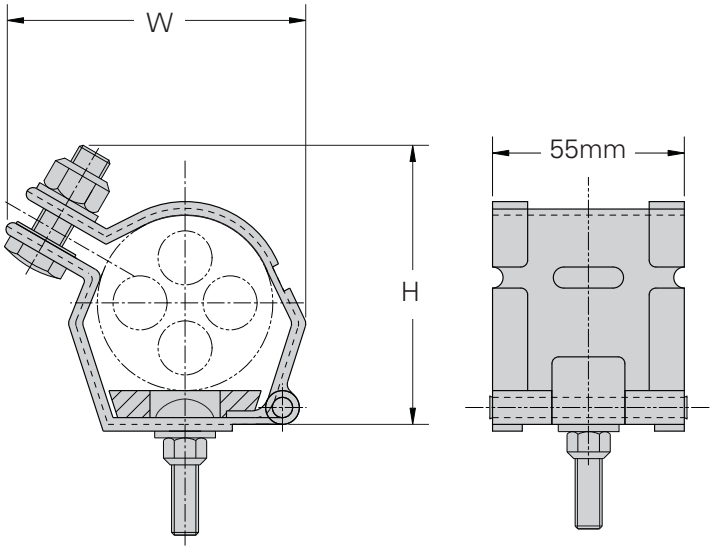

BS EN 50368:2003 (Cable Cleats for Electric Installations) Classification	
Cleat Type	Composite
Resistance to Electromechanical Force	130 kA peak / 50 kA RMS 600 mm spacing
Lateral Load Test	3.439 kg average
Axial Load Test	Pass
Operating Temperature Range	-40°C to +60°C
Impact Resistance	Very Heavy
Needle Flame Test	30 seconds

Technical Specifications	
Frame	50mm x 2mm Marine grade, Non-magnetic 316L
Closure Hardware	Captive 316 Stainless Steel M8 or M10 (M12 available) bolt and nylon-lock nut (Optional Hex Flange Lock Nut available)
Integral Pad	Low Smoke, Low Fume, Zero Halogen
Tools Required	Impact Wrench
Mounting Bolt	Provided with Cable Cleat

	Cable Range (mm)		Dimensions (mm)	
Part No.	Min. Dia.	Max. Dia.	H	W
9SS6-CCS2832	28	32	61	55
9SS6-CCS3034	30	34	63	57
9SS6-CCS3236	32	36	65	59
9SS6-CCS3438	34	38	67	61
9SS6-CCS3640	36	40	17	63
9SS6-CCS3842	38	42	69	65
9SS6-CCS4044	40	44	71	67
9SS6-CCS4246	42	46	72	69
9SS6-CCS4448	44	48	74	71
9SS6-CCS4650	46	50	75	73
9SS6-CCS4852	48	52	77	75
9SS6-CCS5054	50	54	79	77
9SS6-CCS5256	52	56	80	79
9SS6-CCS5458	54	58	81	81
9SS6-CCS5660	56	60	83	83
9SS6-CCS5862	58	62	85	85
9SS6-CCS6064	60	64	86	87
9SS6-CCS6266	62	66	88	89
9SS6-CCS6468	64	68	90	91
9SS6-CCS6670	66	70	91	93

	Cable Range (mm)		Dimensions (mm)	
Part No.	Min. Dia.	Max. Dia.	H	W
9SS6-CCS6872	68	72	93	95
9SS6-CCS7074	70	74	95	97
9SS6-CCS7276	72	76	97	99
9SS6-CCS7478	74	78	99	101
9SS6-CCS7680	76	80	101	103
9SS6-CCS7682	76	82	103	105
9SS6-CCS8084	80	84	105	107
9SS6-CCS8286	82	86	107	109
9SS6-CCS8488	84	88	109	111
9SS6-CCS8690	86	90	110	113
9SS6-CCS8892	88	92	113	117
9SS6-CCS9094	90	94	116	120
9SS6-CCS9296	92	96	126	127
9SS6-CCS94104	94	104	135	133
9SS6-CCS100112	100	112	140	139
9SS6-CCS106118	106	118	145	145
9SS6-CCS112124	112	124	153	155
9SS6-CCS118130	118	130	162	165
9SS6-CCS127139	127	139	161	167
9SS6-CCS132144	132	144	165	173
9SS6-CCS138150	138	150	170	179

Step 1: Know Your Cables

- What type of cable is being used?
  - Single or Multi-conductor
- What is the outside diameter of the cable(s)?
- What is the cable arrangement (single conductor cables only)?
  - Flat or Trefoil
- If a ground wire will be installed within the cleat, you will need the ground wire outside diameter.

Step 2: Know Your System

- What is the available short circuit current (RMS or i_p (peak))?
- What type of B-Line cable ladder is installed?

Step 3: Select Your Cable Cleats

- See Pages CC-2 & CC-3

Step 4: Select Your Mounting Bracket

Mounting brackets are used to attach cable cleats to the rungs of the ladder type cable ladders. Your ladder type will determine the mounting bracket used.

B-Line Ladder Types	Mounting Bracket
Aluminum welded rung ladders with standard rungs. Steel Series 2, 3, 4 or 5, ladders with standard rungs Fiberglass ladders with standard rungs	**9SS6-CCB-C**
Steel ladders with strut rungs Aluminum ladders with "Marine Rungs"	**9SS6-CCB-B**
Steel Series 1 ladders with standard rungs	**9SS6-CCB-A**

9SS6-CCB-A

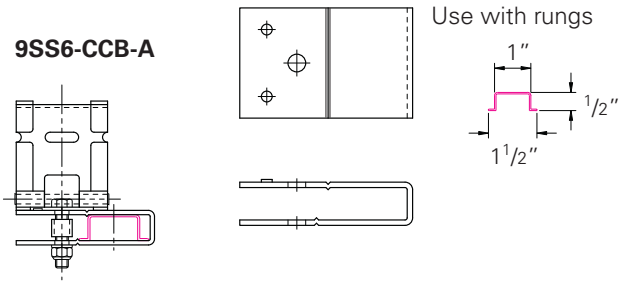

9SS6-CCB-B

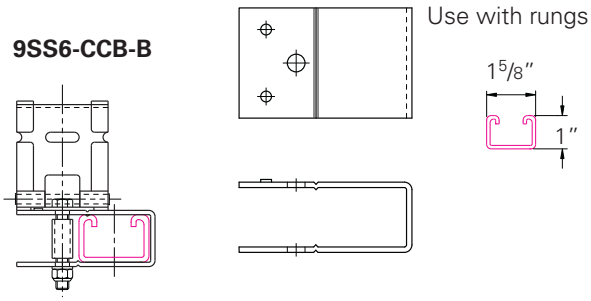

9SS6-CCB-C

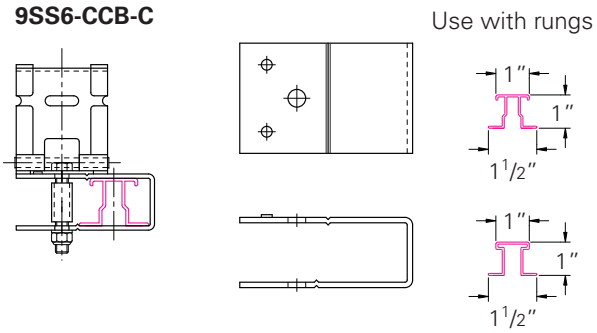

Step 5: Determine Cleat Spacing for Installation

Your cable diameter is equal to the spacing between conductor centers shown below. Find your cable diameter at the top of the table and look down at the column below it. Find the value equal to or greater than the available short circuit for your system.

Single Conductor Short Circuit Withstand Table

Max. Cable Cleat Spacing (A)		Spacing Between Conductor Centers (mm)											
		23	25	27	29	31	33	35	37	39	41	43	45
mm	In.	i_p peak (kA)											
225	9	179	187	194	203	209	216	220	229	234	240	246	250
300	12	155	163	168	174	181	187	192	198	203	209	214	215
450	18	128	133	137	144	148	152	157	161	165	170	174	178
600	24	110	115	119	124	128	132	135	139	143	148	150	153
675	27	104	108	113	117	121	124	128	132	135	139	143	147
900	36	89	93	97	102	104	108	110	115	117	121	124	127

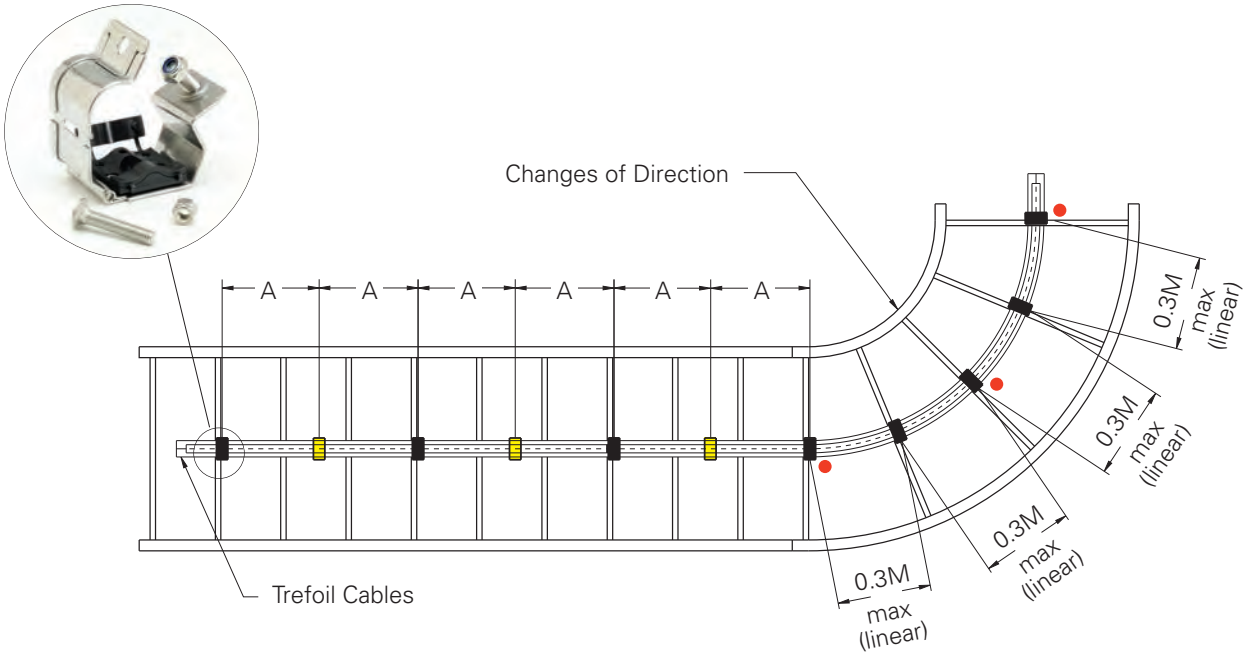

IMPORTANT: Recommended Installation Procedures

It is important that the cleats are installed properly to secure your cables:

- It is not necessary for every cleat to be attached to the ladder. Every other cleat (■) must be attached to the ladder system to mount cable in ladder. Unattached cleats (▮) provide additional restraint to keep cables bundled.
- The bend radius should be 8 to 12 times the cable diameter.
- Cleats should always be installed at the beginning, middle and end of a bend (●), and at no time should the distance between cleats on a bend be more than 0.3M center to center.

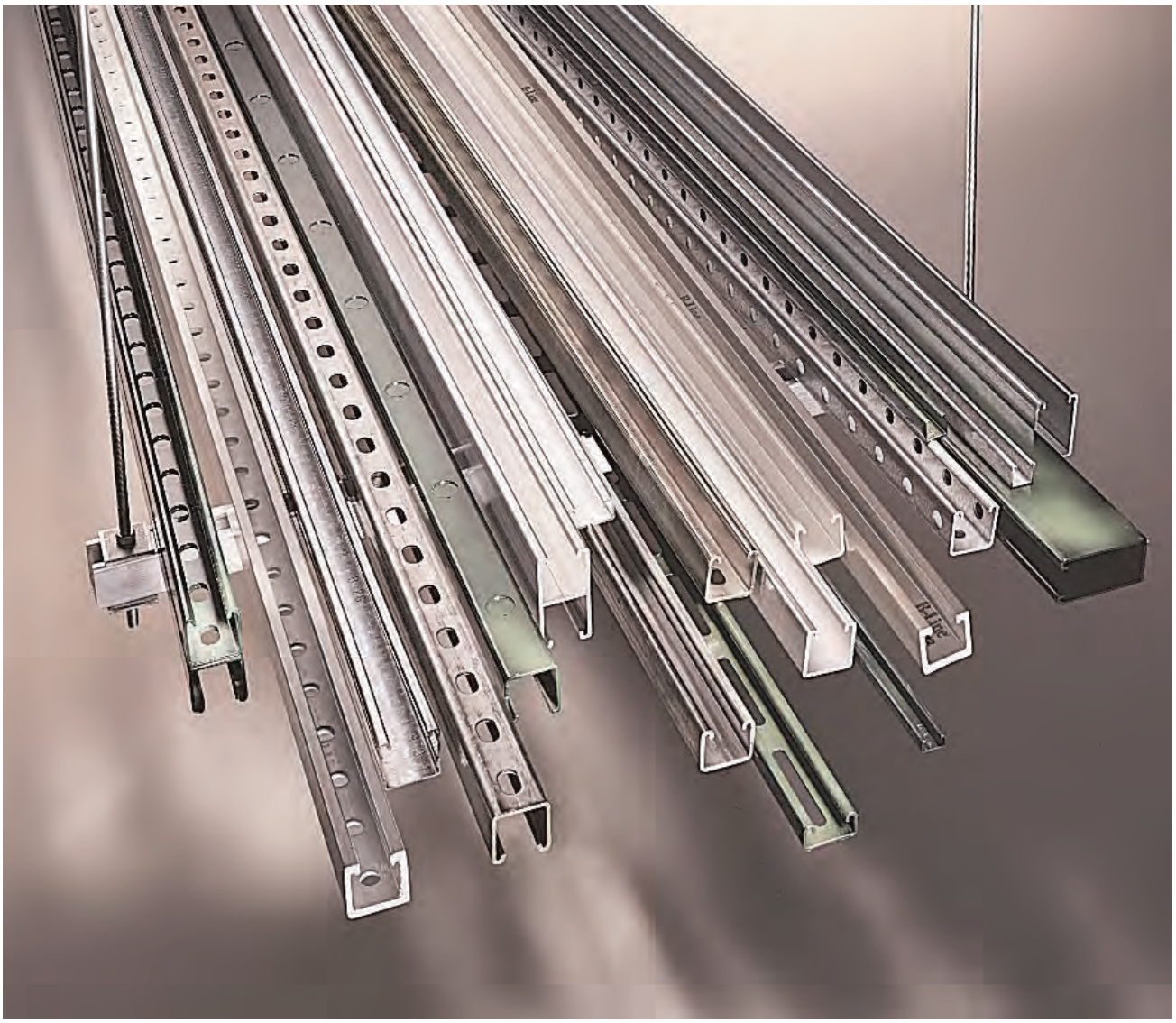

B-Line strut support systems are designed with many time-saving features. They are fully adjustable and reusable, with a complete line of channels, fittings and accessories for multi-purpose applications.

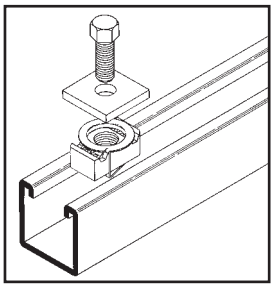

No Welding - No Drilling - Multiple Applications

- Installs quickly
- No special tools required
- Use wrench and hacksaws
- Can be taken apart and re-used
- Provides the strength of a welded system
- Helps save time by eliminating welding and drilling

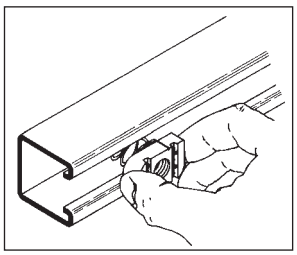

1. **Channel nut may be inserted anywhere along continuous slot. Designed for easy insertion and self-alignment.**

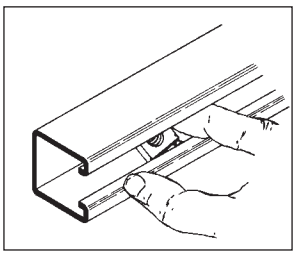

2. **A 90° turn aligns channel nut grooves with inturned lips of the channel.**

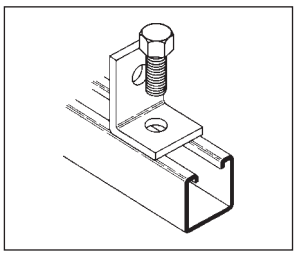

3. **Position fitting over channel nut and insert bolt to start any connection.**

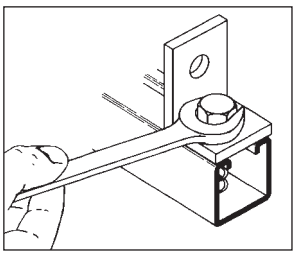

4. **With the twist of a wrench, channel nut locks its teeth firmly against inturned lips.**

B-Line strut systems provide an economical solution for electrical, mechanical and industrial supports with an unlimited variety of applications in the construction industry.

Electrical Applications
- Lighting Fixture Supports
- Raceway Systems
- Trapeze Hangers
- Pipe & Conduit Supports
- Cable Tray Supports
- Beam Adjustments

Mechanical Applications
- Piping Racks
- Tunnel Pipe Stanchions
- Concrete Inserts
- Beam Attachments
- Pipe Risers

Industrial Applications
- Racks and Shelving
- Partitions
- Production Line Supports
- Trolley Systems
- Wall Framing

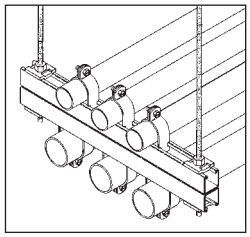

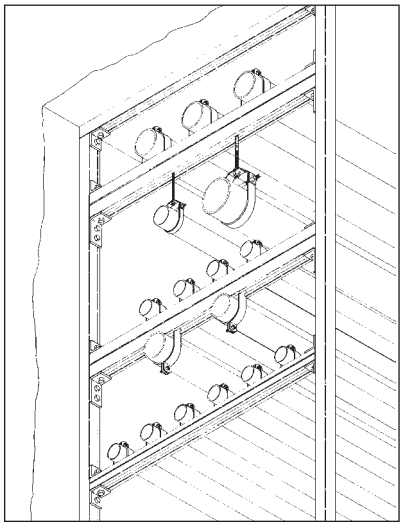

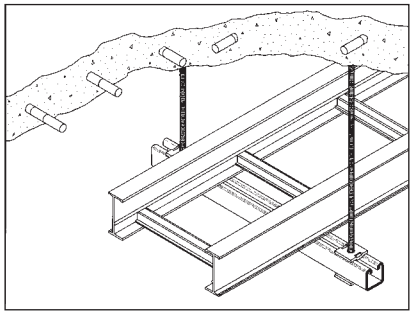

Materials

Carbon Steel
Channels made from high-quality carbon steel are continuously roll formed to precise dimensions. By cold working the steel mechanical properties are increased, allowing lightweight structures to carry the required load. Corrosion resistance of carbon steel varies widely with coating and alloy. See "Finishes" for more detailed information.

Stainless Steel
Stainless steel channel is available in AISI Type 316 material. Type 316 is non-magnetic and belongs to the austenitic stainless steels group, based on alloy content and crystallographic structure. Like carbon steel, stainless steel exhibits increased strength when cold worked by roll-forming.

Several conditions make the use of stainless steel ideal. These include reducing long term maintenance costs, high ambient temperatures, appearance, and stable structural properties such as yield strength, and high creep strength.

Type 316 resists most organic chemicals, dye stuffs and a wide variety of inorganic chemicals at elevated or cryogenic temperatures. Type 316 contains nickel and molybdenum to give it better corrosion resistance in chloride and sulfuric acid environments. More specific information concerning Type 316 is available from B-Line.

Finishes

Zinc Coatings
Zinc protects steel in two ways. First it protects the steel as a coating and second as a sacrificial anode to repair bare areas such as cut edges, scratches, and gouges. The corrosion protection of zinc is directly related to its thickness and the environment. This means a 5µm coating will last twice as long as a 2.5µm coating in the same environment.

Galvanizing also protects cut and drilled edges.

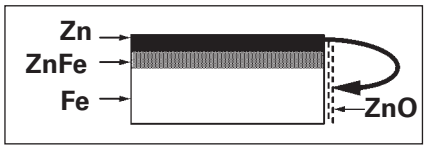

Electrogalvanized Zinc
Electrogalvanized Zinc (also known as zinc plated or electroplated) is the process by which a coating of zinc is deposited on the steel by electrolysis from a bath of zinc salts.

A rating of Fe/ZN 5 also known as SC1, B-Line hardware standard, provides a minimum zinc coating thickness of 5µm.

When exposed to air and moisture, zinc forms a tough, adherent, protective film consisting of a mixture of zinc oxides, hydroxides, and carbonates. This film is in itself a barrier coating which slows subsequent corrosive attack on the zinc. This coating is usually recommended for indoor use in relatively dry areas, as it provides ninety-six hours protection in salt spray testing per AS 2331.3.1 / ASTM B117.

Hot Dip Galvanized After Fabrication (Hot dip galvanized or batch hot dip galvanized)

Hot dip galvanized strut products are fabricated from steel and then completely immersed in a bath of molten zinc. A metallic bond occurs resulting in a zinc coating that completely coats all surfaces, including edges and welds.

Another advantage of this method is coating thickness. Strut products that are hot dip galvanized after fabrication have a minimum thickness of 460g/m^2 on each side, or a total 920g/m^2, according to AS/NZS 4680 / ASTM A123.

The zinc thickness is controlled by the amount of time each part is immersed in the molten zinc bath as well as the speed at which it is removed. The term "double dipping" refers to parts too large to fit into the galvanizing kettle; therefore, must be dipped one end at a time. It does not refer to extra coating thickness.

The layer of zinc which bonds to steel provides a dual protection against corrosion. It protects first as an overall barrier coating. If this coating happens to be scratched or gouged, zinc's secondary defense is called upon to protect the steel by galvanic action.

Hot-Dip Galvanized After Fabrication is recommended for prolonged outdoor exposure and will usually protect steel for 20 years or more in most atmospheric environments and in many industrial environments. For best results, a zinc rich paint (available from B-Line) should be applied to field cuts. The zinc rich paint will provide immediate protection for these areas and eliminate the short time period for galvanic action to "heal" the damaged coating.

Anticipated Life of Zinc Coatings In Various Atmospheric Environments

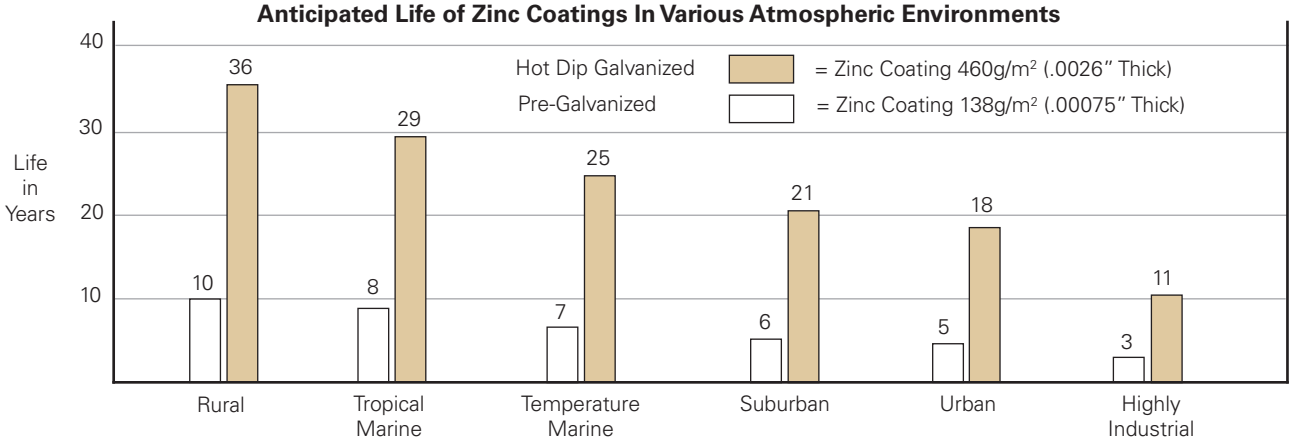

Welding

The welding procedures used in the fabrication of B-Line steel products are in accordance with recognized industry standards. To achieve the highest quality in our manufacturing processes, our welders are 3rd party certified.

MIG Welding

MIG welded, more properly called gas metal arc welded (GMAW) combination channels and fittings, are produced when physical dimensions or certain combinations require a weld process other than automatic spot welding. The same quality control requirements are imposed on MIG welded and spot welded products.

Quality Assurance

Our Quality Assurance Program has been developed and implemented for compliance with ISO 9001:2008. B-Line also complies with various industry standards and specifications.

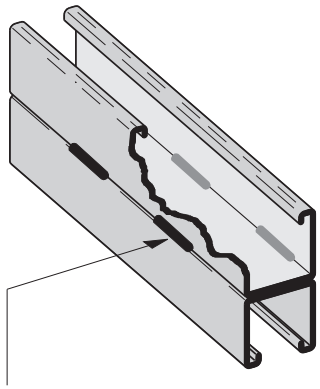

MIG Weld

CORROSION

All metal surfaces are affected by corrosion. Depending on the physical properties of the metal and the environment to which it is exposed, chemical or electromechanical corrosion may occur.

Atmospheric Corrosion

Atmospheric corrosion occurs when metal is exposed to airborne liquids, solids or gases. Some sources of atmospheric corrosion are moisture, salt, dirt and sulphuric acid. This form of corrosion is typically more severe outdoors, especially near marine environments.

Chemical Corrosion

Chemical corrosion takes place when metal comes in direct contact with a corrosive solution. Some factors which affect the severity of chemical corrosion include: chemical concentration level, duration of contact, frequency of washing, and operating temperature.

Storage Corrosion

Wet storage stain (white rust) is caused by the entrapment of moisture between surfaces of closely packed and poorly ventilated material for an extended period. Wet storage stain is usually superficial, having no affect on the properties of the metal.

Light staining normally disappears with weathering. Medium to heavy build up should be removed in order to allow the formation of normal protective film. Proper handling and storage will help to assure stain-free material. If product arrives wet, it should be unpacked and dried before storage. Dry material should be stored in a well ventilated "low moisture" environment to avoid condensation formation. Outdoor storage is undesirable, and should be avoided whenever possible.

GALVANIC SERIES IN SEA WATER

Anodic End

More Anodic

Magnesium
Magnesium Alloys
Zinc
Beryllium
Aluminum - Zinc Alloys (7000 series)
Aluminum - Magnesium Alloys (5000 series)
Aluminum (1000 series)
Aluminum - Magnesium Alloys (3000 series)
Aluminum - Magnesium - Silicon Alloys (6000 series)
Cadmium
Aluminum - Copper Alloys (2000 series)
Cast Iron, Wrought Iron, Mild Steel
Austenitic Nickel Cast Iron
Type 410 Stainless Steel (active)
Type 316 Stainless Steel (active)
Type 304 Stainless Steel (active)
Naval Brass, Yellow Brass, Red Brass
Tin
Copper
Lead-Tin Solders
Admiralty Brass, Aluminum Brass
Manganese Bronze
Silicon Bronze
Tin Bronze
Type 410 Stainless Steel (passive)
Nickel - Silver
Copper Nickel Alloys
Lead
Nickel - Aluminum Bronze
Silver Solder
Nickel 200
Silver
Type 316 Stainless Steel (passive)
Type 304 Stainless Steel (passive)
Incoloy 825
Hastelloy B
Titanium
Hastelloy C
Platinum
Graphite

Cathodic End

Metals in descending order of activity in the presence of an electrolyte.

Galvanic Corrosion

Galvanic corrosion occurs when two or more dissimilar metals are in contact in the presence of an electrolyte (ie. moisture). An electrolytic cell is created and the metals form an anode or a cathode depending on their relative position on the Galvanic Series Table. The anodic material will be the one to corrode. Anodic or cathodic characteristics of two dissimilar metals will depend on the type of each material. For example: If zinc and steel are in contact, the zinc acts as the anode and will corrode; the steel acts as the cathode, and will be protected. If steel and copper are in contact, the steel is now the anode and will corrode.
The rate at which galvanic corrosion occurs depends on several factors:

1. The relative position on the Galvanic Series Table - the further apart materials are in the Galvanic Series Table, the greater the potential for corrosion of the anodic material.

2. The amount and concentration of electrolyte present - an indoor, dry environment will have little or no galvanic corrosion compared to a wet atmosphere.

3. The relative size of the materials - a small amount of anodic material in contact with a large cathodic material will result in greater corrosion. Likewise, a large anode in contact with a small cathode will decrease the rate of attack.

Design of Strut Systems

Beams
Beams are usually defined as horizontal members which are subjected to vertical loads such as shelves, platforms or supports for pipes, conduits or cable ladders. The following is a brief overview of common beam configurations.

Simple Beam
An example of a simple beam is a length of channel placed across two cylinders. When a load is applied, the channel will support the load because of its stiffness. The cylinders serve to support the channel, but do not interfere with its natural tendency to flex or bend. Simple beam analysis is used almost universally for beam comparisons, even though it is seldom practical in field installations.

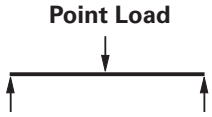

A cable ladder or conduit trapeze hanger closely resembles a simple beam.

Fixed Beam
This type of fixed support restricts the movement of the ends of the channel when a load is applied. Because of this, the stiffness of the channel at the ends and center is employed to resist the load. The result is a load capability which is greater than that of an identical simple beam.

The fixed beam can be approximated by bolting or welding a length of channel to rigid supports.

Cantilever Beam
Cantilever beams are often viewed as variations of a fixed beam, but they have special characteristics of their own. One end of the channel is firmly attached to a rigid support while the other end remains completely free.

A shelf bracket is an example of a cantilever beam.

Continuous Beam
This beam configuration is commonly used in lighting installations. The continuous beam possesses traits of both the simple and fixed beams. When equal loads are applied to all spans simultaneously, the counter-balancing effect of the loads on both sides of a support restricts the movement of the channel at the support, similar to that of the fixed beam. The end spans behave substantially like simple beams.

Continuous beam installations can typically support 20% more load than a simple beam of the same span with approximately half the deflection.

Therefore, simple beam data should be used for a general comparison only. An example of this configuration is found in a long run of channel when installed across several supports to form a number of spans.

Deflection
Deflection, commonly referred to as "sag", is inherent in applying a load to a beam and cannot be avoided. Any and all beams will deflect when loaded. The amount of deflection will vary depending upon the material and the stiffness or moment of inertia. The deflection equations in this section show that increasing the stiffness can be increased by a variety of methods. Increasing the depth of the channel is the most direct method.

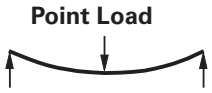

The material used affects deflection in a manner which is significantly different from the way in which it affects load capacity. The deflection under load is inversely proportional to a material property known as the "modulus of elasticity" designated by "E".

The modulus of elasticity is dependent upon the basic composition of the material and is not necessarily related to the material's strength.

Safety Factor
The design loads given for strut beam loads are based on a simple beam condition using allowable stress of 172 MPa. This allowable stress results in a safety factor of 1.68. This is based upon a virgin steel minimum yield strength of 227 MPa cold worked during rolling to an average yield stress of 289 MPa.

Aluminum typically has an elastic modulus which is $^{1}/_{3}$ that of steel even though they may have identical strength. As a result, the deflection of aluminum channel will be three times that of steel channel under equal loading. In areas where structures will be subject to general viewing, deflection can produce a displeasing effect. To the untrained eye, a sagging channel may appear to be a result of poor design or excessive loading. This is not usually the case. Many properly designed channel installations will show a noticeable deflection at their designed loads. In areas where cosmetics are not important, deflection should not be a factor. Designing an entire installation based on minimal deflection could result in an over designed structure. This translates into increased material and installation cost. Where cosmetics are important, it may be necessary to limit the deflection to an aesthetically pleasing amount. This "acceptable deflection" amount is typically given as a fraction of the span. **1/240 span** deflection is typically the limit where the amount of deflection appears negligible. For example, a beam span of 6000mm would be allowed 25mm (6000/240) of deflection at the mid point. A 3000mm span would only be allowed 12.5mm (3000/240) of deflection. The maximum load for the channel must be limited in order to remain under these deflection requirements. The allowable load resulting in 1/240 span deflection is posted in the beam load chart for each channel size.

For even more stringent deflection requirements, an allowable load is listed in the beam load charts which results in **1/360** span deflection. This amount of deflection is sometimes used for beams in finished ceilings that are to be plastered.

Twisting & Lateral Bracing

Loading of strut on long spans can cause torsional stress, resulting in the tendency of the strut to twist or bend laterally. This phenomenon reduces the allowable beam loads as shown in the beam loading charts. It is recommended that long spans be supported in a manner to prevent twisting (fixed ends), and that the channel have adequate lateral bracing. Many typical strut applications provide this support and bracing inherently. Piping, tubing, cable ladders, or conduits mounted to the strut with straps and clamps prevent twisting or lateral movement. If no such lateral support exists, contact the factory for loading recommendations.

Columns

Columns are vertical members which carry loads in compression. One common example of a channel column is the vertical members of a storage rack.
In theory, a column will carry a load equal to its cross sectional area multiplied by the ultimate compressive stress of the material of which the column is made. In reality, there are many factors affecting the load capacity of a column, such as the tendency to buckle or twist laterally (torsional-flexural buckling), the type of connection at the top or bottom, the eccentricity of the load application, and material imperfections. Several of these failure modes have been considered in the allowable column load tables shown in the "Channel" section of this catalog.

B-Line strongly recommends that the engineer perform a detailed study of the many variable conditions before the selection process begins.

Design Factors to be Considered

The loading capacity of channel depends primarily on the material, its cross-sectional design, and the beam or column loading configuration. It should be noted that if two lengths of channel have identical designs and configurations, the one made of the stronger base material will support a larger load. Therefore, any comparison of channel should begin by determining whether the materials are approximately equal in strength.

The column loading chart for each channel lists the allowable load for each channel in compression. This load varies depending on the support condition or "K-factor".
Several "K-factors" are listed, which correspond to the following support conditions:

K = .8 pinned top - fixed bottom
K = .65 fixed top - fixed bottom
K = 1.0 pinned top - pinned bottom
K = 1.2 free top - fixed bottom

There are a number of physical properties which are important to the complete design of a channel member; the "section modulus" designated as "Sx" or "Sy", "moment of inertia" designated by "Ix" or "Iy", and the "radius of gyration" which is given as "rx" or "ry".

Every structural material has its own maximum or ultimate stress, which is usually expressed in pascals. Any load which causes a member to fail is referred to as its "ultimate" load. In order to prevent channel from being accidentally loaded up to or beyond its ultimate load, a safety factor is included into the design. The ultimate load is divided by the safety factor to obtain the "recommended" or "allowable" working load.

When evaluating channel under various beam conditions, it is often more convenient to compare in terms of the ultimate or recommended "bending moment". Simple equations show the stress is directly proportional to the bending moment.

Therefore, comparing bending moments can save time in repeated calculations. The chart containing Formulas on Common Beam Loadings (following page) shows how to calculate the bending moment for various configurations and load conditions. It should be noted that the bending moment is usually not constant, but varies along the length of the span. However, the channel must be designed for a single point, which is the point of maximum bending moment.

For information regarding dynamic or seismic design, contact Eaton's B-Line's Business.

General Information

Torque

The torque values given throughout the catalog are to be used as a guide only. The relationship between the applied torque or torque wrench reading and the actual tension created in the bolt may be substantially different. For example, a dry non-lubricated bolt with a heavy plating may rate 50% as efficient as a bolt which is lubricated with a mixture of heavy oil and graphite. Other important factors affecting torque-tension relationships include friction under the bolt head or nut, hole tolerances, and torque wrench tolerances. Accuracy of many commercial torque wrenches may vary as much as plus or minus 25%.

Charts and Tables

Charts and tables in this section are compiled from information published by nationally recognized organizations and are intended for use as a guide only. B-Line recommends that users of this information determine the validity of such information as applied to their own application.

Recommended Strut System Specification

Brackets [ ] indicate alternative specifications which may be substituted by the project engineer.

PART 1 - GENERAL

1.01 WORK INCLUDED

A. Continuous slot, bolted metal framing channels and all associated fittings and hardware.

B. Trapeze type supports for cable ladder, conduit, pipe and other similar systems.

C. Use of bolted metal framing as a surface metal raceway.

1.02 REFERENCES

A. AS/NZS 4680 / ASTM A123 - Specification for Zinc (hot-dip galvanized) Coatings on Products Fabricated from Rolled, Pressed, and Forged Steel Shapes, Plates, Bars and Strips.

B. AS/NZS 1594 / ASTM A1011 - Specification for Steel, Sheet and Strip, Carbon, Hot-Rolled, Structural Quality.

C. AS 1789 / ASTM B633 - Specification for Electrodeposited Coatings of Zinc on Iron and Steel.

D. AS/NZS 1594 / ASTM A1018 - Standard Specification for Steel, Sheet and Strip, Heavy-Thickness Coils, Carbon, Hot-Rolled, Structural Quality.

E. MFMA - Metal Framing Standards Publication, MFMA-4.

1.03 QUALITY ASSURANCE

A. Manufacturers : Firms regularly engaged in the manufacture of bolted metal framing of the types required, whose products have been in satisfactory use in similar service for not less than 5 years.

B. For stainless steel items, the part number shall contain a material designator (EXAMPLE: B-Line B22SS6 for type 316 or B22SS4 for type 304), or a separate stamp shall be included to reference the type of material used.

C. MFMA Compliance: comply with the latest revision of MFMA Standard Publication Number MFMA-4, "Metal Framing".

D. NEC Compliance: Comply with the latest revision NFPA 70 - Article 352 "Surface Metal Raceways and Surface Nonmetallic Raceways".

1.04 SUBMITTALS

A. Submit drawings of strut and accessories including clamps, brackets, hanger rods and fittings.

B. Submit manufacturer's product data on strut channels including, but not limited to, types, materials, finishes, gauge thickness and hole patterns. For each different strut cross section, submit cross sectional properties including Section Modulus (S_x) and Moment of Inertia (I_x).

1.05 DELIVERY, STORAGE AND HANDLING

A. Deliver strut systems and components carefully to avoid breakage, denting, and scoring finishes. Do not install damaged equipment.

B. Store strut systems and components in original cartons and in clean dry space; protect from weather and construction traffic.

PART 2 - PRODUCTS

2.01 ACCEPTABLE MANUFACTURERS

A. Manufacturer: Subject to compliance with these specifications, strut systems to be installed shall be as manufactured by Eaton's B-Line Business [or engineer approved equal.]

2.02 STRUT CHANNELS AND COMPONENTS

A. General: Strut shall be 41mm wide in varying heights and welded combinations as required to meet load capacities and designs indicated on the drawings.

B. Material and Finish: Material and finish specifications for each strut type are as follows:

1. Hot-Dip Galvanized Steel: Strut shall be made from structural quality steel meeting the minimum mechanical properties of AS/NZS 1594 / ASTM A1011 and shall be hot-dip galvanized after fabrication in accordance with AS/NZS 4680 / ASTM A123. Fittings shall be manufactured from steel meeting the minimum requirements of AS/NZS 1594 / ASTM A1018, and hot-dip galvanized after fabrication in accordance with AS/NZS 4680 / ASTM A123. All hardware shall be stainless steel Type 316 or hot-dip galvanized AS 1214 / ASTM A153.

2. Stainless Steel: All strut, fittings and hardware shall be made of stainless steel Type 316 as indicated. Channels must be identified as required in previous section 1.03 Quality Assurance.

PART 3 - EXECUTION

3.01 INSTALLATION

A. Install strut as indicated; in accordance with equipment manufacturer's recommendations, and with recognized industry practices.

B. All nuts and bolts shall be tightened to the following values.

Bolt Size	Torque (Nm)
M6	12
M8	17
M10	36
M12	62

Design Load Data (For typical channel-fitting connections when used in pairs).

Channel Thickness	90° Fittings					
	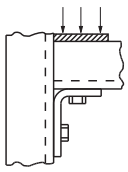	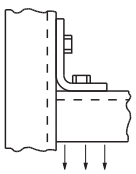	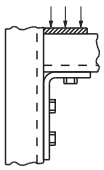	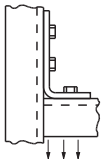	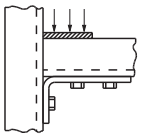	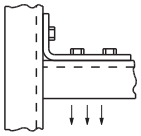
2.6mm	6.67kN	4.45kN	8.90kN	6.67kN	6.67kN	4.45kN

Channel Thickness	90° Fittings				Flat Fittings	
	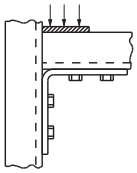	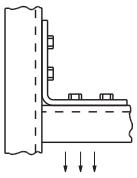	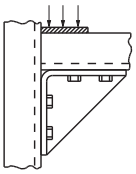	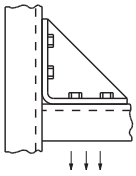	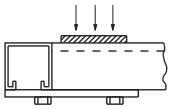	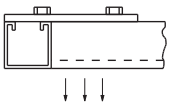
2.6mm	11.12kN	8.90kN	13.34kN	11.12kN	4.45kN	4.45kN

Design load data includes a safety factor of 2.5 (safety factor = ratio of ultimate load to design load).

Channel
B-Line channel is cold formed on our modern rolling mills from 2.6mm low carbon steel strips. A continuous slot with inturned lips provides the ability to make attachments at any point.

Lengths & Tolerances
All channels excluding 'SH' style
± 3.2mm on 3m and
± 4.76mm on 6m
All 'SH' channels only
± 6.35mm on 3m and
± 12.70mm on 6m
Custom lengths are available upon request.

Slots
B-Line slotted series of channels offer full flexibility. A pre-punched slot pattern eliminates the need for precise field measuring for hole locations.

Materials & Finishes (Unless otherwise noted)
Steel: Plain & Pre-galvanized
2.6mm thick

Finish Code	Finish	Specification
PLN	Plain	AS/NZS 1594 / ASTM A1011
HDG	Hot-Dipped Galvanized	AS/NZS 4680 / ASTM A123
SS6	Stainless Steel	Type 316

Note: A minimum order may apply on special material and finishes.

Design Load (Steel & Stainless Steel)
The design loads given for strut beam loads are based on a simple beam condition using an allowable stress of 172 MPa. This allowable stress results in a safety factor of 1.68. This is based upon virgin steel minimum yield strength of 227 MPa cold worked during rolling to an average yield stress of 289 MPa.
For aluminum channel loading multiple steel loading by a factor of 0.38.

Welding
Weld spacing is maintained at 76mm on center. Through high quality control testing of welded channels and continuous monitoring of welding equipment, We provide one of the most consistent combination channels available today.

Metric
Unless noted, all metric dimensions are in millimeters.

Channel Part Numbering

B22 SH - 3000MM HDG

Channel Type	Hole Pattern	Length	Material/Finish
B22	Blank = Solid	3000mm = 3M	HDG = Hot Dip Galvanized
B52	SH = Slotted Holes	6000mm = 6M	SS6 = Type 316 Stainless Steel

All dimensions are in millimeters unless otherwise specified.

B11

- Thickness: 2.6mm
- Standard lengths: 3m & 6m
- Standard finishes: Hot-Dipped Galvanized, Stainless Steel Type 316
- Weight: 4.54kg/m

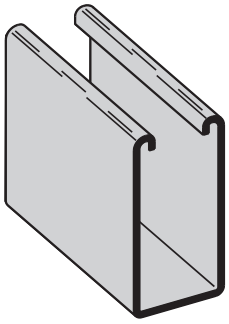

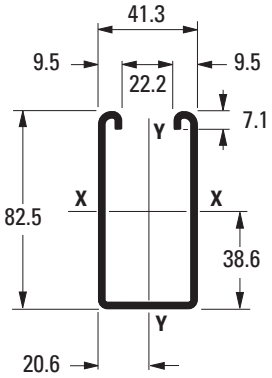

B12

- Thickness: 2.6mm
- Standard lengths: 3m & 6m
- Standard finishes: Hot-Dipped Galvanized, Stainless Steel Type 316
- Weight: 3.67kg/m

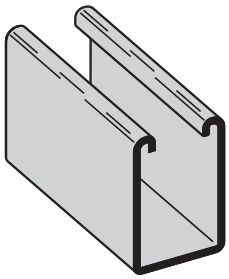

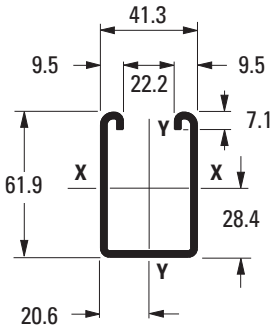

B11SH

SH Type Channel

- For beam loads use 90% of Channel Loading Chart
- Weight: 4.42kg/m

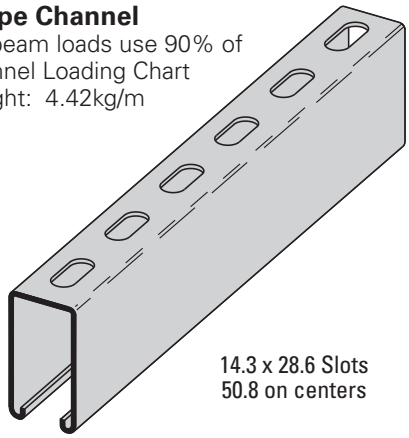

B12SH

SH Type Channel

- For beam loads use 90% of Channel Loading Chart
- Weight: 3.55kg/m

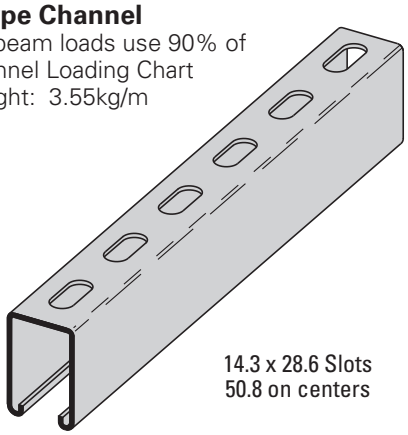

Section Properties			X - X Axis			Y - Y Axis		
Channel	Weight kg/m	Areas of Section cm^2	Moment of Inertia (I) cm^4	Section Modulus (S) cm^3	Radius of Gyration (r) cm	Moment of Inertia (I) cm^4	Section Modulus (S) cm^3	Radius of Gyration (r) cm
B11	4.55	5.81	46.63	10.61	2.83	18.14	8.79	1.77
B12	3.70	4.71	22.26	6.65	2.17	28.12	13.63	1.73

Calculations of section properties are based on metal thicknesses as determined by the AISI Cold-Formed Steel Design Manual.

All dimensions are in millimeters unless otherwise specified.

Beam & Column Loading for B11 Channel

		Beam Loading			Column Loading				
			Uniform Load @ Deflection =		Max. Loading K = .80		Max. Loading (Loaded @ C.G.)		
Beam Span mm	Uniform Load N	Deflection mm	1/240 Span N	1/360 Span N	Loaded @ C.G. N	Loaded @ Slot Face N	K = .65 N	K = 1.0 N	K = 1.2 N
609	22819	0.73	22819	22819	36431	19914	37569	34620	32521
914	15515	1.65	15515	15515	32521	18607	34865	28927	24963
1219	11636	2.97	11636	11636	27641	16827	31373	22188	16974
1524	9310	4.65	9310	8487	22188	14586	27312	15991	12410
1829	7757	6.68	7757	5894	16974	10871	22890	12410	9844
2133	6650	9.09	6494	4332	13625	8438	18384	10191	8211
2438	5818	11.89	4973	3314	11405	6814	15115	8687	7077
2743	5173	15.03	3932	2620	9844	5662	12837	7597	6232
3048	4653	18.57	3185	2122	8687	4808	11183	6770	5565**
3657	3879	26.74	2211	1472	7077	3630	8945	5565**	4564**
4267	3323	36.40	1623	1081	5992	2856	7504	4706**	3821**
4877	2909	47.52	1245	827	5191**	2308	6490	4048**	--
5486	2584	60.15	983	654	4564**	1908	5716**	--	--
6096	2326	74.27	796	529	4048**	1601	5106**	--	--

Based on simple beam condition using an allowable design stress of 172 MPa in accordance with MFMA, with adequate lateral bracing. Actual yield point of cold rolled steel is 289 MPa. To determine concentrated load capacity at mid span, multiply uniform load by 0.5 and corresponding deflection by 0.8. *Failure determined by weld shear.

**Where the slenderness ratio $\frac{KL}{r}$ exceeds 200, and K = end fixity factor, L = actual length and r = radius of gyration.

Beam & Column Loading for B12 Channel

		Beam Loading			Column Loading				
			Uniform Load @ Deflection =		Max. Loading K = .80		Max. Loading (Loaded @ C.G.)		
Beam Span mm	Uniform Load N	Deflection mm	1/240 Span N	1/360 Span N	Loaded @ C.G. N	Loaded @ Slot Face N	K = .65 N	K = 1.0 N	K = 1.2 N
305	17259	0.23	17259	17259	45105	21138	45581	44326	43397
609	14559	0.96	14559	14559	41119	20079	42876	38384	35288
914	9706	2.18	9706	9706	35288	18402	35748	30185	24785
1219	7277	3.88	7277	6321	28406	16182	33637	21285	16534
1524	5823	6.09	5823	4043	21285	13180	27957	15671	12482
1829	4853	8.76	4212	2811	16534	9773	22081	12482	10102
2133	4159	11.94	3096	2064	13576	7637	17766	10431	8509
2438	3638	15.59	2371	1579	11565	6187	14901	8981	7339
2743	3234	19.73	1873	1250	10102	5137	12869	7886	6432
3048	2913	24.36	1517	1010	8981	4346	11356	7015	5689**

Based on simple beam condition using an allowable design stress of 172 MPa in accordance with MFMA, with adequate lateral bracing. Actual yield point of cold rolled steel is 289 MPa. To determine concentrated load capacity at mid span, multiply uniform load by 0.5 and corresponding deflection by 0.8. *Failure determined by weld shear.

**Where the slenderness ratio $\frac{KL}{r}$ exceeds 200, and K = end fixity factor, L = actual length and r = radius of gyration.

All dimensions are in millimeters unless otherwise specified.

B22

- Thickness: 2.6mm
- Standard lengths: 3m & 6m
- Standard finishes: Hot-Dipped Galvanized, Stainless Steel Type 316
- Weight: 2.83kg/m

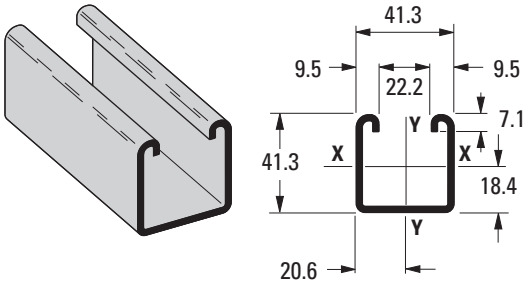

B24

- Thickness: 1.9mm
- Standard lengths: 3m & 6m
- Standard finishes: Hot-Dipped Galvanized, Stainless Steel Type 316
- Weight: 2.08kg/m

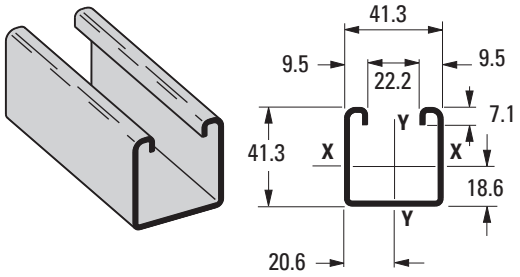

B22SH

SH Type Channel

- For beam loads use 90% of Channel Loading Chart
- Weight: 2.71kg/m

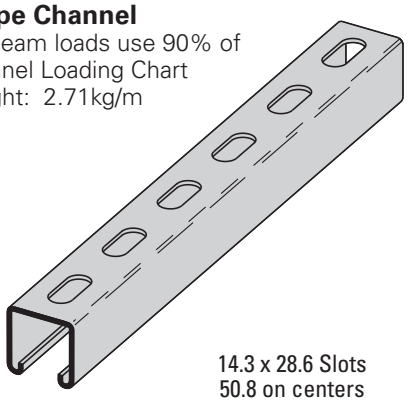

B24SH

SH Type Channel

- For beam loads use 90% of Channel Loading Chart
- Weight: 1.99kg/m

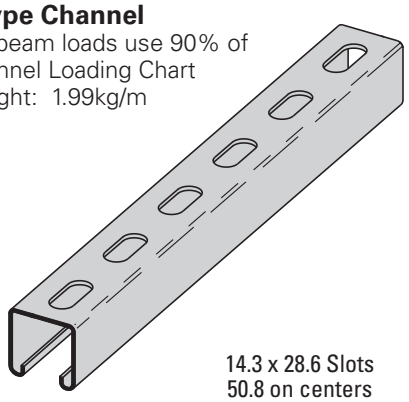

Section Properties			X - X Axis			Y - Y Axis		
Channel	Weight kg/m	Areas of Section cm^2	Moment of Inertia (I) cm^4	Section Modulus (S) cm^3	Radius of Gyration (r) cm	Moment of Inertia (I) cm^4	Section Modulus (S) cm^3	Radius of Gyration (r) cm
B22	2.84	3.62	7.96	3.48	1.48	9.99	4.84	1.66
B24	2.15	2.74	6.22	2.74	1.51	7.73	3.75	1.68

Calculations of section properties are based on metal thicknesses as determined by the AISI Cold-Formed Steel Design Manual.

All dimensions are in millimeters unless otherwise specified.

Beam & Column Loading for B22 Channel

		Beam Loading			Column Loading				
			Uniform Load @ Deflection =		Max. Loading K = .80		Max. Loading (Loaded @ C.G.)		
Beam Span mm	Uniform Load N	Deflection mm	1/240 Span N	1/360 Span N	Loaded @ C.G. N	Loaded @ Slot Face N	K = .65 N	K = 1.0 N	K = 1.2 N
305	11610	0.35	11610	11610	46502	19120	47142	45470	44260
609	7571	1.42	7571	7571	41417	17762	43597	38174	34700
914	5049	3.20	5049	3999	34700	15964	38593	28336	23985
1219	3785	5.69	3372	2246	27548	13869	32921	20987	16863
1524	3029	8.91	2157	1437	20987	11703	27103	16085	13060
1829	2522	12.83	1499	1001	16863	10071	21658	13060	10591
2133	2162	17.45	1103	734	14127	8825	17957	10947	8807
2438	1890	22.81	845	560	16583	7833	15373	9346	7433
2743	1681	28.85	667	445	10591	7006	13442	8078	6343**
3048	1512	35.63	538	360	9346	6307	11921	7041**	5462**

Based on simple beam condition using an allowable design stress of 172 MPa in accordance with MFMA, with adequate lateral bracing. Actual yield point of cold rolled steel is 289 MPa. To determine concentrated load capacity at mid span, multiply uniform load by 0.5 and corresponding deflection by 0.8. *Failure determined by weld shear.

**Where the slenderness ratio $\frac{KL}{r}$ exceeds 200, and K = end fixity factor, L = actual length and r = radius of gyration.

Beam & Column Loading for B24 Channel

		Beam Loading			Column Loading				
			Uniform Load @ Deflection =		Max. Loading K = .80		Max. Loading (Loaded @ C.G.)		
Beam Span mm	Uniform Load N	Deflection mm	1/240 Span N	1/360 Span N	Loaded @ C.G. N	Loaded @ Slot Face N	K = .65 N	K = 1.0 N	K = 1.2 N
305	5427	0.35	5427	5427	17802	9857	3952	17579	17308
609	5173	1.45	5173	5173	16636	9381	17157	15809	14838
914	3447	3.25	3447	2682	14839	8634	15920	13175	11325
1219	2584	5.79	2264	1508	12579	7813	14310	10013	7584
1524	2068	9.07	1450	965	10013	6534	12424	7130	5484
1829	1726	13.05	1450	965	7584	5351	10346	5484	4301
2133	1477	17.75	738	494	6040	4497	8233	4461	3545
2438	1294	23.19	565	378	5022	3874	6730	3767	3025
2743	1147	29.36	449	298	4301	3407	5680	3265	2633**
3048	1036	36.24	360	240	3767	3042	4915	2882	2326**

Based on simple beam condition using an allowable design stress of 172 MPa in accordance with MFMA, with adequate lateral bracing. Actual yield point of cold rolled steel is 289 MPa. To determine concentrated load capacity at mid span, multiply uniform load by 0.5 and corresponding deflection by 0.8. *Failure determined by weld shear.

**Where the slenderness ratio $\frac{KL}{r}$ exceeds 200, and K = end fixity factor, L = actual length and r = radius of gyration.

B32

- Thickness: 2.6mm
- Standard lengths: 3m & 6m
- Standard finishes: Hot-Dipped Galvanized, Stainless Steel Type 316
- Weight: 2.53kg/m

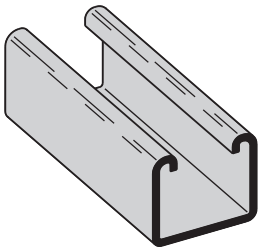

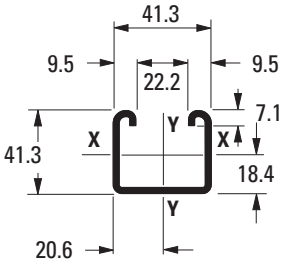

B32SH

SH Type Channel

- For beam loads use 90% of Channel Loading Chart
- Weight: 2.41kg/m

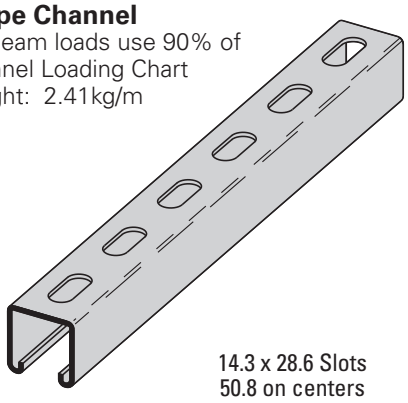

Section Properties			X - X Axis			Y - Y Axis		
Channel	Weight kg/m	Areas of Section cm^2	Moment of Inertia (I) cm^4	Section Modulus (S) cm^3	Radius of Gyration (r) cm	Moment of Inertia (I) cm^4	Section Modulus (S) cm^3	Radius of Gyration (r) cm
B32	2.58	3.29	5.21	2.67	1.26	8.73	4.23	1.63

Calculations of section properties are based on metal thicknesses as determined by the AISI Cold-Formed Steel Design Manual.

Beam & Column Loading for B32 Channel

		Beam Loading			Column Loading				
			Uniform Load @ Deflection =		Max. Loading K = .80		Max. Loading (Loaded @ C.G.)		
Beam Span mm	Uniform Load N	Deflection mm	1/240 Span N	1/360 Span N	Loaded @ C.G. N	Loaded @ Slot Face N	K = .65 N	K = 1.0 N	K = 1.2 N
305	9830	0.40	9830	9830	45719	17953	46404	44638	43383
609	5778	1.65	5778	5778	40496	16601	42702	37307	33984
914	3852	3.73	3852	2611	33984	14781	37716	29002	24131
1219	2887	6.65	2202	1468	27361	12797	32316	21253	17214
1524	2313	10.41	1410	938	21253	10831	26956	16427	13318
1829	1926	14.98	978	654	17214	9292	21898	13318	10689
2133	1650	20.39	720	480	14425	8082	18300	11071	8038**
2438	1445	26.64	551	369	12339	7090	15706	8865	6156**
2743	1285	33.70	436	289	10689	6258	13714	7001**	4862**
3048	1156	41.63	351	236	8865	5431	12112	5671**	3941**

Based on simple beam condition using an allowable design stress of 172 MPa in accordance with MFMA, with adequate lateral bracing. Actual yield point of cold rolled steel is 289 MPa. To determine concentrated load capacity at mid span, multiply uniform load by 0.5 and corresponding deflection by 0.8. *Failure determined by weld shear.

**Where the slenderness ratio $\frac{KL}{r}$ exceeds 200, and K = end fixity factor, L = actual length and r = radius of gyration.

All dimensions are in millimeters unless otherwise specified.

B42

- Thickness: 2.6mm
- Standard lengths: 3m & 6m
- Standard finishes: Hot-Dipped Galvanized, Stainless Steel Type 316
- Weight: 2.14kg/m

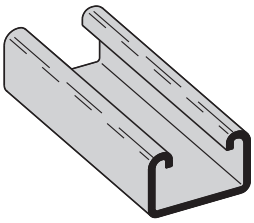

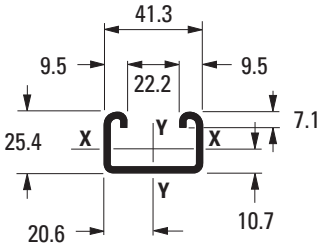

B42SH

SH Type Channel

- For beam loads use 90% of Channel Loading Chart
- Weight: 2.02kg/m

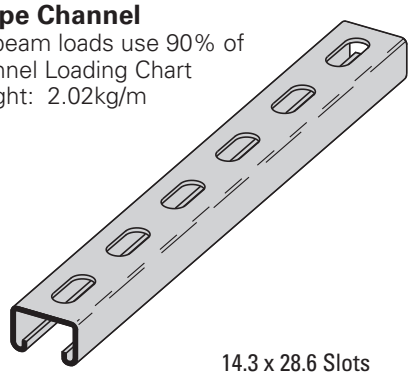

Section Properties			X - X Axis			Y - Y Axis		
Channel	Weight kg/m	Areas of Section cm^2	Moment of Inertia (I) cm^4	Section Modulus (S) cm^3	Radius of Gyration (r) cm	Moment of Inertia (I) cm^4	Section Modulus (S) cm^3	Radius of Gyration (r) cm
B42	2.18	2.79	2.31	1.59	0.91	6.85	3.32	1.57

Calculations of section properties are based on metal thicknesses as determined by the AISI Cold-Formed Steel Design Manual.

Beam & Column Loading for B42 Channel

		Beam Loading			Column Loading				
			Uniform Load @ Deflection =		Max. Loading K = .80		Max. Loading (Loaded @ C.G.)		
Beam Span mm	Uniform Load N	Deflection mm	1/240 Span N	1/360 Span N	Loaded @ C.G. N	Loaded @ Slot Face N	K = .65 N	K = 1.0 N	K = 1.2 N
305	6841	0.56	6841	6841	40648	15537	41293	39660	38566
609	3420	2.23	3420	2589	36195	13989	37988	33757	31360
914	2282	5.03	1726	1152	31360	12108	34060	26356	19283
1219	1708	8.94	970	645	24042	9906	30185	15622	10849
1524	1370	13.97	623	413	15622	7642	23451	9995	6943**
1829	1139	20.11	431	289	10849	6009	16432	6943**	4822**
2133	978	27.40	316	213	7971	4835	12072	5102**	3541**
2438	854	35.79	244	160	6103	3963	9243	3905**	--
2743	760	45.29	191	129	4822**	3305	7304	--	--
3048	685	55.93	155	102	3905**	2793	5916**	--	--

Based on simple beam condition using an allowable design stress of 172 MPa in accordance with MFMA, with adequate lateral bracing. Actual yield point of cold rolled steel is 289 MPa. To determine concentrated load capacity at mid span, multiply uniform load by 0.5 and corresponding deflection by 0.8. *Failure determined by weld shear.

**Where the slenderness ratio $\frac{KL}{r}$ exceeds 200, and K = end fixity factor, L = actual length and r = radius of gyration.

All dimensions are in millimeters unless otherwise specified.

B52

- Thickness: 2.6mm
- Standard lengths: 3m & 6m
- Standard finishes: Hot-Dipped Galvanized, Stainless Steel Type 316
- Weight: 1.89kg/m

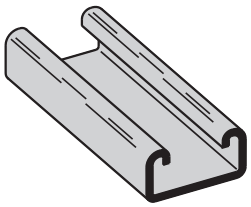

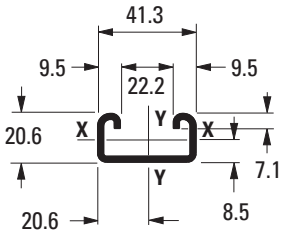

B54

- Thickness: 1.9mm
- Standard lengths: 3m & 6m
- Standard finishes: Hot-Dipped Galvanized, Stainless Steel Type 316
- Weight: 1.44kg/m

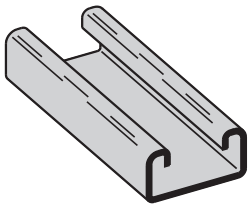

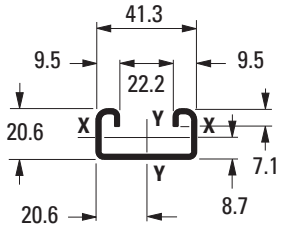

B52SH

SH Type Channel

- For beam loads use 90% of Channel Loading Chart
- Weight: 1.77kg/m

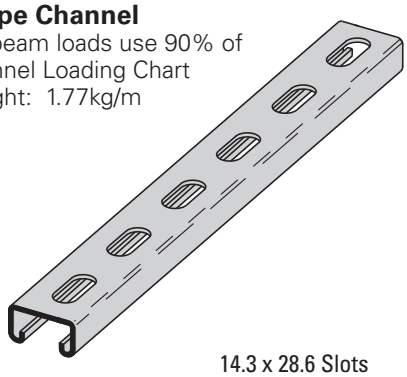

14.3 x 28.6 Slots
50.8 on centers

B54SH

SH Type Channel

- For beam loads use 90% of Channel Loading Chart
- Weight: 1.35kg/m

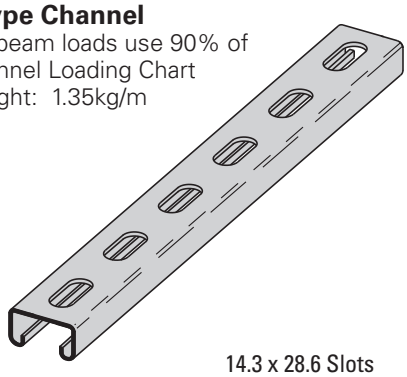

14.3 x 28.6 Slots
50.8 on centers

Section Properties			X - X Axis			Y - Y Axis		
Channel	Weight kg/m	Areas of Section cm^2	Moment of Inertia (I) cm^4	Section Modulus (S) cm^3	Radius of Gyration (r) cm	Moment of Inertia (I) cm^4	Section Modulus (S) cm^3	Radius of Gyration (r) cm
B52	1.95	2.49	1.33	1.10	0.73	5.84	2.83	1.53
B54	1.51	1.93	1.09	0.92	0.75	4.60	4.46	1.55

Calculations of section properties are based on metal thicknesses as determined by the AISI Cold-Formed Steel Design Manual.

All dimensions are in millimeters unless otherwise specified.

Beam & Column Loading for B52 Channel

		Beam Loading			Column Loading				
			Uniform Load @ Deflection =		Max. Loading K = .80		Max. Loading (Loaded @ C.G.)		
Beam Span mm	Uniform Load N	Deflection mm	1/240 Span N	1/360 Span N	Loaded @ C.G. N	Loaded @ Slot Face N	K = .65 N	K = 1.0 N	K = 1.2 N
305	4799	0.66	4799	4799	37396	14065	38001	36497	35537
609	2397	2.69	2251	1499	33446	12255	35047	29007	24007
914	1601	6.09	1001	667	24007	9572	29594	16085	11169
1219	1201	10.84	560	373	14136	6939	21285	9047	6281
1524	961	16.94	360	240	9047	5155	13705	5791	4021
1829	800	24.38	249	164	6281	3963	9515	4021**	--
2133	685	33.20	182	124	4617**	3131	6992	2953**	--
2438	600	43.36	142	93	3532**	2535	5351**	--	--
2743	534	54.86	111	75	--	2090	4230**	--	--
3048	480	67.74	89	58	--	2090	4230**	--	--

Based on simple beam condition using an allowable design stress of 172 MPa in accordance with MFMA, with adequate lateral bracing. Actual yield point of cold rolled steel is 289 MPa. To determine concentrated load capacity at mid span, multiply uniform load by 0.5 and corresponding deflection by 0.8. *Failure determined by weld shear.

**Where the slenderness ratio $\frac{KL}{r}$ exceeds 200, and K = end fixity factor, L = actual length and r = radius of gyration.

Beam & Column Loading for B54 Channel

		Beam Loading			Column Loading				
			Uniform Load @ Deflection =		Max. Loading K = .80		Max. Loading (Loaded @ C.G.)		
Beam Span mm	Uniform Load N	Deflection mm	1/240 Span N	1/360 Span N	Loaded @ C.G. N	Loaded @ Slot Face N	K = .65 N	K = 1.0 N	K = 1.2 N
305	3870	0.68	3870	3870	27516	11503	27952	26831	26053
609	2068	1.74	1913	1276	24305	10026	25635	22099	19127
914	1379	6.17	849	565	19127	8078	22432	13683	9501
1219	1036	10.97	480	320	12023	5965	17437	7695	5342
1524	827	17.17	307	204	7695	4426	11659	4924**	3420**
1829	689	24.71	213	142	5342	3394	8096	3420**	2375**
2133	591	33.63	155	102	3928**	2682	5947	2513**	--
2438	516	43.94	120	80	3007**	2166	4555**	--	--
2743	458	55.60	93	62	2375**	1784	3598**	--	--
3048	413	68.65	17	11	--	1494	2913**	--	--

Based on simple beam condition using an allowable design stress of 172 MPa in accordance with MFMA, with adequate lateral bracing. Actual yield point of cold rolled steel is 289 MPa. To determine concentrated load capacity at mid span, multiply uniform load by 0.5 and corresponding deflection by 0.8. *Failure determined by weld shear.

**Where the slenderness ratio $\frac{KL}{r}$ exceeds 200, and K = end fixity factor, L = actual length and r = radius of gyration.

All dimensions are in millimeters unless otherwise specified.

Channel Nuts

B-Line channel nut is one of the main components of our bolted metal framing system. It is designed to provide essential gripping power and ease during installation. Channel nuts are press formed, machined and hardened from steel.

Recommended Torque

Bolt Size	M6x1	M8 x1.25	M10 x 1.5	M12x1.75
Nm	12	17	36	62

Materials & Finishes*

Finish Code	Finish	Specification
ZN	Electro-Plated Zinc	AS 1897 / ASTM B633 SC1 Type III
HDG	Hot-Dipped Galvanized	AS 1214 / ASTM A153
SS6	Stainless Steel	Type 316

*Unless otherwise noted.
Note: Channel nuts are not available in HDG.

Metric

Unless noted, all metric dimensions are in millimeters.

Note: See below for resistance to slip and pull-out strength.

- Finish: ZN, SS6

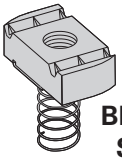

BMS-_M Series

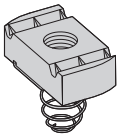

BMS-_S Series

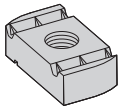

BMS-_ Series

Spring Nut

Part No.	Thread Size	Fits Channel Sizes	Nut Thickness mm	Wt./C kg
BMS-6M	M6 x 1	B22	6.3	3.13
BMS-6S	M6 x 1	B52	6.3	3.13
BMS-6	M6 x 1	B22 & B52	6.3	3.13
BMS-8M	M8 x 1.25	B22	6.3	3.04
BMS-8S	M8 x 1.25	B52	6.3	3.04
BMS-8	M8 x 1.25	B22 & B52	6.3	3.04
BMS-10M	M10 x 1.5	B22	9.5	4.35
BMS-10S	M10 x 1.5	B52	9.5	4.35
BMS-10	M10 x 1.5	B22 & B52	9.5	4.35
BMS-12M	M12 x 1.75	B22	9.5	4.17
BMS-12S	M12 x 1.75	B52	9.5	4.17
BMS-12	M12 x 1.75	B22 & B52	9.5	4.17

Resistance To Slip

- With Safety Factor of 3

Thread Size	Nut Part Numbers	2.6mm Channel ZN kN	2.6mm Channel SS6 kN	1.9mm Channel ZN kN	1.9mm Channel SS6 kN
M6 x 1	**BMS-6M, BMS-6S, BMS-6, NWM6**	1.33	0.65	1.33	0.65
M8 x 1.25	**BMS-8M, BMS-8S, BMS-8, NWM8**	2.00	1.00	2.00	1.00
M10 x 1.50	**BMS-10M, BMS-10S, BMS-10, NWM10**	3.56	1.78	2.76	1.38
M12 x 1.75	**BMS-12M, BMS-12S, BMS-12, NWM12**	6.67	3.33	4.45	2.22

Resistance to Slip of Channel Nut

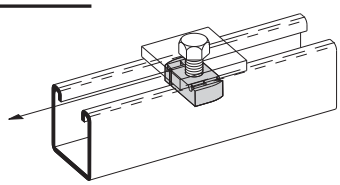

Pull-Out Strength

- With Safety Factor of 3

Thread Size	Nut Part Numbers	2.6mm Channel kN	1.9mm Channel kN
M6 x 1	**BMS-6M, BMS-6S, BMS-6, NWM6**	2.00	2.00
M8 x 1.25	**BMS-8M, BMS-8S, BMS-8, NWM8**	3.33	3.33
M10 x 1.50	**BMS-10M, BMS-10S, BMS-10, NWM10**	4.89	4.45
M12 x 1.75	**BMS-12M, BMS-12S, BMS-12, NWM12**	6.67	6.23

Pull-Out Strength of Channel Nut

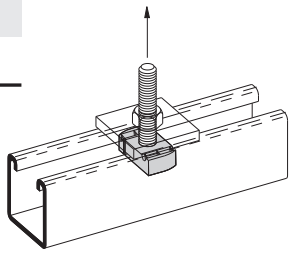

All dimensions are in millimeters unless otherwise specified.

Combo Nut Washer

- Finish: Zinc Plated (ZN) or 316 Stainless Steel (SS6) - add SS6 to part number
- To lock combo nut washer in place a hex nut (sold separately) is required

Note: See page 18 for resistance to slip & pull-out strength.

Patent Number 7,604,444

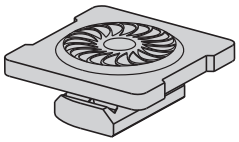

Part No.	Thread Size	Fits Channel Sizes	Nut Thickness mm	Wt./C kg
NWM6	M6	All Channel Sizes	6.3	7.50
NWM8	M8	All Channel Sizes	6.3	7.00
NWM10	M10	All Channel Sizes	9.5	8.57
NWM12	M12	All Channel Sizes	9.5	8.00

Buzznut™ Hardware

- Can be installed at any desired position on the ATR, eliminating the need to thread hex nuts up along ATR.
- Loading Safety Factor of 3.
- Torque: 8N•m
- Available in Zinc Plated (ZN) or 316 Stainless Steel (SS6).

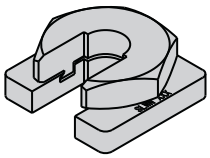

Part No.	Thread Size	Loading kN	Wt./C kg
SLWNM6	M6	0.90	6.4
SLWNM8	M8	1.70	7.4
SLWNM10	M10	2.60	7.8
SLWNM12	M12	3.70	8.6

SLN Slip On Lock Nut

- Safety Factor of 3
- Standard finish: Zinc Plated (ZN) or 316 Stainless Steel (SS6)

Part No.	Thread Size	Wt./C kg
SLNM6	M6	5.8
SLNM8	M8	6.8
SLNM10	M10	7.2
SLNM12	M12	8.0

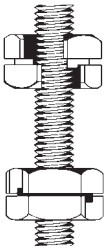

B217P
Plastic Snap Closure Strip For All 41.3mm Wide Channels

- Standard finishes: Gray (GRY) Plastic
- Standard length: 3m
- Wt./30.5m: 4.2kg

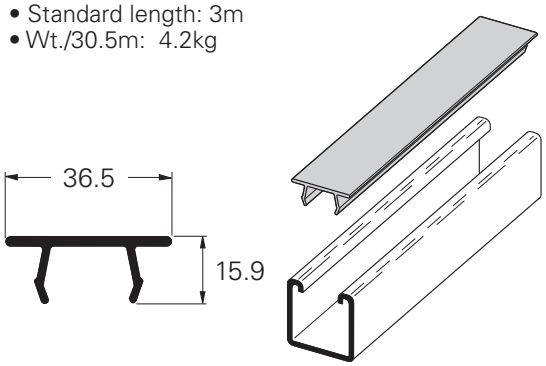

B825 Series
Plastic End Caps

- Material: Polyurethane
- Available in colors: Gray (GRY)

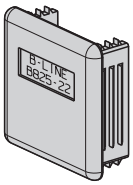

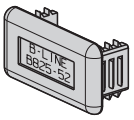

Part No.	Fits Channel Sizes	Wt./C kg
B825-22	B22	0.9
B825-52	B52	0.4

All dimensions are in millimeters unless otherwise specified.

HHCS
Hex Head Cap Screws
- Standard finish: HDG, Stainless Steel Type 316

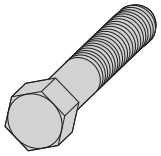

Part No.	Wt./C kg
M6x20 HHCS	0.63
M6x25 HHCS	0.77
M8x20 HHCS	1.04
M8x25 HHCS	1.27
M10x25 HHCS	1.90
M12x20 HHCS	3.48
M12x25 HHCS	3.81
M12x30 HHCS	4.17

HN
Hex Nuts
- Standard finish: HDG, Stainless Steel Type 316

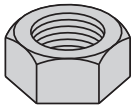

Part No.	Wt./C kg
M6 HN	0.32
M8 HN	0.45
M10 HN	0.68
M12 HN	1.63

FW
FLAT WASHERS
- Standard finish: HDG, Stainless Steel Type 316

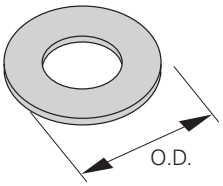

Part No.	O.D. Outside Dia. mm	Wt./C kg
FW M6	18.7	0.32
FW M8	22.2	0.63
FW M10	25.4	0.77
FW M12	34.9	1.77

ATR
All Threaded Rod
- Available in 3000mm lengths
- Safety Factor of 5 on recommended load
- Standard finish: HDG, Stainless Steel Type 316

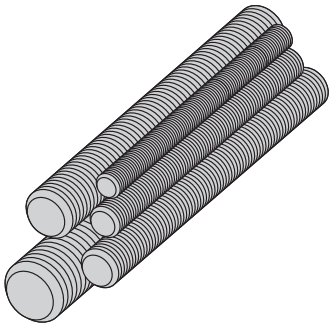

Part No. & Size	Threads Size	Recommended Load kN	Wt./30.5m kg
ATR M6	M6	1.32	6.1
ATR M8	M8	2.42	10.7
ATR M10	M10	3.66	15.3
ATR M12	M12	5.35	24.4

All dimensions are in millimeters unless otherwise specified.

A selection of fittings and accessories are available to complete B-Line bolted strut system.

Dimensions

The following dimensions apply to all fittings except as noted.

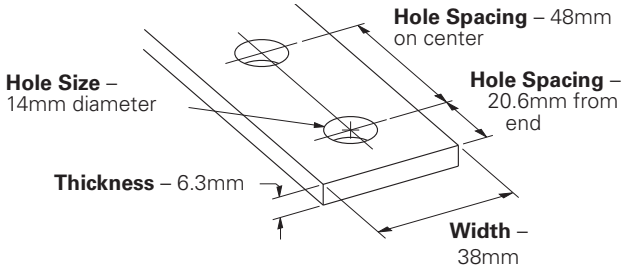

Materials & Finishes (Unless otherwise noted)

Finish Code	Finish	Specification
PLN	Plain	AS/NZS 1594 / ASTM A1018
HDG	Hot-Dipped Galvanized	AS/NZS 4680 / ASTM A123
SS6	Stainless Steel	Type 316

Note: A minimum order may apply on special material and finishes.

Load Data

The load data published includes safety factor of 2.5 when used with 2.6mm channel (safety factor = ratio of ultimate load to the design load).

Use M12 x 20 hex head cap screws and BMS-12 channel nuts for the rated results.

Recommended Bolt Torque

Bolt Size	M6	M8	M10	M12
Nm	12	17	36	62

Hardware

Nuts and bolts are not included with the fittings and must be ordered separately, unless noted.

Metric

All dimensions are in millimeters unless noted otherwise.

B200 Series Square Washer

- Standard finishes: HDG, SS6

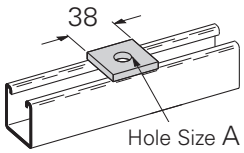

B200-D Series No-Twist Square Washer

- Standard finishes: HDG, SS6

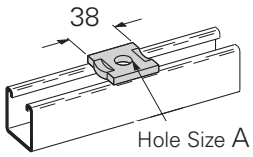

Part No.	A	Bolt Size	Wt./C kg
B201	11.1	M10	7.7
B202	14.2	M12	7.7
B201-D	11.1	M10	7.7
B202-D	14.2	M12	7.7

B129 Two-Hole Splice Plate

- Standard finishes: HDG, SS6
- Wt./C: 16.8kg

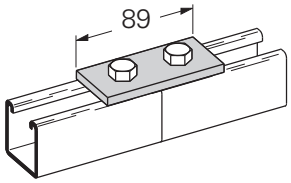

B140 Three-Hole Corner Plate

- Standard finishes: HDG, SS6
- Wt./C: 25.4kg

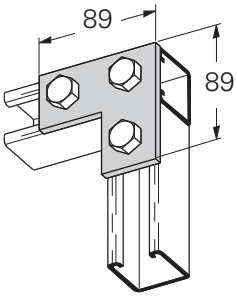

B141 Three-Hole Splice Plate

- Standard finishes: HDG, SS6
- Wt./C: 24.9kg

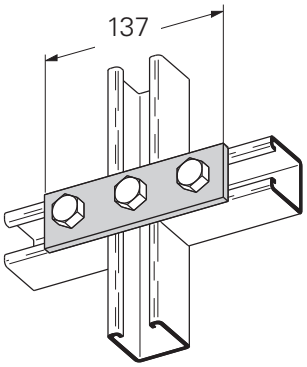

B341 Four-Hole Splice Plate

- Standard finishes: HDG, SS6
- Wt./C: 34.5kg

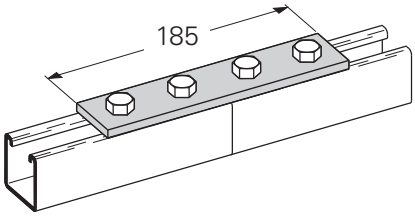

B133 Four-Hole Tee Plate

- Standard finishes: HDG, SS6
- Wt./C: 34.0kg

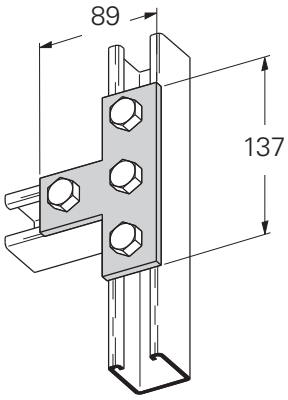

B143 Four-Hole Corner Angle

- Standard finishes: HDG, SS6
- Wt./C: 34.0kg

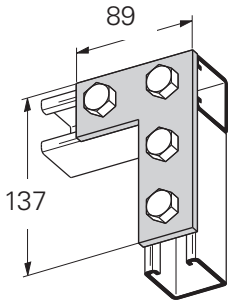

B101 Two-Hole Corner Angle

- Standard finishes: HDG, SS6
- Wt./C: 16.8kg

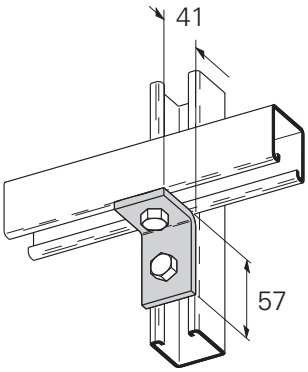

All dimensions are in millimeters unless otherwise specified.

B230
Two-Hole Corner Angle
- Standard finishes: HDG, SS6
- Wt./C: 16.8kg

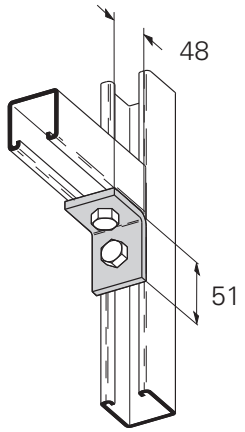

B102
Three-Hole Corner Angle
- Standard finishes: HDG, SS6
- Wt./C: 25.4kg

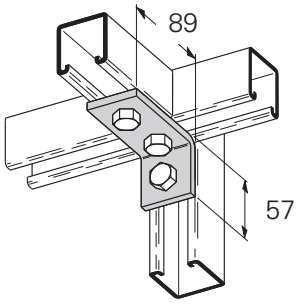

B103
Three-Hole Corner Angle
- Standard finishes: HDG, SS6
- Wt./C: 25.4kg

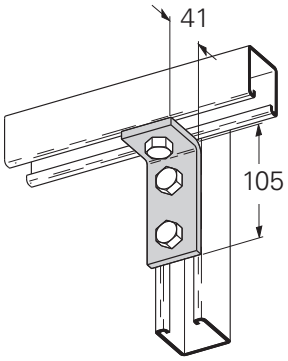

B104
Four-Hole Corner Angle
- Standard finishes: HDG, SS6
- Wt./C: 35.4kg

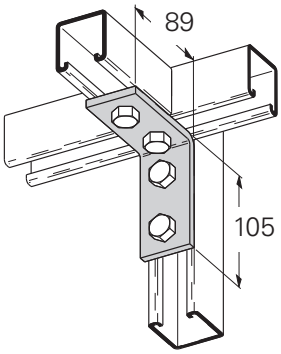

B409
Single Channel Bracket
- Safety Factor of 2.5
- Standard finishes: HDG, SS6

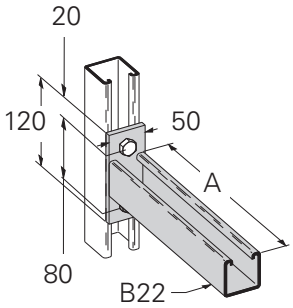

Part No.	A	Uniform Load kN	Wt./C kg
B409-300	300	4.27	105.2
B409-600	600	2.13	204.1

B107
Five Hole U-Support
- Standard finishes: HDG, SS6
- Wt./C: 38.5kg

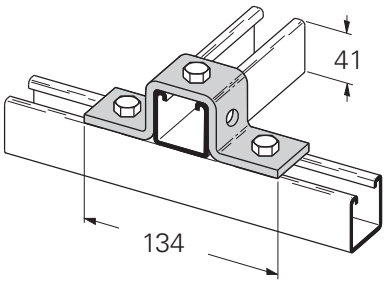

B297
Double Channel Bracket
- Safety Factor of 2.5
- Standard finishes: HDG, SS6

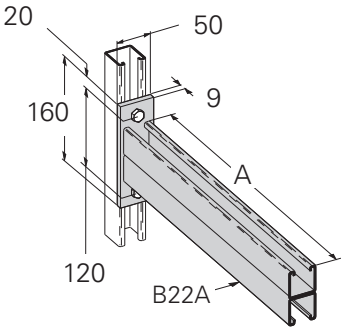

Part No.	A	Uniform Load kN	Wt./C kg
B297-750	750	2.95	471.7
B297-1000	1000	2.06	653.2

All dimensions are in millimeters unless otherwise specified.

B279FL
Post Base For B22
- Standard finishes: HDG, SS6
- Wt./C: 104.3kg

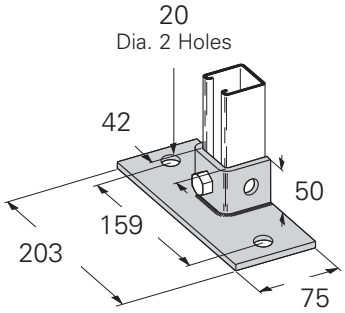

B281AFL
Post Base For B22A
- Standard finishes: HDG, SS6
- Wt./C: 113.4kg

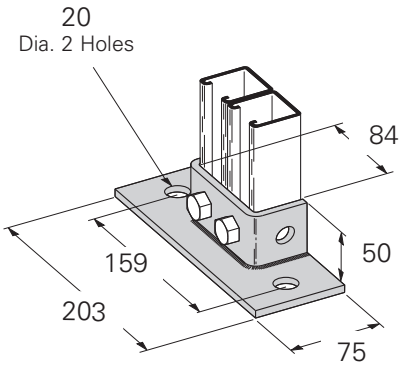

B441-22
Beam Clamp (Sold in Pieces)
- Design Load 5.34kN when used in pairs
- Safety Factor of 5
- 19.0mm Max. Flange Thickness
- For use with 20.6mm to 41.3mm high channel
- Recommended Torque: 16.9N•m
- Other flange thickness variations are available, contact B-Line Engineering for sizes
- Standard finishes: HDG, SS6
- Wt./C: 39.4kg

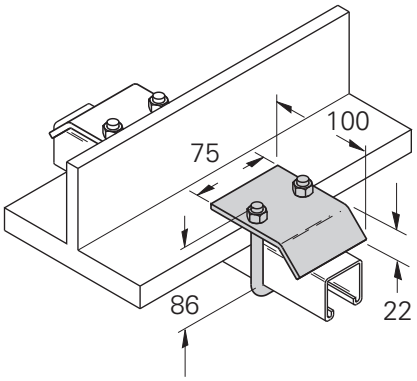

B441-22A
Beam Clamp (Sold in Pieces)
- Design Load 5.34kN when used in pairs
- Safety Factor of 5
- 19.0mm Max. Flange Thickness
- For use with 41.3mm to 82.5mm high channel
- Recommended Torque: 16.9N•m
- Other flange thickness variations are available, contact B-Line Engineering for sizes
- Standard finishes: HDG, SS6
- Wt./C: 42.2kg

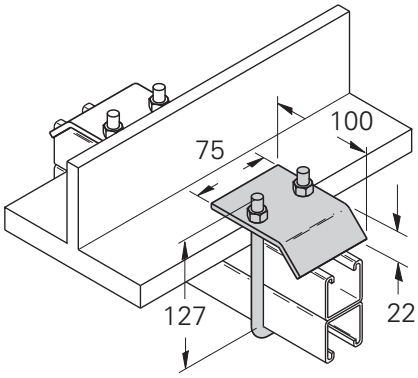

All dimensions are in millimeters unless otherwise specified.

Cable Tray & Ladder Straight Sections

Prefix
Example: RWI 04 A 09 SL - 12 - 120
① ② ③ ④ ⑤ ⑥ ⑦

① Tray Series
② Height
③ Material
④ Rung Spacing
⑤ Straight Ladder
⑥ Width
⑦ Length

Catalog No.	Page
Aluminum NEMA 12B Cable Ladder	
RWI 04 A ④ SL - ⑥ - ⑦	AL-3
RWI 05 A ④ SL - ⑥ - ⑦	AL-3
RWI 06 A ④ SL - ⑥ - ⑦	AL-3
RWI 07 A ④ SL - ⑥ - ⑦	AL-3

Material
A = Aluminum

Prefix
Example: 24 A 09 - 24 - 144
① ② ③ ④ ⑤

① Tray Series
② Material
③ Rung Spacing
④ Width
⑤ Length

Catalog No.	Page
Aluminum Series 2, 3, 4, & 5 Cable Ladder	
24 A ③ - ④ - ⑤	AL-25 & AL-26
25 A ③ - ④ - ⑤	AL-27 & AL-28
26 A ③ - ④ - ⑤	AL-29 & AL-20
34 A ③ - ④ - ⑤	AL-25 & AL-26
35 A ③ - ④ - ⑤	AL-27 & AL-28
36 A ③ - ④ - ⑤	AL-29 & AL-30
37 A ③ - ④ - ⑤	AL-31 & AL-32
46 A ③ - ④ - ⑤	AL-29 & AL-30
47 A ③ - ④ - ⑤	AL-31 & AL-32
57 A ③ - ④ - ⑤	AL-31 & AL-32
H46 A ③ - ④ - ⑤	AL-29 & AL-30
H47 A ③ - ④ - ⑤	AL-31 & AL-32

Materials
A = Aluminum

Prefix
Example: P 050 V B * 15 SS - 200 - 3000
① ② ③ ④ ⑤ ⑥ ⑦ ⑧ ⑨

① Tray Type
② Height
③ Bottom Type
④ Return Flange Type
⑤ Material
⑥ Thickness
⑦ Straight Section
⑧ Width
⑨ Length

Catalog No.	Page
Perforated & Solid Cable Tray	
P025 ③ B ⑤ ⑥ SS - ⑧ - ⑨	PS-4
P050 ③ B ⑤ ⑥ SS - ⑧ - ⑨	PS-5
P075 ③ B ⑤ ⑥ SS - ⑧ - ⑨	PS-6
P100 ③ B ⑤ ⑥ SS - ⑧ - ⑨	PS-7

Materials
G = Hot Dipped Galvanized Steel
P = Pre-Galvanized Steel
SS6 = 316 Stainless Steel
A = Aluminum

Prefix
Example: 148 P 09 SL - 24 - 144
① ② ③ ④ ⑤ ⑥

① Tray Series
② Material
③ Rung Spacing
④ Rung Type
⑤ Width
⑥ Length

Catalog No.	Page
Steel Cable Ladder Series 1	
148 ② ③ ④ - ⑤ - ⑥	LDS-3 & LDS-4
156 ② ③ ④ - ⑤ - ⑥	LDS-3 & LDS-4
168 ② ③ ④ - ⑤ - ⑥	LDS-3 & LDS-4
176 ② ③ ④ - ⑤ - ⑥	LDS-3 & LDS-4

Materials
G = Hot Dipped Galvanized Steel
P = Pre-Galvanized Steel

Cable Tray & Ladder Straight Sections

Prefix

Example: **125 X 200 C D 12I LL - 0600 - 3000**

① ② ③ ④ ⑤ ⑥ ⑦ ⑧ ⑨

① Height
② Material
③ Rung Spacing
④ Rung Shape
⑤ Rung Orientation
⑥ Side Rail Series
⑦ Straight Section
⑧ Width
⑨ Length

Catalog No.	Page

Slotted Steel Cable Ladder

125 G ③ C D 15I LL - ⑧ - ⑨	CL-4
125 G ③ C D 20I LL - ⑧ - ⑨	CL-4
125 X ③ C D 12I LL - ⑧ - ⑨	CL-3
125 X ③ C D 15I LL - ⑧ - ⑨	CL-4
125 X ③ C D 20I LL - ⑧ - ⑨	CL-4
150 G ③ C D 15I LL - ⑧ - ⑨	CL-4
150 G ③ C D 20I LL - ⑧ - ⑨	CL-4
150 X ③ C D 12I LL - ⑧ - ⑨	CL-3
150 X ③ C D 15I LL - ⑧ - ⑨	CL-4
150 X ③ C D 20I LL - ⑧ - ⑨	CL-4

Materials
G = Hot Dipped Galvanized Steel
X = 316 Stainless Steel

Prefix

Example: **P 050 V C F SS - 150 - 3000**

① ② ③ ④ ⑤ ⑥ ⑦ ⑧

① Cable Tray
② Height
③ Bottom Type
④ Flange Type
⑤ Material
⑥ Straight Section
⑦ Width
⑧ Length

Catalog No.	Page

Fiberglass Cable Tray

P 050 ③ C ⑤ SS - ⑦ - 3000	GRP-3
P 100 ③ C ⑤ SS - ⑦ - 3000	GRP-4

Materials
F = Polyester Resin
FD = Polyester Resin w/ Carbon Surface Veil
FZ = Zero Halogen Resin
FD = Zero Halogen Resin w/ Carbon Surface Veil

Prefix

Example: **100 F 225 N D 02C LL - 300 - 3000**

① ② ③ ④ ⑤ ⑥ ⑦ ⑧ ⑨

① Height
② Material
③ Rung Spacing
④ Rung Shape
⑤ Rung Orientation
⑥ Tray Series
⑦ Straight Section
⑧ Width
⑨ Length

Catalog No.	Page

Fiberglass Cable Ladder

075 ② ③ ④ D 02C LL - ⑧ - ⑨	GRP-23
100 ② ③ ④ D 02C LL - ⑧ - ⑨	GRP-23
150 ② ③ ④ D 03C LL - ⑧ - ⑨	GRP-24
150 ② ③ ④ D 04C LL - ⑧ - ⑨	GRP-25
150 ② ③ ④ D 05C LL - ⑧ - ⑨	GRP-26

Materials
F = Polyester Resin
FD = Polyester Resin w/ Carbon Surface Veil
FZ = Zero Halogen Resin
FD = Zero Halogen Resin w/ Carbon Surface Veil

Cable Tray & Ladder Covers

Prefix
Example: 86 7 A 40 SL - 12 - 120
① ② ③ ④ ⑤ ⑥ ⑦

① Cover Type
② Detail
③ Material
④ Material Thickness
⑤ Straight Section
⑥ Width
⑦ Length

Catalog No.	Page
NEMA 12B Aluminum Cable Ladder Straight Section Covers	
86 7 A 40 SL - ⑥ - ⑦	AL-7
87 7 A 40 SL - ⑥ - ⑦	AL-7
Material A = Aluminum	

Prefix
Example: 86 7 A 40 V(I or O) - 24 - 90 R24 - 4
① ② ③ ④ ⑤ ⑥ ⑦ ⑧ ⑨

① Cover Type
② Detail
③ Material
④ Material thickness
⑤ Fitting Type
⑥ Width
⑦ Angle
⑧ Radius
⑨ Side Rail Height (VO)

Catalog No.	Page
NEMA 12B Aluminum Cable Ladder Vertical Bend (VI or VO) Covers	
86 7 A 40 VI - ⑥ - ⑦ ⑧	AL-8
87 7 A 40 VI - ⑥ - ⑦ ⑧	AL-8
86 7 A 40 VO - ⑥ - ⑦ ⑧ - ⑨	AL-8
87 7 A 40 VO - ⑥ - ⑦ ⑧ - ⑨	AL-8
Materials A = Aluminum	

Prefix
Example: 86 7 A 40 HB - 18 - 90 R24 - 4
① ② ③ ④ ⑤ ⑥ ⑦ ⑧ ⑨

① Cover Type
② Detail
③ Material
④ Material thickness
⑤ Fitting Type
⑥ Width
⑦ Angle
⑧ Radius
⑨ Side Rail Height (VTD)

Catalog No.	Page
NEMA 12B Aluminum Cable Ladder Standard Fitting Covers	
867 A 40 HB - ⑥ - ⑦ ⑧	AL-8
877 A 40 HB - ⑥ - ⑧	AL-8
867 A 40 HT - ⑥ - ⑧	AL-8
877 A 40 HT - ⑥ - ⑧	AL-8
867 A 40 HX - ⑥ - ⑧	AL-8
877 A 40 HX - ⑥ - ⑧	AL-8
867 A 40 VTD - ⑥ - ⑧ - ⑨	AL-8
877 A 40 VTD - ⑥ - ⑧ - ⑨	AL-8
867 A 40 VTU - ⑥ - ⑧	AL-8
877 A 40 VTU - ⑥ - ⑧	AL-8
Materials A = Aluminum	

Prefix
Example: 86 7 A 40 RX - 12 - 24 R24
① ② ③ ④ ⑤ ⑥ ⑦ ⑧

① Cover Type
② Detail
③ Material
④ Material thickness
⑤ Fitting Type
⑥ Width 1
⑦ Width 2
⑧ Radius

Catalog No.	Page
NEMA 12B Aluminum Cable Ladder Expanding/Reducing Covers	
867 A 40 ET - ⑥ - ⑦ ⑧ (Expanding Tee)	AL-8
877 A 40 ET - ⑥ - ⑦ ⑧ (Expanding Tee)	AL-8
867 A 40 RT - ⑥ - ⑦ ⑧ (Reducing Tee)	AL-8
877 A 40 RT - ⑥ - ⑦ ⑧ (Reducing Tee)	AL-8
867 A 40 RX - ⑥ - ⑦ ⑧ (Exp./Red. Cross)	AL-8
877 A 40 RX - ⑥ - ⑦ ⑧ (Exp./Red. Cross)	AL-8
Materials A = Aluminum	

Cable Tray & Ladder Covers

Prefix
Example: **80 7 A 40 - 24 - 144**
① ② ③ ④ ⑤ ⑥

① Cover Type
② Detail
③ Material
④ Material Thickness
⑤ Width
⑥ Length

Catalog No.	Page
Series 2, 3, 4, 5 Aluminum Cable Ladder Straight Section Covers	
80 6 A 40 - ⑤ - ⑥	AL-45
80 7 A 40 - ⑤ - ⑥	AL-45
81 6 A 40 - ⑤ - ⑥	AL-45
81 7 A 40 - ⑤ - ⑥	AL-45
82 6 A 40 - ⑤ - ⑥	AL-45
82 7 A 40 - ⑤ - ⑥	AL-45

Material
A = Aluminum

Prefix
Example: **80 7 A 40 - 18 - LR 12**
① ② ③ ④ ⑤ ⑥ ⑦

① Cover Type
② Detail
③ Material
④ Material Thickness
⑤ Width 1
⑥ Fitting Type
⑦ Width 2

Catalog No.	Page
Series 2, 3, 4, 5 Aluminum Cable Ladder Reducer Fittings	
80 ② A 40 - ⑤ - LR ⑦	AL-45
80 ② A 40 - ⑤ - RR ⑦	AL-45
80 ② A 40 - ⑤ - SR ⑦	AL-45
81 ② A 40 - ⑤ - LR ⑦	AL-45
81 ② A 40 - ⑤ - RR ⑦	AL-45
81 ② A 40 - ⑤ - SR ⑦	AL-45
82 ② A 40 - ⑤ - LR ⑦	AL-45
82 ② A 40 - ⑤ - RR ⑦	AL-45
82 ② A 40 - ⑤ - SR ⑦	AL-45

Material
A = Aluminum

Prefix
Example: **80 7 A 40 - 24 - 90 HB 24 - 4**
① ② ③ ④ ⑤ ⑥ ⑦ ⑧ ⑨

① Cover Type
② Detail
③ Material
④ Material Thickness
⑤ Width
⑥ Angle (HB, VI, VO)
⑦ Fitting Type
⑧ Radius
⑨ Side Rail Height (VO, VT, CSF)

Catalog No.	Page
Series 2, 3, 4, 5 Aluminum Cable Ladder Fitting Covers	
80 ② A 40 - ⑤ - ⑥ HB ⑧	AL-45
81 ② A 40 - ⑤ - ⑥ HB ⑧	AL-45
82 ② A 40 - ⑤ - ⑥ HB ⑧	AL-45
80 ② A 40 - ⑤ - HT ⑧	AL-45
81 ② A 40 - ⑤ - HT ⑧	AL-45
82 ② A 40 - ⑤ - HT ⑧	AL-45
80 ② A 40 - ⑤ - HX ⑧	AL-45
81 ② A 40 - ⑤ - HX ⑧	AL-45
82 ② A 40 - ⑤ - HX ⑧	AL-45
80 ② A 40 - ⑤ - ⑥ VI ⑧	AL-45
81 ② A 40 - ⑤ - ⑥ VI ⑧	AL-45
82 ② A 40 - ⑤ - ⑥ VI ⑧	AL-45
80 ② A 40 - ⑤ - ⑥ VO ⑧ - ⑨	AL-45
81 ② A 40 - ⑤ - ⑥ VO ⑧ - ⑨	AL-45
82 ② A 40 - ⑤ - ⑥ VO ⑧ - ⑨	AL-45
80 ② A 40 - ⑤ - VT ⑧ - ⑨	AL-45
81 ② A 40 - ⑤ - VT ⑧ - ⑨	AL-45
82 ② A 40 - ⑤ - VT ⑧ - ⑨	AL-45
80 ② A 40 - ⑤ - VTU ⑧	AL-45
81 ② A 40 - ⑤ - VTU ⑧	AL-45
82 ② A 40 - ⑤ - VTU ⑧	AL-45
80 ② A 40 - ⑤ - HYL	AL-45
81 ② A 40 - ⑤ - HYL	AL-45
82 ② A 40 - ⑤ - HYL	AL-45
80 ② A 40 - ⑤ - HYR	AL-45
81 ② A 40 - ⑤ - HYR	AL-45
82 ② A 40 - ⑤ - HYR	AL-45
80 ② A 40 - ⑤ - CSF ⑧ - ⑨	AL-45
81 ② A 40 - ⑤ - CSF ⑧ - ⑨	AL-45
82 ② A 40 - ⑤ - CSF ⑧ - ⑨	AL-45

Material
A = Aluminum

Cable Tray & Ladder Covers

Prefix
Example: **PCF S C * SS - 300 - 3000**
① ② ③ ④ ⑤ ⑥ ⑦

① Cover Type
② Top Style
③ Frange Style
④ Material & Thickness
⑤ Straight Section
⑥ Width
⑦ Length

Catalog No.	Page

Perforated & Solid Cable Tray Straight Section Covers

PCF L B ④ SS - ⑥ - ⑦	PS-23
PCF L C ④ SS - ⑥ - ⑦	PS-23
PCF S B ④ SS - ⑥ - ⑦	PS-23
PCF S C ④ SS - ⑥ - ⑦	PS-23

* Material
P15 = Pre Galvanized, 1.5mm thick
G12 = HDGAF, 1.2mm thick
G15 = HDGAF, 1.5mm thick
SS615 = Stainless Steel 316, 1.5mm thick
A10 = Aluminum, 1.0mm thick

Prefix
Example: **PCF S * HB - 500 - 60 R600 - 050**
① ② ③ ④ ⑤ ⑥ ⑦ ⑧

① Cover Type
② Top Style
③ Material
④ Fitting Type
⑤ Width
⑥ Angle (HB, VI, VO)
⑦ Radius
⑧ Tray Height (VO)

Catalog No.	Page

Perforated & Solid Cable Tray Fitting Covers

PCF ② ③ HB - ⑤ - ⑥ ⑦	PS-23
PCF ② ③ HT - ⑤ - ⑦	PS-23
PCF ② ③ HX - ⑤ - ⑦	PS-23
PCF ② ③ VI - ⑤ - ⑥ ⑦	PS-23
PCF ② ③ VO - ⑤ - ⑥ ⑦ - ⑧	PS-23

* Material
P15 = Pre Galvanized, 1.5mm thick
G12 = HDGAF, 1.2mm thick
G15 = HDGAF, 1.5mm thick
SS615 = Stainless Steel 316, 1.5mm thick
A10 = Aluminum, 1.0mm thick

Prefix
Example: **PCF S * RR - 300 - 150**
① ② ③ ④ ⑤ ⑥

① Cover Type
② Top Style
③ Material
④ Fitting Type
⑤ Width 1
⑥ Width 2

Catalog No.	Page

Perforated & Solid Cable Tray Reducer Covers

PCF ② ③ LR - ⑤ - ⑥	PS-23
PCF ② ③ RR - ⑤ - ⑥	PS-23
PCF ② ③ SR - ⑤ - ⑥	PS-23

Materials
P15 = Pre Galvanized, 1.5mm thick
G12 = HDGAF, 1.2mm thick
G15 = HDGAF, 1.5mm thick
SS615 = Stainless Steel 316, 1.5mm thick
A10 = Aluminum, 1.0mm thick

Cable Tray & Ladder Covers

Prefix
Example: 80 1 P - 20 - 24 - 144
① ② ③ ④ ⑤ ⑥

① Cover Type
② Detail
③ Material
④ Thickness
⑤ Width
⑥ Length

Catalog No.	Page
Steel Cable Ladder Series 1 Straight Section Covers	
801 ③ - ④ - ⑤ - ⑥	LDS-9
811 ③ - ④ - ⑤ - ⑥	LDS-9

Material
P = Pre Galvanized
G = HDGAF

Prefix
Example: 80 1 P 20 - 24 - LR - 12
① ② ③ ④ ⑤ ⑥ ⑦

① Cover Type
② Detail
③ Material
④ Thickness
⑤ Width 1
⑥ Fitting Type
⑦ Width 2

Catalog No.	Page
Steel Cable Ladder Series 1 Fitting Covers	
801 ③ ④ - ⑤ - LR - ⑥	LDS-10
811 ③ ④ - ⑤ - LR - ⑥	LDS-10
801 ③ ④ - ⑤ - RR - ⑥	LDS-10
811 ③ ④ - ⑤ - RR - ⑥	LDS-10
801 ③ ④ - ⑤ - SR - ⑥	LDS-10
811 ③ ④ - ⑤ - SR - ⑥	LDS-10

Material
P = Pre Galvanized
G = HDGAF

Prefix
Example: 80 1 P - 20 - 24 - 90 HB 24 - 4
① ② ③ ④ ⑤ ⑥ ⑦ ⑧ ⑨

① Cover Type
② Detail
③ Material
④ Thickness
⑤ Width
⑥ Angle (HB, VI, VO)
⑦ Fitting Type
⑧ Radius
⑨ Side Rail Height (VO)

Catalog No.	Page
Steel Cable Ladder Series 1 Fitting Covers	
801 ③ ④ - ⑤ - ⑥ HB - ⑧	LDS-10
811 ③ ④ - ⑤ - ⑥ HB - ⑧	LDS-10
801 ③ ④ - ⑤ - HT - ⑧	LDS-10
811 ③ ④ - ⑤ - HT - ⑧	LDS-10
801 ③ ④ - ⑤ - HX - ⑧	LDS-10
811 ③ ④ - ⑤ - HX - ⑧	LDS-10
801 ③ ④ - ⑤ - ⑥ VI - ⑧	LDS-10
811 ③ ④ - ⑤ - ⑥ VI - ⑧	LDS-10
801 ③ ④ - ⑤ - ⑥ VO - ⑧ - ⑨	LDS-10
811 ③ ④ - ⑤ - ⑥ VO - ⑧ - ⑨	LDS-10

Material
P = Pre Galvanized
G = HDGAF

Cable Tray & Ladder Covers

Prefix
Example: **CIF S G15 LL - 0600 - 3000**
① ② ③ ④ ⑤ ⑥

① Flanged Cover
② Cover Type
③ Material
④ Straight Section
⑤ Width
⑥ Length

Catalog No.	Page

Slotted Steel Cable Ladder Straight Section Covers

CIF L ③ LL - ⑤ - ⑥ CL-26
CIF P ③ LL - ⑤ - ⑥ CL-26
CIF S ③ LL - ⑤ - ⑥ CL-26

Material
P = Pre Galvanized
G = HDGAF

Prefix
Example: **CCF S X10 LRR - 0600 - 300 - R0300**
① ② ③ ④ ⑤ ⑥ ⑦

① Flanged Cover
② Cover Type
③ Material
④ Fitting Type
⑤ Width 1
⑥ Width 2
⑦ Radius

Catalog No.	Page

Slotted Steel Cable Ladder Expanding/Reducing Fitting Covers

CCF ② ③ LLR - ⑤ - ⑥ CL-27
CCF ② ③ LRR - ⑤ - ⑥ CL-27
CCF ② ③ LSR - ⑤ - ⑥ CL-27
CCF ② ③ LET - ⑤ - ⑥ ⑦ (Expanding Tee) CL-27
CCF ② ③ LRT - ⑤ - ⑥ ⑦ (Reducing Tee) CL-27
CCF ② ③ LRX - ⑤ - ⑥ ⑦ (Exp./Red. Cross) CL-27

Material
P = Pre Galvanized
G = HDGAF

Prefix
Example: **CCF S G15 LVO - 0600 - 90 R0600 - 150**
① ② ③ ④ ⑤ ⑥ ⑦ ⑧

① Cover Type
② Detail
③ Material & Thickness
④ Fitting Type
⑤ Width
⑥ Angle (HB, VI, VO)
⑦ Radius
⑧ Side Rail Height (VO)

Catalog No.	Page

Slotted Steel Cable Ladder Fitting Covers

CCF ② ③ LHB - ⑤ - ⑥ ⑦ CL-27
CCF ② ③ LVI - ⑤ - ⑥ ⑦ CL-27
CCF ② ③ LVO - ⑤ - ⑥ ⑦ - ⑧ CL-27
CCF ② ③ LHT - ⑤ - ⑦ CL-27
CCF ② ③ LHX - ⑤ - ⑦ CL-27
CCF ② ③ LVTD - ⑤ - ⑦ - ⑧ CL-27
CCF ② ③ LVTU - ⑤ - ⑦ CL-27
CCF ② ③ LCSF - ⑤ - ⑦ - ⑧ CL-27

Material
P = Pre Galvanized
G = HDGAF

Cable Tray & Ladder Covers

Prefix
Example: **PCF S F SS - 150 - 3000**
① ② ③ ④ ⑤ ⑥

① Tray Type
② Top Style
③ Material
④ Straight Section
⑤ Width
⑥ Length

Catalog No.	Page

Fiberglass Cable Tray Straight Section Covers

PCF S ③ SS - ⑤ - 3000 ..... GRP-19

Materials
F = Polyester Resin
FD = Polyester Resin w/ Carbon Surface Veil
FZ = Zero Halogen Resin
FD = Zero Halogen Resin w/ Carbon Surface Veil

Prefix
Example: **PCF S F - 300 - LR - 150**
① ② ③ ④ ⑤ ⑥

① Tray Type
② Top Style
③ Material
④ Width 1
⑤ Fitting Type
⑥ Width 2

Catalog No.	Page

Fiberglass Cable Tray Expanding/Reducing Fitting Covers

PCF S ③ - ④ - LR - ⑥ GRP-20
PCF S ③ - ④ - RR - ⑥ GRP-20
PCF S ③ - ④ - SR - ⑥ GRP-20

Materials
F = Polyester Resin
FD = Polyester Resin w/ Carbon Surface Veil
FZ = Zero Halogen Resin
FD = Zero Halogen Resin w/ Carbon Surface Veil

Prefix
Example: **PCF S F HB - 150 - 90 R0600 - 050**
① ② ③ ④ ⑤ ⑥ ⑦ ⑧

① Tray Type
② Top Style
③ Material
④ Fitting Type
⑤ Width
⑥ Angle (HB, VI, VO)
⑦ Radius
⑧ Side Rail Height (VO)

Catalog No.	Page

Fiberglass Cable Tray Fitting Covers

PCF S ③ HB - ⑤ - ⑥ - ⑦ GRP-20
PCF S ③ HT - ⑤ - ⑦ GRP-20
PCF S ③ HX - ⑤ - ⑦ GRP-20
PCF S ③ VI - ⑤ - ⑥ - ⑦ GRP-20
PCF S ③ VO - ⑤ - ⑥ - ⑦ - ⑧ GRP-20

Materials
F = Polyester Resin
FD = Polyester Resin w/ Carbon Surface Veil
FZ = Zero Halogen Resin
FD = Zero Halogen Resin w/ Carbon Surface Veil

Cable Tray & Ladder Covers

Prefix
Example: CIF S F SS - 150 - 3000
① ② ③ ④ ⑤ ⑥

① Tray Type
② Top Style
③ Material
④ Straight Section
⑤ Width
⑥ Length

Catalog No.	Page

Fiberglass Cable Ladder Straight Section Covers

CIF S ③ SS - ⑤ - 3000 ..... GRP-42

Materials
F = Polyester Resin
FD = Polyester Resin w/ Carbon Surface Veil
FZ = Zero Halogen Resin
FD = Zero Halogen Resin w/ Carbon Surface Veil

Prefix
Example: CCF S F - 300 - LR - 100
① ② ③ ④ ⑤ ⑥

① Tray Type
② Top Style
③ Material
④ Width 1
⑤ Fitting Type
⑥ Width 2

Catalog No.	Page

Fiberglass Cable Ladder Expanding/Reducing Fitting Covers

CCF S ③ - ④ - LR ⑥ GRP-42
CCF S ③ - ④ - RR ⑥ GRP-42
CCF S ③ - ④ - SR ⑥ GRP-42

Materials
F = Polyester Resin
FD = Polyester Resin w/ Carbon Surface Veil
FZ = Zero Halogen Resin
FD = Zero Halogen Resin w/ Carbon Surface Veil

Prefix
Example: CCF S F HB - 150 - 90 R0600 - 075
① ② ③ ④ ⑤ ⑥ ⑦ ⑧

① Tray Type
② Top Style
③ Material
④ Fitting Type
⑤ Width
⑥ Angle (HB, VI, VO)
⑦ Radius
⑧ Side Rail Height (VO)

Catalog No.	Page

Fiberglass Cable Ladder Fitting Covers

CCF S ③ HB - ⑤ - ⑥ - ⑦ GRP-42
CCF S ③ HT - ⑤ - ⑦ GRP-42
CCF S ③ HX - ⑤ - ⑦ GRP-42
CCF S ③ VI - ⑤ - ⑥ - ⑦ GRP-42
CCF S ③ VO - ⑤ - ⑥ - ⑦ - ⑧ GRP-42

Materials
F = Polyester Resin
FD = Polyester Resin w/ Carbon Surface Veil
FZ = Zero Halogen Resin
FD = Zero Halogen Resin w/ Carbon Surface Veil

Cable Tray & Ladder Fittings

Prefix
Example: **RWI 04 A09 HB - 09 - 30 R24**
① ② ③ ④ ⑤ ⑥

① Tray Height
② Material & Rung Spacing
③ Fitting Type
④ Width
⑤ Angle (HB, VI, VO)
⑥ Radius

Catalog No.	Page
Aluminum NEMA 12B Cable Ladder Fittings Except Reducer Fittings	
RWI ① A09 HB - ④ - ⑤ - ⑥	AL-11 & AL-12
RWI ① A09 HT - ④ - ⑥	AL-13
RWI ① A09 HX - ④ - ⑥	AL-13
RWI ① A09 VI - ④ - ⑤ - ⑥	AL-14 – AL-17
RWI ① A09 VO - ④ - ⑤ - ⑥	AL-14 – AL-17
RWI ① A09 VTD - ④ - ⑥	AL-18
RWI ① A09 VTU - ④ - ⑥	AL-18
Material A = Aluminum	

Prefix
Example: **RWI 04 A09 ET - 09 - 30 R24**
① ② ③ ④ ⑤ ⑥

① Tray Height
② Material & Rung Spacing
③ Fitting Type
④ Width
⑤ Angle (HB, VI, VO)
⑥ Radius

Catalog No.	Page
Aluminum NEMA 12B Cable Ladder Reducer Fittings	
RWI ① A09 ET - ④ - ⑤ - ⑥	AL-19
RWI ① A09 RT - ④ - ⑤ - ⑥	AL-20
RWI ① A09 RX - ④ - ⑤ - ⑥	AL-21
Material A = Aluminum	

Prefix
Example: **4 A - 24 - 90 HB 24**
① ② ③ ④ ⑤ ⑥

① Tray Height
② Material
③ Width
④ Angle (HB, VI, VO)
⑤ Fitting Type
⑥ Radius

Catalog No.	Page
Series 2, 3, 4, 5 Aluminum Cable Ladder Fittings Except Reducer/Expander Fittings	
① A - ③ - ④ HB ⑥	AL-50 & AL-51
① A - ③ HT ⑥	AL-52
① A - ③ HX ⑥	AL-52
① A - ③ - ④ VI ⑥	AL-53 – AL-56
① A - ③ - ④ VO ⑥	AL-53 – AL-56
① A - ③ VT 24 ⑥	AL-57
① A - ③ VTU 24 ⑥	AL-57
① A - ③ HYL 24 (24" radius only)	AL-58
① A - ③ HYR 24 (24" radius only)	AL-58
① A - ③ CSF ⑥	AL-59
Material A = Aluminum	

Prefix
Example: **4 A - 24 - RR - 18**
① ② ③ ④ ⑤

① Tray Height
② Material
③ Width 1
④ Fitting
⑤ Width 2

Catalog No.	Page
Aluminum NEMA 12B Cable Ladder Reducer Fittings	
① A - ③ - LR - ⑤	AL-61
① A - ③ - RR - ⑤	AL-61
① A - ③ - SR - ⑤	AL-61
Material A = Aluminum	

Cable Tray & Ladder Fittings

Prefix
Example: **4 A - 36 - 18 HT 24**
① ② ③ ④ ⑤ ⑥

① Tray Height
② Material
③ Width 1
④ Width 2
⑤ Fitting
⑥ Radius

Catalog No.	Page
Series 2, 3, 4, 5 Aluminum Cable Ladder Tee & Cross Reducer/Expanding Fittings	
① A - ③ - ④ HT ⑥ (Reducing)	AL-62
① A - ③ - ④ HT ⑥ (Expanding)	AL-63
① A - ③ - ④ HX ⑥ (Expanding/Reducing)	AL-64

Material
A = Aluminum

Prefix
Example: **PF 050 V N * 15 HB - 200 - 60 R600**
① ② ③ ④ ⑤ ⑥ ⑦ ⑧ ⑨

① Tray Height
② Bottom Type
③ No Flange
④ Material
⑤ Thickness
⑥ Fitting Type
⑦ Width
⑧ Angle (HB, VI, VO)
⑨ Radius

Catalog No.	Page
Perforated & Solid Cable Tray Fittings All Fttings Except Reducers	
PF ① ② ③ ④ ⑤ HB - ⑦ - ⑧ ⑨	PS-12 – PS-15
PF ① ② ③ ④ ⑤ HT - ⑦ - ⑨	PS-16
PF ① ② ③ ④ ⑤ HX - ⑦ - ⑨	PS-17
PF ① ② ③ ④ ⑤ VI - ⑦ - ⑧ ⑨	PS-19 – PS-22
PF ① ② ③ ④ ⑤ VO - ⑦ - ⑧ ⑨	PS-19 – PS-22

* Materials
G = Hot Dipped Galvanized Steel
P = Pre-Galvanized Steel
SS6 = 316 Stainless Steel
A = Aluminum

Prefix
Example: **PF 050 V N * 15 LR - 300 - 150**
① ② ③ ④ ⑤ ⑥ ⑦ ⑧

① Tray Height
② Bottom Type
③ No Flange
④ Material
⑤ Thickness
⑥ Fitting Type
⑦ Width 1
⑧ Width 2

Catalog No.	Page
Perforated & Solid Cable Tray Fittings Reducer Fttings	
PF ① ② ③ ④ ⑤ LR - ⑦ - ⑧	PS-18
PF ① ② ③ ④ ⑤ RR - ⑦ - ⑧	PS-18
PF ① ② ③ ④ ⑤ SR - ⑦ - ⑧	PS-18

* Materials
G = Hot Dipped Galvanized Steel
P = Pre-Galvanized Steel
SS6 = 316 Stainless Steel
A = Aluminum

Cable Tray & Ladder Fittings

Prefix

Example: 1 4 * SL - 24 - 90 HB 24

① ② ③ ④ ⑤ ⑥ ⑦ ⑧

① Series
② Height
③ Material
④ Rung Type
⑤ Width
⑥ Angle (HB, VI, VO)
⑦ Fitting Type
⑧ Radius

Catalog No.	Page

Steel Cable Ladder Series 1 Fittings Except Reducer Fittings

1 ② ③ SL - ⑤ - ⑥ HB ⑧ LDS-13
1 ② ③ SL - ⑤ HT ⑧ LDS-14
1 ② ③ SL - ⑤ HX ⑧ LDS-14
1 ② ③ SL - ⑤ - ⑥ VI ⑧ ..... LDS-16 – LDS-19
1 ② ③ SL - ⑤ - ⑥ VO ⑧ ..... LDS-16 – LDS-19

* Materials
G = Hot Dipped Galvanized Steel
P = Pre-Galvanized Steel

Prefix

Example: 1 4 * SL - 24 - RR 12

① ② ③ ④ ⑤ ⑥ ⑦

① Series
② Height
③ Material
④ Rung Type
⑤ Width 1
⑥ Fitting Type
⑦ Width 2

Catalog No.	Page

Steel Cable Ladder Series 1 Fittings Reducer Fittings

1 ② ③ SL - ⑤ - LR ⑦ LDS-15
1 ② ③ SL - ⑤ - RR ⑦ LDS-15
1 ② ③ SL - ⑤ - SR ⑦ LDS-15

* Materials
G = Hot Dipped Galvanized Steel
P = Pre-Galvanized Steel

Catalog No.	Page

Vertical Bend Segiments (VBS)

14G - Width - VBS1 ..... LDS-20
14G - Width - VBS2 ..... LDS-20
14G - Width - VBS3 ..... LDS-20
14P - Width - VBS1 ..... LDS-20
14P - Width - VBS2 ..... LDS-20
14P - Width - VBS3 ..... LDS-20

Materials
G = Hot Dipped Galvanized Steel
P = Pre-Galvanized Steel

Cable Tray & Ladder Fittings

Prefix

Example: 125 G 300 CD 20C LHB - 0600 - 90 R0600
① ② ③ ④ ⑤ ⑥ ⑦ ⑧ ⑨

① Tray Height
② Material
③ Rung Spacing
④ Rung Shape & Orientation
⑤ Side Rail
⑥ Fitting Type
⑦ Width
⑧ Angle (HB, VI, VO)
⑨ Radius

Prefix

Example: 125 G 300 CD 20C LRR - 0600 - 0300 - R0600
① ② ③ ④ ⑤ ⑥ ⑦ ⑧ ⑨

① Tray Height
② Material
③ Rung Spacing
④ Rung Shape & Orientation
⑤ Side Rail
⑥ Fitting Type
⑦ Width 1
⑧ Width 2
⑨ Radius

Slotted Steel Cable Ladder Fittings Except Reducing/Expanding Fittings

Catalog No.	Page
125 ② ③ CD ⑤ HB ⑦ - ⑧ ⑨	CL-12 – CL-13
125 ② ③ CD ⑤ HT ⑦ - ⑨	CL-18
125 ② ③ CD ⑤ HX ⑦ - ⑨	CL-18
125 ② ③ CD ⑤ LCSF ⑦ - ⑨	CL-20
125 ② ③ CD ⑤ LVTD ⑦ - ⑨	CL-19
125 ② ③ CD ⑤ LVTU ⑦ - ⑨	CL-19
125 ② ③ CD ⑤ VI ⑦ - ⑧ ⑨	CL-15 & CL-17
125 ② ③ CD ⑤ VO ⑦ - ⑧ ⑨	CL-14 & CL-16
150 ② ③ CD ⑤ HB ⑦ - ⑧ ⑨	CL-12 – CL-13
150 ② ③ CD ⑤ HT ⑦ - ⑨	CL-18
150 ② ③ CD ⑤ HX ⑦ - ⑨	CL-18
150 ② ③ CD ⑤ LCSF ⑦ - ⑨	CL-20
150 ② ③ CD ⑤ LVTD ⑦ - ⑨	CL-19
150 ② ③ CD ⑤ LVTU ⑦ - ⑨	CL-19
150 ② ③ CD ⑤ VI ⑦ - ⑧ ⑨	CL-15 & CL-17
150 ② ③ CD ⑤ VO ⑦ - ⑧ ⑨	CL-14 & CL-16

* Materials
G = Hot Dipped Galvanized Steel
SS6 = 316 Stainless Steel

Slotted Steel Cable Ladder Fittings Reducing/Expanding Fittings

Catalog No.	Page
125 ② ③ CD ⑤ LLR ⑦ - ⑧	CL-22
125 ② ③ CD ⑤ LRR ⑦ - ⑧	CL-22
125 ② ③ CD ⑤ LSR ⑦ - ⑧	CL-22
125 ② ③ CD ⑤ LET ⑦ - ⑧ ⑨	CL-23
125 ② ③ CD ⑤ LRT ⑦ - ⑧ ⑨	CL-24
125 ② ③ CD ⑤ LRX ⑦ - ⑧ ⑨	CL-25
150 ② ③ CD ⑤ LLR ⑦ - ⑧	CL-22
150 ② ③ CD ⑤ LRR ⑦ - ⑧	CL-22
150 ② ③ CD ⑤ LSR ⑦ - ⑧	CL-22
150 ② ③ CD ⑤ LET ⑦ - ⑧ ⑨	CL-23
150 ② ③ CD ⑤ LRT ⑦ - ⑧ ⑨	CL-24
150 ② ③ CD ⑤ LRX ⑦ - ⑧ ⑨	CL-25

* Materials
G = Hot Dipped Galvanized Steel
SS6 = 316 Stainless Steel

Cable Tray & Ladder Fittings

Prefix
Example: P 050 V C F HB - 150 - 90 - R600
① ② ③ ④ ⑤ ⑥ ⑦ ⑧ ⑨

① Tray Type
② Height
③ Bottom Type
④ Flange Type
⑤ Material
⑥ Fitting Type
⑦ Width
⑧ Angle (HB, VI, VO)
⑨ Radius

Catalog No.	Page

Fiberglass Cable Tray Fittings Except Reducing/Expanding Fittings

P ② ③ C ⑤ HB ⑦ - ⑧ ⑨ ..... GRP-8 – GRP-11
P ② ③ C ⑤ HT ⑦ - ⑧ GRP-12
P ② ③ C ⑤ HX ⑦ - ⑧ GRP-13
P ② ③ C ⑤ VI ⑦ - ⑧ ⑨ ..... GRP-15 – GRP-18
P ② ③ C ⑤ VO ⑦ - ⑧ ⑨ ..... GRP-15 – GRP-18

Materials
F = Polyester Resin
FD = Polyester Resin w/ Carbon Surface Veil
FZ = Zero Halogen Resin
FD = Zero Halogen Resin w/ Carbon Surface Veil

Prefix
Example: 100 F 225 ND 03C HB - 300 - 90 - R600
① ② ③ ④ ⑤ ⑥ ⑦ ⑧ ⑨

① Height
② Material
③ Rung Spaqcing
④ Rung Shape & Orientation
⑤ Side Rail Series
⑥ Fitting Type
⑦ Width
⑧ Angle (HB, VI, VO)
⑨ Radius

Catalog No.	Page

Fiberglass Cable Ladder Fittings Except Reducing/Expanding Fittings

① ② ③ ND ⑤ HB - ⑦ - ⑧ ⑨ ..... GRP-31 – GRP-34
① ② ③ ND ⑤ HT - ⑦ - ⑨ GRP-35
① ② ③ ND ⑤ HX - ⑦ - ⑨ GRP-36
① ② ③ ND ⑤ VI - ⑦ - ⑧ ⑨ ..... GRP-38 – GRP-41
① ② ③ ND ⑤ VO - ⑦ - ⑧ ⑨ ..... GRP-38 – GRP-41

Materials
F = Polyester Resin
FD = Polyester Resin w/ Carbon Surface Veil
FZ = Zero Halogen Resin
FD = Zero Halogen Resin w/ Carbon Surface Veil

Prefix
Example: P 050 V C F - 300 - SR - 200
① ② ③ ④ ⑤ ⑥ ⑦ ⑧

① Tray Type
② Height
③ Bottom Type
④ Flange Type
⑤ Material
⑥ Width 1
⑦ Fitting Type
⑧ Width 2

Catalog No.	Page

Fiberglass Cable Tray Fittings Reducer Fittings

P ② ③ C ⑤ - ⑥ LR - ⑧ GRP-14
P ② ③ C ⑤ - ⑥ RR - ⑧ GRP-14
P ② ③ C ⑤ - ⑥ SR - ⑧ GRP-14

Materials
F = Polyester Resin
FD = Polyester Resin w/ Carbon Surface Veil
FZ = Zero Halogen Resin
FD = Zero Halogen Resin w/ Carbon Surface Veil

Prefix
Example: 100 F 225 N D 03C - 300 - SR - 100
① ② ③ ④ ⑤ ⑥ ⑦ ⑧ ⑨

① Height
② Material
③ Rung Spaqcing
④ Rung Shape
⑤ Rung Orientation
⑥ Side Rail Series
⑦ Width 1
⑧ Fitting Type
⑨ Width 2

Catalog No.	Page

Fiberglass Cable Ladder Fittings Reducer Fittings

① ② ③ ④ D ⑥ - ⑦ - LR - ⑨ GRP-37
① ② ③ ④ D ⑥ - ⑦ - RR - ⑨ GRP-37
① ② ③ ④ D ⑥ - ⑦ - SR - ⑨ GRP-37

Materials
F = Polyester Resin
FD = Polyester Resin w/ Carbon Surface Veil
FZ = Zero Halogen Resin
FD = Zero Halogen Resin w/ Carbon Surface Veil

NEMA 12B Aluminum Cable Ladder Accessories

Not all accessories for aluminum cable ladder are aluminum only. Those finishes and part numbers will be listed in this section.

Catalog No.	Page
NEMA 12B Aluminum Cable Ladder Accessories	
9A-1103-width	AL-5
9A-9012	AL-7
9G-1158 Series	AL-5
9P-5506-22SH	AL-6
9P-5509-22SH	AL-6
9P-5512-22SH	AL-6
9P-5518-22SH	AL-6
9P-5524-22SH	AL-6
9P-5530-22SH	AL-6
9P-5536-22SH	AL-6
9P-5542-22SH	AL-6
9ZN-1204	AL-5
9ZN-1204NB	AL-5
9ZN-9012	AL-7
99-30	AL-5
R4A-DHB	AL-6
R4A-DSL-length	AL-6
R4A-DVI-angle radius	AL-6
R4A-DVO-angle radius	AL-6
R4A-END-width	AL-5
R4A-ESP	AL-4
R4A-FSP	AL-4
R4A-FTB-width	AL-5
R4A-HDCC-width	AL-7
R4A-RSP-C-reduction	AL-4
R4A-RSP-S-reduction	AL-4
R4A-SSP	AL-4
R4A-TTB	AL-4
R4A-VSP	AL-4
R5A-DHB	AL-6
R5A-DSL-length	AL-6
R5A-DVI-angle radius	AL-6
R5A-DVO-angle radius	AL-6
R5A-END-width	AL-5
R5A-ESP	AL-4
R5A-FSP	AL-4
R5A-FTB-width	AL-5
R5A-HDCC-width	AL-7
R5A-RSP-C-reduction	AL-4
R5A-RSP-S-reduction	AL-4
R5A-SSP	AL-4
R5A-TTB	AL-4
R5A-VSP	AL-4
R6A-DHB	AL-6
R6A-DSL-length	AL-6
R6A-DVI-angleRradius	AL-6
R6A-DVO-angleRradius	AL-6
R6A-END-width	AL-5
R6A-ESP	AL-4
R6A-FSP	AL-4
R6A-FTB-width	AL-5
R6A-HDCC-width	AL-7
R6A-RSP-C-reduction	AL-4
R6A-RSP-S-reduction	AL-4
R6A-SSP	AL-4
R6A-TTB	AL-4
R6A-VSP	AL-4
R7A-DHB	AL-6
R7A-DSL-length	AL-6
R7A-DVI-angle radius	AL-6
R7A-DVO-angle radius	AL-6
R7A-END-width	AL-5
R7A-ESP	AL-4
R7A-FSP	AL-4
R7A-FTB-width	AL-5
R7A-HDCC-width	AL-7
R7A-RSP-C-reduction	AL-4
R7A-RSP-S-reduction	AL-4
R7A-SSP	AL-4
R7A-TTB	AL-4
R7A-VSP	AL-4
RAA-DSP-45	AL-4
RAA-DSP-46	AL-4
RAA-DSP-47	AL-4
RAA-DSP-56	AL-4
RAA-DSP-57	AL-4
RAA-DSP-67	AL-4

Materials
A = Aluminum
G = Hot-Dipped Galvanized
P = Pre-Galvanized Steel
ZN = Zinc Plated

Series 2, 3, 4, & 5 Aluminum Cable Ladder Accessories

Not all accessories for aluminum cable ladder are aluminum only. Those finishes and part numbers will be listed in this section.

Catalog No.	Page
Aluminum Cable Ladder Accessories	
73A-Length	AL-36
73A-90HBFL	AL-36
73A-(angle)VI(radius)	AL-36
73A-(angle)VO(radius)	AL-36
74A-Length	AL-36
74A-90HBFL	AL-36
74A-(angle)VI(radius)	AL-36
74A-(angle)VO(radius)	AL-36
75A-Length	AL-36
75A-90HBFL	AL-36
75A-(angle)VI(radius)	AL-36
75A-(angle)VO(radius)	AL-36
76A-Length	AL-36
76A-90HBFL	AL-36
76A-(angle)VI(radius)	AL-36
76A-(angle)VO(radius)	AL-36
99-40	AL-37
99-1124	AL-35
99-1620	AL-37
99-2125-15	AL-35
99-9980-tray width	AL-47
99-9982	AL-36
99-N1	AL-37
99-NP300	AL-39
99-PE34	AL-38
99-PE36	AL-39
9A-tray width-9044	AL-47
9A-tray width-9044P	AL-47
9A-tray width-9054	AL-47
9A-tray width-9054P	AL-47
9A-tray width-9064	AL-47
9A-tray width-9064P	AL-47
9A-tray width-9074	AL-47
9A-tray width-9074P	AL-47
9A-1004	AL-33
9A-1004-1/2	AL-33
9A-1005	AL-33
9A-1005-1/2	AL-33

continued on next page

Series 2, 3, 4, & 5 Aluminum Cable Ladder Accessories

Not all accessories for aluminum cable ladder are aluminum only.
Those finishes and part numbers will be listed in this section.

Catalog No.	Page
9A-1006	AL-33
9A-1006-1/2	AL-33
9A-1007	AL-33
9A-1007-1/2	AL-33
9A-1014	AL-33
9A-1015	AL-33
9A-1016	AL-33
9A-1017	AL-33
9A-1024	AL-33
9A-1025	AL-33
9A-1026	AL-33
9A-1027	AL-33
9A-1034	AL-33
9A-1034-12	AL-33
9A-1034-36	AL-33
9A-1035	AL-33
9A-1035-12	AL-33
9A-1035-36	AL-33
9A-1036	AL-33
9A-1036-12	AL-33
9A-1036-36	AL-33
9A-1037	AL-33
9A-1037-12	AL-33
9A-1037-36	AL-33
9A-1045	AL-33
9A-1046	AL-33
9A-1047	AL-33
9A-1054	AL-34
9A-1055	AL-34
9A-1056	AL-34
9A-1057	AL-34
9A-1060	AL-33
9A-1061	AL-33
9A-1062	AL-33
9A-1064-reduction	AL-34
9A-1065-reduction	AL-34
9A-1066-reduction	AL-34
9A-1067-reduction	AL-34
9A-1074-tray width	AL-34
9A-1075-tray width	AL-34
9A-1076-tray width	AL-34

Catalog No.	Page
9A-1077-tray width	AL-34
9A-1084-tray width	AL-34
9A-1085-tray width	AL-34
9A-1086-tray width	AL-34
9A-1087-tray width	AL-34
9A-1104-tray width	AL-35
9A-1104T-tray width	AL-35
9A-1205	AL-38
9A-1205NB	AL-38
9A-1224	AL-43
9A-1225	AL-43
9A-1226	AL-43
9A-1227	AL-43
9A-1240	AL-34
9A-2044	AL-34
9A-2045	AL-34
9A-2046	AL-34
9A-2047	AL-34
9A-2130	AL-37
9A-6006	AL-33
9A-6007	AL-33
9A-9012	AL-47
9G-1158 Series	AL-35
9G-1205	AL-38
9G-1205NB	AL-38
9G-1249	AL-39
9G-1249HD	AL-39
9G-5324	AL-37
9G-5325	AL-37
9G-5326	AL-37
9G-5327	AL-37
9G-5500-1/2	AL-41
9G-55xx-22SHA Series	AL-41
9GRN-55xx-22SHA Series	AL-41
9P-55xx-22SH Series	AL-41
9P-9043	AL-47
9P-9053	AL-47
9P-9063	AL-47
9P-9073	AL-47
9SS4-1241	AL-43
9SS4-1242	AL-43

Catalog No.	Page
9SS4-2351	AL-37
9SS4-2352	AL-37
9SS6-1205	AL-38
9SS6-1205NB	AL-38
9SS6-1241	AL-43
9SS6-1242	AL-43
9ZN-1150 Series	AL-35
9ZN-1155 Series	AL-35
9ZN-1204	AL-38
9ZN-1204NB	AL-38
9ZN-1205	AL-38
9ZN-1205NB	AL-38
9ZN-1208	AL-38
9ZN-1208NB	AL-38
9ZN-1241	AL-43
9ZN-1242	AL-43
9ZN-1249	AL-39
9ZN-1249HD	AL-39
9ZN-2351	AL-37
9ZN-2352	AL-37
9ZN-5200	AL-40
9ZN-5212	AL-40
9ZN-5224	AL-40
9ZN-5324	AL-37
9ZN-5325	AL-37
9ZN-5326	AL-37
9ZN-5327	AL-37
9ZN-5500-1/2	AL-41
9ZN-9002	AL-36
9ZN-9012	AL-47
9ZN-9112 Series	AL-47
9ZN-9113 Series	AL-47
ATR Series	AL-38
B212-1/4 or 3/8	AL-44
B297 Series	AL-42
B305-B308	AL-44
B312 Series	AL-44
B321 Series	AL-44
B355	AL-43
B409 Series	AL-42

continued on next page

Series 2, 3, 4, & 5 Aluminum Cable Ladder Accessories

Not all accessories for aluminum cable ladder are aluminum only. Those finishes and part numbers will be listed in this section.

Catalog No.	Page
B409UF-12	AL-42
B409UF-21	AL-42
B441-22	AL-43
B441-22A	AL-43
B494 Series	AL-42
B501 Series	AL-42
B655-3/8	AL-38
B655-1/2	AL-38
B700-Jx Series	AL-44
B750-Jx Series	AL-44
BP081SS	AL-37
BP110SS	AL-37
BP135SS	AL-37
BP175SS	AL-37
BP205SS	AL-37
BP250SS	AL-37
BP300SS	AL-37
BP325SS	AL-37
BP375SS	AL-37
BP425SS	AL-37
BP475SS	AL-37
SFHN 3/8"-16	AL-34
SNCB 3/8" x 3/4"	AL-34

Materials
A = Aluminum
G = Hot-Dipped Galvanized
GRN = Dura-Green Painted
P = Pre-Galvanized Steel
SS = Stainless Steel 304
SS4 = Stainless Steel 304
SS6 = Stainless Steel 316
ZN = Zinc Plated

Perforated & Solid Cable Tray Accessories

Catalog No.	Page
M6x16PHS*	PS-10
M6SFHN*	PS-10
PBE-025**-Width	PS-9
PBE-050**-Width	PS-9
PBE-075**-Width	PS-9
PBE-100**-Width	PS-9
PBS**-(1, 2, 3, 4, 5)	PS-8
PCCC025**-Width	PS-10
PCCC050**-Width	PS-10
PCCC075**-Width	PS-10
PCCC100**-Width	PS-10
PDO**-050	PS-10
PDO**-100	PS-10
PDO**-150	PS-10
PDO**-100	PS-10
PDO**-300	PS-10
PDO**-400	PS-10
PDO**-500	PS-10
PDO**-600	PS-10
PDO**-900	PS-10
PHAM025**	PS-8
PHAM050**	PS-8
PHAM075**	PS-8
PHAM100**	PS-8
PHD025**	PS-10
PHD050**	PS-10
PHD075**	PS-10
PHD100**	PS-10
PLR025**-Width	PS-9
PLR050**-Width	PS-9
PLR075**-Width	PS-9
PLR100**-Width	PS-9
PRR025**-Width	PS-9
PRR050**-Width	PS-9
PRR075**-Width	PS-9
PRR100**-Width	PS-9
PSP025**	PS-8
PSP050**	PS-8
PSP075**	PS-8
PSP100**	PS-8
PSR025**-Width	PS-9
PSR050**-Width	PS-9
PSR075**-Width	PS-9
PSR100**-Width	PS-9
PVA025**	PS-8
PVA050**	PS-8
PVA075**	PS-8
PVA100**	PS-8
PWCC025**-Width	PS-10
PWCC050**-Width	PS-10
PWCC075**-Width	PS-10
PWCC100**-Width	PS-10

Materials
* G = Hot-Dipped Galvanized
SS6 = Stainless Steel 316
N = Nylon
** Aluminum
P = Pre-Galvanized Steel
G = Hot-Dipped Galvanized
SS6 = Stainless Steel 316

Steel Cable Ladder Series 1 Accessories

Not all accessories for steel cable ladder are steel only. Those finishes and part numbers will be listed in this section.

Catalog No.	Page
Series 1 Cable Ladder Accessories	
72G-Length	LDS-8
72G-90HBFL	LDS-8
72G-(angle)VI(radius)	LDS-8
72G-(angle)VO(radius)	LDS-8
72P-Length	LDS-8
72P-90HBFL	LDS-8
72P-(angle)VI(radius)	LDS-8
72P-(angle)VO(radius)	LDS-8
737G-Length	LDS-8
737G-90HBFL	LDS-8
737G-(angle)VI(radius)	LDS-8
737G-(angle)VO(radius)	LDS-8
737P-Length	LDS-8
737P-90HBFL	LDS-8
737P-(angle)VI(radius)	LDS-8
737P-(angle)VO(radius)	LDS-8
747G-Length	LDS-8
747G-90HBFL	LDS-8
747G-(angle)VI(radius)	LDS-8
747G-(angle)VO(radius)	LDS-8
747P-Length	LDS-8
747P-90HBFL	LDS-8
747P-(angle)VI(radius)	LDS-8
747P-(angle)VO(radius)	LDS-8
99-9980-tray width	LDS-11
99-9982	LDS-8
99-N1	LDS-7
9A-2130	LDS-7
9G-1104T-tray width	LDS-8
9G-1158 Series	LDS-7
9G-2004-1/2	LDS-5
9G-2005-1/2	LDS-5
9G-2006-1/2	LDS-5
9G-2007-1/2	LDS-5
9G-4004	LDS-5
9G-4005	LDS-5
9G-4006	LDS-5
9G-4007	LDS-5
9G-4014	LDS-5
9G-4015	LDS-5
9G-4016	LDS-5
9G-4017	LDS-5
9G-7024	LDS-5
9G-8004	LDS-5
9G-8024	LDS-5
9G-8025	LDS-5
9G-8026	LDS-5
9G-8034	LDS-5
9G-8034-12	LDS-5
9G-8034-36	LDS-5
9G-8035	LDS-5
9G-8035-12	LDS-5
9G-8035-36	LDS-5
9G-8036	LDS-5
9G-8036-12	LDS-5
9G-8036-36	LDS-5
9G-8045	LDS-5
9G-8046	LDS-5
9G-8054	LDS-6
9G-8055	LDS-6
9G-8056	LDS-6
9G-8060	LDS-5
9G-8064-reduction	LDS-6
9G-8065-reduction	LDS-6
9G-8066-reduction	LDS-6
9G-8074-tray width	LDS-6
9G-8075-tray width	LDS-6
9G-8076-tray width	LDS-6
9G-8084-tray width	LDS-6
9G-8085-tray width	LDS-6
9G-8086-tray width	LDS-6
9G-9014	LDS-11
9G-9015	LDS-11
9G-9016	LDS-11
9G-9019	LDS-11
9G-tray width-9040	LDS-11
9G-9043	LDS-11
9G-tray width-9044	LDS-11
9G-9053	LDS-11
9G-tray width-9054	LDS-11
9G-9063	LDS-11
9G-tray width-9064	LDS-11
9G-9243	LDS-11
9P-1104T-tray width	LDS-8
9P-2004-1/2	LDS-5
9P-2005-1/2	LDS-5
9P-2006-1/2	LDS-5
9P-2007-1/2	LDS-5
9P-8054	LDS-6
9P-8055	LDS-6
9P-8056	LDS-6
9P-8064-reduction	LDS-6
9P-8065-reduction	LDS-6
9P-8066-reduction	LDS-6
9P-8074-tray width	LDS-6
9P-8075-tray width	LDS-6
9P-8076-tray width	LDS-6
9P-8084-tray width	LDS-6
9P-8085-tray width	LDS-6
9P-8086-tray width	LDS-6
9P-tray width-9040	LDS-11
9P-9043	LDS-11
9P-tray width-9044	LDS-11
9P-9053	LDS-11
9P-tray width-9054	LDS-11
9P-9063	LDS-11
9P-tray width-9064	LDS-11
9SS4-2351	LDS-7
9SS4-2352	LDS-7
9ZN-1113	LDS-8
9ZN-1204	LDS-7
9ZN-1204NB	LDS-7
9ZN-1208	LDS-7
9ZN-1208NB	LDS-7
9ZN-2351	LDS-7
9ZN-2352	LDS-7
9ZN-4004	LDS-5
9ZN-4005	LDS-5
9ZN-4006	LDS-5
9ZN-4007	LDS-5
9ZN-4014	LDS-5
9ZN-4015	LDS-5
9ZN-4016	LDS-5
9ZN-4017	LDS-5
9ZN-5324	LDS-8
9ZN-5325	LDS-8

continued on next page

Steel Cable Ladder Series 1 Accessories

Not all accessories for steel cable ladder are steel only. Those finishes and part numbers will be listed in this section.

Catalog No.	Page
9ZN-5326	LDS-8
9ZN-7024	LDS-5
9ZN-8004	LDS-5
9ZN-8024	LDS-5
9ZN-8025	LDS-5
9ZN-8026	LDS-5
9ZN-8034	LDS-5
9ZN-8034-12	LDS-5
9ZN-8034-36	LDS-5
9ZN-8035	LDS-5
9ZN-8035-12	LDS-5
9ZN-8035-36	LDS-5
9ZN-8036	LDS-5
9ZN-8036-12	LDS-5
9ZN-8036-36	LDS-5
9ZN-8045	LDS-5
9ZN-8046	LDS-5
9ZN-8060	LDS-5
9ZN-9014	LDS-10
9ZN-9015	LDS-10
9ZN-9016	LDS-10
9ZN-9019	LDS-10
9ZN-9243	LDS-10
ATR Series	LDS-7
B655 Series	LDS-7
RNCB 3/8"-16 x 3/4"	LDS-6
SFHN 3/8"-16	LDS-6

Materials
A = Aluminum
G = Hot-Dipped Galvanized
P = Pre-Galvanized Steel
SS4 = Stainless Steel 304
ZN = Zinc Plated

Catalog No.	Page

Slotted Steel Cable Ladder Accessories

Not all accessories for steel cable ladder are steel only. Those finishes and part numbers will be listed in this section.

Catalog No.	Page

Slotted Steel Cable Tray Accessories

99-9982	CL-10
99-N1	CL-8
9G-1204	CL-9
9G-1205	CL-9
9G-1208	CL-9
9SS-1204	CL-9
9SS-1205	CL-9
9SS-1208	CL-9
ATR M6	CL-8
ATR M8	CL-8
ATR M10	CL-8
ATR M12	CL-8
B655-M6	CL-8
B655-M8	CL-8
B655-M10	CL-8
B655-M12	CL-8
ELAS	CL-7
LBD125G-1000	CL-10
LBD125SS6-1000	CL-10
LBD150G-1000	CL-10
LBD150SS6-1000	CL-10
LBE125G150	CL-8
LBE125G300	CL-8
LBE125G450	CL-8
LBE125G600	CL-8
LBE125G750	CL-8
LBE125G900	CL-8
LBE125SS6150	CL-8
LBE125SS6300	CL-8
LBE125SS6450	CL-8
LBE125SS6600	CL-8
LBE125SS6750	CL-8
LBE125SS6900	CL-8
LBE150G150	CL-8
LBE150G300	CL-8

continued on next page

Slotted Steel Cable Ladder Accessories

Not all accessories for steel cable ladder are steel only.
Those finishes and part numbers will be listed in this section.

Catalog No.	Page
LBE150G450	CL-8
LBE150G600	CL-8
LBE150G750	CL-8
LBE150G900	CL-8
LBE150SS6150	CL-8
LBE150SS6300	CL-8
LBE150SS6450	CL-8
LBE150SS6600	CL-8
LBE150SS6750	CL-8
LBE150SS6900	CL-8
LCCSDMZ	CL-28
LCCSDSS6	CL-28
LCCSDRMZ	CL-28
LCCSDRSS6	CL-28
LCH125(tray width)G	CL-28
LCH125(tray width)SS6	CL-28
LCH150(tray width)G	CL-28
LCH150(tray width)SS6	CL-28
LCL125G	CL-28
LCL125SS6	CL-28
LCL150G	CL-28
LCL150SS6	CL-28
LDOG150150	CL-8
LDOG150300	CL-8
LDOG150450	CL-8
LDOG150600	CL-8
LDOG150750	CL-8
LDOG150900	CL-8
LDOSS6150150	CL-8
LDOSS6150300	CL-8
LDOSS6150450	CL-8
LDOSS6150600	CL-8
LDOSS6150750	CL-8
LDOSS6150900	CL-8
LES125G	CL-6
LES125SS6	CL-6
LES150G	CL-6
LES150SS6	CL-6
LHA125G	CL-6
LHA125SS6	CL-6
LHA150G	CL-6

Catalog No.	Page
LHA150SS6	CL-6
LHD121X	CL-9
LHD123X	CL-9
LHE125G	CL-7
LHE125SS6	CL-7
LHE150G	CL-7
LHE150SS6	CL-7
LID125G(angle)(radius)	CL-10
LID125SS6(angle)(radius)	CL-10
LID150G(angle)(radius)	CL-10
LID150SS6(angle)(radius)	CL-10
LOD125G(angle)(radius)	CL-10
LOD125SS6(angle)(radius)	CL-10
LOD150G(angle)(radius)	CL-10
LOD150SS6(angle)(radius)	CL-10
LRE125G	CL-6
LRE125SS6	CL-6
LRE150G	CL-6
LRE150SS6	CL-6
LRS125G	CL-6
LRS125SS6	CL-6
LRS150G	CL-6
LRS150SS6	CL-6
LSD125G-3000	CL-10
LSD125P-3000	CL-10
LSD150G-3000	CL-10
LSD150P-3000	CL-10
LSP125G	CL-6
LSP125SS6	CL-6
LSP150G	CL-6
LSP150SS6	CL-6
LSR125G-150	CL-7
LSR125G-300	CL-7
LSR125G-450	CL-7
LSR125G-600	CL-7
LSR125G-750	CL-7
LSR125SS6-150	CL-7
LSR125SS6-300	CL-7
LSR125SS6-450	CL-7
LSR125SS6-600	CL-7
LSR125SS6-750	CL-7

Catalog No.	Page
LSR150G-150	CL-7
LSR150G-300	CL-7
LSR150G-450	CL-7
LSR150G-600	CL-7
LSR150G-750	CL-7
LSR150SS6-150	CL-7
LSR150SS6-300	CL-7
LSR150SS6-450	CL-7
LSR150SS6-600	CL-7
LSR150SS6-750	CL-7
LTC125G	CL-8
LTC125SS6	CL-8
LTC150G	CL-8
LTC150SS6	CL-8
LVA125G	CL-6
LVA125SS6	CL-6
LVA150G	CL-6
LVA150SS6	CL-6
SNCB	CL-7
SFHN	CL-7

Materials

G = Hot-Dipped Galvanized

SS6 = Stainless Steel 316

MZ = Mechanical Galvanized

Fiberglass Cable Tray Accessories

Catalog No.	Page
M6x12.5STSSS6	GRP-6
M6SFHNSS6	GRP-6
PBE050(x)(width)	GRP-5
PBE100(x)(width)	GRP-5
PCH050SS6	GRP-6
PCH100SS6	GRP-6
PEP100(x)	GRP-5
PHAM050(x)	GRP-5
PHAM100(x)	GRP-5
PSD050(x)-Length	GRP-6
PSD100(x)-Length	GRP-6
PSP050(x)	GRP-5
PSP100(x)	GRP-5
PVA050(x)	GRP-5
PVA100(x)	GRP-5
PVC050SS6	GRP-6
PVC100SS6	GRP-6
PWCC050(x)(width)	GRP-20
PWCC100(x)(width)	GRP-20
TPDR	GRP-20

Materials
(x) = Insert
- F for Polyester Resin
- FZ for Zero Halogen Resin
- FD for Polyester Resin w/ Carbon Surface Veil
- FH for Zero Halogen Resin w/ Carbon Surface Veil

Fiberglass Cable Ladder Accessories

Catalog No.	Page
9F-2008	GRP-29
9F-2009	GRP-29
9F-2010	GRP-29
9F-2011	GRP-29
9F-2012	GRP-29
9F-2013	GRP-29
9F-2014	GRP-29
9F-2015	GRP-29
9F-2016	GRP-29
9F-2017	GRP-29
LBE075(x)(width)	GRP-28
LBE100(x)(width)	GRP-28
LBE150(x)(width)	GRP-28
LCF075(x)	GRP-43
LCF100(x)	GRP-43
LCF150(x)	GRP-43
LCR075(x)	GRP-43
LCR100(x)	GRP-43
LCR150(x)	GRP-43
LDO(x)	GRP-28
LES075(x)	GRP-27
LES100(x)	GRP-27
LES150(x)	GRP-27
LHA075(x)	GRP-27
LHA100(x)	GRP-27
LHA150(x)	GRP-27
LHC075(x)02C	GRP-28
LHC100(x)02C	GRP-28
LHC150(x)03C	GRP-28
LHC150(x)04C	GRP-28
LHC150(x)05C	GRP-28
LSD075(x)-3000	GRP-29
LSD100(x)-3000	GRP-29
LSD150(x)-3000	GRP-29
LSP075(x)	GRP-27
LSP100(x)	GRP-27
LSP150(x)	GRP-27
LVA075(x)	GRP-27
LVA100(x)	GRP-27
LVA150(x)	GRP-27
LVC075(x)02C	GRP-28
LVC100(x)02C	GRP-28
LVC150(x)03C	GRP-28
LVC150(x)04C	GRP-28
LVC150(x)05C	GRP-28
LZC075(x)02C	GRP-28
LZC100(x)02C	GRP-28
LZC150(x)03C	GRP-28
LZC150(x)04C	GRP-28
LZC150(x)05C	GRP-28
PWCC075(x)(width)	GRP-43
PWCC100(x)(width)	GRP-43
PWCC150(x)(width)	GRP-43
RSK-010	GRP-29
TPDR	GRP-43

Materials
(x) = Insert
- F for Polyester Resin
- FZ for Zero Halogen Resin
- FD for Polyester Resin w/ Carbon Surface Veil
- FH for Zero Halogen Resin w/ Carbon Surface Veil

Cable Cleats & Accessories

Catalog No.	Page
9SS6-CCB-A	CC-4
9SS6-CCB-B	CC-4
9SS6-CCB-C	CC-4
9SS6-CCS2832	CC-3
9SS6-CCS3034	CC-3
9SS6-CCS3236	CC-3
9SS6-CCS3438	CC-3
9SS6-CCS3640	CC-3
9SS6-CCS3842	CC-3
9SS6-CCS4044	CC-3
9SS6-CCS4246	CC-3
9SS6-CCS4448	CC-3
9SS6-CCS4650	CC-3
9SS6-CCS4852	CC-3
9SS6-CCS5054	CC-3
9SS6-CCS5256	CC-3
9SS6-CCS5458	CC-3
9SS6-CCS5660	CC-3
9SS6-CCS5862	CC-3
9SS6-CCS6064	CC-3
9SS6-CCS6266	CC-3
9SS6-CCS6468	CC-3
9SS6-CCS6670	CC-3
9SS6-CCS6872	CC-3
9SS6-CCS7074	CC-3
9SS6-CCS7276	CC-3
9SS6-CCS7478	CC-3
9SS6-CCS7680	CC-3
9SS6-CCS7682	CC-3
9SS6-CCS8084	CC-3
9SS6-CCS8286	CC-3
9SS6-CCS8488	CC-3
9SS6-CCS8690	CC-3
9SS6-CCS8892	CC-3
9SS6-CCS9094	CC-3
9SS6-CCS9296	CC-3
9SS6-CCS94104	CC-3
9SS6-CCS100112	CC-3
9SS6-CCS106118	CC-3
9SS6-CCS112124	CC-3
9SS6-CCS118130	CC-3
9SS6-CCS127150	CC-3
9SS6-CCS132144	CC-3
9SS6-CCS138150	CC-3

Catalog No.	Page
9SS6-CCT1323	CC-2
9SS6-CCT2125	CC-2
9SS6-CCT2329	CC-2
9SS6-CCT2531	CC-2
9SS6-CCT2733	CC-2
9SS6-CCT2935	CC-2
9SS6-CCT3238	CC-2
9SS6-CCT3541	CC-2
9SS6-CCT3844	CC-2
9SS6-CCT4248	CC-2
9SS6-CCT4551	CC-2
9SS6-CCT4753	CC-2
9SS6-CCT4955	CC-2
9SS6-CCT5157	CC-2
9SS6-CCT5359	CC-2
9SS6-CCT5561	CC-2
9SS6-CCT5763	CC-2
9SS6-CCT5965	CC-2
9SS6-CCT6167	CC-2
9SS6-CCT6369	CC-2
9SS6-CCT6571	CC-2
9SS6-CCT6773	CC-2
9SS6-CCT6975	CC-2
9SS6-CCT7177	CC-2
9SS6-CCT7379	CC-2
9SS6-CCT7581	CC-2
9SS6-CCT7783	CC-2
9SS6-CCT7985	CC-2
9SS6-CCT8187	CC-2
9SS6-CCT8389	CC-2
9SS6-CCT8692	CC-2
9SS6-CCT8896	CC-2
9SS6-CCT9199	CC-2
9SS6-CCT96103	CC-2
9SS6-CCT99107	CC-2
9SS6-CCT103111	CC-2
9SS6-CCT107115	CC-2
9SS6-CCT111119	CC-2
9SS6-CCT115123	CC-2
9SS6-CCT119128	CC-2

Strut Support Systems

Channels

Catalog No.	Page
B11	BF-11 & BF-12
B11SH	BF-11 & BF-12
B11	BF-11 & BF-12
B11SH	BF-11 & BF-12
B22	BF-13 & BF-14
B22SH	BF-13 & BF-14
B24	BF-13 & BF-14
B24SH	BF-13 & BF-14
B32	BF-15
B32SH	BF-15
B42	BF-16
B42SH	BF-16
B52	BF-17 & BF-18
B52SH	BF-17 & BF-18

Hardware

Catalog No.	Page
ATR Series	BF-22
BMS-6	BF-20
BMS-6M	BF-20
BMS-6S	BF-20
BMS-8	BF-20
BMS-8M	BF-20
BMS-8S	BF-20
BMS-10	BF-20
BMS-10M	BF-20
BMS-10S	BF-20
BMS-12	BF-20
BMS-12M	BF-20
BMS-12S	BF-20
FW Series	BF-22
HN Series	BF-22
HHCS Series	BF-22
NWM6	BF-21
NWM8	BF-21
NWM10	BF-21
NWM12	BF-21
SLNW6	BF-21
SLNW8	BF-21
SLNW10	BF-21
SLNW12	BF-21
SLWNM6	BF-21
SLWNM8	BF-21
SLWNM10	BF-21
SLWNM12	BF-21

Fittings

Catalog No.	Page
B101	BF-24
B102	BF-25
B103	BF-25
B104	BF-25
B107	BF-25
B129	BF-24
B133	BF-24
B140	BF-24
B141	BF-24
B143	BF-24
B200 Series	BF-24
B200-D Series	BF-24
B217P	BF-21
B230	BF-25
B279FL	BF-26
B281AFL	BF-26
B297 Series	BF-25
B341	BF-24
B409 Series	BF-25
B441-22	BF-26
B441-22A	BF-26
B825-22	BF-21
B825-52	BF-21

METRIC CONVERSION CHART

To Convert From	To	Multiply By
Angle		
degree	radian (rad)	0.01745329
radian (rad)	degree	57.29578
Area		
foot^2	square meter (m^2)	0.09290304
inch^2	square meter (m^2)	0.00064516
circular mil	square meter (m^2)	0.0000000005067075
sq. centimeter (cm^2)	square inch (in^2)	0.1550003
square meter (m^2)	foot^2	10.76391
square meter (m^2)	inch^2	1550.003
square meter (m^2)	circular mil	1973523000.0
Temperature		
degree Fahrenheit	degree Celsius	$t^{oC}=(t^{oF}-32)/1.8$
degree Celsius	degree Fahrenheit	$t^{oF}=1.8t^{oC}+32$
Force		
pounds-force (lbf)	newtons (N)	4.448222

To Convert From	To	Multiply By
Length		
foot (ft)	meter (m)	0.3048
inch (in)	meter (m)	0.0254
mil	meter (m)	0.0000254
inch (in)	micrometer (µm)	25400.00
meter (m)	foot (ft)	3.280840
meter (m)	inch (in)	39.37008
meter (m)	mil	39370.08
micrometer (µm)	inch (in)	0.00003937008
Volume		
foot^3	cubic meter (m^3)	0.02831685
inch^3	cubic meter (m^3)	0.00001638706
cubic centimeter (cm^2)	cubic inch (in^3)	0.06102374
cubic meter (m^3)	foot^3	35.31466
cubic meter (m^3)	inch^3	61023.76
gallon (U.S. liquid)	cubic meter (m^3)	0.003785412
Section Properties		
section modulus S (in^3)	S (m^3)	0.00001638706
moment of inertia I (in^4)	I (m^4)	0.0000004162314
modulus of elasticity E (psi)	E (Pa)	6894.757
section modulus S (m^3)	S (in^3)	61023.74
moment of inertia I (m^4)	I (in^4)	2402510.0
modulus of elasticity E (Pa)	E (psi)	0.0001450377

To Convert From	To	Multiply By
Bending Moment or Torque		
lbf • ft	newton meter (N•m)	1.355818
lbf • in	newton meter (N•m)	0.1129848
N•m	lbf • ft	0.7375621
N•m	lbf • in	8.850748
Mass		
ounce (avoirdupois)	kilogram (kg)	0.02834952
pound (avoirdupois)	kilogram (kg)	0.4535924
ton (short, 2000 lb)	kilogram (kg)	907.1847
ton (long, 2240 lb)	kilogram (kg)	1016.047
kilogram (kg)	ounce (avoirdupois)	35.27396
kilogram (kg)	pound (avoirdupois)	2.204622
kilogram (kg)	ton (short, 2000 lb)	0.001102311
kilogram (kg)	ton (long, 2240 lb)	0.0009842064
Mass Per Unit Length		
lb/ft	kilogram per meter (kg/m)	1.488164
lb/in	kilogram per meter (kg/m)	17.85797
kg/m	lb/ft	0.6719689
kg/m	lb/in	0.5599741
Mass Per Unit Volume		
lb/ft^3	kilogram per cubic meter (kg/m^3)	16.01846
lb/in^3	kilogram per cubic meter (kg/m^3)	27679.9
kg/m^3	lb/ft^3	0.06242797
kg/m^3	lb/in^3	0.0000361273
lbs/ft^3	lbs/in^3	1728.0
Mass Per Unit Area		
lb/ft^2	kilogram per square meter (kg/m^2)	4.882428
kg/m^2	pound per square foot (lb/ft^2)	0.2048161
Pressure or Stress		
lbf/in^2 (psi)	pascal (Pa)	6894.757
kip/in^2 (ksi)	pascal (Pa)	6894757.0
lbf/in^2 (psi)	megapascals (MPa)	0.006894757
pascal (Pa)	pound-force per square inch (psi)	0.0001450377
pascal (Pa)	kip per square inch (ksi)	0.0000001450377
megapascals (MPa)	lbf/in^2 (psi)	145.0377

Abbreviations

Defl. = Deflection
S.F. = Safety Factor
Ft. = Feet
Pre-galv. = Pre-galvanized Steel
K Factor = Deflection ÷ load in Lbs./Ft.
o.c. = On Center
PVC = Poly Vinyl Chloride
In. = Inch
psi = Pounds per Square Inch
wt./c = Weight pre 100 pieces

Metric Symbols

m = meter
cm = centimeter
mm = millimeter
µm = micrometer
kg = kilogram
N = newton
kN = kilonewton
Pa = pascal
MPa = megapascal

These options are in addition to the Standard Ladder Rungs, Ventilated Trough and Solid Trough type Cable Trays.

Ladder with Strut Rungs

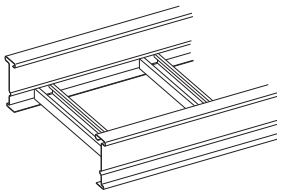

- B44 strut installed as rungs.
- Strut orientation may be channel opening up, channel opening down, or alternating - standard is alternating unless specified otherwise.
- Strut may be solid back or with slotted hole pattern "SH".
- The B-Line strut rung system offers additional cable clamping options relative to the chosen slot orientation.

Examples: 248G09B44-12-144
Strut rung on 9" centers with alternating slot orientation.
248G12B44SHDN-12-144
"SH" Strut rung on 12" centers with channel opening down (Note: replace "DN" with "UP" for channel opening up.)

Marine Rung (Available in Aluminum, HDGAF Steel and Stainless Steel)

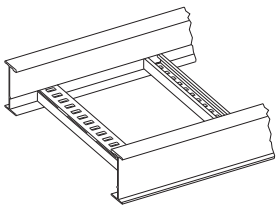

(Aluminum Shown)

- Designed for Series 2 or heavier systems.
- Special rung design to accommodate stainless steel banding of cables (U.S. Coast Guard requirement) with .25" x .69" slots.
- Has applications on land, vertical installation, any location where extra cable positioning/attachment is required.
- Rung strength - Aluminum supports 499 lbs. per rung on 36" wide system with a 1.5 safety factor. Steel supports 755 lbs. per rung on 36" wide system with a 1.5 safety factor.
- New design provides combination of strut fastening and marine rung fastening.

Example: 46A12MR-36-288 or 464G12MR-36-288

Special Rung Spacings: 4" & 18" rung spacing available upon request.

Non-Ventilated

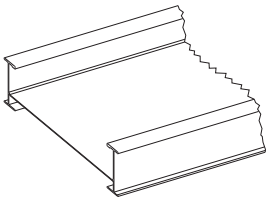

- Solid flat sheet welded into the Cable Tray above the rungs.
- Standard rung spacing is 12 inches.
- The flat sheet may be installed under the rungs, if preferred.
- The flat sheet may be installed over B54 rungs “slot down”.

Examples: 24ASB-36-144
Flat sheet bottom over standard rung on 12" spacing.
24ASBB54-36-144
Flat sheet bottom over B54 strut rung slot down on 12" spacing.

Notes

Notes

U.S. Customer Service Center is staffed Monday through Friday
from 7 a.m. to 5:00 p.m. Central Standard Time.
For more information, visit www.bline.com.

Eaton's B-Line Business
509 West Monroe Street
Highland, IL 62249
United States
Phone: (800) 851-7415
www.cooperbline.com/contactus

Eaton's B-Line Business
5925 McLaughlin Road
Mississauga, ON L5R 1B8
Canada
Phone: (800) 569-3660
www.cooperbline.com/contactca

Eaton's B-Line Business
Walrow Industrial Estate
Somerset, TA9 4AQ
United Kingdom
Phone: (44) 1278 772600
www.cooperbline.com/contactuk

Eaton's B-Line Business
PO Box 70160 - Al Khobar - 31952
Kingdom of Saudi Arabia
Phone: 00966 3 812 2236
www.cooperbline.com/contactme

Eaton's Cooper Singapore
N0. 2 Serangoon North Ave. 5
#06-01 Fu Yu Building, 554911
Singapore
Phone: +65 (0) 62974849

Eaton's Cooper Korea Co., Ltd.
13 Fl Vision Tower, 7072 Yeoksam-dong
Gangnam-gu
Seoul, 135-080
Korea
Phone: +44 (0) 1278 772600

Eaton
1000 Eaton Boulevard
Cleveland, OH 44122
United States
Eaton.com

Eaton's B-Line Business
509 West Monroe Street
Highland, IL 62249
Phone: 800-851-7415
Fax: 618-654-1917
www.cooperbline.com/me

© 2014 Eaton
All Rights Reserved

Printed in USA
Publication No. CTME-14
October 2014

Eaton is a registered trademark

All other trademarks are property
of their respective owners.

Powering Business Worldwide