ELLIOTT ELECTRIC SUPPLY
We Deliver...Lower Cost, Quality Products, & Personal Service
2310 N. Stallings Dr.
Nacogdoches, TX 75964-0
Phone: 9365697941
Fax: 9365604685



APX6R LED EXIT WHITE RED LTR AC ONLY (NO BTRY) UNI FACE

COOPER LIGHTING SOLUTIONS

Catalog Number	APX6R
Manufacturer	COOPER LIGHTING SOLUTIONS
Description	Thermoplastic Exit Sign, Universal Faces, Red Text Color, 120 V ac;277 V ac, 1.31 W @ 120 V;1.74 W @ 277 V, 1-5/8 in Depth, 11-5/8 in Length, 7-3/16 in Height, White, Battery (APX7) - Sealed Nickel Cadmium Battery, LED Bulb, 5 yr;7 yr (Battery) Warranty, Surface Mount, 2.4 lb
Weight per unit	2.4 (lbs/each)
Product Category	Exit Signs

Features

Fixture Type	Exit Light
Lamp Type	LED
Number Of Lamps	1
Voltage Rating	120 / 277V
Wattage	1.31W/1.74 W
Amperage Rating	0.07A/0.08 A
Battery	N/A
Lumens	N/A

Dimensions and Weight

Size	12.1 IN Length 2.5 IN Width 7.6 IN Height

Descriptions

Description	LED EXIT WHITE RED LTR AC ONLY (NO BTRY) UNI FACE
Long Description	AC Only, White Housing, LED Exit, Red Letters
Product Type	All Pro Ac Only Red Exit
Special Features	Long-life LED lamps provide uniform diffused illumination
Extra Long Description	CLS APX6R ALL PRO AC ONLY RED EXIT

Manufacturer Information

Brand	ALL-PRO EMERGENCY
	Cooper Lighting Solutions
GTIN	00080083566518
UPC	783363

Taxonomies, Classifications, and Categories

Category Description	Emergency & Exit Lighting
Type	LED Exit and Emergency

Packaging

Carton	1
Weight Per Each	2.4 (lbs/each)

ELLIOTT ELECTRIC SUPPLY
We Deliver...Lower Cost, Quality Products, & Personal Service
2310 N. Stallings Dr.
Nacogdoches, TX 75964-0
Phone: 9365697941
Fax: 9365604685

Uses, Certifications, and Standards

Mounting	Surface Mount

Sure-Lites

DESCRIPTION

The LED APX series is UL924 code compliant solution for indoor exit requirements. It is available as AC only (APX6) or self-powered (APX7) with a maintenance free nickel cadmium battery. The self-powered version will operate for a minimum of 90 minutes during a power outage. All models feature an LED source available in red or green, are field configurable for single or double face and are universal mount (ceiling, wall or end). The polycarbonate housing is available in white or black.

Catalog #		**Type**
Project		
Comments		**Date**
Prepared by		

SPECIFICATION FEATURES

Electrical
- Dual voltage input 120/277 VAC, 60Hz
- Solid-State voltage limited charger (APX7)
- Brownout circuit (APX7)
- Test switch / Power indicator light (APX7)

Housing Construction
- All components are injection molded, color stable, high impact thermoplastic material
- Available in a white or black finish
- Components are of snap-fit construction to facilitate under 5-minute installation
- Reinforcing ribs throughout to provide maximum strength connections
- All components including battery and electronics are located inside the exit housing
- Snap-out or snap-in chevron directional indicators have full 3/4" stroke
- Universal exits can be field configured as single face or double face
- Snap-fit canopy with mounting screws included with all exits
- Exit can be ceiling, wall, or end mounted
- Universal J-box mounting pattern
- Operating temperature range 10 °C to 40 °C

Battery
- Sealed nickel cadmium
- Maintenance free, long life
- Full recharge time: 24 hrs (max.)

Code Compliance
- UL 924 Listed
- UL Damp Location Listed
- Life Safety NFPA 101
- NEC/OSHA
- Most State and Local Codes
- operatig temperature range 10 °C to 40 °C
- California Energy Code compliant

Lamp Data
- AC LED: Long life LED lamps provide uniform diffused illumination
- DC: LED DC lamps (Brighter in emergency mode, APX7)

Warranty
- Five-year warranty
- Seven-year prorated battery warranty

T20 Certified to California Title 20 Appliance Database

LISTED NFPA OSHA

10°to 40°C operating temperature range

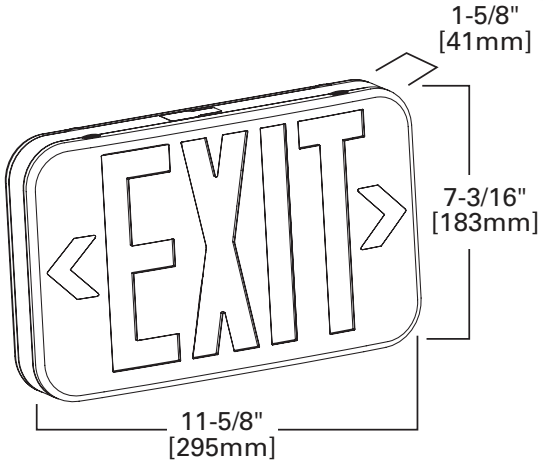





APX SERIES

THERMOPLASTIC EXIT
AC ONLY SELF POWERED
EMERGENCY
LED LAMPS
EXIT LIGHTING

ENERGY DATA

Maximum power consumption under all charge conditions:

Sealed Nickel Cadmium Battery LED Exits - Red	**Energy Data AC Only LED Exits - Red**
Input Power:	Input Power:
120V = .99W	120V = 1.31W
277V = 1.14W	277V = 1.74W
Input Current (Max.):	Input Current (Max.):
120V = .07A	120V = .07A
277V - .07A	277V - .08A
Power Factor:	Power Factor:
120V = >.12	120V = >.17
277V = >.06	277V = >.08

LED Exits - Green	**LED Exits - Green**
Input Power:	Input Power:
120V = .93W	120V = 1.33W
277V = 1.05W	277V = 1.76W
Input Current (Max.):	Input Current (Max.):
120V = .07A	120V = .07A
277V = .07A	277V = .07A
Power Factor:	Power Factor:
120V = >.11	120V = >.05
277V = >.05	277V = >.03

ORDERING INFORMATION

SAMPLE NUMBER: APX7RBK

Series	Battery	Face Options	Letter Colors	Housing Color	Remote Heads Powered
APX	6 = no battery (AC only) 7 = nickel cadmium battery	_ = Universal	**R** = Red **G** = Green	_ = White **BK** = Black	**APX6R,APX6G,APX6RBK,APX6GBK** **APX7R,APX7G,APX7RBK,APX7GBK**

TECHNICAL DATA

Lamps
Self-Powered LED versions of the All Pro Emergency Series Exits use energy efficient, long life LEDs to provide uniform diffuse illumination of the exit face. Both the red and green LEDs require no maintenance and consume a total of 2.0 watts. The low operating costs and zero maintenance requirement makes LED lamps the wisest choice for exit signs today. Emergency illumination is provided by LED lamps,

Housing Construction
Rugged, durable, injection molded thermoplastic materials are used throughout the All Pro Emergency Series Exits. All structural components are designed with reinforcing ribs to add additional rigidity and to maximize structural integrity. These materials are impact and scratch resistant, and they have been UV stabilized to resist discoloration due to age and ultraviolet radiation. All components are designed to be of snap-fit construction - no mechanical fasteners - to facilitate installation in under 5-minutes. Any components required for installation (wirenuts, wire leads, universal metal J-box bracket, etc.) are all included with each exit. The universal design of the All Pro Series Exits enables universal exits to be configured as single face or double face in the field. All Self-Powered All Pro Series Exits can be wall, ceiling, or end mounted; a rugged, snap-fit, low profile canopy with captive screws is included with every exit for ceiling and end mounting applications. The housings are available with a white or black finish.

Lens
Lenses are made from durable impact resistant thermoplastic. All exit faces are designed with full 3/4" stroke snap-out or snap-in chevron directional indicators to insure maximum visibility and compliance with the latest codes.

Solid-State Charger (APX7)
Supplied with a 120/277 VAC, voltage regulated solid-state charger. Immediately upon restoration of AC current after a power failure, the charger provides a high charge rate. The charge circuit reacts to the condition of the battery and regulates the charging process in order to maintain peak battery capacity and maximize battery life. Solid-state construction recharges the battery following a power failure in accordance with UL 924.

Brownout Circuit (APX7)
The brownout circuit on All Pro exits monitors the flow of AC current to the exit and activates the emergency lighting system when a predetermined reduction of AC power occurs. This dip in voltage will cause most ballasted fixtures to extinguish causing loss of normal lighting even though a total power failure has not occurred.

Test Switch/Power Indicator Light (APX7)
A test switch located on the bottom of the exit permits the activation of the emergency circuit for a complete operational systems check. The Power Indicator Light provides visual assurance that the AC power is on.

Sealed Nickel Cadmium Battery
All Pro Emergency sealed nickel cadmium batteries are maintenance free with a life expectancy of 10 years. The sealed rechargeable nickel cadmium battery offers high discharge rates and stable performance over a wide range of temperatures. The specially designed resealable vent automatically controls cell pressure, assuring safety and reliability. This battery is best suited for harsh ambient temperatures because the electrolyte is not active in the electrochemical process.

Warranty
The All Pro Series exit signs are backed by a five-year warranty.