Carlon®

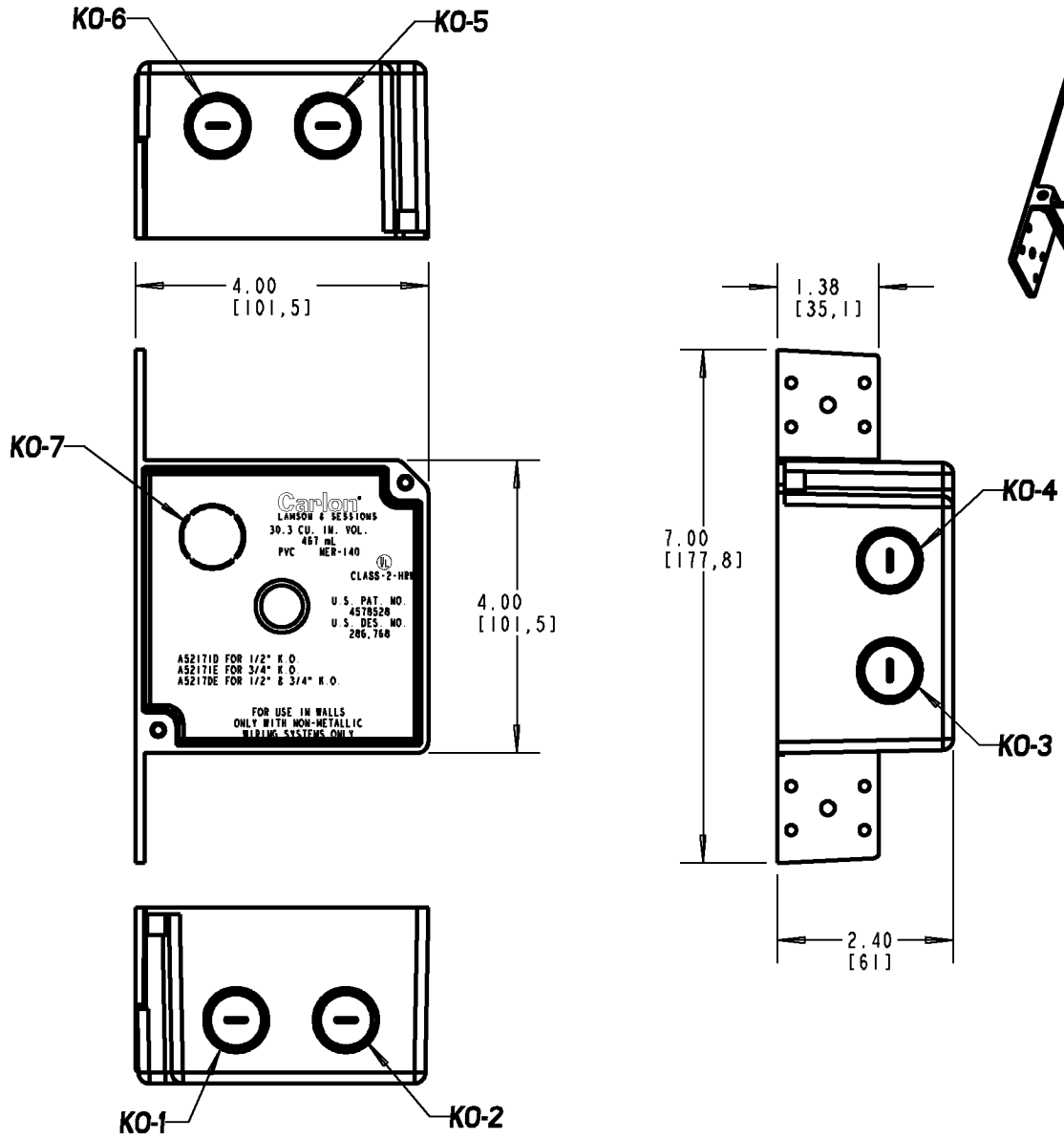

SIZE	PART NO.	KO-1	KO-2	KO-3	KO-4	KO-5	KO-6	KO-7
1/2"	A52171D	Ø.88 [22.2]	Ø.88 [22.2]	Ø.88 [22.2]	Ø.88 [22.2]	Ø.88 [22.2]	Ø.88 [22.2]	Ø.88 [22.2]
3/4"	A52171E	Ø1.11 [27.7]	Ø1.11 [27.7]	Ø1.11 [27.7]	Ø1.11 [27.7]	Ø1.11 [27.7]	Ø1.11 [27.7]	Ø.88 [22.2]
1/2" & 3/4"	A5217DE A5217DE-CAR	Ø.88 [22.2]	Ø1.11 [27.7]	Ø1.11 [27.7]	Ø.88 [22.2]	Ø.88 [22.2]	Ø1.11 [27.7]	Ø.88 [22.2]

GENERAL NOTES

1. ALL DIMENSIONS ARE FOR REFERENCE ONLY.
2. DIMENSIONS IN BRACKETS [ ] ARE IN METRIC UNITS.

REVISIONS

** SEE ERN (****) FOR APPROVAL SIGNATURES & RELEASE DATE. PROJECT NO: ****

Thomas&Betts
www.tnb.com

DESCRIPTION: 4" SQ. DEEP BOX W/KNOCKOUTS

ORIGINAL PROJECT NO / (ERN NO)	SHEET NO:	REV. NO:	DRAWING NO:
/ ( )	1 OF 1	A	WSD-AC04139

THIS DRAWING IS INTENDED FOR DESCRIPTIVE PURPOSES ONLY. AND THE RIGHT IS RESERVED TO DEVIATE FROM ANY OF THE DETAILS SHOWN HEREON.
©2008 Thomas & Betts - Proprietary, All Rights Reserved