WIRING DIAGRAMS

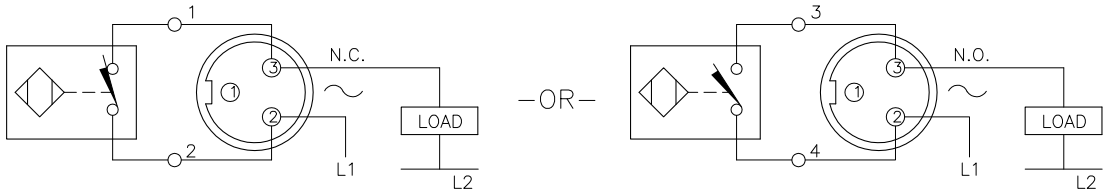

OUTPUT: FDZ30X2

OUTPUT: FDZ30X2

SHORT-CIRCUIT AND OVERLOAD PROTECTED

SPECIFICATIONS

OPERATING VOLTAGE	20-250 VAC/10-300 VDC
LINE FREQUENCY	40-60 Hz
DIFFERENTIAL TRAVEL (HYSTERESIS)	3-15% (5% TYPICAL)
VOLTAGE DROP ACROSS CONDUCTING SENSOR	≤ 6.0 V at 400mA
OUTPUT FUNCTION	CONNECTION PROGRAMMABLE NORMALLY OPEN OR NORMALLY CLOSED
SHORT-CIRCUIT PROTECTED	YES
TRIGGER CURRENT FOR OVERLOAD PROTECTION	≥ 440 mA
CONTINUOUS LOAD CURRENT	≤ 400 mA AC (MAX.)
CONTINUOUS LOAD CURRENT	≤ 300 mA DC (MAX.)
OFF-STATE (LEAKAGE) CURRENT	≤ 1.7 mA
MINIMUM LOAD CURRENT	≥ 3.0 mA
INRUSH CURRENT	≤ 4.0 A (≤ 20ms/5 Hz)
TIME DELAY BEFORE AVAILABILITY	≤ 80 ms
POWER-ON EFFECT PROTECTION	INCORPORATED
PROTECTION AGAINST TRANSIENTS	5 kV, 10ms, 10 kΩ
OPERATING TEMPERATURE	-25°C to +70°C (-13°F to +158°F)
ENCLOSURE	MEETS NEMA 1, 3, 4, 6, 13 AND IEC IP67
SHOCK	30 g, 11 ms
VIBRATION	55 Hz, 1 mm AMPLITUDE (IN ALL 3 PLANES)
LED FUNCTION	GREEN = POWER ON GREEN FLASHING = SHORT-CIRCUIT WARNING YELLOW = OUTPUT ENERGIZED
SENSING RANGE	40 mm = 1.575" (NOMINAL)
SWITCHING FREQUENCY	60 Hz
MIN. REPEAT ACCURACY	≤ 2%
EMBEDDABLE (SHIELDED)	NO

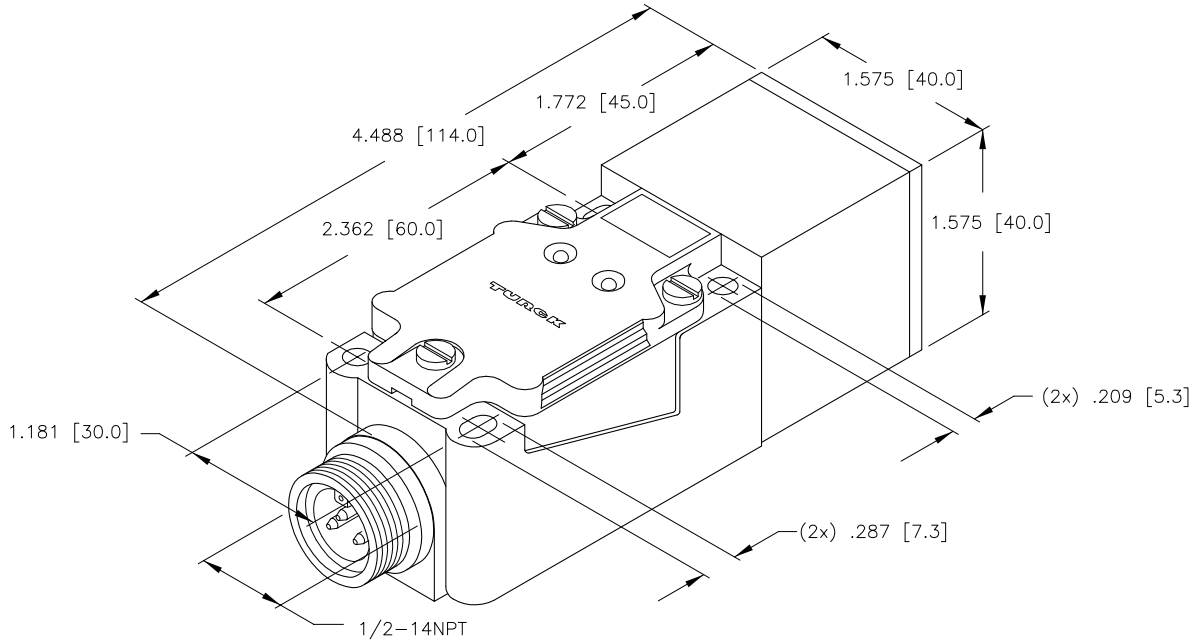

SOURCE DRAWING - FOR REFERENCE ONLY

NOTES:

1. SENSING HEAD TURNS TO ACCOMMODATE 9 DIFFERENT SENSING POSITIONS.

REV	DESCRIPTION	BY	DATE	ECO NO.
A	DRAWING RELEASE	RDS	03/17/05	

RELATED DOCUMENTS
1.
2.
3.
4.

3RD ANGLE PROJECTION

THIS DRAWING IS PROPERTY OF TURCK INC. USE OF THIS DOCUMENT WITHOUT WRITTEN PERMISSION IS PROHIBITED.

TURCK INC
High Technology Sensors and Automation Controls

3000 CAMPUS DRIVE
MINNEAPOLIS, MN 55441
1-800-544-7769
(763) 553-7300
(763) 553-0708 fax
turck.com

MATERIAL: PBT-GF30-VO PLASTIC

FINISH

ALL DIMENSIONS DISPLAYED ON THIS DRAWING ARE FOR REFERENCE ONLY

CONTACT TURCK FOR MORE INFORMATION

DRFT: RDS | DATE: 03/16/05
DSGN: EH | SCALE: NONE

UNIT OF MEASUREMENT
INCH [MILLIMETER]
DO NOT SCALE THIS DRAWING

DESCRIPTION: NI40U-CP40-FDZ30X2-B1131

IDENTIFICATION NO.: M4280890

REV: A

FILE: M4280890

SHEET 1 OF 1