ELLIOTT ELECTRIC SUPPLY
We Deliver...Lower Cost, Quality Products, & Personal Service
2310 N. Stallings Dr.
Nacogdoches, TX 75964-0
Phone: 9365697941
Fax: 9365604685

24FP4740C 40W 2X4 LED FLAT PANEL 40K

COOPER LIGHTING SOLUTIONS

Catalog Number	24FP4740C
Manufacturer	COOPER LIGHTING SOLUTIONS
Description	LED Panel, 120/277 V ac, 0.36 A @ 120 V;0.15 A @ 277 V, 40.3 W, Steel (Back Plate);Aluminum (Bezel) Material, 4000 K, 80, >60000 h Average Life, Dimmable, 4858 lm Brightness (Lumens), 23-3/4 in Length, 2 in Width, 47-3/4 in Height, 18.5 lb
Weight per unit	25.8 (lbs/each)
Product Category	Led Recessed Architectural & S

Descriptions

Description	40W 2X4 LED FLAT PANEL 40K
Long Description	2x4 LED recessed flat panel, 4700 Lumen, 4000K, 80 CRI, 0-10V continuous dimming driver
Product Type	2X4 Fpanel 4700L, 40K, 0-10V
Special Features	Ultra thin less than 2" height fits shallow plenums with room to spare
Extra Long Description	ECL 24FP4740C 2X4 FPANEL 4700L, 40K

Manufacturer Information

Brand	Cooper Lighting Solutions
	METALUX
GTIN	00080083833665
UPC	783363

Taxonomies, Classifications, and Categories

Category Description	LED ARCHITECTURAL & SPECIFICATION LIGHTING
Type	RECESSED

Packaging

Carton	1
Weight Per Each	25.8 (lbs/each)

Uses, Certifications, and Standards

Application	lighting
Standard	UL/cUL Listed - Damp Location

Metalux

DESCRIPTION

FPanel LED panel series provide premium performance and pleasing aesthetics. It is optimized for shallow plenum grid ceilings or surface mounting. Developed with Eaton's latest generation of solid state components and electronic driver technologies, these panels are ideal for new construction. Its refined visual optics and integrated grid retention clips provide the features needed for speed and installation flexibility. LED FPanels are an excellent lighting solution for commercial office spaces, schools, healthcare and retail merchandising areas.

Catalog #		**Type**
Project		
Comments		**Date**
Prepared by		

SPECIFICATION FEATURES

Construction/Mounting
Narrow aluminum bezel is tightly held to code gauge steel back plate to protect the LEDs and optical area. Corners are seamless to provide a refined finish and maximize the light emitting surface. Integral grid locking clips and separate suspension clips are included on the panel to ensure installation flexibility in ceiling systems and to meet code when additional retention is required. Junction box is constructed of code gage galvanized steel with an easy access hinged door for high voltage and low voltage wiring access and includes trade size knockouts. The stock luminaire is less than 2 inches in depth making it an ideal choice for shallow plenums and low ceilings. May also be surface mounted using the optional kit. Options available to meet IP5X ratings as well as factory installed flexible cable.

Controls
The FPanel is standard with a 0-10V continuous dimming driver which dims to 10% and works with most standard 0-10V control/dimmers. Combine with energy-saving products like wall dimmers, Room Controller, occupancy and daylight sensors, and lighting relay panels. Or, go wireless with optional field installed controls for either WaveLinx or LumaWatt Pro.

Electrical
Long-Life LED system coupled with electrical driver to deliver optimal performance. LED's available in 3500K, 4000K and 5000K with a minimum of 80 CRI and a 90 CRI option that is 3000K. Projected lumen maintenance based on TM21 is L73 > 60,000 hours. Electronic drivers are cULus recognized and available for 120-277V. Emergency battery pack options are available in 7 watts and 14 watts. These emergency battery packs can be factory installed as an option or field installed for remote mounting.

Optical Shielding
Light guide is constructed of acrylic with specialized features to optimize light extraction providing excellent efficiency. White frost lens with smooth pattern provides uniform illumination as well as scratch and impact resistance.

Compliance
Indoor luminaires are cULus listed for 25°C ambient environments, IC rated for direct insulation contact, RoHS compliant, damp location listed, and comply with IESNA LM-79 and LM-80 standards. NEMA 410 Compliant. DesignLights Consortium® Qualified and classified for DLC Standard, refer to www.designlights.org for details. Can be used for State of California Title 24 high efficacy luminaire.

Warranty
Five year warranty.

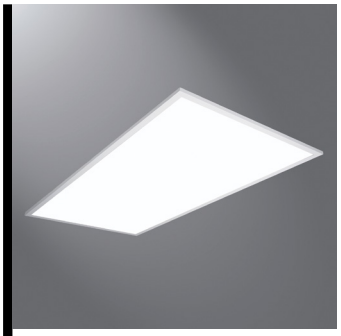

24FP
LED

2' X 4' LED PANEL

General LED Panel.
Recessed in Insulated
Ceilings or Surface Mount

Efficiency Standards
T24 California Title 24 Non-Residential Compliant

DIMENSIONS

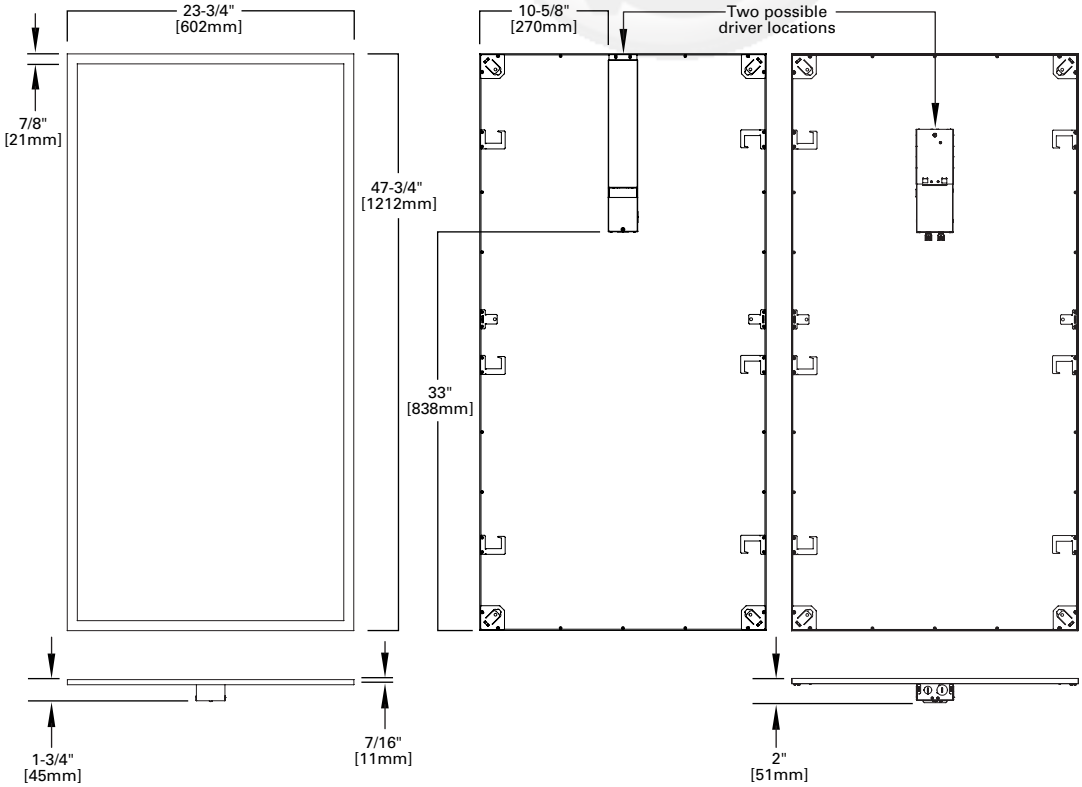

LOAD DATA (STOCK PRODUCT)

Thd	13%
Power Factor	0.96
Weight	18.5
Low Temp. Start	-20°C

EATON
Powering Business Worldwide

PHOTOMETRICS

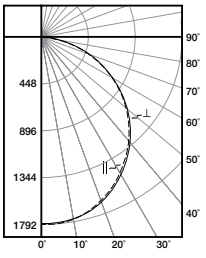

24FP4735C

Electronic Driver

Linear LED 3500K

Spacing criterion: (II) 1.24 x mounting height, (⊥) 1.26 x mounting height

Lumens: 5073

Input Watts: 40W

Efficacy: 126 lm/W

Test Report: 24FP4735C.IES

Candlepower

Angle	Along II	45°	Across ⊥
0	1785	1785	1785
5	1786	1774	1785
10	1761	1751	1764
15	1718	1711	1726
20	1657	1655	1670
25	1582	1582	1598
30	1495	1497	1516
35	1396	1400	1418
40	1284	1290	1311
45	1167	1173	1191
50	1040	1046	1060
55	906	912	926
60	768	772	784
65	626	628	637
70	481	483	491
75	340	340	348
80	206	206	212
85	92	90	94
90	0	0	0

Coefficients of Utilization

	Effective floor cavity reflectance																	
rc	80%				70%				50%			30%			10%			0%
rw	70	50	30	10	70	50	30	10	50	30	10	50	30	10	50	30	10	0
RCR																		
0	119	119	119	119	116	116	116	116	111	111	111	106	106	106	102	102	102	100
1	109	104	99	96	106	101	98	94	97	94	91	93	91	88	90	88	86	83
2	99	90	83	78	96	88	82	77	85	80	75	82	77	73	79	75	72	69
3	90	79	71	64	87	78	70	64	75	68	63	72	66	62	69	65	61	58
4	82	70	61	55	80	69	61	54	66	59	53	64	58	53	62	56	52	50
5	76	63	54	47	74	62	53	47	59	52	46	57	51	46	56	50	45	43
6	70	56	47	41	68	55	47	41	54	46	40	52	45	40	50	44	40	38
7	65	51	42	36	63	50	42	36	49	41	36	47	41	35	46	40	35	33
8	60	47	38	32	59	46	38	32	45	37	32	43	37	32	42	36	31	30
9	56	43	35	29	55	42	34	29	41	34	29	40	33	29	39	33	28	27
10	53	39	32	26	51	39	31	26	38	31	26	37	31	26	36	30	26	24

Zonal Lumen Summary

Zone	Lumens	% Fixture
0-30	1384	27.3
0-40	2261	44.6
0-60	3983	78.5
0-90	5073	100.0
0-180	5073	100.0

Luminance Data

Angle in Deg	Average 0-Deg cd/sm	Average 45-Deg cd/sm	Average 90-Deg cd/sm
45	2221	2232	2266
55	2125	2139	2172
65	1993	1999	2028
75	1768	1768	1809
85	1420	1389	1451

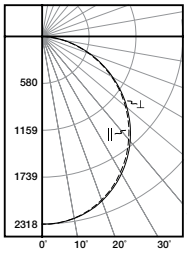

24FP6440C

Electronic Driver

Linear LED 4000K

Spacing criterion: (II) 1.25 x mounting height, (⊥) 1.26 x mounting height

Lumens: 6611.3

Input Watts: 59.4W

Efficacy: 111.3 lm/W

Test Report: 24FP6440C.IES

Candlepower

Angle	Along II	45°	Across ⊥
0	2316	2316	2316
5	2312	2309	2308
10	2279	2279	2282
15	2225	2229	2233
20	2150	2156	2163
25	2056	2062	2072
30	1939	1951	1963
35	1814	1824	1838
40	1668	1683	1698
45	1516	1530	1544
50	1351	1364	1376
55	1182	1191	1202
60	998	1007	1014
65	812	820	827
70	622	629	642
75	438	445	456
80	266	274	282
85	116	121	126
90	0	0	0

Coefficients of Utilization

	Effective floor cavity reflectance																	
rc	80%				70%				50%			30%			10%			0%
rw	70	50	30	10	70	50	30	10	50	30	10	50	30	10	50	30	10	0
RCR																		
0	119	119	119	119	116	116	116	116	111	111	111	106	106	106	102	102	102	100
1	109	104	99	95	106	101	97	94	97	94	91	93	91	88	90	88	86	83
2	99	90	83	78	96	88	82	77	85	79	75	82	77	73	78	75	71	69
3	90	79	71	64	87	78	70	64	75	68	63	72	66	62	69	65	60	58
4	82	70	61	54	80	69	60	54	66	59	53	64	58	53	62	56	52	50
5	76	63	54	47	73	61	53	47	59	52	46	57	51	46	56	50	45	43
6	70	56	47	41	68	55	47	41	54	46	40	52	45	40	50	44	40	37
7	65	51	42	36	63	50	42	36	49	41	36	47	40	35	46	40	35	33
8	60	47	38	32	59	46	38	32	45	37	32	43	37	32	42	36	31	30
9	56	43	35	29	55	42	34	29	41	34	29	40	33	29	39	33	28	27
10	53	39	32	26	51	39	31	26	38	31	26	37	30	26	36	30	26	24

Zonal Lumen Summary

Zone	Lumens	% Fixture
0-30	1798.9	27.2
0-40	2940.9	44.5
0-60	5186.4	78.4
0-90	6611.3	100.0
0-180	6611.3	100.0

Luminance Data

Angle in Deg	Average 0-Deg cd/sm	Average 45-Deg cd/sm	Average 90-Deg cd/sm
45	2885	2911	2938
55	2773	2794	2820
65	2585	2611	2633
75	2277	2313	2371
85	1791	1868	1945

ORDERING INFORMATION/PERFORMANCE

Catalog	UPC	CCT	CRI (Min)	Delivered Nominal Lumens	Watts	Efficacy (lm/W)	Input Current (A)	
							120V	277V
24FP4735C	080083833641	3500K	80	4990	40.4	124	.36	.15
24FP4740C	080083833665	4000K	80	4858	40.3	121		
24FP4750C	080083833689	5000K	80	5005	40.3	124		
24FP6435C	080083833702	3500K	80	6602	58.8	112	.51	.22
24FP6440C	080083833726	4000K	80	6611	59.4	111		
24FP6450C	080083833740	5000K	80	6746	59.4	114		
24FP3830C9[1]	080083833825	3000K	90	3886	40.3	96	.36	.15
24FP5830C9[1]	080083833849	3000K	90	5282	58.2	91	.51	.22

OPTIONS/ORDERING INFORMATION

IP5X=IP5X rating
Example catalog number=24FP4740C-IP5X

EL14W=EBPLED14W battery installed [2]
EL7W=EBPLED7W battery installed [2]
Example catalog number=24FP4740C-EL14W

A3/8-5D/18G=6' 3/8" flex with dimming leads installed
Example catalog number=24FP4740C-A3/8-5D/18G

ACCESSORIES/ORDERING INFORMATION

SURFACE MOUNT KIT [3]

Catalog	UPC
FPSURF24	080083802746

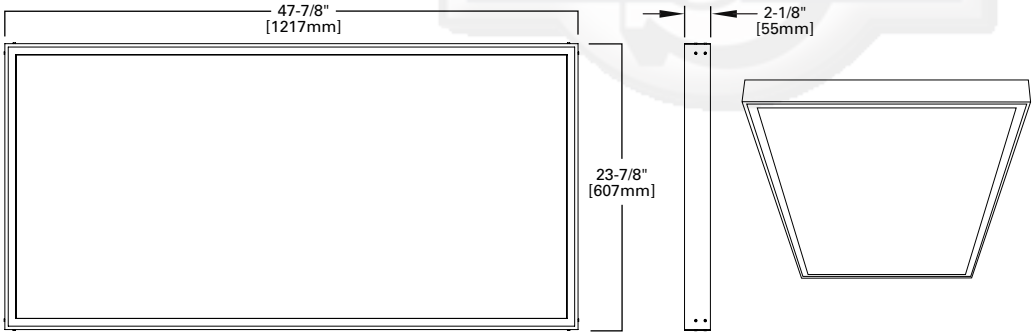

CEILING RETENTION [2]

Catalog	UPC
FPEQ	080083802685

Required by some local codes
Order one set for each fixture
(Four clips per kit)

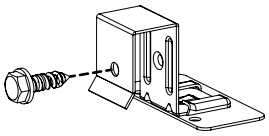

DRYWALL FRAME KIT

Catalog	UPC
DF-24W-U	662401232970

Notes:

[1] May have extended lead-times.
[2] Indicator/test switch to be installed separately. For approximate delivered lumens multiply the lumens per watt of the desired fixture by the wattage of the emergency battery pack (100 lm/W x 7=700 lumens).
[3] May not be used with EL7W or EL14W options

SHIPPING DATA

Size	Wt.	Pallet (30" x 56")
2' x 4'	22 lbs.	17

Powering Business Worldwide

Eaton
1121 Highway 74 South
Peachtree City, GA 30269
P: 770-486-4800
www.eaton.com/lighting

Specifications and dimensions subject to change without notice.