ELLIOTT ELECTRIC SUPPLY
We Deliver...Lower Cost, Quality Products, & Personal Service
2310 N. Stallings Dr.
Nacogdoches, TX 75964-0
Phone: 9365697941
Fax: 9365604685



1200 SW DOOR 15A 125/250VAC

PASS & SEYMOUR/LEGRAND

Catalog Number	1200
Manufacturer	PASS & SEYMOUR/LEGRAND
Description	Pressure Sensitive Door and Canopy Switch, Pushbutton Actuator, 120/250 V ac, 15 A, Wire Lead Connection, 1.516 in Overall Length, 1.547 in Overall Width, 4.031 in Overall Height, 30000 lm Operating Cycles, 1 Pole, Steel Housing Material, -30 °C Operating Temperature, +60 °C Operating Temperature, Wall Mount, 0.59 lb
Weight per unit	0.5860 (lbs/each)
Product Category	Hinge Switches & Accessories

Features

Contact Configuration	N-O
Contact Rating	120/250 VAC, 15 Amp
Load Rating	15 A @ 120/250 VAC
Load Type	Xenon, LED, Halogen, Fluorescent, Incandescent, CFL, Universal
Material	Thermoplastic
Mounting Type	Wall Box
Number Of Gangs	1
Number Of Switches	1.0
Poles	1
Switch Type	Canopy
Voltage	250 VAC, 120 VAC
Voltage Rating	120/250
Wall Plate Included	NO
Wattage	Electrical power is expressed in Amps and Volts.
Wire Size	#14 - #10 Awg
Action	SP
Actuator	Push Button
Amperage Rating	15
Indoor/Outdoor	Indoor
Media	Yes
Operating Cycles	30k.0
Throw Type	Single Throw

Material, Color, and Finish

Finish	Matte

Dimensions and Weight

Height	4.031
Width	1.547

ELLIOTT ELECTRIC SUPPLY
We Deliver...Lower Cost, Quality Products, & Personal Service
2310 N. Stallings Dr.
Nacogdoches, TX 75964-0
Phone: 9365697941
Fax: 9365604685

Descriptions

Description	SW DOOR 15A 125/250VAC
Features	Pressure Sensitive Switch Pressure Sensitive Door and Canopy Switch, 15 Amp 120 Vac, 15 Amp 250 Vac
Long Description	Pressure Sensitive Door and Canopy Switch, 15 Amp 120 Vac, 15 Amp 250 Vac
Product Type	SW Door 15A 125/250vac
Special Features	Light ON, door OPEN. Equipped with wire leads. Complete with metal box and plate. Only 14 oz. pressure actuates switch. Back box cold rolled steel. Plate is steel with bronze coating.
Extra Long Description	PAS 1200 SW DOOR 15A 125/250VAC

Manufacturer Information

Brand	LEGRAND-PASS & SEYMOUR
GTIN	00785007120004
UPC	785007

Taxonomies, Classifications, and Categories

Category Description	Residential Switches
Type	Switch, Tamper-Resistant

Trade Size

Amperage	15.0

Packaging

Carton	1
Package	50
Weight Per Each	0.5860 (lbs/each)

Uses, Certifications, and Standards

Application	Residential/Commercial
Mounting	WALL
Environmental Conditions	Flammability: UL94 V2
Standard	UL Listed

legrand®

Wiremold

1200 Series™
Pedestal Style Service Fittings

Single Service Fittings for Infloor Systems

Wiremold® 1200 Series™ Service Fittings are bell-cap style pedestal fittings used in single service power and communication applications. The split bell cap design protects the electrical or communication cabling exiting the fitting from damage. Multiple fittings are required for two or more services.

1200 Series Service Fittings are designed to be threaded directly into a 2" IPS [51mm] preset or afterset insert to activate Walkerduct® Underfloor Duct. It can also be applied as an afterset on Walkercell® Cellular Raceway. 1200 Service Fittings are suitable for new and renovation construction and is available in aluminum and brass finishes. All power fittings are UL listed to U.S. safety standards.



A 1200 Series Service Fitting installation on a carpeted floor.

FEATURES & BENEFITS

- **Split bell cap with grommet.** The cap splits into two pieces to surround a power cord and plug or communication cable. It helps to keep wiring connections from being disconnected while in service. The grommet provides a protected exit for wiring.
- **Brushed finish.** Brass or aluminum material is durable and maintains its good looks even after years of service.
- **Removable bell cap.** The fitting can be used without bell cap where a flush activation is desired.



The bell-cap, pedestal style components of 1200 Series Service Fittings.

1200 Series Service Fittings Ordering Information

Catalog No./Item	Description/Specifications
1204BF 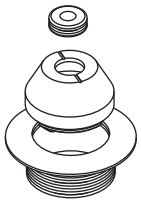	**Communication Service Fitting** – Brass finish communication fitting furnished with split bell cap and grommet. No device plate is included.
1204AL 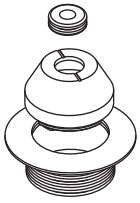	**Communication Service Fitting** – Aluminum finish communication fitting furnished with split bell cap and grommet. No device plate is included.
1223BF 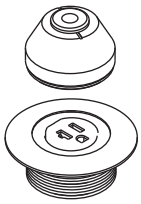	**Power Service Fitting** – Brass finish fitting includes housing, bell cap, grommet, and single U-slot, three-wire grounded, 20A, 125V receptacle.

Catalog No./Item	Description/Specifications
1223AL 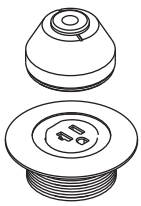	**Power Service Fitting** – Aluminum fitting includes housing, bell cap, grommet, and single U-slot, three-wire grounded, 20A, 125V receptacle.
1230AL 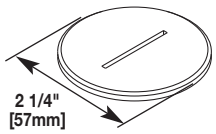	**Screw plug** – Aluminum screw plug to abandon service fitting. Screws into housing.
1230BF 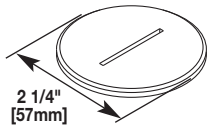	**Screw plug** – Brass screw plug to abandon service fitting. Screws into housing.

1200 Series Service Fittings Assembly Details

Traditional pedestal style fitting available for single service applications. 1204BF/1204AL shown for dimensional purposes.

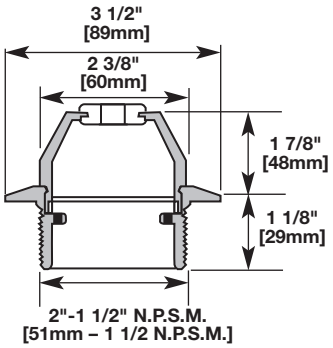

Side Profile

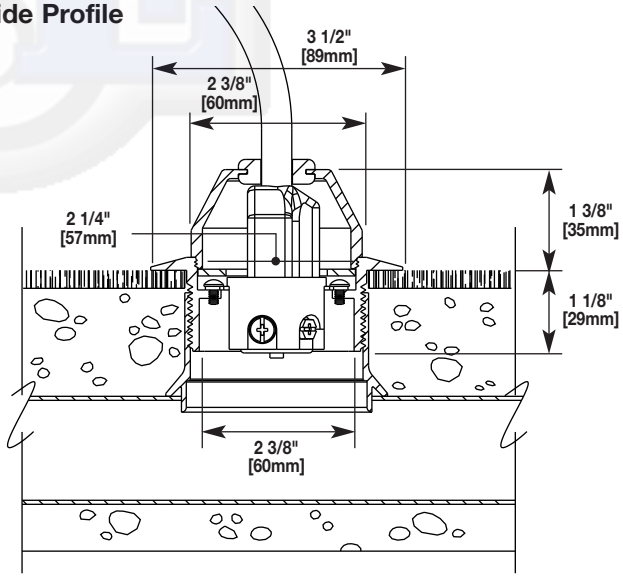

Wiremold

WIREMOLD
U.S. and International:
60 Woodlawn Street • West Hartford, CT 06110
1-800-621-0049 • FAX 860-232-2062 • Outside U.S. 860-233-6251
Canada:
570 Applewood Crescent • Vaughan, Ontario L4K 4B4
1-800-723-5175 • FAX 905-738-9721

© Copyright 2011 Legrand All Rights Reserved

ED666R5 – Updated March 2011 – For latest specs visit www.legrand.us/wiremold