Introduction

This latest edition of the GE product catalog has been updated to help you more easily select the GE lighting products that best meet your needs.

Technical data in this catalog (life, lumens, wattage, etc.) are nominal values, subject to manufacturer's tolerances. All technical data in this catalog is based on laboratory tests conducted under controlled conditions. Performance of individual lamps may vary. Because of frequent design improvements, the values listed may not be current ratings. The data and suggested applications should not be taken as representations or warranties as to the suitability of any product for a particular application. Technical bulletins may be issued from time to time if changes in ratings occur prior to the next catalog printing.

Technical Support

1-800-GE LAMPS
1-888-GE BALLAST
(1-888-432-2552)

For the most up-to-date, comprehensive product information, visit the GE Lighting website at
www.gelighting.com.

imagination at work

GE
Lighting

Leading the way to environmental excellence

Learn how these top 3 environmental impacts affect your business

Today, with so much environmental data in the market place, it's hard to differentiate which imperatives positively affect your business. For instance, a longer lamp life may be environmentally preferable compared to shorter life lamps.

GE is focused on today's most pressing environmental challenges, such as energy efficiency, longer life products and lamp recycling.

Energy Efficiency

Increasing the energy efficiency of the lighting system has a large effect on reducing the overall environmental impact and reduces energy bills.

Reduction of greenhouse gas emissions and energy use is important to business. GE offers you energy efficient systems to reduce your energy consumption and subsequently your GHG emissions.

To learn how to reduce energy costs by using GE products, go to **www.gelighting.com/environmental**

Long Life

Increasing lamp life and therefore reducing the number of lamps made, transported and recycled, also has a large effect on reducing environmental impact.

To view GE's large range of long life and energy efficient products, go to **www.gelighting.com** and click on "Products."

Recycling

GE recommends recycling fluorescent lamps at the end of life. Recycling recovers lamp materials, including mercury, for reuse.

To learn more about GE's recycling resources, go to **www.gelighting.com/environmental**

imagination at work

Ballasts

Ecomagination℠ is GE's commitment to create products that help our customers improve their environmental and operating performance. GE's UltraStart® T5 and T8 programmed start and GE UltraMax® Instant Start ballasts are among the highest energy-efficient ballasts available and contribute to significant reductions in energy consumption and the curbing of greenhouse gas emissions.

Conformance Directive

The restriction of Hazardous Substances (RoHS) is a European directive that restricts six hazardous materials in consumer products:

- Lead
- Mercury
- Cadmium
- Hexavalent chromium
- PBB flame retardants
- PBDE flame retardants

GE electronic ballast options meet the material restriction requirements of RoHS relating to those substances.

UltraMax® Professional Series

Introducing our premium, highest efficiency Instant Start ballasts. The P series is comprised of new micro cans that are the smallest in the industry and allow for lightweight retrofits and compact design. The new P series will effectively remote start energy efficient lamps up to 18 feet and have improved UL Type CC anti-arcing protection and double the surge protection for the high ballast factor category.

UltraStart® Electronic Ballast

UltraStart® ballasts are a family of high-efficiency GE Program Start (see page 10-2) electronic linear fluorescent ballasts designed to optimize GE's T8 and T5 Ultra lamps in frequently switched applications. Instant Start ballasts provide approximately 10,000 starts before 50% of lamp failure. UltraStart® provides greater than 100,000 starts. UltraStart® have the equivalent energy savings and convenience of instant start ballasts but with the long lamp life of a programmed start ballast. UltraStart® T8 L, N and H ballasts exceed 90% efficiency and the NEMA Premium® ballast program minimum efficiency requirements.

UltraMax® General Series

Offering more than 90 percent energy efficiency, the UltraMax® G series electronic ballast is designed for all-purpose, long-burn operations. Focusing on the needs of our customers, we've constructed these high-efficiency ballasts to offer cutting-edge technologies for low temperature starting and anti-striation control. With an ambient temperature rating of 104°F, the UltraMax® G series is ideal for general applications.

Introduction

UltraMax® T8 Electronic Ballast

UltraStart® T8 Electronic Ballast

Compact Fluorescent Lamp (CFL)

CFLs are single-ended T4 and T5 lamps that are bent to form a compact shape. Screw-in CFLs have an integral ballast with a screw base for easy replacement of incandescent lamps. GE offers multi-voltage, multi-lamp and multi-entry ballasts for a wide range of CFL plug-in lamps. Multivolt ProLine® CFL ballasts are designed for plug-in lamps so that a ballast will survive over the useful life of approximately 3-to-4 lamp lives.

Multivolt ProLine® CFL Ballast

Electromagnetic Ballast (Magnetic Ballast)

Primarily used for T12 lamps. These ballasts operate lamps at a less efficient 60Hz and typically have efficiencies of 70-80%. Most ballasts consist of a core and coil transformer assembly. Today, magnetic ballasts for 4 foot and 8 foot lamps are typically used only for replacement purposes and are restricted by EPACT to be sold, even in replacement applications, starting in 2009.

Sign Ballast (Magnetic Ballast)

Designed to operate T12 HO Lamps at 120 volts in cold and damp conditions in sign cabinets.

Sign Ballast

GE eHID, Electronic High Intensity Discharge Ballast (eHID)

Electronic HID significantly improves the performance of HID lighting. GE's UltraMax® eHID ballast operates pulse start and ceramic metal halide lamps.

GE High Intensity Discharge Ballast (HID)

HID magnetic ballasts consist of robust core and coil designs that meet or exceed minimum ANSI requirements. These ballasts are typically sold as distributor replacement kits which are pre-wired with a capacitor, ignitor (if applicable) and all necessary mounting hardware and instructions. Each wattage is typically offered in quad (MLT-120/208/240/277 volt), 5-tap (ML5-120/208/240/277/480 volt) or 480 volt (48T) options.

HID Electromagnetic Ballast Kit

UltraMax® eHID Ballast

GE Lighting & Electrical Institute

- World renowned training and education center at historic Nela Park in Cleveland, Ohio
- Impressive full-scale lighting demonstrations plus comprehensive electrical distribution solution center
- Variety of scheduled courses offered throughout the year, taught by experienced industry professionals

Call **1-800-255-1200**
or visit **www.gelighting.com/institute**

E-tools from the Institute:

- Live webcasts to sharpen your product and application knowledge
- Value*Light – GE's award-winning cost of light analysis program
- The Lighting Toolkit – a collection of seven simple estimating tools including a Simple Energy Calculator, Lighting Layout Estimator, and the Watts Per Square Foot Estimator
- The Lighting Assistant – a set of over 30 user-friendly tools and additional resources
- Light Beams – a comprehensive beam rendering and design tool for GE's PAR, R, MR and other directional lamps
- Plus training on online lighting layout tools and audit tools.

Learning Central...

the GE portal for all of your training and education needs!

Use Learning Central to register for Institute courses, enroll in online courses, schedule a customized onsite conference, track your progress, and more!

Visit **www.gelearningcentral.com**

Notes

Quick reference lamp to ballast selection guide

Lamp Type	Voltage	Fluorescent Ballast Type	Ballast Product Code	Ballast Description	Fluorescent Ballast Long Description
Fluorescent Lamps					
CFQ13W/2P	120	Preheat	87533	GEM1CF13PH120	1- CFT/Q13W/GX23 Pre Heat 120 (4111H2P)
CFQ13W/4P	120-277	Programmed start	63089	GEC213-MVPS-3W	2 or 1- CFQ13WG24q 120-277V ProLine® PS 3-Way Kit
	120-277	Programmed start	63091	GEC213-MVPS-BES	2 or 1- CFQ13WG24q Bottom Exit with Studs 120-277V ProLine® PS
	120-277	Programmed start	63092	GEC213-MVPS-SE	2 or 1- CFQ13WG24q Side Exit 120-277V ProLine® PS
CFQ18W/4P	120-277	Programmed start	63089	GEC213-MVPS-3W	2 or 1- CFQ13WG24q 120-277V ProLine® PS 3-Way Kit
	120-277	Programmed start	63091	GEC213-MVPS-BES	2 or 1- CFQ13WG24q Bottom Exit with Studs 120-277V ProLine® PS
	120-277	Programmed start	63092	GEC213-MVPS-SE	2 or 1- CFQ13WG24q Side Exit 120-277V ProLine® PS
	120-277	Programmed start	63093	GEC218-MVPS-3W	2 or 1- CFQ18WG24q 120-277V ProLine® PS 3 Way Kit
	120-277	Programmed start	63094	GEC218-MVPS-BES	2 or 1- CFQ18WG24q Bottom Exit with Studs 120-277V ProLine® PS
	120-277	Programmed start	63096	GEC218-MVPS-SE	2 or 1- CFQ18WG24q Side Exit 120-277V ProLine® PS
CFQ26W/4P	120-277	Programmed start	63093	GEC218-MVPS-3W	2 or 1- CFQ18WG24q 120-277V ProLine® PS 3 Way Kit
	120-277	Programmed start	63094	GEC218-MVPS-BES	2 or 1- CFQ18WG24q Bottom Exit with Studs 120-277V ProLine® PS
	120-277	Programmed start	63096	GEC218-MVPS-SE	2 or 1- CFQ18WG24q Side Exit 120-277V ProLine® PS
	120-277	Programmed start	63097	GEC226-MVPS-3W	2-CFQ26W FT24 or 1-42W CFTR32 3 Way Mounting Kit 120-277V ProLine® PS
	120-277	Programmed start	63101	GEC226-MVPS-BES	2-CFQ26W FT24 or 1-42W CFTR32 Bottom Exit w Studs 120-277V ProLine® PS
	120-277	Programmed start	63099	GEC226-MVPS-SE	2-CFQ26W FT24 or 1-42W CFTR32 Side Exit 120-277V ProLine® PS
CFS10W/4P	120-277	Programmed start	63089	GEC213-MVPS-3W	2 or 1- CFQ13WG24q 120-277V ProLine® PS 3-Way Kit
	120-277	Programmed start	63091	GEC213-MVPS-BES	2 or 1- CFQ13WG24q Bottom Exit with Studs 120-277V ProLine® PS
	120-277	Programmed start	63092	GEC213-MVPS-SE	2 or 1- CFQ13WG24q Side Exit 120-277V ProLine® PS
CFS16W/4P	120-277	Programmed start	63089	GEC213-MVPS-3W	2 or 1- CFQ13WG24q 120-277V ProLine® PS 3-Way Kit
	120-277	Programmed start	63091	GEC213-MVPS-BES	2 or 1- CFQ13WG24q Bottom Exit with Studs 120-277V ProLine® PS
	120-277	Programmed start	63092	GEC213-MVPS-SE	2 or 1- CFQ13WG24q Side Exit 120-277V ProLine® PS
	120-277	Programmed start	63093	GEC218-MVPS-3W	2 or 1- CFQ18WG24q 120-277V ProLine® PS 3 Way Kit
	120-277	Programmed start	63094	GEC218-MVPS-BES	2 or 1- CFQ18WG24q Bottom Exit with Studs 120-277V ProLine® PS
	120-277	Programmed start	63096	GEC218-MVPS-SE	2 or 1- CFQ18WG24q Side Exit 120-277V ProLine® PS
CFS21W/4P	120-277	Programmed start	63093	GEC218-MVPS-3W	2 or 1- CFQ18WG24q 120-277V ProLine® PS 3 Way Kit
	120-277	Programmed start	63094	GEC218-MVPS-BES	2 or 1- CFQ18WG24q Bottom Exit with Studs 120-277V ProLine® PS
	120-277	Programmed start	63096	GEC218-MVPS-SE	2 or 1- CFQ18WG24q Side Exit 120-277V ProLine® PS
	120-277	Programmed start	63097	GEC226-MVPS-3W	2-CFQ26W FT24 or 1-42W CFTR32 3 Way Mounting Kit 120-277V ProLine® PS
	120-277	Programmed start	63094	GEC226-MVPS-BES	2-CFQ26W FT24 or 1-42W CFTR32 Bottom Exit w Studs 120-277V ProLine® PS
	120-277	Programmed start	63099	GEC226-MVPS-SE	2-CFQ26W FT24 or 1-42W CFTR32 Side Exit 120-277V ProLine® PS
CFS28W/4P	120-277	Programmed start	63093	GEC218-MVPS-3W	2 or 1- CFQ18WG24q 120-277V ProLine® PS 3 Way Kit
	120-277	Programmed start	63094	GEC218-MVPS-BES	2 or 1- CFQ18WG24q Bottom Exit with Studs 120-277V ProLine® PS
	120-277	Programmed start	63096	GEC218-MVPS-SE	2 or 1- CFQ18WG24q Side Exit 120-277V ProLine® PS
CFT13W/2P	120	Preheat	87533	GEM1CF13PH120	1- CFT/Q13W/GX23 Pre Heat 120 (4111H2P)
CFTR13W/4P	120-277	Programmed start	63089	GEC213-MVPS-3W	2 or 1- CFQ13WG24q 120-277V ProLine® PS 3-Way Kit
	120-277	Programmed start	63091	GEC213-MVPS-BES	2 or 1- CFQ13WG24q Bottom Exit with Studs 120-277V ProLine® PS
	120-277	Programmed start	63092	GEC213-MVPS-SE	2 or 1- CFQ13WG24q Side Exit 120-277V ProLine® PS
CFTR18W/4P	120-277	Programmed start	63089	GEC213-MVPS-3W	2 or 1- CFQ13WG24q 120-277V ProLine® PS 3-Way Kit
	120-277	Programmed start	63091	GEC213-MVPS-BES	2 or 1- CFQ13WG24q Bottom Exit with Studs 120-277V ProLine® PS
	120-277	Programmed start	63092	GEC213-MVPS-SE	2 or 1- CFQ13WG24q Side Exit 120-277V ProLine® PS
	120-277	Programmed start	63093	GEC218-MVPS-3W	2 or 1- CFQ18WG24q 120-277V ProLine® PS 3 Way Kit
	120-277	Programmed start	63094	GEC218-MVPS-BES	2 or 1- CFQ18WG24q Bottom Exit with Studs 120-277V ProLine® PS
	120-277	Programmed start	63096	GEC218-MVPS-SE	2 or 1- CFQ18WG24q Side Exit 120-277V ProLine® PS
CFTR26W/4P	120-277	Programmed start	63093	GEC218-MVPS-3W	2 or 1- CFQ18WG24q 120-277V ProLine® PS 3 Way Kit
	120-277	Programmed start	63094	GEC218-MVPS-BES	2 or 1- CFQ18WG24q Bottom Exit with Studs 120-277V ProLine® PS
	120-277	Programmed start	63096	GEC218-MVPS-SE	2 or 1- CFQ18WG24q Side Exit 120-277V ProLine® PS
	120-277	Programmed start	63097	GEC226-MVPS-3W	2-CFQ26W FT24 or 1-42W CFTR32 3 Way Mounting Kit 120-277V ProLine® PS
	120-277	Programmed start	63094	GEC226-MVPS-BES	2-CFQ26W FT24 or 1-42W CFTR32 Bottom Exit w Studs 120-277V ProLine® PS
	120-277	Programmed start	63099	GEC226-MVPS-SE	2-CFQ26W FT24 or 1-42W CFTR32 Side Exit 120-277V ProLine® PS
CFTR32W/4P	120-277	Programmed start	63097	GEC226-MVPS-3W	2-CFQ26W FT24 or 1-42W CFTR32 3 Way Mounting Kit 120-277V ProLine® PS
	120-277	Programmed start	63094	GEC226-MVPS-BES	2-CFQ26W FT24 or 1-42W CFTR32 Bottom Exit w Studs 120-277V ProLine® PS
	120-277	Programmed start	63099	GEC226-MVPS-SE	2-CFQ26W FT24 or 1-42W CFTR32 Side Exit 120-277V ProLine® PS
CFTR42W/4P	120-277	Programmed start	63097	GEC226-MVPS-3W	2-CFQ26W FT24 or 1-42W CFTR32 3 Way Mounting Kit 120-277V ProLine® PS
	120-277	Programmed start	63094	GEC226-MVPS-BES	2-CFQ26W FT24 or 1-42W CFTR32 Bottom Exit w Studs 120-277V ProLine® PS
	120-277	Programmed start	63099	GEC226-MVPS-SE	2-CFQ26W FT24 or 1-42W CFTR32 Side Exit 120-277V ProLine® PS
F12T9	120	Rapid start	97498	GE240RS120	2 F40 or F34T12 Rapid Start 120V "N" BF ProLine® T12
F14T5/HE	120-277	Programmed start	68993	GE228MVPS-MC	2- F28T5 PRS UNV 50/60 Hz
	120-277	Programmed start	68993	GE228MVPS-MC	2 or 1 - F14-F35HE 120 to 277 UltraStart® PS Normal Light .95 BF A Can
	120-277	Programmed start	68994	GE228MVPS-H-MC	2 or 1 - F14-F35HE 120 to 277 UltraStart® PS High Light 1.15 BF A Can
F14T5/WM	120-277	Programmed start	68993	GE228MVPS-MC	2 or 1 - F14-F35HE 120 to 277 UltraStart® PS Normal Light .95 BF A Can
	120-277	Programmed start	68994	GE228MVPS-H-MC	2 or 1 - F14-F35HE 120 to 277 UltraStart® PS High Light 1.15 BF A Can
	120	Instant start	97782	GE232-120-RES	2 or 1- F32T8 120V Normal Light BF Energy Star Resi Grade Electronic Ballast
	120	Instant start	23673	GE-332-120-N	3 or 2- F32T8 120V "N".87 BF
	120	Instant start	97783	GE432-120-RES	3 or 4- F32T8 120V Normal Light BF Energy Star Resi Grade Electronic Ballast
	347	Instant start	74101	GE132MAX-G-N-347	1- F32T8 347V "N" .87 BF UltraMax®
	347	Instant start	74109	GE232MAXP347-H	2 or 1- F32T8 347V "H" 1.18 BF UltraMax®
F17T8	347	Instant start	74096	GE232MAXP347-L	2 or 1- F32T8 347V "L" .77 BF UltraMax®
	347	Instant start	74093	GE232MAXP347-N	2 or 1- F32T8 347V "N" .87 BF UltraMax®
	347	Instant start	74103	GE232MAX-G-N-347	2 or 1- F32T8 347V "N" .87 BF UltraMax®

See page E-1 for warranty information.

Quick reference lamp to ballast selection guide (cont.)

Lamp Type	Voltage	Fluorescent Ballast Type	Ballast Product Code	Ballast Description	Fluorescent Ballast Long Description
Fluorescent Lamps (continued)					
F17T8 (cont)	347	Instant start	74111	GE332MAXP347-H	3 - F32T8 347V "H" 1.18 BF UltraMax®
	347	Instant start	74097	GE332MAXP347-L	3 or 2- F32T8 347V "L" .77 BF UltraMax®
	347	Instant start	74094	GE332MAXP347-N	3 or 2- F32T8 347V "N" .87 BF UltraMax®
	347	Instant start	74105	GE332MAX-G-N-347	3 or 2- F32T8 347V "N" .87 BF UltraMax®
	347	Instant start	74113	GE432MAXP347-H	4 - F32T8 347V "H" 1.18 BF UltraMax®
	347	Instant start	74098	GE432MAXP347-L	4 or 3- F32T8 347V "L" .77 BF UltraMax®
	347	Instant start	74095	GE432MAXP347-N	4 or 3- F32T8 347V "N" .87 BF UltraMax®
	347	Instant start	74107	GE432MAX-G-N-347	4 or 3- F32T8 347V "N" .87 BF UltraMax®
	120-277	Instant start	72258	GE132MAXP-L/ULTRA	1- F32T8 120 to 277 "L" .77BF UltraMax®
	120-277	Instant start	72259	GE132MAXP-N/ULTRA	1- F32T8 120 to 277"N" .87 BF UltraMax®
	120-277	Instant start	72269	GE132MAX-G-N	1- F32T8 120 to 277 "N".87 BF UltraMax®
	120-277	Programmed start	75954	GE132-MVPS-H	1 F32T8 120V-277V High Light 1.18 BF<10% THD UltraStart®
	120-277	Programmed start	75952	GE132-MVPS-L	1 F32T8 120V-277V Low Watts .71 BF <10% THD UltraStart®
	120-277	Programmed start	75953	GE132-MVPS-N	1 F32T8 120V-277V Normal Light .88 BF<10% THD UltraStart®
	120-277	Instant start	73233	GE232MAXP90-S60	2 or 1 - F32T8 120 to 277 "H" 1.18 BF UltraMax® 100/60% step dim
	120-277	Instant start	73234	GE232MAXP90-V60	2 or 1 - F32T8 120 to 277 "H" 1.18 BF UltraMax® 0-10V 100-60% dim
	120-277	Instant start	72262	GE232MAXP-L/ULTRA	2 or 1- F32T8 120 to 277 "L" .77 BF UltraMax®
	120-277	Instant start	72266	GE232MAXP-N/ULTRA	2 or 1- F32T8 120 to 277 "N" .87 BF UltraMax®
	120-277	Instant start	71421	GE232MAXP-N+	2 or 1- F32T8 120 to 277 "N+" 1.0 BF UltraMax®
	120-277	Instant start	74803	GE232MAX-G-H	2 or 1- F32T8 120 to 277 "H" 1.18 BF UltraMax®
	120-277	Instant start	72273	GE232MAX-G-L	2 or 1- F32T8 120 to 277 "L".77 BF UltraMax®
	120-277	Instant start	72275	GE232MAX-G-N	2 or 1- F32T8 120 to 277 "N".87 BF UltraMax®
	120-277	Programmed start	29675	GE-232-MVPS-H	2 F32T8 120V-277V High Light 1.15 BF UltraStart®
	120-277	Programmed start	96720	GE232-MVPS-L	2 or 1 F32T8 120V-277V Low Watt .71 BF UltraStart® Program Start
	120-277	Programmed start	96714	GE232-MVPS-N	2 or 1 F32T8 120V-277V Normal Light .88 BF UltraStart®
	120-277	Programmed start	29671	GE-232-MVPS-XL	2 or 1 F32T8 120V-277V Ultra Low Watt .60 BF UltraStart®
	120-277	Instant start	73231	GE332MAXP90-S60	3 - F32T8 120 to 277 "H" 1.18 BF UltraMax® 100/60% step dim
	120-277	Instant start	73232	GE332MAXP90-V60	3 - F32T8 120 to 277 "H" 1.18 BF UltraMax® 0-10V 100-60% dim
	120-277	Instant start	71714	GE332MAXP-H/ULTRA	3 or 2- F32T8 120 to 277 "H" 1.18 BF UltraMax®
	120-277	Instant start	71717	GE332MAXP-L/ULTRA	3 or 2- F32T8 120 to 277 "L" .77 BF UltraMax®
	120-277	Instant start	71719	GE332MAXP-N/ULTRA	3 or 2- F32T8 120 to 277 "N" .87 BF UltraMax®
	120-277	Instant start	71422	GE332MAXP-N+	3 or 2- F32T8 120 to 277 "N+" 1.0 BF UltraMax®
	120-277	Instant start	74461	GE332MAX-G-H	3 or 2- F32T8 120 to 277 "H" 1.18 BF UltraMax®
	120-277	Instant start	74459	GE332MAX-G-L	3 or 2- F32T8 120 to 277 UltraMax®
	120-277	Instant start	74456	GE332MAX-G-N	3 or 2- F32T8 120 to 277 "N".87 BF UltraMax®
	120-277	Programmed start	29676	GE-332-MVPS-H	3 F32T8 120V-277V High Light 1.15 BF UltraStart®
	120-277	Programmed start	96721	GE332-MVPS-L	3 F32T8 120V-277V Low Watt .71 BF UltraStart®
	120-277	Programmed start	96715	GE332-MVPS-N	3 F32T8 120V-277V Normal Light .88 BF UltraStart®
	120-277	Programmed start	29672	GE-332-MVPS-XL	3 F32T8 120V-277V Ultra Low Watt .60 BF UltraStart®
	120-277	Instant start	73229	GE432MAXP90-S60	4 - F32T8 120 to 277 "H" 1.18 BF UltraMax® 100/60% step dim
	120-277	Instant start	73230	GE432MAXP90-V60	4 - F32T8 120 to 277 "H" 1.18 BF UltraMax® 0-10V 100-60% dim
	120-277	Instant start	71723	GE432MAXP-H/ULTRA	4 or 3- F32T8 120 to 277 "H" 1.18 BF UltraMax®
	120-277	Instant start	71725	GE432MAXP-L/ULTRA	4 or 3- F32T8 120 to 277 "L" .77 BF UltraMax®
	120-277	Instant start	71727	GE432MAXP-N/ULTRA	4 or 3- F32T8 120 to 277 "N" .87 BF UltraMax®
	120-277	Instant start	71423	GE432MAXP-N+	4 or 3- F32T8 120 to 277 "N+" 1.0 BF UltraMax®
	120-277	Instant start	30219	GE432MAX-G-H	4 or 3- F32T8 120 to 277 "H" 1.15 BF UltraMax®
	120-277	Instant start	74466	GE432MAX-G-L	4 or 3- F32T8 120 to 277 "L" .77 BF UltraMax®
	120-277	Instant start	74463	GE432MAX-G-N	4 or 3- F32T8 120 to 277 "N".87 BF UltraMax®
	120-277	Programmed start	74476	GE432-MVPS-H	4 F32T8 120V-277V High Light 1.18 BF UltraStart®
	120-277	Programmed start	71832	GE432-MVPS-L	4 F32T8 120V-277V Low Watt .71 BF UltraStart®
	120-277	Programmed start	96716	GE432-MVPS-N	4 F32T8 120V-277V Normal Light .88 BF UltraStart®
	120-277	Instant start	74117	GE632MAXP-H90	6 or 5 - F32T8 120 to 277 "H" 1.18 BF UltraMax®
	120-277	Instant start	71497	GE632MAXP-H90-S60	6 or 5 - F32T8 120 to 277 "H" 1.18 BF UltraMax® 95% efficiency, 1-wire powerline 100/60% step dim
	120-277	Instant start	71731	GE632MAXP-H90-V60	6 or 5 - F32T8 120 to 277 "H" 1.18 BF UltraMax® 95% efficiency, 2-wire 0-10V 100-60% continuous dim
F17T8/WM	347	Instant start	74109	GE232MAXP347-H	2 or 1- F32T8 347V "H" 1.18 BF UltraMax®
	347	Instant start	74096	GE232MAXP347-L	2 or 1- F32T8 347V "L" .77 BF UltraMax®
	347	Instant start	74093	GE232MAXP347-N	2 or 1- F32T8 347V "N" .87 BF UltraMax®
	347	Instant start	74103	GE232MAX-G-N-347	2 or 1- F32T8 347V "N" .87 BF UltraMax®
	347	Instant start	74111	GE332MAXP347-H	3 - F32T8 347V "H" 1.18 BF UltraMax®
	347	Instant start	74097	GE332MAXP347-L	3 or 2- F32T8 347V "L" .77 BF UltraMax®
	347	Instant start	74094	GE332MAXP347-N	3 or 2- F32T8 347V "N" .87 BF UltraMax®
	347	Instant start	74105	GE332MAX-G-N-347	3 or 2- F32T8 347V "N" .87 BF UltraMax®
	347	Instant start	74113	GE432MAXP347-H	4 - F32T8 347V "H" 1.18 BF UltraMax®
	347	Instant start	74098	GE432MAXP347-L	4 or 3- F32T8 347V "L" .77 BF UltraMax®
	347	Instant start	74095	GE432MAXP347-N	4 or 3- F32T8 347V "N" .87 BF UltraMax®
	347	Instant start	74107	GE432MAX-G-N-347	4 or 3- F32T8 347V "N" .87 BF UltraMax®
	120-277	Programmed start	75954	GE132-MVPS-H	1 F32T8 120V-277V High Light 1.18 BF<10% THD UltraStart®
	120-277	Programmed start	75952	GE132-MVPS-L	1 F32T8 120V-277V Low Watts .71 BF <10% THD UltraStart®
	120-277	Programmed start	75953	GE132-MVPS-N	1 F32T8 120V-277V Normal Light .88 BF<10% THD UltraStart®
F20T12	120-277	Rapid start	74472	GE240RS-MV-N	2 or 1- F40 or F34T12 Rapid Start 120 to 277 "N" BF

See page E-1 for warranty information.

Lamp Type	Voltage	Fluorescent Ballast Type	Ballast Product Code	Ballast Description	Fluorescent Ballast Long Description
Fluorescent Lamps (continued)					
F20T12 (cont)	120-277	Rapid start	74472	GE240RS-MV-N	2 or 1- F40 or F34T12 Rapid Start 120 to 277 "N" BF
F21T5/HE	120-277	Programmed start	68993	GE228MVPS-MC	2- F28T5 PRS UNV 50/60 Hz
	120-277	Programmed start	68993	GE228MVPS-MC	2 or 1 - F14-F35HE 120 to 277 UltraStart® PS Normal Light .95 BF A Can
	120-277	Programmed start	68994	GE228MVPS-H-MC	2 or 1 - F14-F35HE 120 to 277 UltraStart® PS High Light 1.15 BF A Can
F21T5/WM	120-277	Programmed start	68993	GE228MVPS-MC	2 or 1 - F14-F35HE 120 to 277 UltraStart® PS Normal Light .95 BF A Can
	120-277	Programmed start	68994	GE228MVPS-H-MC	2 or 1 - F14-F35HE 120 to 277 UltraStart® PS High Light 1.15 BF A Can
F24T5/HO	120-277	Programmed start	68976	GE-224MVPS-N	2- F24T5HO PRS UNV 50/60 Hz
	120-277	Programmed start	47540	B239PUNV-DOG1C	2- F39T5HO PRS UNV 50/60 Hz
F25T12	120	Rapid start	97498	GE240RS120	2 F40 or F34T12 Rapid Start 120V "N" BF ProLine® T12
	347	Instant start	74101	GE132MAX-G-N-347	1- F32T8 347V "N" .87 BF UltraMax®
	347	Instant start	74109	GE232MAXP347-H	2 or 1- F32T8 347V "H" 1.18 BF UltraMax®
	347	Instant start	74096	GE232MAXP347-L	2 or 1- F32T8 347V "L" .77 BF UltraMax®
	347	Instant start	74093	GE232MAXP347-N	2 or 1- F32T8 347V "N" .87 BF UltraMax®
	347	Instant start	74103	GE232MAX-G-N-347	2 or 1- F32T8 347V "N" .87 BF UltraMax®
	347	Instant start	74111	GE332MAXP347-H	3 - F32T8 347V "H" 1.18 BF UltraMax®
	347	Instant start	74097	GE332MAXP347-L	3 or 2- F32T8 347V "L" .77 BF UltraMax®
	347	Instant start	74094	GE332MAXP347-N	3 or 2- F32T8 347V "N" .87 BF UltraMax®
	347	Instant start	74105	GE332MAX-G-N-347	3 or 2- F32T8 347V "N" .87 BF UltraMax®
	347	Instant start	74113	GE432MAXP347-H	4 - F32T8 347V "H" 1.18 BF UltraMax®
	347	Instant start	74098	GE432MAXP347-L	4 or 3- F32T8 347V "L" .77 BF UltraMax®
	347	Instant start	74095	GE432MAXP347-N	4 or 3- F32T8 347V "N" .87 BF UltraMax®
	347	Instant start	74107	GE432MAX-G-N-347	4 or 3- F32T8 347V "N" .87 BF UltraMax®
	120-277	Instant start	72258	GE132MAXP-L/ULTRA	1- F32T8 120 to 277 "L" .77BF UltraMax®
	120-277	Instant start	72259	GE132MAXP-N/ULTRA	1- F32T8 120 to 277"N" .87 BF UltraMax®
	120-277	Programmed start	75954	GE132-MVPS-H	1 F32T8 120V-277V High Light 1.18 BF<10% THD UltraStart®
	120-277	Programmed start	75952	GE132-MVPS-L	1 F32T8 120V-277V Low Watts .71 BF <10% THD UltraStart®
	120-277	Programmed start	75953	GE132-MVPS-N	1 F32T8 120V-277V Normal Light .88 BF<10% THD UltraStart®
	120-277	Instant start	72262	GE232MAXP-L/ULTRA	2 or 1- F32T8 120 to 277 "L" .77 BF UltraMax®
	120-277	Instant start	72266	GE232MAXP-N/ULTRA	2 or 1- F32T8 120 to 277 "N" .87 BF UltraMax®
	120-277	Instant start	71421	GE232MAXP-N+	2 or 1- F32T8 120 to 277 "N+" 1.0 BF UltraMax®
	120-277	Instant start	78619	GE332MAXP-H/ULTRA	3 or 2- F32T8 120 to 277 "H" 1.18 BF UltraMax®
	120-277	Instant start	78621	GE332MAXP-L/ULTRA	3 or 2- F32T8 120 to 277 "L" .77 BF UltraMax®
	120-277	Instant start	78623	GE332MAXP-N/ULTRA	3 or 2- F32T8 120 to 277 "N" .87 BF UltraMax®
	120-277	Instant start	71422	GE332MAXP-N+	3 or 2- F32T8 120 to 277 "N+" 1.0 BF UltraMax®
	120-277	Instant start	71723	GE432MAXP-H/ULTRA	4 or 3- F32T8 120 to 277 "H" 1.18 BF UltraMax®
	120-277	Instant start	78625	GE432MAXP-L/ULTRA	4 or 3- F32T8 120 to 277 "L" .77 BF UltraMax®
	120-277	Instant start	78627	GE432MAXP-N/ULTRA	4 or 3- F32T8 120 to 277 "N" .87 BF UltraMax®
	120-277	Instant start	71423	GE432MAXP-N+	4 or 3- F32T8 120 to 277 "N+" 1.0 BF UltraMax®
F25T8	120	Instant start	97782	GE232-120-RES	2 or 1- F32T8 120V Normal Light BF Energy Star Resi Grade Electronic Ballast
	120	Instant start	97783	GE432-120-RES	3 or 4- F32T8 120V Normal Light BF Energy Star Resi Grade Electronic Ballast
	347	Instant start	74101	GE132MAX-G-N-347	1- F32T8 347V "N" .87 BF UltraMax®
	347	Instant start	74109	GE232MAXP347-H	2 or 1- F32T8 347V "H" 1.18 BF UltraMax®
	347	Instant start	74096	GE232MAXP347-L	2 or 1- F32T8 347V "L" .77 BF UltraMax®
	347	Instant start	74093	GE232MAXP347-N	2 or 1- F32T8 347V "N" .87 BF UltraMax®
	347	Instant start	74103	GE232MAX-G-N-347	2 or 1- F32T8 347V "N" .87 BF UltraMax®
	347	Instant start	74103	GE232MAX-G-N-347	2 or 1- F32T8 347V "N" .87 BF UltraMax®
	347	Instant start	74111	GE332MAXP347-H	3 - F32T8 347V "H" 1.18 BF UltraMax®
	347	Instant start	74111	GE332MAXP347-H	3 - F32T8 347V "H" 1.18 BF UltraMax®
	347	Instant start	74097	GE332MAXP347-L	3 or 2- F32T8 347V "L" .77 BF UltraMax®
	347	Instant start	74097	GE332MAXP347-L	3 or 2- F32T8 347V "L" .77 BF UltraMax®
	347	Instant start	74094	GE332MAXP347-N	3 or 2- F32T8 347V "N" .87 BF UltraMax®
	347	Instant start	74094	GE332MAXP347-N	3 or 2- F32T8 347V "N" .87 BF UltraMax®
	347	Instant start	74105	GE332MAX-G-N-347	3 or 2- F32T8 347V "N" .87 BF UltraMax®
	347	Instant start	74105	GE332MAX-G-N-347	3 or 2- F32T8 347V "N" .87 BF UltraMax®
	347	Instant start	74113	GE432MAXP347-H	4 - F32T8 347V "H" 1.18 BF UltraMax®
	347	Instant start	74098	GE432MAXP347-L	4 or 3- F32T8 347V "L" .77 BF UltraMax®
	347	Instant start	74098	GE432MAXP347-L	4 or 3- F32T8 347V "L" .77 BF UltraMax®
	347	Instant start	74095	GE432MAXP347-N	4 or 3- F32T8 347V "N" .87 BF UltraMax®
	347	Instant start	74095	GE432MAXP347-N	4 or 3- F32T8 347V "N" .87 BF UltraMax®
	347	Instant start	74107	GE432MAX-G-N-347	4 or 3- F32T8 347V "N" .87 BF UltraMax®
	347	Instant start	74107	GE432MAX-G-N-347	4 or 3- F32T8 347V "N" .87 BF UltraMax®
	120-277	Instant start	72258	GE132MAXP-L/ULTRA	1- F32T8 120 to 277 "L" .77BF UltraMax®
	120-277	Instant start	72259	GE132MAXP-N/ULTRA	1- F32T8 120 to 277"N" .87 BF UltraMax®
	120-277	Instant start	72269	GE-132MAX-G-N	1- F32T8 120 to 277 "N".87 BF UltraMax®
	120-277	Programmed start	75954	GE132-MVPS-H	1 F32T8 120V-277V High Light 1.18 BF<10% THD UltraStart®
	120-277	Programmed start	75952	GE132-MVPS-L	1 F32T8 120V-277V Low Watts .71 BF <10% THD UltraStart®
	120-277	Programmed start	75953	GE132-MVPS-N	1 F32T8 120V-277V Normal Light .88 BF<10% THD UltraStart®
	120-277	Instant start	72262	GE232MAXP-L/ULTRA	2 or 1- F32T8 120 to 277 "L" .77 BF UltraMax®
	120-277	Instant start	72266	GE232MAXP-N/ULTRA	2 or 1- F32T8 120 to 277 "N" .87 BF UltraMax®

Quick reference lamp to ballast selection guide (cont.)

Lamp Type	Voltage	Fluorescent Ballast Type	Ballast Product Code	Ballast Description	Fluorescent Ballast Long Description
Fluorescent Lamps (continued)					
F25T8 (cont)	120-277	Instant start	71421	GE232MAXP-N+	2 or 1- F32T8 120 to 277 "N+" 1.0 BF UltraMax®
	120-277	Instant start	74803	GE232MAX-G-H	2 or 1- F32T8 120 to 277 "H" 1.18 BF UltraMax®
	120-277	Instant start	72273	GE232MAX-G-L	2 or 1- F32T8 120 to 277 "L".77 BF UltraMax®
	120-277	Instant start	72275	GE232MAX-G-N	2 or 1- F32T8 120 to 277 "N".87 BF UltraMax®
	120-277	Programmed start	29675	GE-232-MVPS-H	2 F32T8 120V-277V High Light 1.15 BF UltraStart®
	120-277	Programmed start	96720	GE232-MVPS-L	2 or 1 F32T8 120V-277V Low Watt .71 BF UltraStart® Program Start
	120-277	Programmed start	96714	GE232-MVPS-N	2 or 1 F32T8 120V-277V Normal Light .88 BF UltraStart®
	120-277	Programmed start	96714	GE232-MVPS-N	2 or 1 F32T8 120V-277V Normal Light .88 BF UltraStart®
	120-277	Programmed start	29671	GE-232-MVPS-XL	2 or 1 F32T8 120V-277V Ultra Low Watt .60 BF UltraStart®
	120-277	Instant start	78619	GE332MAXP-H/ULTRA	3 or 2- F32T8 120 to 277 "H" 1.18 BF UltraMax®
	120-277	Instant start	78621	GE332MAXP-L/ULTRA	3 or 2- F32T8 120 to 277 "L" .77 BF UltraMax®
	120-277	Instant start	78623	GE332MAX-N/ULTRA	3 or 2- F32T8 120 to 277 "N" .87 BF UltraMax®
	120-277	Instant start	71422	GE332MAXP-N+	3 or 2- F32T8 120 to 277 "N+" 1.0 BF UltraMax®
	120-277	Instant start	74461	GE332MAX-G-H	3 or 2- F32T8 120 to 277 "H" 1.18 BF UltraMax®
	120-277	Instant start	74459	GE332MAX-G-L	3 or 2- F32T8 120 to 277 "L" .77 BF UltraMax®
	120-277	Instant start	74456	GE332MAX-G-N	3 or 2- F32T8 120 to 277 "N".87 BF UltraMax®
	120-277	Programmed start	29676	GE-332-MVPS-H	3 F32T8 120V-277V High Light 1.15 BF UltraStart®
	120-277	Programmed start	96721	GE332-MVPS-L	3 F32T8 120V-277V Low Watt .71 BF UltraStart®
	120-277	Programmed start	96715	GE332-MVPS-N	3 F32T8 120V-277V Normal Light .88 BF UltraStart®
	120-277	Programmed start	29672	GE-332-MVPS-XL	3 F32T8 120V-277V Ultra Low Watt .60 BF UltraStart®
	120-277	Instant start	71723	GE432MAXP-H/ULTRA	4 or 3- F32T8 120 to 277 "H" 1.18 BF UltraMax®
	120-277	Instant start	78625	GE432MAXP-L/ULTRA	4 or 3- F32T8 120 to 277 "L" .77 BF UltraMax®
	120-277	Instant start	78627	GE432MAXP-N/ULTRA	4 or 3- F32T8 120 to 277 "N" .87 BF UltraMax®
	120-277	Instant start	71423	GE432MAXP-N+	4 or 3- F32T8 120 to 277 "N+" 1.0 BF UltraMax®
	120-277	Instant start	71423	GE432MAXP-N+	4 or 3- F32T8 120 to 277 "N+" 1.0 BF UltraMax®
	120-277	Instant start	67911	GE432MAX-G-H	4 or 3- F32T8 120 to 277 "H" 1.15 BFUltraMax®
	120-277	Instant start	74466	GE432MAX-G-L	4 or 3- F32T8 120 to 277 UltraMax®
	120-277	Instant start	74463	GE432MAX-G-N	4 or 3- F32T8 120 to 277 "N".87 BF UltraMax®
	120-277	Programmed start	74476	GE432-MVPS-H	4 F32T8 120V-277V High Light 1.18 BF UltraStart®
	120-277	Programmed start	71832	GE432-MVPS-L	4 F32T8 120V-277V Low Watt .71 BF UltraStart®
	120-277	Programmed start	96716	GE432-MVPS-N	4 F32T8 120V-277V Normal Light .88 BF UltraStart®
	120-277	Instant start	74117	GE632MAX-H90	6 or 5 - F32T8 120 to 277 "H" 1.18 BF UltraMax®
	120-277	Instant start	71497	GE632MAXP-H90-S60	6 or 5 - F32T8 120 to 277 "H" 1.18 BF UltraMax® 95% efficiency, 1-wire powerline 100/60% step dim
	120-277	Instant start	71731	GE632MAXP-H90-V60	6 or 5 - F32T8 120 to 277 "H" 1.18 BF UltraMax® 95% efficiency, 2-wire 0-10V 100-60% continuous dim
F25T8/WM	347	Instant start	74101	GE132MAX-G-N-347	1- F32T8 347V "N" .87 BF ProLine®
	347	Instant start	74109	GE232MAXP347-H	2 or 1- F32T8 347V "H" 1.18 BF UltraMax®
	347	Instant start	74096	GE232MAXP347-L	2 or 1- F32T8 347V "L" .77 BF UltraMax®
	347	Instant start	74093	GE232MAXP347-N	2 or 1- F32T8 347V "N" .87 BF UltraMax®
	347	Instant start	74103	GE232MAX-G-N-347	2 or 1- F32T8 347V "N" .87 BF UltraMax®
	347	Instant start	74111	GE332MAXP347-H	3 - F32T8 347V "H" 1.18 BF UltraMax®
	347	Instant start	74097	GE332MAXP347-L	3 or 2- F32T8 347V "L" .77 BF UltraMax®
	347	Instant start	74094	GE332MAXP347-N	3 or 2- F32T8 347V "N" .87 BF UltraMax®
	347	Instant start	74105	GE332MAX-G-N-347	3 or 2- F32T8 347V "N" .87 BF UltraMax®
	347	Instant start	74113	GE432MAXP347-H	4 - F32T8 347V "H" 1.18 BF UltraMax®
	347	Instant start	74098	GE432MAXP347-L	4 or 3- F32T8 347V "L" .77 BF UltraMax®
	347	Instant start	74095	GE432MAXP347-N	4 or 3- F32T8 347V "N" .87 BF UltraMax®
	347	Instant start	74107	GE432MAX-G-N-347	4 or 3- F32T8 347V "N" .87 BF UltraMax®
	120-277	Programmed start	75954	GE132-MVPS-H	1 F32T8 120V-277V High Light 1.18 BF<10% THD UltraStart®
	120-277	Programmed start	75952	GE132-MVPS-L	1 F32T8 120V-277V Low Watts .71 BF <10% THD UltraStart®
	120-277	Programmed start	75953	GE132-MVPS-N	1 F32T8 120V-277V Normal Light .88 BF<10% THD UltraStart®
F28T5	120-277	Instant start	75948	GEC140MAX-A	1-FT40W-25W/2G11 Biax®- 120-277V UltraMax® Instant Start
	120-277	Instant start	71435	GEC240MAX-A	2 or 1-FT40W-25W/2G11 Biax®- 120-277V UltraMax® Instant Start
	120-277	Instant start	71436	GEC340MAX-A	3-FT40W-25W/2G11 Biax®- 120-277V UltraMax® Instant Start
F28T5/HE	120-277	Programmed start	68993	GE228MVPS-MC	2- F28T5 PRS UNV 50/60 Hz
	120-277	Programmed start	68993	GE228MVPS-MC	2 or 1 - F14-F35HE 120 to 277 UltraStart® PS Normal Light .95 BF A Can
	120-277	Programmed start	68994	GE228MVPS-MC-H	2 or 1 - F14-F35HE 120 to 277 UltraStart® PS High Light 1.15 BF A Can
F28T5/HL	120-277	Programmed start	68993	GE228MVPS-MC	2 or 1 - F14-F35HE 120 to 277 UltraStart® PS Normal Light .95 BF A Can
	120-277	Programmed start	68994	GE228MVPS-MC-H	2 or 1 - F14-F35HE 120 to 277 UltraStart® PS High Light 1.15 BF A Can
F28T5/WM	120-277	Programmed start	68993	GE228MVPS-MC	2 or 1 - F14-F35HE 120 to 277 UltraStart® PS Normal Light .95 BF A Can
	120-277	Programmed start	68994	GE228MVPS-MC-H	2 or 1 - F14-F35HE 120 to 277 UltraStart® PS High Light 1.15 BF A Can
F28T8	120	Instant start	97782	GE232-120-RES	2 or 1- F32T8 120V Normal Light BF Energy Star Resi Grade Electronic Ballast
	120	Instant start	97783	GE432-120-RES	3 or 4- F32T8 120V Normal Light BF Energy Star Resi Grade Electronic Ballast
	347	Instant start	74101	GE132MAX-G-N-347	1- F32T8 347V "N" .87 BF UltraMax®
	347	Instant start	74109	GE232MAXP347-H	2 or 1- F32T8 347V "H" 1.18 BF UltraMax®
	347	Instant start	74096	GE232MAXP347-L	2 or 1- F32T8 347V "L" .77 BF UltraMax®
	347	Instant start	74093	GE232MAXP347-N	2 or 1- F32T8 347V "N" .87 BF UltraMax®
	347	Instant start	74103	GE232MAX-G-N-347	2 or 1- F32T8 347V "N" .87 BFUltraMax®
	347	Instant start	74111	GE332MAXP347-H	3 - F32T8 347V "H" 1.18 BF UltraMax®
	347	Instant start	74097	GE332MAXP347-L	3 or 2- F32T8 347V "L" .77 BF UltraMax®
	347	Instant start	74094	GE332MAXP347-N	3 or 2- F32T8 347V "N" .87 BF UltraMax®

See page E-1 for warranty information.

Fluorescent Lamps (continued)

Lamp Type	Voltage	Fluorescent Ballast Type	Ballast Product Code	Ballast Description	Fluorescent Ballast Long Description
F28T8 (cont)	347	Instant start	74105	GE332MAX-G-N-347	3 or 2- F32T8 347V "N" .87 BF UltraMax®
	347	Instant start	74113	GE432MAXP347-H	4 - F32T8 347V "H" 1.18 BF UltraMax®
	347	Instant start	74098	GE432MAXP347-L	4 or 3- F32T8 347V "L" .77 BF UltraMax®
	347	Instant start	74095	GE432MAXP347-N	4 or 3- F32T8 347V "N" .87 BF UltraMax®
	347	Instant start	74107	GE432MAX-G-N-347	4 or 3- F32T8 347V "N" .87 BF UltraMax®
	120-277	Instant start	72258	GE132MAXP-L/ULTRA	1- F32T8 120 to 277 "L" .77BF UltraMax®
	120-277	Instant start	72259	GE132MAXP-N/ULTRA	1- F32T8 120 to 277"N" .87 BF UltraMax®
	120-277	Instant start	72269	GE132MAX-G-N	1- F32T8 120 to 277 "N".87 BF UltraMax® F28T8
	120-277	Programmed start	75954	GE132-MVPS-H	1 F32T8 120V-277V High Light 1.18 BF<10% THD UltraStart®
	120-277	Programmed start	75952	GE132-MVPS-L	1 F32T8 120V-277V Low Watts .71 BF <10% THD UltraStart®
	120-277	Programmed start	75953	GE132-MVPS-N	1 F32T8 120V-277V Normal Light .88 BF<10% THD UltraStart®
	120-277	Instant start	73233	GE232MAXP90-S60	2 or 1 - F32T8 120 to 277 "H" 1.18 BF UltraMax® 100/60% step dim
	120-277	Instant start	73234	GE232MAXP90-V60	2 or 1 - F32T8 120 to 277 "H" 1.18 BF UltraMax® 0-10V 100-60% dim
	120-277	Instant start	72262	GE232MAXP-L/ULTRA	2 or 1- F32T8 120 to 277 "L" .77 BF UltraMax®
	120-277	Instant start	72266	GE232MAXP-N/ULTRA	2 or 1- F32T8 120 to 277 "N" .87 BF UltraMax®
	120-277	Instant start	71421	GE232MAXP-N+	2 or 1- F32T8 120 to 277 "N+" 1.0 BF UltraMax®
	120-277	Instant start	74803	GE232MAX-G-H	2 or 1- F32T8 120 to 277 "H" 1.18 BFUltraMax®
	120-277	Instant start	72273	GE-232MAX-G-L	2 or 1- F32T8 120 to 277 "L".77 BF UltraMax®
	120-277	Instant start	72275	GE-232MAX-G-N	2 or 1- F32T8 120 to 277 "N".87 BF UltraMax®
	120-277	Programmed start	29675	GE-232-MVPS-H	2 F32T8 120V-277V High Light 1.15 BF UltraStart®
	120-277	Programmed start	96720	GE232-MVPS-L	2 or 1 F32T8 120V-277V Low Watt .71 BF UltraStart® Program Start
	120-277	Programmed start	29671	GE-232-MVPS-XL	2 or 1 F32T8 120V-277V Ultra Low Watt .60 BF UltraStart®
	120-277	Instant start	73231	GE332MAXP90-S60	3 - F32T8 120 to 277 "H" 1.18 BF UltraMax® 100/60% step dim
	120-277	Instant start	73232	GE332MAXP90-V60	3 - F32T8 120 to 277 "H" 1.18 BF UltraMax® 0-10V 100-60% dim
	120-277	Instant start	71714	GE332MAXP-H/ULTRA	3 or 2- F32T8 120 to 277 "H" 1.18 BF UltraMax®
	120-277	Instant start	78621	GE332MAXP-L/ULTRA	3 or 2- F32T8 120 to 277 "L" .77 BF UltraMax®
	120-277	Instant start	78623	GE332MAXP-N/ULTRA	3 or 2- F32T8 120 to 277 "N" .87 BF UltraMax®
	120-277	Instant start	71422	GE332MAXP-N+	3 or 2- F32T8 120 to 277 "N+" 1.0 BF UltraMax®
	120-277	Instant start	74461	GE332MAX-G-H	3 or 2- F32T8 120 to 277 "H" 1.18 BF UltraMax®
	120-277	Instant start	74459	GE332MAX-G-L	3 or 2- F32T8 120 to 277 "L" .77 BF UltraMax®
	120-277	Instant start	74456	GE332MAX-G-N	3 or 2- F32T8 120 to 277 "N".87 BF UltraMax®
	120-277	Programmed start	29676	GE-332-MVPS-H	3 F32T8 120V-277V High Light 1.15 BF UltraStart®
	120-277	Programmed start	96721	GE332-MVPS-L	3 F32T8 120V-277V Low Watt .71 BF UltraStart®
	120-277	Programmed start	96715	GE332-MVPS-N	3 F32T8 120V-277V Normal Light .88 BF UltraStart®
	120-277	Programmed start	29672	GE-332-MVPS-XL	3 F32T8 120V-277V Ultra Low Watt .60 BF UltraStart®
	120-277	Instant start	73229	GE432MAXP90-S60	4 - F32T8 120 to 277 "H" 1.18 BF UltraMax® 100/60% step dim
	120-277	Instant start	73230	GE432MAXP90-V60	4 - F32T8 120 to 277 "H" 1.18 BF UltraMax® 0-10V 100-60% dim
	120-277	Instant start	71723	GE432MAXP-H/ULTRA	4 or 3- F32T8 120 to 277 "H" 1.18 BF UltraMax®
	120-277	Instant start	78625	GE432MAXP-L/ULTRA	4 or 3- F32T8 120 to 277 "L" .77 BF UltraMax®
	120-277	Instant start	78627	GE432MAXP-N/ULTRA	4 or 3- F32T8 120 to 277 "N" .87 BF UltraMax®
	120-277	Instant start	71423	GE432MAXP-N+	4 or 3- F32T8 120 to 277 "N+" 1.0 BF UltraMax®
	120-277	Instant start	67911	GE432MAX-G-H	4 or 3- F32T8 120 to 277 "H" 1.15 BF UltraMax®
	120-277	Instant start	74466	GE432MAX-G-L	4 or 3- F32T8 120 to 277 "L" .77 BF UltraMax®
	120-277	Instant start	74463	GE432MAX-G-N	4 or 3- F32T8 120 to 277 "N".87 BF UltraMax®
	120-277	Programmed start	74476	GE432-MVPS-H	4 F32T8 120V-277V High Light 1.18 BF UltraStart®
	120-277	Programmed start	71832	GE432-MVPS-L	4 F32T8 120V-277V Low Watt .71 BF UltraStart®
	120-277	Programmed start	96716	GE432-MVPS-N	4 F32T8 120V-277V Normal Light .88 BF UltraStart®
	120-277	Instant start	74117	GE632MAXP-H90	6 or 5 - F32T8 120 to 277 "H" 1.18 BF UltraMax®
	120-277	Instant start	71497	GE632MAXP-H90-S60	6 or 5 - F32T8 120 to 277 "H" 1.18 BF UltraMax® 95% efficiency, 1-wire powerline 100/60% step dim
	120-277	Instant start	71731	GE632MAXP-H90-V60	6 or 5 - F32T8 120 to 277 "H" 1.18 BF UltraMax® 95% efficiency, 2-wire 0-10V 100-60% continuous dim
F30T12	120	Rapid start	75672	GE140RS120	1 F40 or F34T12 Rapid Start Electronic 120V "N" BF
	120	Rapid start	97498	GE240RS120	2 F40 or F34T12 Rapid Start 120V "N" BF ProLine® T12
	120-277	Rapid start	74472	GE240RS-MV-N	2 or 1- F40 or F34T12 Rapid Start 120 to 277 "N" BF
F30T12/WM	120-277	Rapid start	74472	GE240RS-MV-N	2 or 1- F40 or F34T12 Rapid Start 120 to 277 "N" BF
	120-277	Rapid start	24107	GE-240-RS-MV-N	2 or 1- F40 or F34T12 Rapid Start 120 to 277 "N" BF
	120-277	Rapid start	24109	GE-340-RS-MV-N	3 or 2- F40 or F34T12 Rapid Start 120 to 277
F32T8			74119	GETR480/277-250W	Transformer 480 to 277V, <250 Watts(VA), A can
			74120	GETR480/277-375W	Transformer 480 to 277V, <375 Watts (VA), F can
	120	Instant start	97782	GE232-120-RES	2 or 1- F32T8 120V Normal Light BF Energy Star Resi Grade Electronic Ballast
	120	Instant start	23673	GE-332-120-N	3 or 2- F32T8 120V "N".87 BF
	120	Instant start	97783	GE432-120-RES	3 or 4- F32T8 120V Normal Light BF Energy Star Resi Grade Electronic Ballast
	120	Rapid start	87125	GEM232T8RS120	2- F32T8 RS 120V Magnetic Ballast (M232SR120C)
	347	Instant start	74101	GE132MAX-G-N-347	1- F32T8 347V "N" .87 BF ProLine®
	347	Instant start	74109	GE232MAXP347-H	2 or 1- F32T8 347V "H" 1.18 BF UltraMax®
	347	Instant start	74096	GE232MAXP347-L	2 or 1- F32T8 347V "L" .77 BF UltraMax®
	347	Instant start	74093	GE232MAXP347-N	2 or 1- F32T8 347V "N" .87 BF UltraMax®
	347	Instant start	74103	GE232MAX-G-N-347	2 or 1- F32T8 347V "N" .87 BF ProLine®
	347	Instant start	74111	GE332MAXP347-H	3 - F32T8 347V "H" 1.18 BF UltraMax®
	347	Instant start	74097	GE332MAXP347-L	3 or 2- F32T8 347V "L" .77 BF UltraMax®
	347	Instant start	74094	GE332MAXP347-N	3 or 2- F32T8 347V "N" .87 BF UltraMax®

Quick reference lamp to ballast selection guide (cont.)

Lamp Type	Voltage	Fluorescent Ballast Type	Ballast Product Code	Ballast Description	Fluorescent Ballast Long Description
Fluorescent Lamps (continued)					
F32T8 (cont)	347	Instant start	74105	GE332MAX-G-N-347	3 or 2- F32T8 347V "N" .87 BF UltraMax®
	347	Instant start	74113	GE432MAXP347-H	4 - F32T8 347V "H" 1.18 BF UltraMax®
	347	Instant start	74098	GE432MAXP347-L	4 or 3- F32T8 347V "L" .77 BF UltraMax®
	347	Instant start	74095	GE432MAXP347-N	4 or 3- F32T8 347V "N" .87 BF UltraMax®
	347	Instant start	74107	GE432MAX-G-N-347	4 or 3- F32T8 347V "N" .87 BF UltraMax®
	120-277	Instant start	72258	GE132MAXP-L/ULTRA	1- F32T8 120 to 277 "L" .77BF UltraMax®
	120-277	Instant start	72259	GE132MAXP-N/ULTRA	1- F32T8 120 to 277"N" .87 BF UltraMax®
	120-277	Instant start	72269	GE132MAX-G-N	1- F32T8 120 to 277 "N".87 BF UltraMax®
	120-277	Programmed start	75954	GE132-MVPS-H	1 F32T8 120V-277V High Light 1.18 BF<10% THD UltraStart®
	120-277	Programmed start	75952	GE132-MVPS-L	1 F32T8 120V-277V Low Watts .71 BF <10% THD UltraStart®
	120-277	Programmed start	75953	GE132-MVPS-N	1 F32T8 120V-277V Normal Light .88 BF<10% THD UltraStart®
	120-277	Instant start	73233	GE232MAXP90-S60	2 or 1 - F32T8 120 to 277 "H" 1.18 BF UltraMax® 100/60% step dim
	120-277	Instant start	73234	GE232MAXP90-V60	2 or 1 - F32T8 120 to 277 "H" 1.18 BF UltraMax® 0-10V 100-60% dim
	120-277	Instant start	72262	GE232MAXP-L/ULTRA	2 or 1- F32T8 120 to 277 "L" .77 BF UltraMax®
	120-277	Instant start	72266	GE232MAXP-N/ULTRA	2 or 1- F32T8 120 to 277 "N" .87 BF UltraMax®
	120-277	Instant start	71421	GE232MAXP-N+	2 or 1- F32T8 120 to 277 "N+" 1.0 BF UltraMax®
	120-277	Instant start	74803	GE232MAX-G-H	2 or 1- F32T8 120 to 277 "H" 1.18 BF UltraMax®
	120-277	Instant start	72273	GE232MAX-G-L	2 or 1- F32T8 120 to 277 "L".77 BF UltraMax®
	120-277	Instant start	72275	GE232MAX-G-N	2 or 1- F32T8 120 to 277 "N".87 BF UltraMax®
	120-277	Programmed start	96720	GE232-MVPS-L	2 or 1 F32T8 120V-277V Low Watt .71 BF UltraStart® Program Start
	120-277	Programmed start	96714	GE232-MVPS-N	2 or 1 F32T8 120V-277V Normal Light .88 BF UltraStart®
	120-277	Programmed start	29671	GE-232-MVPS-XL	2 or 1 F32T8 120V-277V Ultra Low Watt .60 BF UltraStart®
	120-277	Instant start	73231	GE332MAXP90-S60	3 - F32T8 120 to 277 "H" 1.18 BF UltraMax® 100/60% step dim
	120-277	Instant start	73232	GE332MAXP90-V60	3 - F32T8 120 to 277 "H" 1.18 BF UltraMax® 0-10V 100-60% dim
	120-277	Instant start	78619	GE332MAXP-H/ULTRA	3 or 2- F32T8 120 to 277 "H" 1.18 BF UltraMax®
	120-277	Instant start	78621	GE332MAXP-L/ULTRA	3 or 2- F32T8 120 to 277 "L" .77 BF UltraMax®
	120-277	Instant start	78623	GE332MAXP-N/ULTRA	3 or 2- F32T8 120 to 277 "N" .87 BF UltraMax®
	120-277	Instant start	71422	GE332MAXP-N+	3 or 2- F32T8 120 to 277 "N+" 1.0 BF UltraMax®
	120-277	Instant start	74461	GE332MAX-G-H	3 or 2- F32T8 120 to 277 "H" 1.18 BF
	120-277	Instant start	74459	GE332MAX-G-L	3 or 2- F32T8 120 to 277 "L" .77 BF UltraMax®
	120-277	Instant start	74456	GE332MAX-G-N	3 or 2- F32T8 120 to 277 "N".87 BF
	120-277	Programmed start	29676	GE-332-MVPS-H	3 F32T8 120V-277V High Light 1.15 BF UltraStart®
	120-277	Programmed start	96721	GE332-MVPS-L	3 F32T8 120V-277V Low Watt .71 BF UltraStart®
	120-277	Programmed start	96715	GE332-MVPS-N	3 F32T8 120V-277V Normal Light .88 BF UltraStart®
	120-277	Programmed start	29672	GE-332-MVPS-XL	3 F32T8 120V-277V Ultra Low Watt .60 BF UltraStart®
	120-277	Instant start	73229	GE432MAXP90-S60	4 - F32T8 120 to 277 "H" 1.18 BF UltraMax® 100/60% step dim
	120-277	Instant start	73230	GE432MAXP90-V60	4 - F32T8 120 to 277 "H" 1.18 BF UltraMax® 0-10V 100-60% dim
	120-277	Instant start	71723	GE432MAXP-H/ULTRA	4 or 3- F32T8 120 to 277 "H" 1.18 BF UltraMax®
	120-277	Instant start	78625	GE432MAXP-L/ULTRA	4 or 3- F32T8 120 to 277 "L" .77 BF UltraMax®
	120-277	Instant start	78627	GE432MAXP-N/ULTRA	4 or 3- F32T8 120 to 277 "N" .87 BF UltraMax®
	120-277	Instant start	71423	GE432MAXP-N+	4 or 3- F32T8 120 to 277 "N+" 1.0 BF UltraMax®
	120-277	Instant start	67911	GE432MAX-G-H	4 or 3- F32T8 120 to 277 "H" 1.15 BF UltraMax®
	120-277	Instant start	74466	GE432MAX-G-L	4 or 3- F32T8 120 to 277 UltraMax®
	120-277	Instant start	74463	GE432MAX-G-N	4 or 3- F32T8 120 to 277 "N".87 BF UltraMax®
	120-277	Programmed start	74476	GE432-MVPS-H	4 F32T8 120V-277V High Light 1.18 BF UltraStart®
	120-277	Programmed start	71832	GE432-MVPS-L	4 F32T8 120V-277V Low Watt .71 BF UltraStart®
	120-277	Programmed start	96716	GE432-MVPS-N	4 F32T8 120V-277V Normal Light .88 BF UltraStart®
	120-277	Instant start	74117	GE632MAXP-H90	6 or 5 - F32T8 120 to 277 "H" 1.18 BF UltraMax®
	120-277	Instant start	71497	GE632MAXP-H90-S60	6 or 5 - F32T8 120 to 277 "H" 1.18 BF UltraMax® 95% efficiency, 1-wire powerline 100/60% step dim
	120-277	Instant start	71731	GE632MAXP-H90-V60	6 or 5 - F32T8 120 to 277 "H" 1.18 BF UltraMax® 95% efficiency, 2-wire 0-10V 100-60% continuous dim
	120-277	Instant start	75948	GEC140MAX-A	1-FT40W-25W/2G11 Biax®- 120-277V UltraMax® Instant Start
	120-277	Instant start	71435	GEC240MAX-A	2 or 1-FT40W-25W/2G11 Biax®- 120-277V UltraMax® Instant Start
	120-277	Instant start	71436	GEC340MAX-A	3-FT40W-25W/2G11 Biax®- 120-277V UltraMax® Instant Start
F32T8/25W	347	Instant start	74101	GE132MAX-G-N-347	1- F32T8 347V "N" .87 BF UltraMax®
	347	Instant start	74109	GE232MAXP347-H	2 or 1- F32T8 347V "H" 1.18 BF UltraMax®
	347	Instant start	74096	GE232MAXP347-L	2 or 1- F32T8 347V "L" .77 BF UltraMax®
	347	Instant start	74093	GE232MAXP347-N	2 or 1- F32T8 347V "N" .87 BF UltraMax®
	347	Instant start	74103	GE232MAX-G-N-347	2 or 1- F32T8 347V "N" .87 BF UltraMax®
	347	Instant start	74111	GE332MAXP347-H	3 - F32T8 347V "H" 1.18 BF UltraMax®
	347	Instant start	74097	GE332MAXP347-L	3 or 2- F32T8 347V "L" .77 BF UltraMax®
	347	Instant start	74094	GE332MAXP347-N	3 or 2- F32T8 347V "N" .87 BF UltraMax®
	347	Instant start	74105	GE332MAX-G-N-347	3 or 2- F32T8 347V "N" .87 BF ProLine®
	347	Instant start	74113	GE432MAXP347-H	4 - F32T8 347V "H" 1.18 BF UltraMax®
	347	Instant start	74098	GE432MAXP347-L	4 or 3- F32T8 347V "L" .77 BF UltraMax®
	347	Instant start	74095	GE432MAXP347-N	4 or 3- F32T8 347V "N" .87 BF UltraMax®
	347	Instant start	74107	GE432MAX-G-N-347	4 or 3- F32T8 347V "N" .87 BF UltraMax®
	120-277	Instant start	72258	GE132MAX-L/ULTRA	1- F32T8 120 to 277 "L" .77BF UltraMax®
	120-277	Instant start	72259	GE132MAX-N/ULTRA	1- F32T8 120 to 277"N" .87 BF UltraMax®
	120-277	Instant start	72269	GE132MAX-G-N	1- F32T8 120 to 277 "N".87 BFUltraMax®
	120-277	Programmed start	75954	GE132-MVPS-H	1 F32T8 120V-277V High Light 1.18 BF<10% THD UltraStart®

See page E-1 for warranty information.

Fluorescent Lamps (continued)

Lamp Type	Voltage	Fluorescent Ballast Type	Ballast Product Code	Ballast Description	Fluorescent Ballast Long Description
F32T8/25W (cont)	120-277	Programmed start	75952	GE132-MVPS-L	1 F32T8 120V-277V Low Watts .71 BF <10% THD UltraStart®
	120-277	Programmed start	75953	GE132-MVPS-N	1 F32T8 120V-277V Normal Light .88 BF<10% THD UltraStart®
	120-277	Instant start	73233	GE232MAXP90-S60	2 or 1 - F32T8 120 to 277 "H" 1.18 BF UltraMax® 100/60% step dim
	120-277	Instant start	73234	GE232MAXP90-V60	2 or 1 - F32T8 120 to 277 "H" 1.18 BF UltraMax® 0-10V 100-60% dim
	120-277	Instant start	72262	GE232MAXP-L/ULTRA	2 or 1- F32T8 120 to 277 "L" .77 BF UltraMax®
	120-277	Instant start	72266	GE232MAXP-N/ULTRA	2 or 1- F32T8 120 to 277 "N" .87 BF UltraMax®
	120-277	Instant start	71421	GE232MAXP-N+	2 or 1- F32T8 120 to 277 "N+" 1.0 BF UltraMax®
	120-277	Instant start	74803	GE232MAX-G-H	2 or 1- F32T8 120 to 277 "H" 1.18 BF UltraMax®
	120-277	Instant start	72273	GE232MAX-G-L	2 or 1- F32T8 120 to 277 "L".77 BF UltraMax®
	120-277	Instant start	72275	GE232MAX-G-N	2 or 1- F32T8 120 to 277 "N".87 BF UltraMax®
	120-277	Programmed start	29675	GE-232-MVPS-H	2 F32T8 120V-277V High Light 1.15 BF UltraStart®
	120-277	Programmed start	96720	GE232-MVPS-L	2 or 1 F32T8 120V-277V Low Watt .71 BF UltraStart® Program Start
	120-277	Programmed start	96714	GE232-MVPS-N	2 or 1 F32T8 120V-277V Normal Light .88 BF UltraStart®
	120-277	Programmed start	29671	GE-232-MVPS-XL	2 or 1 F32T8 120V-277V Ultra Low Watt .60 BF UltraStart®
	120-277	Instant start	73231	GE332MAXP90-S60	3 - F32T8 120 to 277 "H" 1.18 BF UltraMax® 100/60% step dim
	120-277	Instant start	73232	GE332MAXP90-V60	3 - F32T8 120 to 277 "H" 1.18 BF UltraMax® 0-10V 100-60% dim
	120-277	Instant start	78619	GE332MAXP-H/ULTRA	3 or 2- F32T8 120 to 277 "H" 1.18 BF UltraMax®
	120-277	Instant start	78621	GE332MAXP-L/ULTRA	3 or 2- F32T8 120 to 277 "L" .77 BF UltraMax®
	120-277	Instant start	78623	GE332MAX-N/ULTRA	3 or 2- F32T8 120 to 277 "N" .87 BF UltraMax®
	120-277	Instant start	71422	GE332MAXP-N+	3 or 2- F32T8 120 to 277 "N+" 1.0 BF UltraMax®
	120-277	Instant start	74461	GE332MAX-G-H	3 or 2- F32T8 120 to 277 "H" 1.18 BF UltraMax®
	120-277	Instant start	74459	GE332MAX-G-L	3 or 2- F32T8 120 to 277 "L" .77 BF UltraMax®
	120-277	Instant start	74456	GE332MAX-G-N	3 or 2- F32T8 120 to 277 "N".87 BF UltraMax®
	120-277	Programmed start	29676	GE-332-MVPS-H	3 F32T8 120V-277V High Light 1.15 BF UltraStart®
	120-277	Programmed start	96721	GE332-MVPS-L	3 F32T8 120V-277V Low Watt .71 BF UltraStart®
	120-277	Programmed start	96715	GE332-MVPS-N	3 F32T8 120V-277V Normal Light .88 BF UltraStart®
	120-277	Programmed start	29672	GE-332-MVPS-XL	3 F32T8 120V-277V Ultra Low Watt .60 BF UltraStart®
	120-277	Instant start	73229	GE432MAXP90-S60	4 - F32T8 120 to 277 "H" 1.18 BF UltraMax® 100/60% step dim
	120-277	Instant start	73230	GE432MAXP90-V60	4 - F32T8 120 to 277 "H" 1.18 BF UltraMax® 0-10V 100-60% dim
	120-277	Instant start	71723	GE432MAXP-H/ULTRA	4 or 3- F32T8 120 to 277 "H" 1.18 BF UltraMax®
	120-277	Instant start	71725	GE432MAXP-L/ULTRA	4 or 3- F32T8 120 to 277 "L" .77 BF UltraMax®
	120-277	Instant start	71727	GE432MAXP-N/ULTRA	4 or 3- F32T8 120 to 277 "N" .87 BF UltraMax®
	120-277	Instant start	71423	GE432MAXP-N+	4 or 3- F32T8 120 to 277 "N+" 1.0 BF UltraMax®
	120-277	Instant start	67911	GE432MAX-G-H	4 or 3- F32T8 120 to 277 "H" 1.15 BF UltraMax®
	120-277	Instant start	74466	GE432MAX-G-L	4 or 3- F32T8 120 to 277 UltraMax®
	120-277	Instant start	74463	GE432MAX-G-N	4 or 3- F32T8 120 to 277 "N".87 BF UltraMax®
	120-277	Programmed start	74476	GE432-MVPS-H	4 F32T8 120V-277V High Light 1.18 BF UltraStart®
	120-277	Programmed start	71832	GE432-MVPS-L	4 F32T8 120V-277V Low Watt .71 BF UltraStart®
	120-277	Programmed start	96716	GE432-MVPS-N	4 F32T8 120V-277V Normal Light .88 BF UltraStart®
	120-277	Instant start	74117	GE632MAXP-H90	6 or 5 - F32T8 120 to 277 "H" 1.18 BF UltraMax®
	120-277	Instant start	71497	GE632MAXP-H90-S60	6 or 5 - F32T8 120 to 277 "H" 1.18 BF UltraMax® 95% efficiency, 1-wire powerline 100/60% step dim
	120-277	Instant start	71731	GE632MAXP-H90-V60	6 or 5 - F32T8 120 to 277 "H" 1.18 BF UltraMax® 95% efficiency, 2-wire 0-10V 100-60% continuous dim
F34T12	120	Rapid start	72110	GE140RS120	1 F40 or F34T12 Rapid Start Electronic 120V "N" BF
	120	Rapid start	97498	GE240RS120	2 F40 or F34T12 Rapid Start 120V "N" BF ProLine® T12
	120-277	Rapid start	74472	GE240RS-MV-N	2 or 1- F40 or F34T12 Rapid Start 120 to 277 "N" BF
F35T5/HE	120-277	Programmed start	68993	GE228MVPS-MC	2- F28T5 PRS UNV 50/60 Hz
	120-277	Programmed start	68993	GE228MVPS-MC	2 or 1 - F14-F35HE 120 to 277 UltraStart® PS Normal Light .95 BF A Can
F35T5/WM	120-277	Programmed start	68993	GE228MVPS-MC	2 or 1 - F14-F35HE 120 to 277 UltraStart® PS Normal Light .95 BF A Can
F39T5/HO	120-277	Programmed start	68976	GE224MVPS-N	1- F39T5HO PRS UNV 50/60 Hz
	120-277	Programmed start	47540	B239PUNV-DOG1C	2- F39T5HO PRS UNV 50/60 Hz
F40/25BX	120-277	Instant start	75948	GEC140MAX-A	1-FT40W-25W/2G11 Biax®- 120-277V UltraMax® Instant Start
	120-277	Instant start	71435	GEC240MAX-A	2 or 1-FT40W-25W/2G11 Biax®- 120-277V UltraMax® Instant Start
	120-277	Instant start	71436	GEC340MAX-A	3-FT40W-25W/2G11 Biax®- 120-277V UltraMax® Instant Start
F40/28BX	120-277	Instant start	75948	GEC140MAX-A	1-FT40W-25W/2G11 Biax®- 120-277V UltraMax® Instant Start
	120-277	Instant start	71435	GEC240MAX-A	2 or 1-FT40W-25W/2G11 Biax®- 120-277V UltraMax® Instant Start
	120-277	Instant start	71436	GEC340MAX-A	3-FT40W-25W/2G11 Biax®- 120-277V UltraMax® Instant Start
F40/30BX	120-277	Instant start	75948	GEC140MAX-A	1-FT40W-25W/2G11 Biax®- 120-277V UltraMax® Instant Start
	120-277	Instant start	71435	GEC240MAX-A	2 or 1-FT40W-25W/2G11 Biax®- 120-277V UltraMax® Instant Start
	120-277	Programmed start	71437	GEC240MVPS-A	2 or 1-FT40W/2G11 Biax®- 120-277V UltraStart® Programmed Start
	120-277	Instant start	71436	GEC340MAX-A	3-FT40W-25W/2G11 Biax®- 120-277V UltraMax® Instant Start
F40T10	120-277	Rapid start	74472	GE240RS-MV-N	2 or 1- F40 or F34T12 Rapid Start 120 to 277 "N" BF
F40T12	120	Rapid start	72110	GE140RS120	1 F40 or F34T12 Rapid Start Electronic 120V "N" BF
	120	Rapid start	97498	GE240RS120	2 F40 or F34T12 Rapid Start 120V "N" BF ProLine® T12
	120-277	Rapid start	74472	GE240RS-MV-N	2 or 1- F40 or F34T12 Rapid Start 120 to 277 "N" BF
F40T8	347	Instant start	74109	GE232MAXP347-H	2 or 1- F32T8 347V "H" 1.18 BF UltraMax®
	347	Instant start	74111	GE332MAXP347-H	3 - F32T8 347V "H" 1.18 BF UltraMax®
	347	Instant start	74113	GE432MAXP347-H	4 - F32T8 347V "H" 1.18 BF UltraMax®
	120-277	Programmed start	75954	GE132-MVPS-H	1 F32T8 120V-277V High Light 1.18 BF<10% THD UltraStart®
	120-277	Programmed start	75952	GE132-MVPS-L	1 F32T8 120V-277V Low Watts .71 BF <10% THD UltraStart®
	120-277	Programmed start	75953	GE132-MVPS-N	1 F32T8 120V-277V Normal Light .88 BF<10% THD UltraStart®

See page E-1 for warranty information.

Quick reference lamp to ballast selection guide (cont.)

Lamp Type	Voltage	Fluorescent Ballast Type	Ballast Product Code	Ballast Description	Fluorescent Ballast Long Description
Fluorescent Lamps (continued)					
F40T8 (cont)	120-277	Instant start	73233	GE232MAXP90-S60	2 or 1 - F32T8 120 to 277 "H" 1.18 BF UltraMax® 100/60% step dim
	120-277	Instant start	73234	GE232MAXP90-V60	2 or 1 - F32T8 120 to 277 "H" 1.18 BF UltraMax® 0-10V 100-60% dim
	120-277	Instant start	71421	GE232MAXP-N+	2 or 1- F32T8 120 to 277 "N+" 1.0 BF UltraMax®
	120-277	Instant start	74803	GE232MAX-G-H	2 or 1- F32T8 120 to 277 "H" 1.18 BF UltraMax®
	120-277	Instant start	72273	GE232MAX-G-L	2 or 1- F32T8 120 to 277 "L".77 BF UltraMax®
	120-277	Instant start	72275	GE232MAX-G-N	2 or 1- F32T8 120 to 277 "N".87 BF UltraMax®
	120-277	Instant start	73199	GE259MAXP-L/ULTRA	2 or 1- F96T8 120 to 277 "N" .87 BF UltraMax®
	120-277	Instant start	49767	GE259MAXP-N/ULTRA	2 or 1- F96T8 120 to 277 "N" .87 BF UltraMax®
	120-277	Instant start	30176	GE286MAXP-HO-N	2 or 1- F96T8HO IS 120 to 277 "N".87 BF UltraMax®
	120-277	Instant start	73231	GE332MAXP90-S60	3 - F32T8 120 to 277 "H" 1.18 BF UltraMax® 100/60% step dim
	120-277	Instant start	73232	GE332MAXP90-V60	3 - F32T8 120 to 277 "H" 1.18 BF UltraMax® 0-10V 100-60% dim
	120-277	Instant start	78619	GE332MAXP-H/ULTRA	3 or 2- F32T8 120 to 277 "H" 1.18 BF UltraMax®
	120-277	Instant start	71422	GE332MAXP-N+	3 or 2- F32T8 120 to 277 "N+" 1.0 BF UltraMax®
	120-277	Instant start	74461	GE332MAX-G-H	3 or 2- F32T8 120 to 277 "H" 1.18 BF UltraMax®
	120-277	Instant start	74459	GE332MAX-G-L	3 or 2- F32T8 120 to 277 "L" .77 BF UltraMax®
	120-277	Instant start	74456	GE332MAX-G-N	3 or 2- F32T8 120 to 277 "N".87 BF UltraMax®
	120-277	Instant start	73229	GE432MAXP90-S60	4 - F32T8 120 to 277 "H" 1.18 BF UltraMax® 100/60% step dim
	120-277	Instant start	73230	GE432MAXP90-V60	4 - F32T8 120 to 277 "H" 1.18 BF UltraMax® 0-10V 100-60% dim
	120-277	Instant start	71723	GE432MAXP-H/ULTRA	4 or 3- F32T8 120 to 277 "H" 1.18 BF UltraMax®
	120-277	Instant start	71423	GE432MAXP-N+	4 or 3- F32T8 120 to 277 "N+" 1.0 BF UltraMax®
	120-277	Instant start	67911	GE432MAX-G-H	4 or 3- F32T8 120 to 277 "H" 1.15 BF UltraMax®
	120-277	Instant start	74466	GE432MAX-G-L	4 or 3- F32T8 120 to 277 UltraMax®
	120-277	Instant start	74463	GE432MAX-G-N	4 or 3- F32T8 120 to 277 "N".87 BF UltraMax®
	120-277	Instant start	71497	GE632MAXP-H90-S60	6 or 5 - F32T8 120 to 277 "H" 1.18 BF UltraMax® 95% efficiency, 1-wire powerline 100/60% step dim
	120-277	Instant start	71731	GE632MAXP-H90-V60	6 or 5 - F32T8 120 to 277 "H" 1.18 BF UltraMax® 95% efficiency, 2-wire 0-10V 100-60% continuous dim
F48T12	120-277	Instant start	74474	GE260IS-MV-N	2 or 1- F96T12 Instant Start 120 to 277
F48T12/25W	120	Rapid start	72110	GE140RS120	1 F40 or F34T12 Rapid Start Electronic 120V "N" BF
F48T12/HO	120-277	Rapid start	75671	GE296HO-MV-N	2 or 1- F96T12HO RS 120 to 277 MultiVolt ProLine®
F48T8HO	120-277	Instant start	30176	GE286MAXP-HO-N	2 or 1- F96T8HO IS 120 to 277 "N".87 BF
F54T5/HO			74120	GETR480/277-375W	Transformer 480 to 277V, <375 Watts (VA), F can
	120-277	Programmed start	67562	GE254MVPS90-A	2 or 1 - F54T5HO 120 to 277 UltraStart® PS High Temp F Can
	120-277	Programmed start	33957	GE254MVPS-D-1	2 or 1 - F54T5HO 120 to 277 UltraStart® PRS D Can
F54T5/WM	120-277	Programmed start	67562	GE254MVPS90-A	2 or 1 - F54T5HO 120 to 277 UltraStart® PS High Temp F Can
	120-277	Programmed start	33957	GE254MVPS-D-1	2 or 1 - F54T5HO 120 to 277 UltraStart® PRS D Can
F58T8	120-277	Programmed start	67562	GE254MVPS90-A	2 or 1 - F54T5HO 120 to 277 UltraStart® PS High Temp F Can
	120-277	Programmed start	33957	GE254MVPS-D-1	2 or 1 - F54T5HO 120 to 277 UltraStart® PRS D Can
	120-277	Instant start	30176	GE286MAXP-HO-N	2 or 1- F96T8HO IS 120 to 277 "N".87 BF
F60T12	120-277	Instant start	74474	GE260IS-MV-N	2 or 1- F96T12 Instant Start 120 to 277
F60T12/HO	120-277	Rapid start	75671	GE296HO-MV-N	2 or 1- F96T12HO RS 120 to 277 MultiVolt ProLine®
F60T8HO	120-277	Instant start	30176	GE-286-HO-MV-N	2 or 1- F96T8HO IS 120 to 277 "N".87 BF
F64T12	120-277	Instant start	74474	GE260IS-MV-N	2 or 1- F96T12 Instant Start 120 to 277
F70T8	120-277	Rapid start	75671	GE296HO-MV-N	2 or 1- F96T12HO RS 120 to 277 MultiVolt ProLine®
F72T12	120-277	Instant start	74474	GE260IS-MV-N	2 or 1- F96T12 Instant Start 120 to 277
F72T12/HO	120-277	Rapid start	75671	GE296HO-MV-N	2 or 1- F96T12HO RS 120 to 277 MultiVolt ProLine®
F72T8	120-277	Instant start	73199	GE259MAXP-L/ULTRA	2 or 1- F96T8 120 to 277 "N" .87 BF UltraMax®
	120-277	Instant start	49767	GE259MAXP-N/ULTRA	2 or 1- F96T8 120 to 277 "N" .87 BF UltraMax®
F72T8HO	120-277	Instant start	30176	GE286MAXP-HO-N	2 or 1- F96T8HO IS 120 to 277 "N".87 BF
F80T5HO	120-277	Programmed start	72280	GE180MVPS-D	1 - F80T5HO 120 to 277 UltraStart® PRS D Can
F84T12	120-277	Instant start	74474	GE260IS-MV-N	2 or 1- F96T12 Instant Start 120 to 277
F8T9	120	Rapid start	97498	GE240RS120	2 F40 or F34T12 Rapid Start 120V "N" BF ProLine® T12
F96T12	120-277	Instant start	74474	GE260IS-MV-N	2 or 1- F96T12 Instant Start 120 to 277
F96T12/HO	120-277	Rapid start	75671	GE296HO-MV-N	2 or 1- F96T12HO RS 120 to 277 MultiVolt ProLine®
F96T12/WM	120-277	Instant start	74474	GE260IS-MV-N	2 or 1- F96T12 Instant Start 120 to 277
F96T12/WMP	120-277	Instant start	74474	GE260IS-MV-N	2 or 1- F96T12 Instant Start 120 to 277
F96T8	347	Instant start	74099	GE259MAX-G-N-347	2 or 1- F96T8 347V "N" .87 BF UltraMax®
	120-277	Instant start	73199	GE259MAXP-L/ULTRA	2 or 1- F96T8 120 to 277 "N" .87 BF UltraMax®
	120-277	Instant start	49767	GE259MAXP-N/ULTRA	2 or 1- F96T8 120 to 277 "N" .87 BF UltraMax®
	120-277	Instant start	74469	GE259MAX-G-N	2 or 1- F96T8 120 to 277 "N".87 BF UltraMax®
	120-277	Instant start	30176	GE286MAXP-HO-N	2 or 1- F96T8HO IS 120 to 277 "N".87 BF
F96T8/HO	120-277	Instant start	30176	GE286MAXP-HO-N	2 or 1- F96T8HO IS 120 to 277 "N".87 BF
F96T8/WM	347	Instant start	74099	GE25MAX G-N-347	2 or 1- F96T8 347V "N" .87 BF
	120-277	Instant start	73199	GE259MAXP-L/ULTRA	2 or 1- F96T8 120 to 277 "N" .87 BF UltraMax®
	120-277	Instant start	49767	GE259MAXP-N/ULTRA	2 or 1- F96T8 120 to 277 "N" .87 BF UltraMax®
	120-277	Instant start	74469	GE259MAX-G-N-347	2 or 1- F96T8 120 to 277 "N".87 BF UltraMax®
	120-277	Instant start	30176	GE286MAXP-HO-N	2 or 1- F96T8HO IS 120 to 277 "N".87 BF UltraMax®
F96T8/WMP	347	Instant start	74099	GE259MAX-G-N-347	2 or 1- F96T8 347V "N" .87 BF UltraMax®
	120-277	Instant start	73199	GE259MAXP-L/ULTRA	2 or 1- F96T8 120 to 277 "N" .87 BF UltraMax®
	120-277	Instant start	49767	GE259MAXP-N/ULTRA	2 or 1- F96T8 120 to 277 "N" .87 BF UltraMax®
	120-277	Instant start	74469	GE259MAX-G-N	2 or 1- F96T8 120 to 277 "N".87 BF UltraMax®
	120-277	Instant start	30176	GE286MAXP-HO-N	2 or 1- F96T8HO IS 120 to 277 "N".87 BF UltraMax®

See page E-1 for warranty information.

Lamp Type	Voltage	Fluorescent Ballast Type	Ballast Product Code	Ballast Description	Fluorescent Ballast Long Description
Fluorescent Lamps (continued)					
FC12T5HO	120-277	Programmed start	67562	GE254MVPS90-A	2 or 1 - F54T5HO 120 to 277 UltraStart® PS High Temp F Can
FC16T9	120-277	Programmed start	71445	GEC226-MVPS-3W	2-CFQ26W FT24 or 1-42W CFTR32 3 Way Mounting Kit 120-277V ProLine® PS
	120-277	Programmed start	71443	GEC226-MVPS-BES	2-CFQ26W FT24 or 1-42W CFTR32 Bottom Exit w Studs 120-277V ProLine® PS
	120-277	Programmed start	71444	GEC226-MVPS-SE	2-CFQ26W FT24 or 1-42W CFTR32 Side Exit 120-277V ProLine® PS
FC16T9/40W	120-277	Programmed start	71443	GEC226-MVPS-BES	2-CFQ26W FT24 or 1-42W CFTR32 Bottom Exit w Studs 120-277V ProLine® PS
	120-277	Programmed start	71444	GEC226-MVPS-SE	2-CFQ26W FT24 or 1-42W CFTR32 Side Exit 120-277V ProLine® PS
FC16T9/ FC12T9	120	Rapid start	68190	GEM1FC16T9RS120	2- FC12T9 FC16T9 FC8T9 FC12T9 120V Magnetic (726VLHWSTCP)
FC6T9	120	Rapid start	86227	GEM1FC8T9RS120IP	1- FC8T9 RS 120V Magnetic Ballast(547RSWSTCP)
FC8T9/FC12T9	120	Rapid start	89717	GEM1FC12T9RS120	2 FC12T9 RS 120V Magnetic Ballast (449LRWSTCP)
	120	Rapid start	68190	GEM1FC16T9RS120	2- FC12T9 FC16T9 FC8T9 FC12T9 120V Magnetic (726VLHWSTCP)
FE15T8	347	Instant start	74101	GE132MAX-G-N-347	1- F32T8 347V "N" .87 BF ProLine®
	347	Instant start	74109	GE232MAXP347-H	2 or 1- F32T8 347V "H" 1.18 BF UltraMax®
	347	Instant start	74103	GE232MAX-G-N-347	2 or 1- F32T8 347V "N" .87 BF UltraMax®
	347	Instant start	74111	GE332MAXP347-H	3 - F32T8 347V "H" 1.18 BF UltraMax®
	347	Instant start	74105	GE332MAX-G-N-347	3 or 2- F32T8 347V "N" .87 BF UltraMax®
	347	Instant start	74113	GE432MAXP347-H	4 - F32T8 347V "H" 1.18 BF UltraMax®
	347	Instant start	74098	GE432MAXP347-L	4 or 3- F32T8 347V "L" .77 BF UltraMax®
	347	Instant start	74095	GE432MAXP347-N	4 or 3- F32T8 347V "N" .87 BF UltraMax®
	347	Instant start	74107	GE432MAX-G-N-347	4 or 3- F32T8 347V "N" .87 BF UltraMax®
	347	Instant start	74096	GE232MAXP347-L	2 or 1- F32T8 347V "L" .77 BF UltraMax®
	347	Instant start	74093	GE232MAXP347-N	2 or 1- F32T8 347V "N" .87 BF UltraMax®
	347	Instant start	74094	GE332MAXP347-N	3 or 2- F32T8 347V "N" .87 BF UltraMax®
	120-277	Instant start	72258	GE132MAXP-L/ULTRA	1- F32T8 120 to 277 "L" .77BF UltraMax®
	120-277	Instant start	72259	GE132MAXP-N/ULTRA	1- F32T8 120 to 277"N" .87 BF UltraMax®
	120-277	Programmed start	75954	GE132-MVPS-H	1 F32T8 120V-277V High Light 1.18 BF<10% THD UltraStart®
	120-277	Programmed start	75952	GE132-MVPS-L	1 F32T8 120V-277V Low Watts .71 BF <10% THD UltraStart®
	120-277	Programmed start	75953	GE132-MVPS-N	1 F32T8 120V-277V Normal Light .88 BF<10% THD UltraStart®
	120-277	Instant start	72262	GE232MAXP-L/ULTRA	2 or 1- F32T8 120 to 277 "L" .77 BF UltraMax®
	120-277	Instant start	72266	GE232MAXP-N/ULTRA	2 or 1- F32T8 120 to 277 "N" .87 BF UltraMax®
	120-277	Instant start	71421	GE232MAXP-N+	2 or 1- F32T8 120 to 277 "N+" 1.0 BF UltraMax®
	120-277	Instant start	78619	GE332MAXP-H/ULTRA	3 or 2- F32T8 120 to 277 "H" 1.18 BF UltraMax®
	120-277	Instant start	78621	GE332MAXP-L/ULTRA	3 or 2- F32T8 120 to 277 "L" .77 BF UltraMax®
	120-277	Instant start	78623	GE332MAXP-N/ULTRA	3 or 2- F32T8 120 to 277 "N" .87 BF UltraMax®
	120-277	Instant start	71422	GE332MAXP-N+	3 or 2- F32T8 120 to 277 "N+" 1.0 BF UltraMax®
	120-277	Instant start	71723	GE432MAXP-H/ULTRA	4 or 3- F32T8 120 to 277 "H" 1.18 BF UltraMax®
	120-277	Instant start	78625	GE432MAXP-L/ULTRA	4 or 3- F32T8 120 to 277 "L" .77 BF UltraMax®
	120-277	Instant start	78627	GE432MAXP-N/ULTRA	4 or 3- F32T8 120 to 277 "N" .87 BF UltraMax®
	120-277	Instant start	71423	GE432MAXP-N+	4 or 3- F32T8 120 to 277 "N+" 1.0 BF UltraMax®
FT24W/2G10	120-277	Programmed start	68976	GE224MVPS-N	2- F24T5HO PRS UNV 50/60 Hz
	120-277	Programmed start	63097	GEC226-MVPS-3W	2-CFQ26W FT24 or 1-42W CFTR32 3 Way Mounting Kit 120-277V ProLine® PS
	120-277	Programmed start	63098	GEC226-MVPS-BES	2-CFQ26W FT24 or 1-42W CFTR32 Bottom Exit w Studs 120-277V ProLine® PS
	120-277	Programmed start	63099	GEC226-MVPS-SE	2-CFQ26W FT24 or 1-42W CFTR32 Side Exit 120-277V ProLine® PS
FT24W/4P	120-277	Programmed start	68976	GE224MVPS-N	2- F24T5HO PRS UNV 50/60 Hz
FT36W/4P	120	Rapid start	97498	GE240RS120	2 F40 or F34T12 Rapid Start 120V "N" BF ProLine® T12
	120-277	Programmed start	68976	GE224MVPS-N	2- F24T5HO PRS UNV 50/60 Hz
	120-277	Programmed start	94131	GE254MVPS-D-1	2 or 1 - F54T5HO 120 to 277 UltraStart® PRS D Can
FT39W/4P	120-277	Programmed start	47540	B239PUNV-DOG1C	2- F39T5HO PRS UNV 50/60 Hz
	120-277	Programmed start	47540	B239PUNV-DOG1C	2- F39T5HO PRS UNV 50/60 Hz
	120-277	Programmed start	67562	GE254MVPS90-A	2 or 1 - F54T5HO 120 to 277 UltraStart® PS High Temp F Can
FT50W/4P	120-277	Programmed start	67562	GE254MVPS90-A	2 or 1 - F54T5HO 120 to 277 UltraStart® PS High Temp F Can
	120-277	Programmed start	94131	GE254MVPS-D-1	2 or 1 - F54T5HO 120 to 277 UltraStart® PRS D Can
FT55W/4P	120-277	Programmed start	67562	GE254MVPS90-A	2 or 1 - F54T5HO 120 to 277 UltraStart® PS High Temp F Can
	120-277	Programmed start	94131	GE254MVPS-D-1	2 or 1 - F54T5HO 120 to 277 UltraStart® PRS D Can

See page E-1 for warranty information.

Quick reference lamp to ballast selection guide (cont.)

Lamp Type	Use with ANSI Lamp Types	Wattage	PC	New GE Description	Circuit Type	Frame Size	Voltage	Kit Capacitor		Replacement Capacitor		Replacement Ignitor
								uF	Min VAC	PC	Description	
High Intensity Discharge (HID) Lamps												
Metal Halide	M110	50	63073	GEM50MLTLA3D-5	HX-HPF	3x4	120/208/240/277	6	280	75425	GECAP-6/280V-D	MH350-1A
	M148	50	63073	GEM50MLTLA3D-5	HX-HPF	3x4	120/208/240/277	6	280	75425	GECAP-6/280V-D	MH350-1A
	M143	70	67337	GEM7048TLA3D-5	HX-HPF	3x4	120/480	8	280	75426	GECAP-8/280V-D	MH350-1A
	M143	70	86847	GEM70MLTLA3D-5	HX-HPF	3x4	120/208/240/277	8	280	75426	GECAP-8/280V-D	MH350-1A
	M143	70	78517	GEM70TRILC3-5	HX-HPF	3x4	120/277/347	8	300	75426	GECAP-8/280V-D	MH350-1A
	M85	70	86576	11210277CTC000C	HX-HPF	F-Can	120/277					
	M98	70	63047	GEMH70MVR-F	HX-HPF	F-Can	120/277					
	M98	70	67337	GEM7048TLA3D-5	HX-HPF	3x4	120/480	8	280	75426	GECAP-8/280V-D	MH350-1A
	M98	70	86847	GEM70MLTLC3D-5	HX-HPF	3x4	120/208/240/277	8	280	75426	GECAP-8/280V-D	MH350-1A
	M140	100	67333	GEM10048TLA3D-5	HX-HPF	3x4	120/480	12	280	75427	GECAP-12/280V-D	MH350-1A
	M140	100	86675	GEM100MLTLC3D-5	HX-HPF	4.25x5.75	120/208/240/277	12	280	75427	GECAP-12/280V-D	MH350-1A
	M140	100	78519	GEM100TRILC3-5	HX-HPF	3x4	120/277/347	12	300	75427	GECAP-12/280V-D	MH350-1A
	M90	100	63048	GEMH100MVR-F	HX-HPF	F-Can	120/277					
	M90	100	67333	GEM10048TLA3D-5	HX-HPF	3x4	120/480	12	280	75427	GECAP-12/280V-D	MH350-1A
	M90	100	86675	GEM100MLTLC3D-5	HX-HPF	4.25x5.75	120/208/240/277	12	280	75427	GECAP-12/280V-D	MH350-1A
	M92	100	67333	GEM10048TLA3D-5	HX-HPF	3x4	120/480	12	280	75427	GECAP-12/280V-D	MH350-1A
	M92	100	86675	GEM100MLTLC3D-5	HX-HPF	4.25x5.75	120/208/240/277	12	280	75427	GECAP-12/280V-D	MH350-1A
	M102	150	86711	GEM15048TLC3D-5	HX-HPF	3x4	120/480	16	280	75428	GECAP-16/280V-D	MH350-1A
	M102	150	86718	GEM150MLTLC3D-5	HX-HPF	3x4	120/208/240/277	16	280	75428	GECAP-16/280V-D	MH350-1A
	M102	150	78520	GEM150TRILC3-5	HX-HPF	3x4	120/277/347	16	300	75428	GECAP-16/280V-D	MH350-1A
	M107	150	86711	GEM15048TLC3D-5	HX-HPF	3x4	120/480	16	280	75428	GECAP-16/280V-D	MH350-1A
	M107	150	86718	GEM150MLTLC3D-5	HX-HPF	3x4	120/208/240/277	16	280	75428	GECAP-16/280V-D	MH350-1A
	M142	150	86711	GEM15048TLC3D-5	HX-HPF	3x4	120/480	16	280	75428	GECAP-16/280V-D	MH350-1A
	M142	150	86718	GEM150MLTLC3D-5	HX-HPF	3x4	120/208/240/277	16	280	75428	GECAP-16/280V-D	MH350-1A
	M57	175	86563	1110245SCTC000I	CWA	F-Can	120/277					
	M57	175	87210	GEM175ML5AC3-5	CWA	3x4	120/208/240/277/480	10	400	75433	GECAP-10/400V-O	N/A
	M57	175	86741	GEM175MLTAC3-5	CWA	3x4	120/208/240/277	10	400	75433	GECAP-10/400V-O	N/A
	M57	175	78521	GEM175TRIAC3-5	CWA	3x4	120/277/347	12	450			N/A
	M58	250	63050	GEMH175MVA-F	CWA	F-Can	120/277					
	M58	250	87211	GEM250ML5AC3-5	CWA	3x4	120/208/240/277/480	15	400	75434	GECAP-15/400V-O	N/A
	M58	250	87212	GEM250ML5AC4-5	CWA	4.25x4.75	120/208/240/277/480	15	400	75434	GECAP-15/400V-O	N/A
	M58	250	86765	GEM250MLTAC3-5	CWA	4.25x4.75	120/208/240/277	15	400	75434	GECAP-15/400V-O	N/A
	M58	250	78522	GEM250TRIAC4-5	CWA	3x4	120/277/347	15	450	75434	GECAP-15/400V-O	N/A
	M58	250	63051	GEMH250MVA-F	CWA	F-Can	120/277					
	M59	400	63052	GEMH4000MVA-F	CWA	F-Can	120/277					
	M59	400	86803	GEM40048TAC4-5	CWA	4.25x4.75	120/480	24	400	75435	GECAP-24/400V-O	N/A
	M59	400	72300	GEM400ML5AA4-5	CWA	4.25x4.75	120/208/240/277/480	24	400	75435	GECAP-24/400V-O	N/A
	M59	400	72149	GEM400MLTAA4-5	CWA	4.25x4.75	120/208/240/277	24	400	75435	GECAP-24/400V-O	N/A
	M59	400	78523	GEM400TRIAC4-5	CWA	4.25x4.75	120/277/347	24	450	75668	GECAP-24/480V-O	N/A
	M47	1000	63069	GEM100048TAC5-5	CWA	4.25x6.00	120/480	24	480	75668	GECAP-24/480V-O	N/A
	M47	1000	87213	GEM1000ML5AA5-5	CWA	4.25x6.00	120/208/240/277/480	24	480	75668	GECAP-24/480V-O	N/A
	M47	1000	86655	GEM1000MLTAA5-5	CWA	4.25x6.00	120/208/240/277	24	480	75668	GECAP-24/480V-O	N/A
	M47	1000	78524	GEM1000TRIAC5-5	CWA	4.25x6.00	120/277/347	24	540	75668	GECAP-24/480V-O	N/A
	M48	1500	86693	GEM150048TAC5-5	CWA	4.25x6.00	120/480	32	525	75438	GECAP-32/525V-O	N/A
	M48	1500	86698	GEM1500MLTAC5-5	CWA	4.25x6.00	120/208/240/277	32	525	75438	GECAP-32/525V-O	N/A
Pulse Start	M156	20	87490	GEMH20-MLF-120	eHID	3.7x1.6x1.0	120					Internal
	M130	39	87501	GEMH39-MSF-120	eHID	3.7x3.0x1.2	120					Internal
	C148	50	87516	GEMH50-MSF-120	eHID	3.7x3.0x1.2	120					Internal
	M110	50	87516	GEMH50-MSF-120	eHID	3.7x3.0x1.2	120					Internal
	M148	50	87516	GEMH50-MSF-120	eHID	3.7x3.0x1.2	120					Internal
	C143	70	87531	GEMH70-MSF-120	eHID	3.7x3.0x1.2	120					Internal
	C143	70	87546	GEMH70-SLJ-MV	eHID	7.3x2.6x2.2	120-277					Internal
	M139	70	87531	GEMH70-MSF-120	eHID	3.7x3.0x1.2	120					Internal
	M139	70	87531	GEMH70-MSF-120	eHID	3.7x3.0x1.2	120					Internal
	M143	70	87531	GEMH70-MSF-120	eHID	3.7x3.0x1.2	120					Internal
	M143	70	87546	GEMH70-SLJ-MV	eHID	7.3x2.6x2.2	120-277					Internal
	M98	70	87531	GEMH70-MSF-120	eHID	3.7x3.0x1.2	120					Internal
	M98	70	87546	GEMH70-SLJ-MV	eHID	7.3x2.6x2.2	120-277					Internal
	C140	100	87561	GEMH100-SLJ-MV	eHID	7.3x2.6x2.2	120-277					Internal
	M140	100	87561	GEMH100-SLJ-MV	eHID	7.3x2.6x2.2	120-277					Internal
	M90	100	87561	GEMH100-SLJ-MV	eHID	7.3x2.6x2.2	120-277					Internal
	C142	150	87576	GEMH150-SLJ-MV	eHID	7.3x2.6x2.2	120-277					Internal
	M102	150	87576	GEMH150-SLJ-MV	eHID	7.3x2.6x2.2	120-277					Internal
	M142	150	87576	GEMH150-SLJ-MV	eHID	7.3x2.6x2.2	120-277					Internal
	M137	175	86876	GEP17548TAC3-5	CWA	3x4	120/480	10	400	75433	GECAP-10/400V-O	MH350-1A
	M137	175	67335	GEP175MLTAC3-5	CWA	3x4	120/208/240/277	10	400	75433	GECAP-10/400V-O	MH350-1A
	M152	175	86876	GEP17548TAC3-5	CWA	3x4	120/480	10	400	75433	GECAP-10/400V-O	MH350-1A
	M152	175	67335	GEP175MLTAC3-5	CWA	3x4	120/208/240/277	10	400	75433	GECAP-10/400V-O	MH350-1A
	M152	175	78525	GEP175TRIAC3-5	CWA	3x4	120/277/347	12	450			MH350-1A
	M136	250	78526	GEP200TRIAC3-5	CWA	3x4	120/277/347	16	450			MH350-1A
	M138	250	67336	GEP25048TAA4-5	CWA	4.25x4.75	120/480	15	400	75434	GECAP-15/400V-O	MH350-1A

See page E-1 for warranty information.

High Intensity Discharge (HID) Lamps (continued)

Lamp Type	Use with ANSI Lamp Types	Wattage	PC	New GE Description	Circuit Type	Frame Size	Voltage	Kit Capacitor uF	Kit Capacitor Min VAC	Replacement Capacitor PC	Replacement Capacitor Description	Replacement Ignitor
Pulse Start (cont)	M138	250	67344	GEP250MLTAA4-5	CWA	4.25x4.75	120/208/240/277	15	400	75434	GECAP-15/400V-O	MH350-1A
	M138	250	78527	GEP250TRIAC4-5	CWA	4.25x4.75	120/277/347	15	450	75434	GECAP-15/400V-O	MH350-1A
	M153	250	67336	GEP25048TAA4-5	CWA	4.25x4.75	120/480	15	400	75434	GECAP-15/400V-O	
	M153	250	67344	GEP250MLTAA4-5	CWA	4.25x4.75	120/208/240/277	15	400	75434	GECAP-15/400V-O	MH350-1A
	CMH320	320	29377	GE-MH-250-400-MA	eHID		208-277					Internal
	M132	320	67342	GEP32048TAA4-5	CWA	4.25x4.75	120/480	21	345	75431	GECAP-21/345V-O	MH350-1A
	M132	320	67345	GEP320MLTAA4-5	CWA	4.25x4.75	120/208/240/277	21	345	75431	GECAP-21/345V-O	MH350-1A
	M132	320	78528	GEP320TRIAC4-5	CWA	4.25x4.75	120/277/347	21	450	75431	GECAP-21/345V-O	MH350-1A
	M154	320	67342	GEP32048TAA4-5	CWA	4.25x4.75	120/480	21	345	75431	GECAP-21/345V-O	MH350-1A
	M154	320	67345	GEP320MLTAA4-5	CWA	4.25x4.75	120/208/240/277	21	345	75431	GECAP-21/345V-O	MH350-1A
	M154	320	78528	GEP320TRIAC4-5	CWA	4.25x4.75	120/277/347	21	345	75431	GECAP-21/345V-O	MH350-1A
	M131	350	67346	GEP350MLTAA4-5	CWA	4.25x4.75	120/208/240/277	22.5	345	75432	GECAP-225/345V-O	MH350-1A
	M131	350	78529	GEP350TRIAC4-5	CWA	4.25x4.75	120/277/347	22	450			MH350-1A
	M135	400	67347	GEP400MLTAA4-5	CWA	4.25x4.75	120/480	24	400	75435	GECAP-24/400V-O	MH350-1A
	M135	400	67347	GEP400MLTAA4-5	CWA	4.25x4.75	120/208/240/277	24	400	75435	GECAP-24/400V-O	MH350-1A
	M135	400	78530	GEP400TRIAC4-5	CWA	4.25x4.75	120/277/347	26	450	75437	GECAP-26/545V-O	MH350-1A
	M155	400	67347	GEP400MLTAA4-5	CWA	4.25x4.75	120/208/240/277	24	400	75435	GECAP-24/400V-O	MH350-1A
	M155	400	67341	GEP40048TAA4-5	CWA	4.25x4.75	120/480	24	400	75435	GECAP-24/400V-O	MH350-1A
	M149	750	67343	GEP75048TAA5-5	CWA	4.25x6.00	120/480	28	400	75436	GECAP-28/400V-O	MH750-1B
	M149	750	67359	GEP750MLTAA5-5	CWA	4.25x6.00	120/208/240/277	28	400	75436	GECAP-28/400V-O	MH750-1B
	M149	750	78531	GEP750TRIAC5-5	CWA	4.25x6.00	120/277/347	28	450	75436	GECAP-28/400V-O	MH750-1B
	M141	1000	67349	GEP1000ML5AA5-5	CWA	4.25x6.00	120/208/240/277/480	24	480	75668	GECAP-24/480V-O	HPS1000-4B
	M141	1000	67348	GEP1000MLTAA5-5	CWA	4.25x6.00	120/208/240/277	24	480	75668	GECAP-24/480V-O	HPS1000-4B
	M141	1000	78532	GEP1000TRIAC5-5	CWA	4.25x6.00	120/277/347	25	450			HPS1000-4B
High Pressure Sodium	S68	50	87152	GES50MLTLC3D-5	HX-HPF	3x4	120/208/240/277	5	300	75429	GECAP-5/300V-D	HPS150-3A
	S62	70	86596	12210237CTC000I	HX-HPF	F-Can	120/277					Internal
	S62	70	86605	1233142U000I	R-HPF, R-NPF	2.81x3.94	120					Internal
	S68	70	78533	GES50TRILC3-5	HX-HPF	3x4	120/277/347	5	300			HPS150-3A
	S62	70	86456	GES7048TLC3D-5	HX-HPF	3x4	120/480	7	300	75430	GECAP-7/300V-D	HPS150-3A
	S62	70	86587	GES70MLTLC3D-5	HX-HPF	3x4	120/208/240/277	7	300	75430	GECAP-7/300V-D	HPS150-3A
	S62	70	78534	GES70TRILC3-5	HX-HPF	3x4	120/277/347	7	300	75430	GECAP-7/300V-D	HPS150-3A
	S54	100	87068	GES10048TLC3D-5	HX-HPF	3x4	120/480	10	280	75433	GECAP-10/400V-O	HPS150-3A
	S54	100	87074	GES100MLTLC3D-5	HX-HPF	3x4	120/208/240/277	10	280	75433	GECAP-10/400V-O	HPS150-3A
	S54	100	78535	GES100TRILC3-5/2	HX-HPF	3x4	120/277/347	10	300	75433	GECAP-10/400V-O	HPS150-3A
	S55	150	86606	1233154U000I	R-NPF	2.81x3.94	120					Internal
	S55	150	67339	GES15048TLA3D-5	HX-HPF	3x4	120/480	14	280	75669	GECAP-14/280V-D	HPS150-3A
	S55	150	87094	GES150MLTLC3D-5	HX-HPF	3x4	120/208/240/277	14	280	75669	GECAP-14/280V-D	HPS150-3A
	S55	150	78536	GES150TRILC3-5	HX-HPF	3x4	120/277/347	14	300	75669	GECAP-14/280V-D	HPS150-3A
	S50	250	87214	GES250ML5AC4-5	CWA	4.25x4.75	120/208/240/277/480	35	240	75422	GECAP-35/240V-O	HPS400-3A
	S50	250	87121	GES250MLTAC4-5	CWA	4.25x4.75	120/208/240/277	35	240	75422	GECAP-35/240V-O	HPS400-3A
	S50	250	78537	GES250TRIAC4-5	CWA	4.25x4.75	120/277/347	33	300			HPS400-3A
	S51	400	87198	GES40048TAC4-5	CWA	4.25x4.75	120/480	55	240	75423	GECAP-55/240V-O	HPS400-3A
	S51	400	63066	GES400ML5AA4-5	CWA	4.25x4.75	120/208/240/277/480	55	240	75423	GECAP-55/240V-O	HPS400-3A
	S51	400	87164	GES400MLTAC4-5	CWA	4.25x4.75	120/208/240/277	55	240	75423	GECAP-55/240V-O	HPS400-3A
	S51	400	78539	GES400TRIAC4-5	CWA	4.25x4.75	120/277/347	55	300	75423	GECAP-55/240V-O	HPS400-3A
	S52	1000	67351	GES100048TAA5-5	CWA	4.25x6.00	120/480	26	525	75437	GECAP-26/525V-O	HPS1000-4B
	S52	1000	87218	GES1000ML5AC5-5	CWA	4.25x6.00	120/208/240/277/480	26	525	75437	GECAP-26/525V-O	HPS1000-4B
	S52	1000	87056	GES1000MLTAC5-5	CWA	4.25x6.00	120/208/240/277	26	525	75437	GECAP-26/525V-O	HPS1000-4B
	S52	1000	78540	GES1000TRIAC5-5	CWA	4.25x6.00	120/277/347	26	540	75437	GECAP-26/525V-O	HPS1000-4B
Mercury	H39	175	63078	GEM175ML5AA3-5	CWA	3x4	120/208/240/277/480	10	400	75433	GECAP-10/400V-O	N/A
	H39	175	86741	GEM175MLTAC3-5	CWA	3x4	120/208/240/277	10	400	75433	GECAP-10/400V-O	N/A
	H37	250	87211	GEM250ML5AC3-5	CWA	3x4	120/208/240/277/480	15	400	75434	GECAP-15/400V-O	N/A
	H37	250	87212	GEM250ML5AC4-5	CWA	4.25x4.75	120/208/240/277/480	15	400	75434	GECAP-15/400V-O	N/A
	H37	250	63077	GEM250MLTAA3-5	CWA	3x4	120/208/240/277	15	400	75434	GECAP-15/400V-O	N/A
	H33	400	86803	GEM40048TAC4-5	CWA	4.25x4.75	120/480	24	400	75435	GECAP-24/400V-O	N/A
	H33	400	72300	GEM400ML5AA4-5	CWA	4.25x4.75	120/208/240/277/480	24	400	75435	GECAP-24/400V-O	N/A
	H33	400	72149	GEM400MLTAA4-5	CWA	4.25x4.75	120/208/240/277	24	400	75435	GECAP-24/400V-O	N/A
	H36	1000	63059	GEM100048TAA5-5	CWA	4.25x6.00	120/480	24	480	75668	GECAP-24/480V-O	N/A
	H36	1000	87213	GEM1000ML5AC5-5	CWA	4.25x6.00	120/208/240/277/480	24	480	75668	GECAP-24/480V-O	N/A
	H36	1000	86655	GEM1000MLTAC5-5	CWA	4.25x6.00	120/208/240/277	24	480	75668	GECAP-24/480V-O	N/A

See page E-1 for warranty information.

Notes

See page E-1 for warranty information.

Quick reference ballast selection guide

	Std Pack Prod Code	Description	Application	Product Page Number	Pallet Pack	DIY Pack	Std Pack Units Per Carton
T8 Fluorescent Ballasts							
T8 INSTANT START BALLASTS							
UltraMax® Professional Series Instant Start Multi-Voltage 120-277V High-Efficiency							
For F17 (2 ft), F25 (3 ft), F32 (4 ft), F40 (5 ft) Lamps							
	72258	GE132MAXP-L/ULTRA	1 – F32T8 120 to 277 "L" .77 BF UltraMax® P	10-7			10
	72259	GE132MAXP-N/ULTRA	1 – F32T8 120 to 277 "N" .87 BF UltraMax® P	10-8			10
	63885	GE132MAXP-H/ULTRA	1 – F32T8 120 to 277 "H" 1.18 BF UltraMax® P	10-9			10
	73190	GE232MAXP-H/ULTRA	2 or 1 – F32T8 120 to 277 "H" 1.18 BF UltraMax® P	10-10	73191		10
	72262	GE232MAXP-L/ULTRA	2 or 1 – F32T8 120 to 277 "L" .77 BF UltraMax® P	10-11	72263		10
	72266	GE232MAXP-N/ULTRA	2 or 1 – F32T8 120 to 277 "N" .87 BF UltraMax® P	10-12	72267		10
	71421	GE232MAXP-N+	2 or 1 – F32T8 120 to 277 "N+" 1.0 BF UltraMax® P	10-13			10
	78619	GE332MAXP-H/ULTRA	3 or 2 – F32T8 120 to 277 "H" 1.18 BF UltraMax® P	10-14	78620		10
	78621	GE332MAXP-L/ULTRA	3 or 2 – F32T8 120 to 277 "L" .77 BF UltraMax® P	10-15			10
	78623	GE332MAXP-N/ULTRA	3 or 2 – F32T8 120 to 277 "N" .87 BF UltraMax® P	10-16		71722	10
	71422	GE332MAXP-N+	3 or 2 – F32T8 120 to 277 "N+" 1.0 BF UltraMax® P	10-17			10
	71723	GE432MAXP-H/ULTRA	4 or 3 – F32T8 120 to 277 "H" 1.18 BF UltraMax® P	10-18	71724		10
	78625	GE432MAXP-L/ULTRA	4 or 3 – F32T8 120 to 277 "L" .77 BF UltraMax® P	10-19			10
	78627	GE432MAXP-N/ULTRA	4 or 3 – F32T8 120 to 277 "N" .87 BF UltraMax® P	10-20		71730	10
	71423	GE432MAXP-N+	4 or 3 – F32T8 120 to 277 "N+" 1.0 BF UltraMax® P	10-21			10
	74117	GE632MAXP-H90	6 or 5 – F32T8 120 to 277 "H" 1.18 BF UltraMax® P	10-22			10
For 46–59W 4 ft – 8 ft Slimline Lamps							
	49767	GE259MAXP-N/ULTRA	2 or 1 – F96T8 120 to 277 "N" .87 BF UltraMax® P	10-23		23954	10
	73199	GE259MAXP-L/ULTRA	2 or 1 – F96T8 120 to 277 "L" .77 BF UltraMax® P	10-24			10
UltraMax® Professional Series MultiVolt High Output 120–277V							
For 44-86W 4 ft - 8 ft HO Lamps							
	63888	GE286MAXP-HO-N	2 or 1 – F96T8HO IS 120 to 277 "N" 0.87 BF	10-25			10
UltraMax® Professional Series 347V High-Efficiency							
	74093	GE232MAXP347-N	2 or 1 – F32T8 347V "N" .87 BF UltraMax® P	10-26			10
	67435	GE232MAXP347-N+	2 or 1 – F32T8 347V "N+" 1.0 BF UltraMax® P	10-27			10
	74094	GE332MAXP347-N	3 or 2 – F32T8 347V "N" .87 BF UltraMax® P	10-28			10
	74095	GE432MAXP347-N	4 or 3 – F32T8 347V "N" .87 BF UltraMax® P	10-29			10
	74096	GE232MAXP347-L	2 or 1 – F32T8 347V "L" .77 BF UltraMax® P	10-30			10
	74097	GE332MAXP347-L	3 or 2 – F32T8 347V "L" .77 BF UltraMax® P	10-31			10
	74098	GE432MAXP347-L	4 or 3 – F32T8 347V "L" .77 BF UltraMax® P	10-32			10
	74109	GE232MAXP347-H	2 or 1 – F32T8 347V "H" 1.18 BF UltraMax® P	10-33			10
	74111	GE332MAXP347-H	3 or 2 – F32T8 347V "H" 1.18 BF UltraMax® P	10-34			10
	74113	GE432MAXP347-H	4 or 3 – F32T8 347V "H" 1.18 BF UltraMax® P	10-35			10
UltraMax® Professional Series 480V High-Efficiency							
	62718	GE232MAXP480-H	2 or 1 – F32T8 480V "H" 1.18 BF UltraMax® P	10-36			10
	62719	GE332MAXP480-H	3 or 2 – F32T8 480V "H" 1.18 BF UltraMax® P	10-37			10
	62720	GE432MAXP480-H	4 or 3 – F32T8 480V "H" 1.18 BF UltraMax® P	10-38			10
UltraMax® General Series T8 Multi-Voltage 120–277V							
For F17 (2 ft), F25 (3 ft), F32 (4 ft), F40 (5 ft) Lamps							
	72269	GE132MAX-G-N	1 – F32T8 120 to 277 "N" .87 BF Mulivolt UltraMax® G	10-39	72270		10
	74803	GE232MAX-G-H	2 or 1 – F32T8 120 to 277 "H" 1.18 BF Multivolt UltraMax® G	10-40	74804		10
	72273	GE232MAX-G-L	2 or 1 – F32T8 120 to 277 "L" .77 BF Multivolt UltraMax® G	10-41			10
	72275	GE232MAX-G-N	2 or 1 – F32T8 120 to 277 "N" .87 BF Multivolt UltraMax® G	10-42	72276	93883	10
	74461	GE332MAX-G-H	3 or 2 – F32T8 120 to 277 "H" 1.15 BF Multivolt UltraMax® G	10-43	74462		10
	74459	GE332MAX-G-L	3 or 2 – F32T8 120 to 277 "L" .77 BF Multivolt UltraMax® G	10-44			10
	74456	GE332MAX-G-N	3 or 2 – F32T8 120 to 277 "N" .87 BF Multivolt UltraMax® G	10-45	74457	93869	10
	67911	GE432MAX-G-H	4 or 3 – F32T8 120 to 277 "H" 1.18 BF Multivolt UltraMax® G	10-46			10
	74466	GE432MAX-G-L	4 or 3 – F32T8 120 to 277 "L" .77 BF Multivolt UltraMax® G	10-47			10
	74463	GE432MAX-G-N	4 or 3 – F32T8 120 to 277 "N" .87 BF Multivolt UltraMax® G	10-48	74464	93868	10
For 46–59W 4 ft – 8 ft Slimline Lamps							
	72271	GE159MAX-G-N	1 – F96T8 120 to 277 "N" .87 BF UltraMax® G	10-49	72272		10
	74469	GE259MAX-G-N	2 or 1 – F96T8 120 to 277 "N" .87 BF UltraMax® G	10-50	74470	93879	10

See page E-1 for warranty information.

Quick reference ballast selection guide (cont.)

	Std Pack Prod Code	Description	Application	Product Page Number	Pallet Pack	DIY Pack	Std Pack Units Per Carton
T8 Fluorescent Ballasts (continued)							
T8 INSTANT START BALLASTS (continued)							
UltraMax® General Series 347V Instant Start High Performance							
	74101	GE132MAX-G-347	1 – F32T8 347V "N" 0.87 BF UltraMax® G	10-51			10
	74103	GE232MAX-G-347	2 or 1 – F32T8 347V "N" 0.87 BF UltraMax® G	10-52			10
	74105	GE332MAX-G-347	3 or 2 – F32T8 347V "N" 0.87 BF UltraMax® G	10-53			10
	74107	GE432MAX-G-347	4 or 3 – F32T8 347V "N" 0.87 BF UltraMax® G	10-54			10
	74099	GE259MAX-G-347	2 or 1 – F96T8 347V "N" 0.87 BF UltraMax® G	10-55	74100		10
ProLine® T8 Instant Start 120V and 277V High Performance							
For F17 (2 ft), F25 (3 ft), F32 (4 ft), F40 (5 ft) Lamps							
	23673	GE-332-120-N	3 or 2 – F32T8 120V "N" .87 BF ProLine®	10-56	24165		10
For 46–59W 4 ft – 8 ft Slimline Lamps							
	23677	GE-259-120-N	2 or 1 – F96T8 120V Normal Light .87 BF ProLine®	10-57			10
Residential Grade ProLine® T8 120V							
For F17 (2 ft), F25 (3 ft), F32 (4 ft) Lamps							
	97782	GE232-120-RES	2 or 1 – F32T8 120V "N" .87 BF Residential ProLine®	10-58		93884	10
	97783	GE432-120-RES	4 or 3 – F32T8 120V "N" .87 BF Residential ProLine®	10-59		93885	10
ELECTROMAGNETIC T8 120V AND 277V BALLASTS							
For F17 (2 ft), F25 (3 ft), F32 (4 ft) Lamps							
	87125	GEM232T8RS120	2 – F32T8 RS 120V Magnetic Ballast (M232SR120C)	10-60		87125	10
T8 PROGRAMMED START BALLASTS							
UltraStart® T8 120V–277V Programmed Start							
For F17 (2 ft), F25 (3 ft), F32 (4 ft) Lamps							
	75952	GE132-MVPS-L	1 F32T8 120V-277V Low Watts .71 BF <10% THD UltraStart®	11-2			10
	75953	GE132-MVPS-N	1 F32T8 120V-277V Normal Light .88 BF <10% THD UltraStart®	11-3			10
	75954	GE132-MVPS-H	1 F32T8 120V-277V High Light 1.18 BF <10% THD UltraStart®	11-4			10
	96714	GE232-MVPS-N	2 or 1 – F32T8 120V-277V Normal Light .88 BF <10% THD UltraStart®	11-5			10
	96720	GE232-MVPS-L	2 or 1 – F32T8 120V-277V Low Watts .71 BF <10% THD UltraStart®	11-5			10
	29675	GE-232-MVPS-H	2 – F32T8 120V-277V High Light 1.15 BF <10% THD UltraStart®	11-6	29651		10
	29671	GE-232-MVPS-XL	2 – F32T8 120V-277V Ultra Low Watt .60 BF <10% THD	11-7			10
	29676	GE-332-MVPS-H	3 – F32T8 120V-277V High Light 1.15 BF <10% THD UltraStart®	11-8			10
	96715	GE332-MVPS-N	3 – F32T8 120V-277V Normal Light .88 BF <10% THD UltraStart®	11-9			10
	96721	GE332-MVPS-L	3 – F32T8 120V-277V Low Watts .71 BF <10% THD UltraStart®	11-9			10
	29672	GE-332-MVPS-XL	3 – F32T8 120V-277V Ultra Low Watt .60 BF <10% THD	11-10			10
	29625	GE-432-120-PS-N	4 – F32T8 120V Normal Light .87 BF <10% THD UltraStart®	11-10	29635		10
	96716	GE432-MVPS-N	4 – F32T8 120V-277V Normal Light .88 BF <10% THD UltraStart®	11-11			10
	71832	GE432-MVPS-L	4 – F32T8 120V-277V Low Watts .71 BF <10% THD UltraStart®	11-11			10
	74476	GE-432-MVPS-H	4 – F32T8 120V-277V High Light 1.15 BF <10% THD Ultra-Start®	11-12	74477		8
	62721	GE232PS347-L	2 or 1 F32T8 347V Low Watt .71 BF UltraStart®	11-13			10
	62722	GE432PS347-L	4 or 3 F32T8 347V Low Watt .71 BF UltraStart®	11-14			10
	62723	GE232PS347-N	2 or 1 F32T8 347V Normal Light .88 BF UltraStart®	11-15			10
	62724	GE332PS347-N	3 F32T8 347V Normal Light .88 BF UltraStart®	11-16			10
	62725	GE432PS347-N	4 F32T8 347V Normal Light .88 BF UltraStart®	11-17			10
	62726	GE232PS347-H	2 or 1 F32T8 347V High Light 1.18 BF UltraStart®	11-18			10
	62727	GE332PS347-H	3 F32T8 347V High Light 1.18 BF UltraStart®	11-19			10
	63041	GE332PS347-L	2 or 1 F32T8 347V High Light 1.18 BF UltraStart®	11-20			10

See page E-1 for warranty information.

	Std Pack Prod Code	Description	Application	Product Page Number	Pallet Pack	DIY Pack	Std Pack Units Per Carton
T8 Fluorescent Ballasts (continued)							
T8/T5 DIMMING BALLASTS							
UltraStart® T8 Step Dimming Program Start Dimming							
	68966	GE132-MVPS-N-S30	1 F32T8 120-277V "N" .88 BF UltraStart® 100/30% Bi-level Switching	12-5			10
	68968	GE232-MVPS-L-S30	2 or 1 F32T8 120-277V "L" .78 BF UltraStart® 100/30% Bi-level Switching	12-6			10
	68967	GE232-MVPS-N-S30	2 or 1 F32T8 120-277V "N" .88 BF UltraStart® 100/30% Bi-level Switching	12-7			10
UltraMax® Bi-Level Dimming & Load Shed Dimming Instant Start High-Efficiency							
	73233	GE232MAX90-S60	2 or 1 - F32T8 120 to 277 "H" 1.18 BF UltraMax® 100/60% step dim	12-8			10
	73231	GE332MAX90-S60	3 - F32T8 120 to 277 "H" 1.18 BF UltraMax® 100/60% step dim	12-9			10
	73229	GE432MAX90-S60	4 - F32T8 120 to 277 "H" 1.18 BF UltraMax® 100/60% step dim	12-10			10
	71497	GE632MAX-H90-S60	6, 5, 4 - F32T8 120 to 277 "H" 1.18 BF UltraMax® 100/60% step dim	12-11			10
	73234	GE232MAX90-V60	2 or 1 - F32T8 120 to 277 "H" 1.18 BF UltraMax® 0-10V 100-60% dim	12-12			10
	73232	GE332MAX90-V60	3 - F32T8 120 to 277 "H" 1.18 BF UltraMax® 0-10V 100-60% dim	12-13			10
	73230	GE432MAX90-V60	4 - F32T8 120 to 277 "H" 1.18 BF UltraMax® 0-10V 100-60% dim	12-14			10
	71731	GE632MAX-H90-V60	6 or 5 - F32T8 120 to 277 "H" 1.18 BF UltraMax® 0-10V 100-60% dim	12-15			10
UltraStart® T8 100-3% 0–10V / 120–277V Programmed Start Dimming							
	75379	GE132MVPS-N-V03	1 - F32T8 120-277V "N" .88 BF UltraStart® 0-10V Dimming 100-3%	12-16			10
	75380	GE232MVPS-N-V03	2 - F32T8 120-277V "N" .88 BF UltraStart® 0-10V Dimming 100-3%	12-17			10
	75381	GE332MVPS-N-V03	3 - F32T8 120-277V "N" .88 BF UltraStart® 0-10V Dimming 100-3%	12-18			10
	75382	GE432-MVPS-N-V03	4 - F32T8 120-277V "N" .88 BF UltraStart® 0-10V Dimming 100-3%	12-19			10
	75383	GE232-MVPS-H-V03	2 or 1 - F32T8 120-277V "H" 1.18 BF UltraStart® 0-10V Dimming 100-3%	12-20			10
	75384	GE332MVPS-H-V03	3 - F32T8 120-277V "H" 1.18 BF UltraStart® 0-10V Dimming 100-3%	12-21			10
	75385	GE432-MVPS-H-V03	4 - F32T8 120-277V "H" 1.18 BF UltraStart® 0-10V Dimming 100-3%	12-22			10
	62044	GE432MVPS-N-V03W	3 - F32T8 120-277V "N" .88 BF UltraStart® 0-10V Dimming 100-3%	12-23			10
UltraStart® T5 120–277V Step Dimming Program Start							
	90903	GE228MVPS-N-S35	2 or 1 F28T5HE Lamps	12-24			10
	90904	GE224MVPS-N-S35	2 or 1 F24T5HO Lamps	12-25			10

See page E-1 for warranty information.

Quick reference ballast selection guide (cont.)

	Std Pack Prod Code	Description	Application	Product Page Number	Pallet Pack	DIY Pack	Std Pack Units Per Carton
T5 Fluorescent Ballasts							
T5 ELECTRONIC PROGRAMMED START BALLASTS							
T5 High Efficiency – Rapid Start 120V Residential Ballast							
For F13T5, F14T5, F21T5 and F28T5							
	78518	GE21T5-120-RES	Electronic ballast for (1) F21T5; or (1) F14T5; or (1) F13T5	13-3			
	78811	GE28T5-120-RES	Electronic ballast for (1) F28T5; or (1) F21T5; or (1) F14T5	13-3			
	80021	GE28T5/2-120-RES	Electronic ballast for (2) F28T5; or (2) F21T5; or (2) F14T5	13-3			
T5 High Efficiency Programmed Start							
For F14 (2 ft), F21 (3 ft), F28 (4 ft), F35 (5 ft) HE T5 Lamps							
	68994	GE228MVPS-MC-H	2 – F21-F28T5HE, 120 to 277 UltraStart® PRS High Light 1.15 BF A Can	13-4			10
	68993	GE228MVPS-MC	2 or 1 – F14-F28T5HE, 120 – 277 UltraStart® PRS Normal Light - .95 BF A Can	13-4			10
T5 High Output Programmed Start							
For HO T5 Lamps							
	68976	GE224MVPS-N	2 – F24T5HO PRS UNV 50/60 Hz C Can	13-5			10
	47540	B239PUNV-DOG1C	2 – F39T5HO PRS UNV 50/60 Hz D Can	13-5			10
	67562	GE254MVPS90-A	2 or 1 – F54T5HO 120 to 277 UltraStart® PRS High Temp A Can	13-6			10
	33957	GE254MVPS-D-1	2 or 1 – F54T5HO 120 to 277V UltraStart® PRS High Temp D Can	13-7			10
	94131	GE454MVPS90-E-S	4/2 – F54T5HO 120 to 277 UltraStart® PRS High Temp E Can	13-8			10
	67566	GE454MVPS90-F	4-1 – F54T5HO 120 to 277 UltraStart® PS F Can	13-9			
	72280	GE180MVPS-D	1 – F80T5HO 120 to 277 UltraStart® PRS D Can	13-10			10
	62728	GE254PS347/480-F	2 or 1 – F54T5HO 347 to 480V PS High Temp F Can LFL	13-11			10
	62729	GE254PS347-F	2 or 1 – F54T5HO 347V F Can LFL	13-12			10
	62730	GE454PS347/480-E	4-1 - F54T5HO 347 to 480V High Temp E Can LFL	13-13			8
	62731	GE454PS347-E	4-1 - F54T5HO 347V LFL E Can	13-14			8
T5 lamp lengths are noted to nearest foot and are not exact lengths as noted in feet. See GE Lamp Catalog for exact lamp length.							
Step Down Transformers from 480V to Universal Voltage Ballasts							
	74119	GETR480/277-250W	Non-Isolated Autotransformer 480 to 277V, <250 Watts (VA), A can	13-15			10
	74120	GETR480/277-375W	Non-Isolated Autotransformer 480 to 277V, <375 Watts (VA), F can	13-15			10
	85857	GETR277/120-175W	Non-Isolated Autotransformer 277 to 120V, <175 Watts (VA), A Can	13-16			6
	90896	GETR347/277-375W	Non-Isolated Autotransformer 347 to 277V, <375 Watts (VA), F Can	13-16			6
T12 Fluorescent Ballasts							
T12 ELECTRONIC BALLASTS							
ProLine® T12							
For F20 (2 ft), F30 (3 ft), and F34/F40 (4 ft) T12 Lamps							
	74472	GE240PS-MV-N	2 or 1 – F40 or F34T12 Rapid Start 120 to 277 "N" BF ProLine® T12	14-3		74473	Std. Pack
For T12 4 ft – 8 ft Slimline Lamps							
	74474	GE-260IS-MV-N	2 or 1 – F96T12 Instant Start 120 to 277	14-4		74475	10
T12 HIGH OUTPUT							
	35727	GE296HO-MVPS-N	2 or 1 – F96T12 HO RS 120 to 277 Multivolt ProLine®	14-5		72109	Std. Pack

See page E-1 for warranty information.

	Std Pack Prod Code	Description	Application	Product Page Number	Pallet Pack	DIY Pack	Std Pack Units Per Carton
Magnetic Ballasts							
For Preheat T12 and T8 Lamps, Circleline T9, Straight T12 and T8 Lamps and 2 Pin CFL Lamps							
	68186	GEM120PH120DIY	1 – F20T12, F15T8, F1512, F14T8, F18T8, 120V Magnetic Ballast (200H2)	15-2		68186	
	68187	GEM120TC120DIY	1 – F20T12, F15T8, F15T12, F14T12, 120V, Magnetic Ballast (546BTCP)	15-2		68187	
	68190	GEM1FC16T9RS120	2 – FC12T9, FC16T9, FC8T9, FC12T9, 120V, Magnetic (726VLHWSTCP)	15-3		68190	
	68193	GEM1FC8T9RS120IP	1 – FC8T9, FC6T9, RS, 120V, Magnetic Ballast (547RSWSTCP)	15-4		68193	IP Pack
	68191	GEM1FC8T9RS120DI	1 – FC89T, RS, 120V Magnetic Ballast (547RSWSTCP)	15-4		68191	IP Pack
	68192	GEM220TS120DIY	2– F20T12, F15T8, F15T12, F14T12, 120V, Magnetic Ballast (447LRVLHTCP)	15-5		68192	
	68188	GEM1CF13PH120	120V Magnetic Ballast For one 2 Pin 13W CFL Lamp	15-5		68188	IP Pack
FLUORESCENT ACCESSORIES							
Starters							
	64818	FS-2-C/TP	Starters for 14, 15 & 20 Watt Flu. Lamps	15-6			6
	64819	FS-4-C/TP	Starters for 30 & 40 Watt Flu. Lamps	15-6			6
	64820	FS-25-C/TP	Starters for 22 & 25 Watt Flu. Lamps	15-6			6
	64821	FS-5-C/TP	Starters for 4, 6 & 8 Watt Flu. Lamps	15-6			6
Sockets							
	64822	BP-LP/TP	Low Profile Socket Set for Bi-Pin Flu. Lamps	15-6			7
	64823	BP/TP	Socket Set for Bi-Pin Flu. Lamps	15-6			7
	64824	BP-FM/TP	Face Mount Socket Set for Bi-Pin Flu. Lamps	15-6			7
	64825	SL-SS/TP	Socket Set for Slimline Flu. Lamps	15-6			3
Sign Ballasts							
For T12 High Output Lamps							
	72103	GESB-0412-12-IP	T12HO Sign ballast, 4 to 12 ft, 1 to 2 lamps	16-3			10
	72104	GESB-0620-24-IP	T12HO Sign ballast 6 to 20 ft, 2 to 4 lamps	16-3			10
	72105	GESB-1224-24-IP	T12HO Sign ballast 12 to 24 ft, 2 to 4 lamps	16-4			10
	72106	GESB-1240-46-IP	T12HO Sign Ballast 12 to 40 ft, 4 to 6 lamps	16-4			10
	72107	GESB-2040-24-IP	T12HO Sign Ballast 20 to 40 ft, 2 to 4 lamps	16-5			10
	72108	GESB-2448-46-IP	T12HO Sign Ballast 6 to 12 ft, 4 to 6 lamps	16-5			10
	88921	USB-0412-12-IP	4 to 12 ft, 1 to 2 lamps	16-6			10

See page E-1 for warranty information.

Quick reference ballast selection guide (cont.)

	Prod Code	Description	Application	Product Page Number				Units Per Carton
Compact Fluorescent Ballasts								
ProLine® CFL Electronic Ballasts								
For 13 – 70W T4 CFL Lamps								
	63091	GEC213-MVPS-BES	2 or 1 – CFQ13W/G24q 120-227V ProLine® PS	17-6				10
	63092	GEC213-MVPS-SE	2 or 1 – CFQ13W/G24q 120-227V ProLine® PS	17-6				10
	63089	GEC213-MVPS-3W	2 or 1 – CFQ13W/G24q 120-227V ProLine® PS	17-6				10
	63094	GEC218-MVPS-BES	2 or 1 – CFQ18W/G24q 120-227V ProLine® PS	17-7				10
	63096	GEC218-MVPS-SE	2 or 1 – CFQ18W/G24q 120-227V ProLine® PS	17-7				10
	63093	GEC218-MVPS-3W	2 or 1 – CFQ18W/G24q 120-227V ProLine® PS	17-7				10
	63098	GEC226-MVPS-BES	2 – CFQ26W, FT24 or 1 – 24W CFTR32 120-227V ProLine® PS	17-8				10
	63099	GEC226-MVPS-SE	2 – CFQ26W, FT24 or 1 – 24W CFTR32 120-227V ProLine® PS	17-8				10
	63097	GEC226-MVPS-3W	2 – CFQ26W, FT24 or 1 – 24W CFTR32 120-227V ProLine® PS	17-8				10
	63101	GEC242-MVPS-BES	2 – 42/36/32/28/26/24 watt 120-277V Proline® PS	17-9				10
	63102	GEC242-MVPS-SE	2 – 42/36/32/28/26/24 watt 120-277V Proline® PS	17-9				10
	63100	GEC242-MVPS-3W	2 – 42/36/32/28/26/24 watt 120-277V Proline® PS	17-9				10
High-Lumen UltraMax® and UltraStart® Ballasts for 40W, 28W, and 25W Biax®								
	75948	GEC140MAX-A	1 – FT40W-25W/2G11 Biax®- 120-277V UltraMax® Instant Start	17-10				10
	71435	GEC240MAX-A	2 or 1 – FT40W-25W/2G11 Biax®- 120-277V UltraMax® Instant Start	17-11				10
	71436	GEC340MAX-A	3 – FT40W-25W/2G11 Biax® - 120-277V UltraMax® Instant Start	17-12				10
	71437	GEC240MVPS-A	2 or 1 – FT40W/2G11 Biax®- 120-277V UltraStart® Programmed Start	17-13				10
	75950	GEC225MVPS-A	2 or 1 – FT25W/2G11 Biax®- 120-277V UltraStart® Programmed Start	17-13				10
CFL Magnetic Ballasts								
For 5 – 26W Preheat CFL Lamps								
	87533	GEM1CF13PH120	1 – CFT/Q13W/GX23 Preheat 120 (4111H2P)	17-14				10

See page E-1 for warranty information.

	Prod Code	Description	Application	Product Page Number	ANSI Lamp Type	Circuit Type	Units Per Carton
HID Electronic Ballasts							
For 20 – 150W Pulse Start HID Lamps							
	74115	GEMH20-MC-120	1 – 20W M156 or C156 120V Micro Electronic HID	18-5	M156	Electronic	10
	87490	GEMH20-MLF-120	1 – 20W M156 or C156 120V Electronic HID	18-5	M156	Electronic	12
	63042	GEMH20-MSJ-MV	1-20W M156/C156 120-277V Low frequency Electronic HID	18-6	C156	Electronic	10
	63043	GEMH20-MSF-MV	1-20W M156/C156 120-277V Low frequency Electronic HID	18-6	C156	Electronic	10
	63044	GEMH39-MSJ-MV	1-39W M130/C130 120-277V Low Frequency Electronic HID	18-7	C130, M130	Electronic	10
	63045	GEMH39-MSF-MV	1-39W M130/C130 120-277V Low Frequency Electronic HID	18-7	C130, M130	Electronic	10
	74116	GEMH39-MC-120	1 – 39W M130 or C130 120V Micro Electronic HID	18-8	M130	Electronic	10
	75378	GEMH39-MCM-120	1 – 39W M130 or C130 120V Micro Electronic HID Metal Can	18-8	M130	Electronic	10
	87501	GEMH39-MSF-120	1 – 39W M130 or C130 120V Electronic HID	18-9	M130	Electronic	10
	87531	GEMH70-MSF-120	1 – 70W, M98, M/C143, 120V Electronic HID	18-9	M98, M143, M139, C143, C139	Electronic	10
	94135	GEMH70-MSLF-120	1 - 70W, M98/C98, M139/C139, 120V Electronic HID	18-10	M98/C98, M139/ C139	Electronic	10
	87546	GEMH70-SLJ-MV	1 – 70W, M98, M/C143, 120V Electronic HID	18-10	M98, M143, M139, C143, C139	Electronic	10
	87561	GEMH100-SLJ-MV	1 – 100W, M90, M/C140, 120V-277V Electronic HID	18-11	M90, M140	Electronic	10
	87576	GEMH150-SLJ-MV	1 – 150W, M102, M/C142, 120V-277V Electronic HID	18-11	M102, M142	Electronic	10
HID Electromagnetic Ballasts							
Metal Halide							
For 20 – 175W Metal Halide HID Lamps							
	86824	GEM50MLTLC3D-5	1 – 50W MH M110 or M148 Quad (120/208/240/277V)	18-12	M110, M148	HX-HPF	6
	86847	GEM70MLTLC3D-5	1 – 70W MH M98 or M143 Quad (120/208/240/277V)	18-12	M98, M143	HX-HPF	6
	78517	GEM70TRILC3-5	1 – 70W MH M143 Tri Tap (120/277/347V)	18-13	M143	HX-HPF	6
	67337	GEM7048TLA3D-5/2	1 – 70W MH M98 or M143 480	18-13	M98	HX-HPF	
	86675	GEM100MLTLC3D-5	1 – 100W MH M90 or M140 Quad (120/208/240/277V)	18-14	M92, M90, M140	HX-HPF	6
	78519	GEM100TRILC3-5	1 – 100W M140 Tri Tap (120/277/347V)	18-14	M140	HX-HPF	6
	67333	GEM10048TLA3D-5/2	1 – 100W MH M90 or M140 480	18-15	M90, M140	HX-HPF	6
	86718	GEM150MLTLC3D-5	1 – 150W MH M102 or M142 Quad (120/208/240/277V)	18-15	M142, M102	HX-HPF	6
	78520	GEM150TRILC3-5	1 – 150W M102 Tri Tap (120/277/347V)	18-16	M102	HX-HPF	6
	86711	GEM15048TLC3D-5	1 – 150W MH M102 or M142 480	18-16	M102, M142	HX-HPF	6
	87210	GEM175ML5AC3-5	1 – 175W MH M57 5-Tap (120/208/240/277/480V)	18-17	M57, M109	CWA	6
	86741	GEM175MLTAC3-5	1 – 175W MH M57 Quad (120/208/240/277V)	18-17	M57, M107	CWA	6
	78521	GEM175TRIAC3-5	1 – 175W MH M57 Tri Tap (120/277/347V)	18-18	M57	CWA	6

See page E-1 for warranty information.

Quick reference ballast selection guide (cont.)

Prod Code	Description	Application	Product Page Number	ANSI Lamp Type	Circuit Type	Units Per Carton
HID Electromagnetic Ballasts (continued)						
Metal Halide (continued)						
For 250 – 1500W Metal Halide HID Lamps						
87211	GEM250ML5AC3-5	1 – 250W MH M58 5-Tap (120/208/240/277/480V)	18-19	M58	CWA	6
86765	GEM250MLTAC3-5	1 – 250W MH M58 Quad (120/208/240/277V)	18-19	M58	CWA	6
78522	GEM250TRIAC4-5	1 – 250W M58 Tri Tap (120/277/347V)	18-20	M58	CWA	6
87212	GEM250ML5AC4-5	1 – 250W MH M58 or 5-Tap (120/208/240/277/480V)	18-20	M58	CWA	3
78523	GEM400TRIAC4-5	1 – 400W M59 Tri Tap (120/277/347V)	18-21	M59	CWA	3
72300	GEM400ML5AA4-5/2	1 – 400W M59 5-Tap (120/208/240/277/480V Al C&C	18-21	M59	CWA	3
72149	GEM400MLTAA4-5	1 – 400W MH M59 Quad (120/208/240/277V) Al C&C	18-22	M59	CWA	3
63070	GEM40048TAA4 – 5/2	1 – 400W MH M59 480	18-22	M59	CWA	3
63069	GEM100048TAC5-5/2	1 – 1000W MH M47 480	18-23	M47	CWA	2
87213	GEM1000ML5AA5-5/2	1 – 1000W MH M47 5-Tap (120/208/240/277/480V)	18-23	M47	CWA	2
86655	GEM1000MLTAA5-5/2	1 – 1000W MH M47 Quad (120/208/240/277V)	18-24	M47	CWA	2
78524	GEM1000TRIAC5-5	1 – 1000W MH M47 Tri Tap (120/277/347V)	18-24	M47	CWA	2
86693	GEM150048TAC5M5-5	1 – 1500W MH M48 480	18-25	M48	CWA	2
86698	GEM1500MLTAC5-5	1 – 1500W MH M48 Quad (120/208/240/277V)	18-25	M48	CWA	2
Pulse Start						
For 175 – 1000W Pulse Start Metal Halide HID Lamps						
67335	GEP175MLTACA3-5/2	1 – 175W PS M137 or M152 Quad (120/208/240/277V)	18-26	M152, M137	Pulse Start CWA	6
78525	GEP175TRIAC3-5	1 – 175W PS M137 Tri Tap (120/277/347V)	18-26	M137	Pulse Start CWA	6
67334	GEP17548TAA3-5/2	1 – 175W PS M137 or M152 480	18-27	M152, M137	Pulse Start CWA	6
78526	GEP200TRIAC3-5	1 – 200W PS M136 Tri Tap (120/277/347V)	18-27	M136	Pulse Start CWA	6
67344	GEP250MLTAA4-5/2	1 – 250W PS M138 or M153 Quad (120/208/240/277V)	18-28	M153, M138	Pulse Start CWA	3
78527	GEP250TRIAC4-5	1 – 250W PS M138 Tri Tap (120/277/347V)	18-28	M138	Pulse Start CWA	3
67336	GEP25048TAA4-5/2	1 – 250W PS M138 or M153 480	18-29	M153, M138	Pulse Start CWA	3
67345	GEP320MLTAA4-5/2	1 – 320W PS M132 or 154 Quad (120/208/240/277V)	18-29	M154, M132	Pulse Start CWA	3
78528	GEP320TRIAC4-5	1 – 320W PS M132 Tri Tap (120/277/347V)	18-30	M132	Pulse Start CWA	6
67342	GEP32048TAC4-5/2	1 – 320W PS M132 or M154 480	18-30	M154, M132	Pulse Start CWA	3
67346	GEP350MLTAA4-5/2	1 – 350W PS M131 Quad (120/208/240/277V)	18-31	M131	Pulse Start CWA	3
78529	GEP350TRIAC4-5	1 – 350W PS M131 Tri Tap (120/277/347V)	18-31	M131	Pulse Start CWA	3
67341	GEP40048TAA4-5/2	1 – 400W PS M135 or M155 480	18-32	M155, M135	Pulse Start CWA	3
67347	GEM400MLTAA4-5/2	1 – 400W PS M59 Quad (120/208/240/277V)	18-32	M59	Pulse Start CWA	3
78530	GEP400TRIAC4-5	1 – 400W PS M135 Tri Tap (120/277/347V)	18-33	M135	Pulse Start CWA	3
67343	GEP75048TAA5-5/2	1 – 750W PS M149 480	18-33	M149	Pulse Start CWA	2
67350	GEP750MLTAA5-5/2	1 – 750W PS M149 Quad (120/208/240/277V)	18-34	M149	Pulse Start CWA	2
78531	GEP750TRIAC5-5	1 – 750W PS M149 Tri Tap (120/277/347V)	18-34	M149	Pulse Start CWA	2
67348	GEP1000MLTAA5-5/2	1 – 1000W PS M141 Quad (120/208/240/277V)	18-35	M141	Pulse Start CWA	2
78532	GEP1000TRIAC5-5	1 – 1000W PS M141 Tri Tap (120/277/347V)	18-35	M141	Pulse Start CWA	2
67349	GEP1000ML5AA5-5/2	1 – 1000W PS M141 5-Tap (120/208/240/277/480V)	18-36	M141	Pulse Start CWA	2

See page E-1 for warranty information.

	Prod Code	Description	Application	Product Page Number	ANSI Lamp Type	Circuit Type	Units Per Carton
HID Electromagnetic Ballasts (continued)							
High Pressure Sodium							
For 50 – 150W High Pressure Sodium HID Lamps							
	87152	GES50MLTLC3D-5	1 – 50W HPS S68 Quad (120/208/240/277V)	18-37	S68	HX-HPF	6
	78533	GES50TRILC3-5	1 – 50W HPS S68 Tri Tap (120/277/347V)	18-37	S68	HX-HPF	2
	86587	GES70MLTLA3D-5	1 – 70W HPS S62 Quad (120/208/240/277V)	18-38	S62	HX-HPF	6
	78534	GES70TRILC3-5	1 – 70W HPS S62 Tri Tap (120/277/347V)	18-38	S62	HX-HPF	2
	67340	GES7048TLA3D-5/2	1 – 70W HPS S62 480V	18-39	S62	HX-HPF	6
	87074	GES100MLTLC3D-5	1 – 100W HPS S54 Quad (120/208/240/277V)	18-39	S54	HX-HPF	6
	78535	GES100TRILC3-5	1 – 100W HPS S54 Tri Tap (120/277/347V)	18-40	S54	HX-HPF	6
	67338	GES10048TLA3D-5/2	1 – 100W HPS S54 480V	18-40	S54	HX-HPF	6
	87094	GES150MLTLC3D-5	1 – 150W HPS S55 Quad (120/208/240/277V)	18-41	S55	HX-HPF	6
	78536	GES150TRILC3-5	1 – 150W HPS S55 Tri Tap (120/277/347V)	18-41	S55	HX-HPF	6
	67339	GES15048TLA3D-5/2	1 – 150W HPS S55 480V	18-42	S55	HX-HPF	6
For 250 – 1000W High Pressure Sodium HID Lamps							
	87214	GES250ML5AA4-5	1 – 250W HPS S50 5-Tap (120/208/240/277/480V)	18-43	S50	CWA	3
	87121	GES250MLTAC4-5	1 – 250W HPS S50 Quad (120/208/240/277V)	18-43	S50	CWA	3
	78537	GES250TRIAC4-5	1 – 250W HPS S50 Tri Tap (120/277/347V)	18-44	S50	CWA	3
	63066	GES400ML5AA4-5	1 – 400W HPS S51 5-Tap (120/208/240/277/480V)	18-44	S51	CWA	3
	87164	GES400MLTAC4-5	1 – 400W HPS S51 Quad (120/208/240/277V)	18-45	S51	CWA	3
	78539	GES400TRIAC4-5	1 – 400W HPS S51 Tri Tap (120/277/347V)	18-45	S51	CWA	3
	87198	GES40048TAC4-5	1 – 400W HPS S51 480V in smaller frame	18-46	S51	CWA	3
	67351	GES100048TAA5-5/2	1 – 1000W HPS S52 480V	18-46	S52	CWA	2
	87218	GES1000ML5AA5-5	1 – 1000W HPS S52 5-Tap (120/208/240/277/480V)	18-47	S52	CWA	2
	67352	GES1000MLTAA5-5/2	1 – 1000W HPS S52 Quad (120/208/240/277V)	18-47	S52	CWA	2
	78540	GES1000TRIAC5-5	1 – 1000W HPS S52 Tri Tap (120/277/347V)	18-48	S52	CWA	2
High Intensity Discharge Lamp and Ballast Kits							
	71701	GEM175ML5AC3-55	1 – 175W MH M57 5-Tap (120/208/240/277/480V) Lamp & Ballast Kit (-55)	18-49	M57, M109	CWA	6
	71702	GEM250ML5AC3-55	1 – 250W MH M58 5-Tap (120/208/240/277/480V) Lamp & Ballast Kit (-55)	18-49	M58	CWA	6
	71703	GEM400ML5AC4-55	1 – 400W MH M59 5-Tap (120/208/240/277/480V) Lamp & Ballast Kit (-55)	18-50	M59	CWA	3
	71704	GEM1000ML5AC4-55	1 – 1000W MH M47 5-Tap (120/208/240/277/480V) Lamp & Ballast Kit (-55)	18-50	M47	CWA	2
	71705	GES100MLTLC3D-55	1 – 100W HPS S54 Quad (120/208/240/277V) Lamp & Ballast Kit (-55)	18-51	S54	HX-HPF	6
	71706	GES250ML5AC4-55	1 – 250W HPS S50 5-Tap (120/208/240/277/480V) Lamp & Ballast Kit (-55)	18-51	S50	CWA	3
	71707	GES400ML5AC4-55	1 – 400W HPS S51 5-Tap (120/208/240/277/480V) Lamp & Ballast Kit (-55)	18-52	S51	CWA	3

See page E-1 for warranty information.

Quick reference ballast selection guide (cont.)

	Prod Code	Description	Application	Product Page Number	ANSI Lamp Type	Circuit Type	Units Per Carton
HID Electromagnetic Ballasts (continued)							
HID Metal Halide F-Can							
	86576	11210277CTC000C	1 – 70W M85 120/277 Enclosed & Potted F-Can	18-53	M85	HX-HPF	4
	63047	GEM70MVR-F	1 – 70W M98 120/277 Enclosed & Potted F-Can	18-53	M98	HX-HPF	4
	63048	GEMH100MVR-F	1 – 100W M90 120/277 Enclosed & Potted F-Can	18-54	M90	HX-HPF	4
	63049	GEMH150MVR-F	1 – 150W MH 120/277 Enclosed & Potted F-Can	18-54	M102	HX-HPF	2
	63050	GEMH175MVA-F	1 – 175W M57 120/277 Enclosed & Potted F-Can	18-55	M57, H39	CWA	2
	63051	GEMH250MVA-F	1 – 250W M58 120/277 Enclosed & Potted F-Can	18-55	M58, H37	CWA	2
	63052	GEMH400MVA-F	1 – 400W M59 120/277 Enclosed & Potted F-Can	18-56	M59, H39	CWA	2
	80728	1111-247SCTC000I	1 – 400W M59 120/277 Enclosed & Potted F-Can	18-56	M59, H33	CWA	4
HID - High Pressure Sodium F-Can							
	86596	12210237CTC000I	1 – 70W S62 120/277 E & P F-Can built-in starter	18-57	S62	HX-HPF	4
HID - High Pressure Sodium Reactor							
	86605	1233142U000I	1 – 70W S62 120 Reactor-NPF	18-58	S62	R-HPF, R-NPF	6
	86606	1233154U000I	1 – 150W S55 120 Reactor-NPF	18-58	S55	R-NPF	6
HID ACCESSORIES							
Replacement Ignitors for Pulse Start Lamps – (MH and HPS)							
	75440	MH100-3A MH350-1A	Ignitor for MH 30 50 70 100 Ignitor MH 150W, PS 175 250 320 350 400W	18-59			20
	75441	MH750-1B	Ignitor MH PS 750W	18-59			
	86635	HPS150-3A	Ignitor HPS 150 watts or less except 150W-S56	18-59			20
	86641	HPS400-3A	Ignitor HPS 200-400 watts & 150W S56	18-59			10
	75439	HPS1000-4B	Ignitor HPS 1000W, PS 1000W	18-59			
Other Accessories							
	47621	000-8724	HIDP Adjustable Mounting Bracket Hardware Kit	18-59			100
REPLACEMENT CAPACITORS							
	75433	005-1184-MF	10.0 MFD 400V 90C 2.4 MEG 1.50 oval 2.7 ht	18-59			20
	75668	005-2779-MF	24.0 MFD 480V 90C 1.75 oval 3.9 ht	18-59			20
	75429	GECAP-5/300V-D	Capacitor 5MFD 280V Dry	18-59			20
	75425	GECAP-6/280V-D	Capacitor 6MFD 280V Dry	18-59			20
	75430	GECAP-7/300V-D	Capacitor 7MFD 300V Dry	18-59			20
	75426	GECAP-8/280V-D	Capacitor 8MFD 280V Dry	18-59			20
	75433	GECAP-10/400V-O	Capacitor 10MFD 400V Oil	18-59			20
	75427	GECAP-12/280V-D	Capacitor 12MFD 280V Dry	18-59			20
	75669	GECAP-14/280V-D	Capacitor 14MFD 280V Dry	18-59			20
	75434	GECAP-15/400V-O	Capacitor 15MFD 400V Oil	18-59			20
	75428	GECAP-16/280V-D	Capacitor 16MFD 280V Dry	18-59			20
	75431	GECAP-21/345V-O	Capacitor 21MFD 345V Oil	18-59			20
	75432	GECAP-22.5/345V-O	Capacitor 22.5MFD 345V Oil	18-59			20
	75435	GECAP-24/400V-O	Capacitor 24MFD 400V Oil	18-59			20
	75668	GECAP-24/480V-O	Capacitor 24MFD 480V Oil	18-59			20
	75437	GECAP-26/525V-O	Capacitor 26MFD 525V Oil	18-59			20
	75436	GECAP-28/400V-O	Capacitor 28MFD 400V Oil	18-59			20
	75438	GECAP-32/525V-O	Capacitor 32MFD 525V Oil	18-59			20
	75422	GECAP-35/240V-D	Capacitor 35MFD 240V Dry	18-59			20
	75423	GECAP-55/240V-D	Capacitor 55MFD 240V Dry	18-59			20

See page E-1 for warranty information.

Incandescent Lamps

Bulb Identification

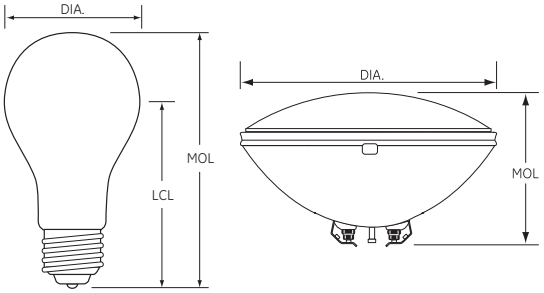

DIA: Diameter of bulb at widest point.

MOL: Maximum Overall Length including base or pins.

LCL: Distance between the center of the arc tube and the Light Center Length reference plane.

Note: Lamp drawings are not drawn to scale. Be sure to check size and dimension information when identifying each lamp.

To convert inches to millimeters, multiply the dimension (in inches) by 25.4 (i.e. 1.5" x 25.4 = 38.1 mm).

Filament Identification

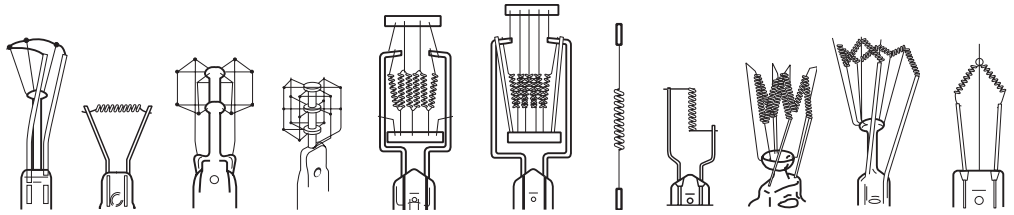

C-9 | C-6 CC-6 | C-17 | C-22 | C-13 | C-13D | C-8 CC-8 | C-8 CC-8 | C-5 | C-7A | C-2V CC-2V

Base Identification

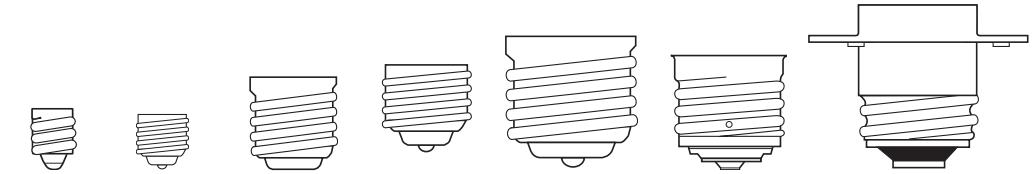

Cand Screw E12 | Intermediate E17 | 3 Contact Med E26 | Med Screw E26 | Mog Screw E39 | 3 Contact Mogul E39D | Mog Pf P40s

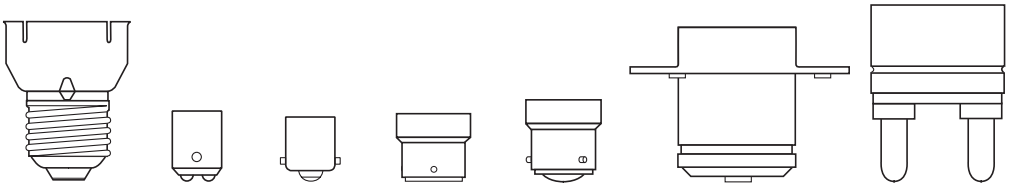

Med Skirt E26/50x39 | Can DC Bay | Can SC Bay B15 | 2-Lug Sleeve B22d | 3-Lug Sleeve B22-3 | MedPf P28s | Mogul BiPost G38

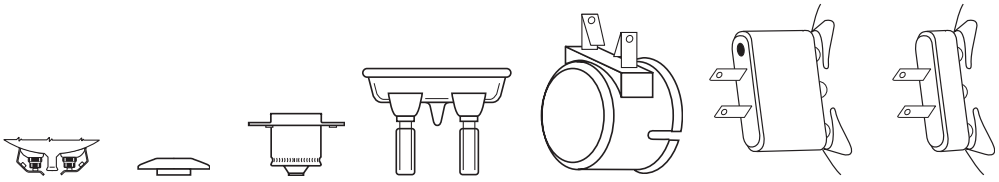

Screw Terminal | Disc Base | Single Contact Pf | Med BiPost | Med Side Pr | Ext. Mog End Pr GX16d | Mog End Pr GX16d

Lamp Locator

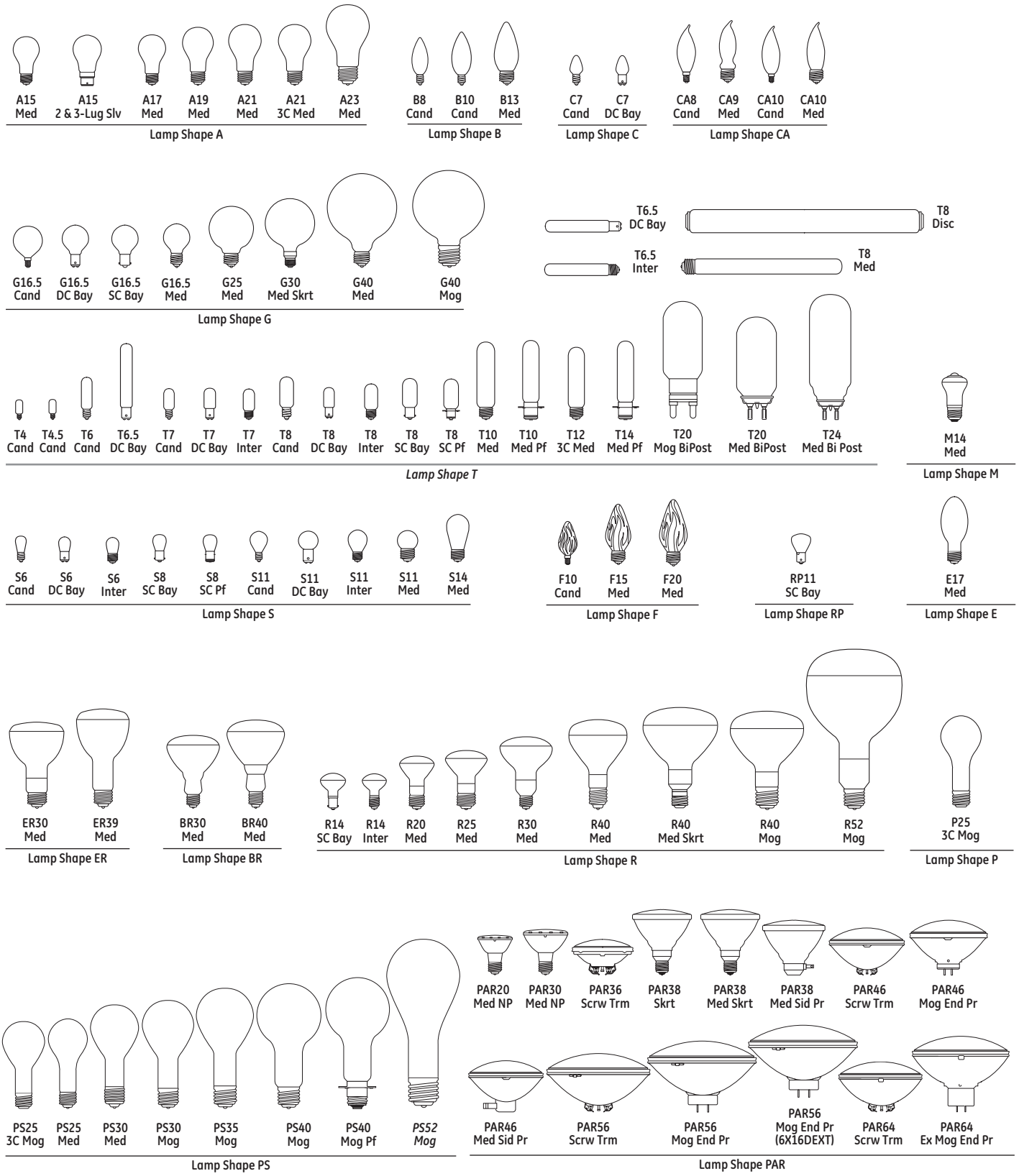

For the most up-to-date product information, see www.gelighting.com.

Incandescent Lamps

Introduction

GE's incandescent lamps trace their ancestry to the world's first practical electric bulb, invented by Thomas Alva Edison, founder in 1879 of the company that became General Electric Company.

More than a century of research and development later, the present range of GE incandescent lamps represents the state of the art of lamps for residential and commercial use, as well as special purpose lamps for decorative or display applications.

In an incandescent lamp, light is generated by heating the filament to incandescence. The hotter the filament, the more efficient it is in converting electricity to light. However, when the filament operates hotter, its life is shortened so the design of each lamp is a balance between efficiency and life. This is why lamps of equal wattage may have different lumen ratings and different life ratings.

Incandescent lamps of similar size are commonly available with different wattage ratings. The fixture wattage limit should not be exceeded.

Protection From Moisture

When Hard Glass appears in the Additional Information column, the outer bulbs are made of special thermal-shock-resistant glass. Sometimes external protection of the lamps is also needed to eliminate the chance of bulb breakage due to contact with water during operation. Footnotes will indicate when external protection is needed. Where Hard Glass is not indicated, the bulb glass is such that the lamps require protection from exposure to mist or condensation as well as direct contact with water during operation.

Rated Life

Values are based on a large number of representative lamps under controlled conditions. Individual lamps or groups of lamps will vary from the Rated Life shown. Rated Life is a median value of life expectancy – the total operating time at which under normal conditions 50% of any large group of initially installed lamps are expected to be still burning.

Incandescent Brand Name Cross-Reference

GE	OSRAM/SYLVANIA	PHILIPS
Reveal®	—	—
Bug-Lite	Bug Lite	Bug-A-Way®
covRguard®	Safeline	Silicone Coated
Saf-T-Gard®	—	—
Soft Pink	Soft Pink	Softone Pastels
Plant Light	Spot-GRO	Agro-Lite
Long Life Soft White	Double Life™ Soft White	Longer Life Soft White
Party Light	—	—
Watt-Miser®	Super Saver®	Econ-o-Watt®
Watt-Miser® Plus	Super Saver Excel®	Extended Service

ATTENTION: This brand-name cross-reference chart is provided only as a quick reference. Other lamp company brand listings may only represent a near equivalent, versus an identical match to GE brands. Individual lamp manufacturers' product offerings and performance specifications are subject to change at any time without notice. Lamp performance may be affected by environmental conditions, and/or auxiliary equipment.

Reveal®
A-line

GE Reveal® Light Bulbs

Superior light quality over regular incandescent that:

- Produces "clean, beautiful light®" for more vibrant colors
- Contains Neodymium glass that filters out dull yellow rays
- Is available in 40-150 watt A-Line
- Also available for nearly every application from candle shapes to flood lights
- A color-enhanced full-spectrum light bulb

GE Rough Service A-Line Bulbs

Built to last, even under many "rough" service conditions...

- Extra filament support design protects against early burnouts caused by bumps, jars and vibration
- Longer life
- Dual Voltage Rating (120V/130V) provides application flexibility
- Saf-T-Gard® coating available – coating is shatter and weather-resistant; resists breakage from heat and thermal shock that can occur from water, sleet, snow, molten solder and weld spatter

Long Life
BR30 Reflector
Floodlight or
Spotlight

GE Long Life Floodlight or Spotlight

- 25% longer life than standard reflectors. Ideal for use in high ceilings and hard-to-reach track lighting
- Easy replacement – same length and width as standard R bulbs
- Some lumen loss from standard reflectors (see listing for lumen values)
- Available in 45W floodlight and 65W floodlight and spotlight

Uses:

- Down lighting, display lighting, accent lighting, wall washing
- Wherever standard reflector bulbs are used

Headings in this catalog section

The following terms and descriptions can help you when checking Incandescent lamp specifications and when ordering products.

Within this product line, lamps are divided by wattage. Within wattage, lamps are listed alphabetically by bulb shape.

Bulb Shape: Bulb shape followed by its size (the maximum diameter of the bulb expressed in eighths of an inch).

Base: The type of base.

Energy Used-Nominal Watts: Energy Used (as defined by FTC Lamp Label Rules). To estimate energy consumption (kWh), multiply watts x hours of use and divide by 1000.

Order Code: It is important to use this five-digit code when ordering to ensure that you receive the exact product you require.

Description: The lamp's identification code.

Volts: Lamp data is based on operation at rated voltage.

Case Quantity: Number of product units packed in a case.

Filament Design: Filaments are designated by a letter combination in which C is a coiled wire filament, CC is a coiled wire that is itself wound into a larger coil, and SR is a straight ribbon filament. Numbers represent the type of filament-support arrangement.

MOL (in): Maximum Overall Length in inches.

LCL (in): Distance between the center of the filament and the Light Center Length reference plane, in inches.

Rated Life (hours): Life (as defined by FTC Lamp Label Rules) is rated life in hours.

Rated Life (years): Life (as defined by FTC Lamp Label Rules) is rated life in years.

Light Output – Lumens: Light output (as defined by FTC Lamp Label Rules) is rated average lumens.

Color Temperature – Kelvins (K): "Warmth" or "Coolness" of the lamp, measured in Kelvins (K). The higher the temperature, the cooler the appearance of the light.

Approximate CBCP (Center Beam Candlepower): For reflector-type lamps. Center Beam Candlepower is the intensity (candelas) at the center or maximum intensity of the beam.

Estimated Annual Operating Costs: Estimated yearly energy cost based on 3 hours/day, $0.11/kWh. Actual cost depends on rates and use.

Warning and Caution Notices: See page 1-20 for information.

Additional Information: Typical application and/or other important information.

Bulb Shape	Base	Watts	Order Code	Description	Volts	Case Qty	Filament Design	MOL (in)	LCL (in)	Rated Life (hrs)	Rated Life (yrs*)	Lumens Initial	Color Temp K	CBCP	Annual Operating Costs**	Warning and Caution Notices	Additional Information
Incandescent Lamps																	
3 Watts																	
S6	Cand	3	11098	75R30/FL/65WM/A	130	24	C-7A	1.87	1.37	3000	11						Clear-Indicator

75 R30 / FL / 65WM / A

- **75** – Identifies the lamp's wattage.
- **R30** – Identifies the lamp's shape.
- **FL** – Identifies the lamp as a floodlight.
- **65WM** – Identifies the lamp as a Watt-Miser®
- **A** – Identifies this lamp as amber colored.

WHEN YOU DON'T KNOW THE LAMP DESCRIPTION

1. Identify the lamp wattage.
2. Measure bulb diameter using ruler in appendix section page D-1 to determine width in eighths of an inch.
3. Identify base type using table on page 1-2.
4. Find your lamp in the table containing the bulb wattage, then match the shape, size and base, which are all listed alphabetically.

Incandescent Lamps

Bulb Shape	Base	Watts	Order Code	Description	Volts	Case Qty	Filament Design	MOL (in)	LCL (in)	Rated Life (hrs)	Rated Life (yrs*)	Lumens Initial	Color Temp K	CBCP	Annual Operating Costs**	Warning and Caution Notices	Additional Information
3 Watts																	
S6	Cand	3	11098	3S6/5 24PK	130	24	C-7A	1.87	1.37	3000		11					Clear-Indicator
4 Watts																	
C7	Cand	4	16001	4C7/W CD2	120	240	C-7A	2.12		3000						2e	White-Long Life Night Light
		4	43050	4C7 CARD 2	120	240	C-7A	2.12		3000						2e	Long Life Clear Night Light
		4	20572	4C7/S CD4	120	120	C-7A	2.12		2000						2e	Standard-Clear Night Light
		4	73257	4C7/S/CD4-6PK	120	6	C-7A	2.12		2000						2e	Standard-Clear Night Light
		4	20573	4C7/W/S CD4	120	120	C-7A	2.12		2000						2e	Standard-White Night Light
		4	73258	4C7/S/W/CD4-6PK	120	6	C-7A	2.12		2000						2e	Standard-Clear Night Light
		4	73259	4C7/PK/CD2-6PK	120	6	C-7A	2.12		3000						2e	Pink-Long Life Night Light
		4	26222	4C7/PK-CD2 6PK	120	240	C-7A	2.12		3000						2e	Pink-Long Life Night Light
		4	73260	4C7/BL/CD2-6PK	120	6	C-7A	2.12		3000						2e	Blue-Long Life Night Light
		4	26223	4C7/BL CD2 6PK	120	240	C-7A	2.12		3000						2e	Blue-Long Life Night Light
6 Watts																	
S6	Cand	6	11316	6S6 24PK	12	24	C-2V	1.87	1.37	1500		50					Clear-Indicator
		6	11329	6S6	24	240	C-2V	1.87	1.37	1500		50					Clear-Indicator
		6	11331	6S6 24PK	30	24	C-2V	1.87	1.37	1500		50					Clear-Train
		6	43397	6S6 BB	32	24	C-2V	1.87	1.37	1500		50					Clear-Train
		6	11367	6S6 TRAY	120	240	C-7A	1.87	1.37	1500		41					Clear-Indicator. 12-Lamp Tray
		6	11577	6S6/3	120	240	C-7A	1.87	1.37	5000		23					Clear-Signal Light
		6	15820	6S6 CARD2	120	240	C-7A	1.87	1.37	1500		41					Clear-Indicator
		6	11369	6S6 TRAY	130	240	C-7A	1.87	1.37	1500		41					Clear-Indicator, 12-Lamp Tray
		6	11372	6S6	145	240	C-7A	1.87	1.37	1500		38					Clear-Indicator
		6	11374	6S6	155	240	C-7A	1.87	1.37	1500		38					Clear-Indicator
S6	DC Bay	6	11357	6S6DC 24PK	75	24	C-7A	1.81	1.43	1500		45					Clear-Indicator
		6	11592	6S6DC TRAY	120	240	C-7A	1.81	1.43	1500		41					Clear-Indicator, 12-Lamp Tray
		6	11594	6S6/DC TRAY	130	240	C-7A	1.81	1.43	1500		41					Clear-Indicator, 12-Lamp Tray
		6	11609	6S6DC 24PK	145	24	C-7A	1.81	1.43	1500		41					Clear-Indicator, 12-Lamp Tray
S6	Inter	6	11660	6S6/7 TRAY 24PK	120	24	C-7A	1.81	1.06	1500		41					Clear-Indicator, 12-Lamp Tray
T4.5	Cand	6	11764	6T41/2/1	130	100	C-7A	1.87	1.31	1500		42					Clear-Indicator
7 Watts																	
C7	Cand	7	11779	7C7 TRAY	120	240	C-7A	2.12		3000		46					Clear-Indicator, 12-Lamp Tray
		7	11815	7C7/W TRAY	120	240	C-7A	2.12		3000		36					White-Indicator, 12-Lamp Tray
		7	11792	7C7 TRAY	130	240	C-7A	2.12		3000		46					Clear-Indicator, 12-Lamp Tray
7.5 Watts																	
S11	Med	8	11847	7 1/2S TRAY	120	240	C-9	2.25		1400		53				2e	Clear-12-Lamp Tray
		8	73261	71/2S/CW/CD-5PK	120	5	C-9	2.25		1400		39				2e	White
		8	41267	71/2S/CW CARD	120	240	C-9	2.25		1400		39				2e	White Night Light
		8	11848	7 1/2S TRAY	130	240	C-9	2.25		1400		53				2e	Clear-12-Lamp Tray
		8	11922	7 1/2S/CW TRAY	130	240	C-9	2.25		1400		39				2e	White-12-Lamp Tray
10 Watts																	
S6	Cand	10	12041	10S6/10	230	24	C-7A	1.87	1.37	1500		66					Clear-Indicator
		10	12050	10S6/10 24PK	250	24	C-7A	1.87	1.37	1500		66					Clear-Indicator
S6	DC Bay	10	12060	10S6/10DC 24PK	230	24	C-7A	1.87	1.87	1500		66					Clear-Indicator
S11	Cand	10	12249	10S11/79	120	120	C-7A	2.31	1.56	1000		80					Clear-Indicator
	Inter	10	12188	10S11N/F	120	120	C-7A	2.31	1.62	1000		79					Frost-Appliance

* Based on 3 hours per day use.
** Based on 3 hours per day use, $0.11 per Kwh

For the most up-to-date product information, see www.gelighting.com. To convert inches to millimeters, multiply by 25.4.
All warning and caution notices found at the end of this section (page 1-20).

Bulb Shape	Base	Watts	Order Code	Description	Volts	Case Qty	Filament Design	MOL (in)	LCL (in)	Rated Life (hrs)	Rated Life (yrs*)	Lumens Initial	Color Temp K	CBCP	Annual Operating Costs**	Warning and Caution Notices	Additional Information
Incandescent Lamps (continued)																	
15 Watts																	
A15	Med	15	97491	15A/W-2PK	120	24	C-9	3.50	2.37	2500		110					Soft-White
		15	12658	15A15	130	120	C-9	3.50	2.37	2500		115					Inside Frost
		15	97488	15A15/CL-2PK	120	24	C-9	3.50	2.37	2500		110					Clear
R14	SC Bay B15	15	33404	15R14SC/SP	12	120	CC-8	2.62		2000		120				5e	Reflector Spot
S11	Cand	15	13210	15S11/13	120	120	C-7A	2.25	1.56	750		115					Clear
S11	DC Bay	15	13188	15S11/3DC	75	120	C-9	2.37	1.25	1000		138					Clear-Train
S11	Med	15	13291	15S11/102	120	240	C-7A	2.25		400		120					Clear-Refrigerator, 12-Lamp Tray
T6	Cand	15	13390	15T6	120	60	C-7A	3.06	1.56	2000		107					Clear-Exit
		15	13402	15T6	145	60	C-7A	3.06	1.56	1500		102					Clear-Exit
		15	22114	15T6C-CD	145	120	C-7A	3.06	1.56	1500		102					Clear-Exit, Blister Card
T7	Cand	15	13494	15T7C	120	120	C-7A	2.25	1.50	3000		108					Clear-Signal Light, Appliance
T7	DC Bay	15	35154	15T7DC CARD	120	240	C-7A	2.25	1.31			108					Clear-Appliance, 12-Pack
T7	Inter	15	35153	15T7N CARD	120	240	C-7A	2.25	1.56			108					Clear-Appliance
T10	Med	15	34407	15T10 24PK	120	24	C-8	5.60		2500		120				5e, 9d	Clear - Aquarium Light Bulb
15/135/150 Watts																	
A21	Med	15/135/150	23068	15/150-SECURITY	120	60	C-2R/CC-8	5.25	3.87	1200	1.1	75/2080/2155	2800		$1.81/$16.26/$18.07	2b, 9c, 9j	Security 3-Way, Soft-White
18 Watts																	
S11	SC Bay BA15s	18	13655	18S11/1SC	10	120	CC-6	2.37	1.25	2000		200					Clear-Railway Signal Light
20 Watts																	
T6.5	DC Bay	20	34241	20T61/2DC/F	120	60	C-8	5.56		5000		90					Frost-Exit Light
T6.5	Inter	20	34272	20T61/2/F	120	60	C-8	5.50		7000		90					Frost-Exit Light
25 Watts																	
A19	Med	25	97478	25A/CL-2PK	120	24	CC-6	4.25	2.50	2500		215			$3.01		Clear
		25	97857	25A/CL/2PK-130V	130	24	CC-6	4.25	2.50	2500		215			$3.01		Clear
		25	97864	25A/2PK-130V	130	24	CC-6	4.25	2.50	2500		215			$3.01		Inside Frost
		25	97492	25A/W-2PK	120	24	CC-6	4.25	2.50	2500		210			$3.01		Soft White
		25	97765	25A/W-2/10PK	120	20	CC-6	4.25	2.50	2500		210			$3.01		Soft White
		25	16333	25A/TP-CD 6PK	120	24	C-9	3.87	2.37	2000					$3.01		Transp. Purple-Party Light
		25	16335	25A/TY-CD 6PK	120	24	C-9	3.87	2.37	2000					$3.01		Transp. Yellow-Party Light
		25	22731	25A/TP 6 PK	120	120	C-9	3.87	2.37	2000					$3.01		Transp. Purple-Party Light
		25	49728	25A/TY 6PK	120	120	C-9	3.87	2.37	2000					$3.01		Transp. Yellow-Party Light
		25	49724	25A/TB 6PK	120	120	C-9	3.87	2.37	2000					$3.01		Transp. Blue-Party Light
		25	22732	25A/TE 6PK	120	120	C-9	3.87	2.37	2000					$3.01		Transp. Teal-Party Light
		25	49725	25A/TG 6PK	120	120	C-9	3.87	2.37	2000					$3.01		Transp. Green-Party Light
		25	22730	25A/TPK 6PK	120	120	C-9	3.87	2.37	2000					$3.01		Transp. Pink-Party Light
		25	49727	25A/TR 6PK	120	120	C-9	3.87	2.37	2000					$3.01		Transp. Red-Party Light
		25	46645	25A/SG/CD-PQ1/5	120	25	CC-6	4.25	2.50	1500					$3.01		Stained Glass
PAR36	Scrw Term	25	14553	25PAR36	6	12	C-6	2.75		1000		130	3000	19700			Pin Spot. Filament Shield
		25	14554	25PAR36/NSP	12	12	C-6	2.75		2000		150		2600			Narrow Spot. Filament Shield
		25	14555	25PAR36/WFL	12	12	C-6	2.75		2000		150		360			Wide Flood. Filament Shield
		25	14556	25PAR36/VWFL	12	12	C-6	2.75		2000		150		160			Very Wide Flood. Filament Shield

* Based on 3 hours per day use.
** Based on 3 hours per day use, $0.11 per Kwh

For the most up-to-date product information, see www.gelighting.com. To convert inches to millimeters, multiply by 25.4.
All warning and caution notices found at the end of this section (page 1-20).

Bulb Shape	Base	Watts	Order Code	Description	Volts	Case Qty	Filament Design	MOL (in)	LCL (in)	Rated Life (hrs)	Rated Life (yrs*)	Lumens Initial	Color Temp K	CBCP	Annual Operating Costs**	Warning and Caution Notices	Additional Information
Incandescent Lamps (continued)																	
25 Watts (continued)																	
PAR46	Scrw Term	25	14562	25PAR46	6	12	C-6	3.75		1000		140		55000			Pin Spot. Filament Shield
R14	Inter	25	18230	25R14N	130	120	CC-2V	2.56		1500		180			$3.01	5e	Reflector-Light, Inside Frost
		25	39156	25R14N	120	120	CC-2V	2.56		1500		180			$3.01	5e	Reflector-Light, Inside Frost
R14	SC Bay B15	25	33405	25R14SC/SP	12	120	CC-8	2.62		2000		200			$3.01	5e	Reflector Spot, Light Inside Frost
S11	SC Bay BA15s	25	14575	25S11/4SC	10	120	CC-6	2.37	1.25	1000		360			$3.01		Clear-Railway, Signal Light
T6.5	DC Bay	25	14676	25T61/2DC	120	60	C-8	5.56		1000		220			$3.01		Clear-Appliance, Scale Illuminator
		25	14678	25T61/2/DC	130	60	C-8	5.56		1000		244			$3.01		Clear-Appliance, Scale Illuminator
		25	14685	25T61/2DC/F	130	60	C-8	5.56		1000		240			$3.01		Frost-Appliance, Scale Illuminator
T6.5	Inter	25	14639	25T61/2	120	60	C-8	5.50		1000		220			$3.01		Clear-Showcase
		25	14641	25T61/2	130	60	C-8	5.50		1000		244			$3.01		Clear-Showcase
		25	44727	25T61/2 CD1-6PK	120	20	C-8	5.50		1000		220			$3.01		Clear-Showcase
		25	14668	25T61/2/F	130	60	C-8	5.50		1000		240			$3.01		Frost-Showcase
T7	DC Bay	25	14741	25T7DC	120	60	C-7A	2.25	1.31	1000		195			$3.01		Clear-Appliance
T7	Inter	25	10692	25T7N-CD 6PK	120	240	C-7A	2.25	1.56	1000		195			$3.01		Clear-Appliance
		25	14791	25T7N	120	60	C-7A	2.25	1.56	1000		195			$3.01		Clear-Appliance
T10	Med	25	45144	25T10 CD1-5PK	130	25	C-8	5.60		1000		250			$3.01	5e, 9d	Clear-Display Light
		25	14880	25T10 24PK	120	192	C-8	5.60		1000		250			$3.01	5e, 9d	Clear-Display Light
		25	45513	25T10/F CD1-5PK	130	25	C-8	5.60		1000		250			$3.01	5e, 9d	Frost-Display Light
27 Watts																	
R20	Med	27	47681	27R20/FL/LL 6PK	120	30	CC-6	3.93		2500	2.3	140	2500		$3.25	5b, 9k	Long Life Reflector-Indoor Spotlight, Reduced Wattage
30 Watts																	
R20	Med	30	14891	30R20/1-6PK	120	30	CC-6	3.93		2000	1.8	180	2500		$3.61	5b, 9k	Indoor Reflector
		30	46848	30R20/1	130	30	C-9	3.93		2000		180			$3.61	5b, 9k	Indoor Reflector-Light I.F
		30	46849	30R20/6	130	30	C-9	3.93		6000		145			$3.61	9d	Reflector-Light I.F.-Flashing Message Sign
S11	DC Bay	30	17948	30S11/DC/RS	75	30	C-9	2.37	1.54	2000		275			$3.61		Clear-Train
30/70/100 Watts																	
A21	Med	30/70/100	97493	30/100-1PK	120	12	C-2R/CC-8	5.25	3.88	1200	1.1	305/995/1300	2800		$3.61/$8.43/$12.05	2b, 5c, 9c, 9j	Soft-White, 3-Way
		30/70/100	97784	30/100RVL- PQ1/12	120	12	C-2R	5.25	3.88	1200	1.1	220/740/960	2850		$3.61/$8.43/$12.05	2b, 9c, 9j	Reveal® Soft-White, 3-Way
40 Watts																	
A15	Med	40	15199	40A15	120	120	C-9	3.50	2.37	1500	1.4	415	2600		$4.82		Clear-Appliance and Oven Service, Vibration Resistant
		40	15206	40A15 CARD 12PK	120	60	C-9	3.50	2.37	1500	1.4	415	2600		$4.82		Clear-Appliance and Oven Service, Vibration Resistant
		40	21188	40A15 CD/2	120	60	C-9	3.50	2.37	1500	1.4	415	2600		$4.82		Clear-Appliance and Oven Service, Vibration Resistant
		40	27495	40A15/F/CD	120	60	C-9	3.50	2.37	1500	1.4	355	2600		$4.82		Frosted-Appliance and Oven Service, Vibration Resistant
		40	27451	40A15/F 120PK	120	120	C-9	3.50	2.37	1500	1.4	355	2600		$4.82		Frost
		40	44409	40A15/CF CD2 6PK	120	30	C-9	3.50	2.37	1500	1.4	415	2600		$4.82		Clear-Ceiling Fan, Vibration Resistant
		40	44410	40A15W/CFCD2 6PK	120	30	C-9	3.50	2.37	1500	1.4	355	2600		$4.82		White-Ceiling Fan, Vibration Resistant
		40	48696	40A15/CF/RVL CD2	120	30	C-9	3.50	2.37	1500	1.4	320	2600		$4.82		Reveal® Clear, Ceiling Fan, Vibration Resistant

* Based on 3 hours per day use.
** Based on 3 hours per day use, $0.11 per Kwh

For the most up-to-date product information, see www.gelighting.com. To convert inches to millimeters, multiply by 25.4.
All warning and caution notices found at the end of this section (page 1-20).

Bulb Shape	Base	Watts	Order Code	Description	Volts	Case Qty	Filament Design	MOL (in)	LCL (in)	Rated Life (hrs)	Rated Life (yrs*)	Lumens Initial	Color Temp K	CBCP	Annual Operating Costs**	Warning and Caution Notices	Additional Information
Incandescent Lamps (continued)																	
40 Watts (continued)																	
A15	Med	40	48697	40A15WCF/RVL CD2	120	30	C-9	3.50	2.37	1500	1.4	260			$4.82		Reveal® Soft-White, Ceiling Fan, Vibration Resistant
		40	31084	40A15/RVL-PQ1/6	120	30	C-9	3.50	2.37	1500	1.4	320			$4.82		Reveal® Clear
		40	48706	40A15/RVL CD2	120	30	C-9	3.50	2.37	1500	1.4	320			$4.82		Reveal® Clear, Appliance
		40	46887	40A15/CF/STGPQ2/6	120	30	C-9	3.50	2.37	1500	1.4	405	2600		$4.82	2a, 2b, 5e, 9l	Clear, Saf-T-Gard®, Ceiling Fan
A15	Cand	40	71393	40A15/CA/C/CF-CD2	120	6	C-7A	3.50	2.37	1500	1.4	305	2500		$4.82		Clear-Ceiling Fan, Vibration Resistant
		40	71394	40A15/CA/W/CF-CD2	120	6	C-7A	3.50	2.37	1500	1.4	230	2500		$4.82		White-Ceiling Fan, Vibration Resistant
R14	Inter	40	25777	40R14/N/CD	120	30	CC-2V	2.68		1500	1.4	280			$4.82	2a, 5e	Indoor Reflector
R14	Med	40	25776	40R14/CD	120	30	CC-2V	2.18		1500	1.4	280			$4.82	2a, 5e	Indoor Reflector
R16	Med	40	25781	40R16/CD		30	CC-6			1500	1.4	225	2500		$4.82	2a, 5e	Indoor Reflector
S11	Inter	40	15734	40S11N/1/F	120	120	C-9	2.31	1.62	500		440			$4.82	5b	Frost
		40	35156	40S11N/1 CARD	120	240	C-9	2.31	1.62	500		440			$4.82	5b	Clear-12-Card Pack
T6.5	Inter	40	15740	40T6 1/2/2	120	60	C-8	5.50		750		420			$4.82		Clear-Refrigerator
		40	44422	40T61/2/2CD1-6PK	120	30	C-8	5.50		750		380			$4.82		Clear-Appliance
		40	15742	40T61/2/2F	120	60	C-8	5.50		750		380			$4.82		Frost-Appliance
T10	Med	40	15852	40T10	120	120	C-8	5.60		1000	0.9	420	2500		$4.82	5e, 9d	Clear-Display Light
		40	15892	40T10/F	120	120	C-8	5.60		1000	0.9	415	2500		$4.82	5e, 9d	Frost-Display Light
		40	45145	40T10/F CD1-5PK	120	25	C-8	5.60		1000	0.9	415	2500		$4.82	5e, 9d	Frost-Display Light
		40	45514	40T10/CL CD1-5PK	120	25	C-8	5.60		1000	0.9	420	2500		$4.82	5e, 9d	Clear-Display Light
		40	48707	40T10/RVL CD1	120	25	C-8	5.60		1000	0.9	290	2550		$4.82	5e, 9d	Reveal® – Clear-Display Light
		40	48709	40T10/F/RVL CD1	120	25	C-8	5.60		1000	0.9	290	2550		$4.82	5e, 9d	Reveal® – Frost-Display Light
45 Watts																	
BR30	Med	45	20330	45R/FL/MI-1 6PK	120	30	CC-6	5.37		2000	1.8	425	2600		$5.42	2a, 5e, 9k	Indoor Reflector
		45	26804	45R30/FL/LL 6PK	120	30	CC-6	5.37		2500	2.3	400	2600		$5.42	2a, 2b, 5e, 9k	Long Life Indoor Reflector
R20	Med	45	14878	45R20MI/1-6PK	120	30	CC-6	3.31		2000	1.8	310	2600		$5.42	2a, 5e, 9k	Indoor Reflector
		45	18279	45R20/TWIN	120	30	CC-6	3.31		2000	1.8	310	2600		$5.42	2a, 5e, 9k	Indoor Reflector
		45	47682	45R20/FL/LL 6PK	120	30	CC-6	3.31		2500	2.3	310	2500		$5.42	2a, 5e, 9k	Long Life Indoor Reflector
		45	73026	45R20/YR	120	6	CC-6	3.31		1500	1.4	350	2500		$5.42	2a, 5e, 9k	Indoor Reflector
		45	73025	45R20/YR-PK2/3	120	3	CC-6	3.31		1500	1.4	350	2500		$5.42	2a, 5e, 9k	Indoor Reflector
		45/40	73029	45R20/130V	130/120	30	CC-6	3.31		2000/4000	1.8/3.6	300/225	2500		$5.42	2a, 5e, 9k	Indoor Reflector
		45	73439	45R20/RVL PK1/6	120	30	CC-6	3.31		2000	1.8	230	2550		$5.42	2a, 5e, 9k	Indoor Reflector
50 Watts																	
A19	Med	50	16201	50A19/RS/SH	75	120	C-9	3.87	2.50	1000		500				2a, 5a	Train, Rough Service Short
PAR36	Scrw Term	50	11468	50PAR36/WFL/4	12	12	C-6	2.75		4000		300		720			Wide Flood. Filament Shield
		50	12892	50PAR36/VNSP	12	12	C-6	2.75		2000		330		19000			Very Narrow Spot. Filament Shield
		50	16540	50PAR36/NSP	12	12	C-6	2.75		2000		330		11000			Narrow Spot. Filament Shield
		50	16541	50PAR36/WFL	12	12	C-6	2.75		2000		330		900			Wide Flood. Filament Shield
		50	16542	50PAR36/VWFL	12	12	C-6	2.75		2000		330		600			Very Wide Flood. Filament Shield
R20	Med	50	14888	50R20/PL/1-6PK	120	30	CC-6	3.93		2000					$6.02	2a, 5e, 9k	Reflector Plant Light
		50	22752	50R20/BLB 6PK	120	6	CC-6	3.93		1000					$6.02	2a, 2f, 5b, 7a, 7c, 9k	Blacklight Reflector
ER30	Med	50	44429	50ER30	120	24	CC-6	6.06		2000					$6.02		Elliptical Reflector

* Based on 3 hours per day use.
** Based on 3 hours per day use, $0.11 per Kwh

For the most up-to-date product information, see www.gelighting.com. To convert inches to millimeters, multiply by 25.4.
All warning and caution notices found at the end of this section (page 1-20).

Bulb Shape	Base	Watts	Order Code	Description	Volts	Case Qty	Filament Design	MOL (in)	LCL (in)	Rated Life (hrs)	Rated Life (yrs*)	Lumens Initial	Color Temp K	CBCP	Annual Operating Costs**	Warning and Caution Notices	Additional Information
Incandescent Lamps (continued)																	
50/100/150 Watts																	
A21	Med	50/ 100/ 150	97494	50/150-1PK	120	12	CC-8	5.25	3.87	1200	1.1	615/ 1540/ 2155	2800		$6.02/ $12.05/ $18.07	2b, 9j	Soft-White, 3-Way
		50/ 100/ 150	97763	50/150-2PK	120	6	CC-8	5.25	3.87	1200	1.1	615/ 1540/ 2155	2800		$6.02/ $12.05/ $18.07	2b, 9j	Soft-White, 3-Way
		50/ 100/ 150	97785	50/150RVL-1/12PQ	120	12	CC-8	5.25	3.87	1200	1.1	450/ 1150/ 1600	2850		$6.02/ $12.05/ $18.07	2b, 9j	Reveal®, Soft-White 3-Way
		50/ 100/ 150	97469	50/150/RVL-2PK	120	6	CC-8	5.25	3.87	1200	1.1	450/ 1150/ 1600	2850		$6.02/ $12.05/ $18.07	2b, 9j	Reveal®, Soft-White 3-Way
		50/ 100/ 150	97781	50/150/LL-1/12PK	120	12	CC-8	5.25	3.87	1920	1.8	560/ 1400/ 1960	2800		$6.02/ $12.05/ $18.07	2b, 9j	Long Life, Soft-White 3-Way
50/200/250 Watts																	
A21	Med	50/ 200/ 250	97482	50/250/1-1PK	120	12	CC-8/ CC-25	5.25	3.87	1200	1.1	590/ 3335/ 3925	2800		$6.02/ $24.09/ $30.11	2b, 9c, 9j	Soft-White, 3-Way
60 Watts																	
A19	Med	60/53	72528	60A/S/130-TP2/12	130/120	24	C-7A			3000	2.7	625/475					Rough-Service
		60/53	72529	60A/RS130-PK2/12	130/120	24	C-7A	4.13	2.91	2000/5400		625/475			$7.23/$6.38	2a, 5e	Rough Service
		60/53	72549	60A/RS/STG-T2/12	130/120	24	C-7A	4.13	2.91	2000/5400		500/380			$7.23/$6.38	2a, 2b, 5e, 9l	Rough Service Saf-T-Gard®
		60	97483	60A/SPK-2PK	120	24	CC-6	4.43	3.12	1000		675			$7.23	2b	Soft Pink
		60	97495	60A/Y-2PK	120	24	CC-6	4.43	3.12	1000		550			$7.23	2b	Yellow-Bug Light
		60	25905	60A/BLB 6PK	120	30	C-9	4.43		1000					$7.23	2a, 2f, 5b, 7a, 7c, 9k	Blacklight
		60	41624	60A/PL 6PK	120	30	CC-6	4.43	3.12	1000		630			$7.23	5e	Plant
A15	Med	60	44407	60A15/CF CD2 6PK	120	30	C-9	3.50	2.37	1500	1.4	650	2700		$7.23		Clear-Ceiling Fan, Vibration Resistant
		60	14029	60A15/W/CF-CD2	120	60	C-9	3.50	2.37	1500	1.4	650	2700		$7.23		White-Ceiling Fan, Vibration Resistant
		60	46888	60A15CF/STGPQ2/6	120	30	C-9	3.50	2.37	1500	1.4	635	2700		$7.23	2a, 2b, 5e, 9l	Ceiling Fan Saf-T-Gard®
A15	Cand	60	71395	60A15/CA/C/CF-CD2	120	6	C-7A	3.50	2.37	1500	1.4	635	2500		$7.23		Clear-Ceiling Fan, Vibration Resistant
		60	71396	60A15/CA/W/CF-CD2	120	6	C-7A	3.50	2.37	1500	1.4	440	2500		$7.23		White-Ceiling Fan, Vibration Resistant
		60	48698	60A15/CF/RVL CD2	120	30	C-9	3.50	2.37	1500	1.4	500			$7.23		Reveal® – Clear, Ceiling Fan, Vibration Resistant
R46	Scrw Term	60	17212	60PAR/2/R	38	12	CC-2V	3.75		800							Red Lens - Train Warning
65 Watts																	
BR30	Med	65	18011	65R/FL/MI-TWIN	120	6	CC-6	5.37		2000	1.8	700	2600		$7.83	2a, 5e, 9k	Indoor Reflector, Twin Pink
		65	20331	65R30/FL/MI- 6PK	120	30	CC-6	5.37		2000	1.8	700	2600		$7.83	2a, 2b, 5e, 9k	Indoor Reflector, Flood
		65	20332	65R30/SP/MI-6PK	120	30	CC-6	5.37		2000	1.8	700	2600		$7.83	2a, 2b, 5e, 9k	Indoor Reflector, Spot
		65	22714	65R30FL/COMM12PK	120	12	CC-6	5.37		2000	1.8	700	2600		$7.83	2a, 2b, 5e, 9k	Indoor Reflector, 12 Pack
		65	26805	65R30/FL/LL 6PK	120	30	CC-6	5.37		2500	2.3	670	2600		$7.83	2a, 2b, 5e, 9k	Long Life, Indoor Reflector, Flood
		65	48917	65R30/FL/LLPQ2/3	120	15	CC-6	5.37		2500	2.3	670	2600		$7.83	2a, 2b, 5e, 9k	Long Life, Indoor Reflector, Flood
		65	26806	65R30/SP/LL 6PK	120	30	CC-6	5.37		2500	2.3	670	2600		$7.83	2a, 2b, 5e, 9k	Long Life, Indoor Reflector, Spot
		65	11684	65R30FLRVL-PK2/3	120	15	CC-6	5.37		2000	1.8	510	2650		$7.83	2a, 2b, 5e, 9k	Reveal® Floodlight
		65	48692	65R/FL/RVL PQ1/6	120	30	CC-6			2000	1.8	510	2650		$7.83	2a, 2b, 5e, 9k	Reveal® Floodlight

* Based on 3 hours per day use.
** Based on 3 hours per day use, $0.11 per Kwh

For the most up-to-date product information, see www.gelighting.com. To convert inches to millimeters, multiply by 25.4.
All warning and caution notices found at the end of this section (page 1-20).

Incandescent Lamps

Bulb Shape	Base	Watts	Order Code	Description	Volts	Case Qty	Filament Design	MOL (in)	LCL (in)	Rated Life (hrs)	Rated Life (yrs*)	Lumens Initial	Color Temp K	CBCP	Annual Operating Costs**	Warning and Caution Notices	Additional Information
Incandescent Lamps (continued)																	
65 Watts (continued)																	
BR30	Med	65	73179	65R30/RVL/TW-3PK	120	3	CC-6	5.37		2000	1.8	530	2600		$7.83	2a, 2b, 5e, 9k	Reveal® Floodlight
		65	47723	65R30FL/STGPQ1/6	120	30	CC-6	5.37		2000	1.8	650	2700		$7.83	2a, 2b, 5e, 9a, 9k, 9l, 9m	Indoor Reflector, Flood, Saf-T-Gard®
		65	20996	65R30/PL-1 6PK	120	30	CC-6	5.37		2000					$7.83	2a, 2b, 5e, 9k	Reflector, Plant Light
		65	46855	65R30/FL	130	30	CC-6	5.37		2000 /5200	1.8	670/510	2600		$7.83	2a, 2b, 5e, 9k	Watt-Miser® Reflector
		65	46856	65R30/SP	130	30	CC-6	5.37		2000/5200	1.8	670/510	2600		$7.83	2a, 2b, 5e, 9k	Watt-Miser® Reflector
BR40	Med	65	14016	65R40/FL/MI-6PK	120	30	CC-6	6.56		2000	1.8	580	2600		$7.83	2a, 2b, 5e, 9k	Indoor Reflector, Flood
		65	47683	65R40/FL/LL	120	30	CC-6	6.56		2500	2.3	480	2600		$7.83	2a, 2b, 5e, 9k	Long Life, Indoor Reflector, Flood
		65	46861	65R40/FL	130	30	CC-6	6.56		2000	1.8	475	2600		$7.83	2a, 2b, 5e, 9k	Watt-Miser® Reflector-I.F.
BR40	Med	65	87904	65R40FL/RVL-TP6	120	30	CC-6	6.56		2000	1.8	470	2650		$7.83	2a, 2b, 5e, 9k	Reveal® Reflector Flood
PAR38	Med Sid Pr	65	80314	75PAR/3FL/65WM	120	12	CC-6	4.30		2000	1.8	675	2675	1750	$7.83	1a, 2a, 2b	Compact Flood, Reduced Wattage
70 Watts																	
A21	Med	70/170/ 240	15846	70/240A/RL/SW6PK	120	30	CC-8/CC-8	5.25	3.62	1000	0.9	800/2800/ 3600	2850		$8.43/ $20.48/ $28.91		3-Way Reader Light
75 Watts																	
A19	Med	75/67	72530	75A/RS130-PK6	130/120	6	C-7A	4.13	2.91	2000/5400		740/560			$9.03/$8.07	2a, 5e	Rough Service
A21	Med	75	18274	75A/RS 12PK-5	120	60	C-7A	4.13	2.91	1000	0.9	750			$9.03	2a	Rough-Service
		75	46895	75A/RS/STG PQ1/6	120	30	C-7A	4.13	3.66	1000	0.9	715			$9.03	2a, 2b, 5e, 9l	Rough Service, Saf-T-Gard®
		75/66	17527	75A/RS 60PK	130/120	60	C-7A	4.13	2.91	1000/2850	0.9/2.6	740/560			$9.03/$7.95	2a, 2b, 5e, 9l	Rough-Service
		75/67	72550	75A/RS/STG-TP6	130/120	6	C-7A	4.13	2.91	2000/5400		740/560			$9.03/$8.07	2a	Rough Service, Saf-T-Gard®
R30	Med	75	22748	75R30/BLB 6PK	120	6	C-9	5.37		1000					$9.03	2a, 2f, 5b, 7a, 7c, 9k	Reflector Blacklight
PAR38	Med Sid Pr	75	80319	75PAR/3SP/MINE	120	12	CC-6	4.30		2000		765	2725			1a, 2a, 2b, 9n	Mine Reflector
		75	80316	75PAR/3FL/MINE	120	12	CC-6	4.30		2000		765	2725	1750		1a, 2a, 2b, 9n	Mine, Flood
PAR46	3 Prong	75	36473	75PAR46/TS	120	12	CC-6	3.87		6000		700					Traffic Signal
85 Watts																	
PAR38	Med Skirt	85	20945	85PAR/FL/BG 6PK	120	6	CC-6	5.31		2000						1a, 2a, 2b	Yellow-Bug Light, BB
		85	13465	100PAR/B/85WM6PK	120	6	CC-6	5.31		2000						1a, 2a, 2b	Powder Coated-Blue, BB
		85	13472	100PAR/R/85WM6PK	120	6	CC-6	5.31		2000						1a, 2a, 2b	Powder Coated-Red, BB
		85	13473	100PAR/Y/85WM6PK	120	6	CC-6	5.31		2000						1a, 2a, 2b	Powder Coated-Yellow, BB
		85	13474	100PAR/G/85WM6PK	120	6	CC-6	5.31		2000						1a, 2a, 2b	Powder Coated-Green, BB
90 Watts																	
A19	Med	90	61435	90A/Y-2PK	120	24	CC-8	4.43	3.12	1000					$10.84	2b	Yellow-Bug Light
100 Watts																	
A19	Med	100	97484	100A/SPK-2PK	120	24	CC-8	4.43	3.12	1000		1330			$12.05	2b	Soft Pink
		100/89	72527	100A/RS130-PK12	130/120	12	C-7A	4.13	2.91	2000/5400		1070/815			$12.05/ $10.72	2a, 5e	Rough Service
		100/89	72546	100A/RS/STG-TP6	130/120	6	C-7A	4.13	2.91	2000/5400		1070/815			$12.05/ $10.72	2a, 2b, 5e, 9l	Rough Service, Saf-T-Guard®
A21	Med	100/89	17522	100A/RS 60PK	130/120	60	C-7A	4.13	2.91	2000/5400		1070/815			$12.05/ $10.72	2a, 5e	Rough-Service
		100	18275	100A/RS 12PK-5	120	60	C-7A	4.13	2.91	1000	0.9	1230			$12.05	2a	Rough-Service
		100	47261	100A/RS/STGPQ1/6	120	30	C-7A	4.13	3.66	1000	0.9	1160			$12.05	2a, 2b, 5e, 9l	Rough Service, Saf-T-Guard®

* Based on 3 hours per day use.
** Based on 3 hours per day use, $0.11 per Kwh

For the most up-to-date product information, see www.gelighting.com. To convert inches to millimeters, multiply by 25.4.
All warning and caution notices found at the end of this section (page 1-20).

Incandescent Lamps (continued)

Bulb Shape	Base	Watts	Order Code	Description	Volts	Case Qty	Filament Design	MOL (in)	LCL (in)	Rated Life (hrs)	Rated Life (yrs*)	Lumens Initial	Color Temp K	CBCP	Annual Operating Costs**	Warning and Caution Notices	Additional Information
100/200/300 Watts																	
PS25	Mog	100/ 200/ 300	41459	100/300 6PK	120	30	CC-6	6.68	4.43	1200	1.1	1250/ 2650/ 3900	2800		$12.05/ $24.10/ $36.15	2b, 9c, 9j	Soft-White, 3-Way
110 Watts																	
R30	Med	110	46859	110R30/FL/RS/1	120	30	C-11	5.38		2000		900			$13.25	2a, 2b, 5e, 9k	Reflector Flood. I.F. Rough Service
120 Watts																	
BR40	Med	120	21000	120R40/PL-1 6PK	120		CC-6	6.56		2000					$14.45	2a, 2b, 5e, 9k	Reflector Plant Light, BB
		120	47725	120R40FL/STG PQ6	130	30	CC-11	6.56		2000/5200	1.8	1025/780	2700/2600	1200	$14.45	2a, 2b, 5e, 9a, 9k, 9l, 9m	Reflector, Saf-T-Guard®
PAR38	Med Sid Pr	120	80313	150PAR/3FL/120WM	120	12	CC-6	4.30		2000		1370		3600		1a, 2a, 2b, 9n	Watt-Miser®, Flood, Reduced Wattage
		120	80322	150PAR/3SP/120WM	120	12	CC-6	4.30		2000		1370		9200		1a, 2a, 2b, 9n	Watt-Miser®, Spot, Reduced Wattage
125 Watts																	
R40	Med	125	48069	125R40/1 6PK	120	30	C-9			5000	4.6					2a, 2b, 3b, 5e, 6a	Reflector-Warm Up Infrared Heat Lamp
150 Watts																	
A21	Med	150	16068	150A/CL 12PK	120	12	CC-8	5.37	4.06	750	0.7	2710	2900		$18.07		Clear
		150	10429	150A/W 12PK	120	12	CC-8	5.37	4.06	750	0.7	2680	2900		$18.07		Soft-White
		150	16703	150A/RVL	120	30	CC-8	5.37	4.06	750	0.7	2100	2950		$18.07		Reveal®
		150/ 133	72532	150A21/RS-PK6	130/ 120	30	C-17	5.37	4.06	1000/ 2600		2065/ 1580			$18.07/ $16.02	2a, 5e	Rough Service
PS25	Med	150/ 133	72547	150PS25/RS/STG	130/ 120	60	C-17	6.93	5.18	1000/ 2600		2160/ 1650			$18.07/ $16.02	2a, 2b, 5e, 9l	Rough Service Saf-T-Guard®
PAR38	Med Sid Pr	150	80321	150PAR/3SP/MINE	120	12	CC-6	4.30		2000		1740		12000		1a, 2a, 2b, 9n	Mine, Spot
		150	80315	150PAR/3FL/MINE	120	12	CC-6	4.30		2000		1740	2775	3100		1a, 2a, 2b, 9n	Mine, Flood
		150	80317	150PAR/3FL/MINE	130	12	CC-6	4.30		2000		1740		3100		1a, 2a, 2b, 9n	Mine, Flood
PAR38	Med Skirt	150	19465	150PAR/FL/B	120	12	CC-6	5.31		2000						1a, 2a, 2b	Flood. Dichro Blue
		150	19467	150PAR/FL/G	120	12	CC-6	5.31		2000						1a, 2a, 2b	Flood. Dichro Green
		150	19468	150PAR/FL/R	120	12	CC-6	5.31		2000						1a, 2a, 2b	Flood. Dichro Red
		150	26370	150PAR/FL/CVG	120	12	CC-6	5.31		2000		1700				1a, 2a, 2b, 9L, 9m	CovRguard® Flood, BB, Coated
		150	26371	150PAR/SP/CVG	120	12	CC-6	5.31		2000		1700				1a, 2a, 2b, 9L, 9m	CovRguard® Spot BB, Coated
		150	48037	150PAR/FL/STGPQ6	120	6	CC-6	5.31		2000		1700				2a, 2b, 5e, 9a, 9k, 9l, 9m	Saf-T-Gard® Flood, BB, Coated
PAR46	3 Prong	150	35327	150PAR46/TS	115	12	CC-6	4		6000		1750					Traffic Signal-Burn Horizontal
	Scrw Term	150	19512	150PAR46/1	32	12	CC-8	3.75		800		1950		10000			Mine Locomotive Headlight
		150	19517	150PAR46	125	12	C-13	3.75		1000		1250					Mine Locomotive Headlight
	Med Sid Pr	150	41968	150PAR46/3MFL	125	12	CC-13	4		2000		1500	2750	8000		1a, 2a, 5b, 5c, 9n	Medium Flood
175 Watts																	
PAR38	Med Skirt	175	13643	175PAR38/HEAT	120	12	CC-6	5.31	4.31	5000		3100				1a, 2a, 2b, 3b	Infrared-Clear

* Based on 3 hours per day use.
** Based on 3 hours per day use, $0.11 per Kwh

For the most up-to-date product information, see www.gelighting.com. To convert inches to millimeters, multiply by 25.4.
All warning and caution notices found at the end of this section (page 1-20).

Bulb Shape	Base	Watts	Order Code	Description	Volts	Case Qty	Filament Design	MOL (in)	LCL (in)	Rated Life (hrs)	Rated Life (yrs*)	Lumens Initial	Color Temp K	CBCP	Annual Operating Costs**	Warning and Caution Notices	Additional Information
Incandescent Lamps (continued)																	
200 Watts																	
A21	Med	200	16069	200A/CL-1 12PK	120	12	CC-8	5.37	4.06	750	0.7	3780	2900		$24.09		Crystal
		200	11585	200A/W-1 12PK	120	12	CC-8	5.37	4.06	750	0.7	3405	2900		$24.09		Soft-White
		200	44534	200A/W-PK6	120.1		CC-8	5.37	4.06	750	0.7	3405	2900		$24.09		Soft-White
		200	89371	200A/RVL-TP1/6	120	30	CC-8	5.37	4.06	750	0.7	2395	2950		$24.09		Reveal® Soft-White
		200/ 177	25936	200A21/99/IF	130/ 120	60	CC-8	5.37	4.06	2500/ 6800		2780/ 2140			$24.09/ $21.32		I.F.-Extended Service (Ratings @ 120 volts)
PAR46	Med Sid Pr	200	20115	200PAR46/3NSP	120	12	CC-13	4		2000		2270	2750	31000		1a, 2a, 5b, 5c, 9n	Narrow Reflector
		200	20138	200PAR46/3MFL	120	12	CC-13	4		2000		2270	2750	11500		1a, 2a, 5b, 5c, 9n	Medium Flood
		200	20117	200PAR46/3NSP	130	12	CC-13	4		2000		2270	2750	31000		1a, 2a, 5b, 5c, 9n	Narrow Reflector
		200	20140	200PAR46/3MFL	130	12	CC-13	4		2000		2270	2750	11500		1a, 2a, 5b, 5c, 9n	Medium Flood
PAR56	Scrw Term	200	20122	200PAR	30	12	CC-8	4.50		350				230000			Locomotive Headlight
	Mog End Pr	200	49889	200PAR56/MFL	120	12	CC-13	5		2000		2270	2750	15000		1a, 2a, 5b, 5c, 9n	Medium Flood
PS30	Med	200/177	72548	200PS30RS/23/STG	130/120	60	C-9	8.06	6.00	1000/2600		3000/2280				2a, 2b, 5e, 9l	Saf-T-Guard®
240 Watts																	
PAR56	Scrw Term	240	20575	240PAR56/VNSP	12	12	C-6	4.50		2000			2800	140000		1a, 2a, 5b, 5c, 9n	Very Narrow Reflector
		240	20576	240PAR56/MFL	12	12	C-6	4.50		2000			2800	46000		1a, 2a, 5b, 5c, 9n	Medium Flood
		240	20577	240PAR56/WFL	12	12	C-6	4.50		2000			2800	13000		1a, 2a, 5b, 5c, 9n	Wide Flood
250 Watts																	
R40	Med	250	37770	250R40/1 6PK	120	30	C-9	6.56		5000		2200				2a, 2b, 3b, 5e, 6a	Reflector-Warm Up Infrared Heat Lamp-Clear Face
		250	37771	250R40/10 6PK	120	30	C-9	6.56		5000						2a, 2b, 3b, 5e, 6a	Reflector-Chill Chaser Infrared Heat Lamp. Red, HRG
R40	Med Skirt	250	20724	250R40/4	120	24	C-9	7.43		5000						2a, 2b, 3b, 5e, 6a	Reflector Infrared Industrial-Light I.F., BB
R40	Med	250	47724	250R40/1/STG PQ6	120	30	C-9	6.56		5000						2a, 2b, 5e, 9a, 9k, 9l, 9m	Heat Lamp Saf-T-Gard® – Shatter-Resistant
		250	23423	21A/R40/FL	12	24	C-2V	6.68		1000		2850		1600		2b, 5a, 5e	Reflector Flood
300 Watts																	
PS25	Med	300/266	73788	300M/130V-PK6	130/120	6	CC-8	6.93	4.92	750/1950		6120/4650					Clear
		300/266	73790	300M/IF/130V-PK3	130/120	3	CC-8	6.93	4.92	750/1950		6120/4650					Inside Frost
PS35	Mog Screw	300	21025	300	130	24	C-9	9.37	7.00	1000		5820					Clear
		300	21079	300/IF	130	24	C-9	9.37	7.00	1000		5820					Inside Frost
R40	Med	300	21197	300R/SP	120	24	CC-2V	6.56		2000		3700		9000		2a, 2b, 5b, 9e	Reflector-Light I.F. HORIZ
		300	21213	300R/FL	120	24	CC-2V	6.56		2000		3700		2500		2a, 2b, 5b, 9e	Reflector-Flood I.F. HORIZ
		300	21229	300R/FL/1	120	24	CC-2V	6.75		2000		3000		4400		2a, 2b, 5b, 9e	Reflector-Flood-I.F. BB, HRG
		300/266	21215	300R/FL	130/120	24	CC-2V	6.56		2000/5400		3465/2670		2500		2a, 2b, 5b, 9e	Reflector Flood-I.F. HORIZ (Ratings @ 120 volts)

* Based on 3 hours per day use.
** Based on 3 hours per day use, $0.11 per Kwh

For the most up-to-date product information, see www.gelighting.com. To convert inches to millimeters, multiply by 25.4.
All warning and caution notices found at the end of this section (page 1-20).

Bulb Shape	Base	Watts	Order Code	Description	Volts	Case Qty	Filament Design	MOL (in)	LCL (in)	Rated Life (hrs)	Rated Life (yrs*)	Lumens Initial	Color Temp K	CBCP	Annual Operating Costs**	Warning and Caution Notices	Additional Information
Incandescent Lamps (continued)																	
300 Watts (continued)																	
R40	Mog Screw	300	21254	300R/3FL	120	24	CC-2V	7.25		2000		3000		4500		2a, 2b, 5b, 9e	Reflector Flood-I.F.1BB
PAR56	Scrw Term	300	23427	300PAR56/WFL	12	12	C-6	4.50		1000		6000				2b, 9f, 9n	PAR-Wide Flood. Swimming
	Mog End Pr	300	20803	300PAR56/NSP	120	12	CC-13	5		2000		3840	2750	68000		1a, 2a, 5b, 5c, 9n	Narrow Reflector
		300	20836	300PAR56/MFL	120	12	CC-13	5		2000		3840	2750	24000		1a, 2a, 5b, 5c, 9n	Medium Flood
		300	20849	300PAR56/WFL	120	12	CC-13	5		2000		3840	2750	11000		1a, 2a, 5b, 5c, 9n	Wide Flood
		300	20838	300PAR56/MFL	130	12	CC-13	5		2000		3840	2750	24000		1a, 2a, 5b, 5c, 9n	Medium Flood
		300	20851	300PAR56/WFL	130	12	CC-13	5		2000		3840	2750	11000		1a, 2a, 5b, 5c, 9n	Wide Flood
350 Watts																	
PAR56	Scrw Term	350	19866	350PAR56/SP	75	12	CC-8	4.50		500		6200				1a, 2a, 5b, 5c, 9n	Ditch Light-Locomotive
375 Watts																	
R40	Med Skirt	375	21331	375R40	115	24	C-9	7.37		5000						2a, 2b, 3b, 5e, 6a	Reflector Infrared Industrial-Light I.F., BB
		375	21334	375R40/1	115	24	C-9	7.50		5000		2700		1170		2a, 2b, 3b, 5e, 6a	Reflector Infrared Industrial-Clear Face, HRG, BB
400 Watts																	
R40	Med	400	17542	400R40/FL	120	24	CC-2V	6.75		2000		4400		4500		5b, 5c, 9b	Reflector Flood. Swimming Pool, BB, HRG
500 Watts																	
PS35	Mog Screw	500	21532	500	130	24	CC-8	9.37	7.00	1000		10850				5d, 5e	Clear, BB
R40	Mog Screw	500	21734	500R/3FL	120	24	CC-2V	7.25		2000		6000		8000		2a, 2b, 5b, 9e	Reflector Flood-I.F. BB, HRG
		500	21736	500R/3FL	130	24	CC-2V	7.25		2000		6000		8000		2a, 2b, 5b, 9e	Reflector Flood-I.F., BB, HRG
R40	Med	500	48316	500R40/5FL/SLV	120	24	CC-2V	6.75		2000		5500		3200		9k	Reflector-Swimming Pool. BB, HRG
PAR64	Mog End Pr	500	39411	500PAR64/MFL	230	12	CC-13	6		2000		5500	2700			1a, 2a, 5b, 5c, 9n	Medium Flood
		500	39414	500PAR64/WFL	230	12	CC-13	6		2000		5500	2700			1a, 2a, 5b, 5c, 9n	Wide Flood
	ExMog EndPr	500	39406	500PAR64/NSP	120	12	CC-13	6		2000		6500	2800	110000		1a, 2a, 5b, 5c, 9n	Narrow Reflector
		500	39409	500PAR64/MFL	120	12	CC-13	6		2000		6500	2800	37000		1a, 2a, 5b, 5c, 9n	Medium Flood
		500	39412	500PAR64/WFL	120	12	CC-13	6		2000		6500	2800	13000		1a, 2a, 5b, 5c, 9n	Wide Flood
1000 Watts																	
PS52	Mog Screw	1000	22260	1000	130	12	CC-8	13	9.50	1000		23740				5d, 5e	Clear, BB
Export Only																	
40 Watts																	
A19	Med	40	13255	40A 48PK	120	48	CC-6	4.331	3.15	1000	0.8	505	2700				Standard
		40	13257	40A/W 48PK	120	48	CC-6	4.331	3.15	1000	0.8	490	2700				Standard
		40	48687	40A/RVL 48PK	120	48	CC-6	4.409	3.15	1000	0.8	360	2725				Reveal® Soft-White
		40	97470	40A/CL-2PK	120	24	CC-6	4.331	3.15	1500	0.8	480	2700				Clear

* Based on 3 hours per day use.
** Based on 3 hours per day use, $0.11 per Kwh

For the most up-to-date product information, see www.gelighting.com. To convert inches to millimeters, multiply by 25.4.
All warning and caution notices found at the end of this section (page 1-20).

Bulb Shape	Base	Watts	Order Code	Description	Volts	Case Qty	Filament Design	MOL (in)	LCL (in)	Rated Life (hrs)	Rated Life (yrs*)	Lumens Initial	Color Temp K	CBCP	Annual Operating Costs**	Warning and Caution Notices	Additional Information
Export Only (continued)																	
60 Watts																	
A19	Med	60	41026	60A 48PK	120	48	CC-6	4.311	2.897	1000	0.8	865	2800				Standard
		60	41028	60A/W 48PK	120	48	CC-6	4.331	3.15	1000	0.8	840	2800				Standard
		60	97490	60A/CL-2PK	120	24	CC-8	4.331	3.15	1000	0.8	870	2800				Clear
		60	97496	60A/W/LL-2PK	120	24	CC-6	4.331	3.15	1000	0.8	820	2800				Soft-White, Long Life
75 Watts																	
A19	Med	75	41030	75A 48PK	120	48	CC-6	4.43	3.12	750	0.7	1170	2800		$9.03		Standard
		75	97779	75A-2/24PK	120	48	CC-6	4.43	3.12	750	0.7	1170	2800		$9.03		Standard
		75	97468	75A/CL-2PK	120	24	CC-6	4.43	3.12	750	0.7	1170	2750		$9.03		Clear
		75	48689	75A/RVL 48PK	120	48	CC-8	4.43	3.12	750	0.7	830	2850		$9.03		Reveal® Soft-White
		75	41032	75A/W 48PK	120	48	CC-6	4.43	3.12	750	0.7	1170	2800		$9.03		Soft-White
		75	97497	75A/W/LL-2PK	120	24	CC-6	4.43	3.12	1125	1.0	1125	2800		$9.03		Soft-White, Long Life
PAR38	Med Skirt	75	14510	75PAR/FL/EX-120	120	12	CC-6	5.31		2000		765	2700	1750		1a, 2a, 2b	Flood
85 Watts																	
PAR38	Med Skirt	85	14509	100PAR/FL85WM/EX	120	6	CC-6	5.31		2000		930	2700	2000		1a, 2a, 2b	Watt-Miser®, Flood, Reduced Wattage
100 Watts																	
A19	Med	100	41034	100A 48PK	120	48	CC-8	4.43	3.12	750	0.7	1710	2800		$12.05		Standard
		100	97780	100A-2/24PK	120	24	CC-8	4.43	3.12	750	0.7	1710	2800		$12.05		Standard
		100	97489	100A/CL-2PK	120	24	CC-8	4.43	3.12	750	0.7	1730	2800		$12.05		Clear
		100	48690	100A/RVL 48PK	120	48	CC-8	4.43	3.12	750	0.7	1260	2850		$12.05		Reveal®
		100	41036	100A/W 48PK	120	48	CC-8	4.43	3.12	750	0.7	1690	2800		$12.05		Soft White
		100	97761	100A/W/LL-2PK	120	24	CC-8	4.43	3.12	1125	1.0	1600	2800		$12.05		Long Life Soft White
120 Watts																	
PAR38	Med Skirt	120	14501	150PAR/FL/120WM/	120	12	CC-6	5.31		2000		1370	2725	3600		1a, 2a, 2b	Watt-Miser®, Flood, Reduced Wattage
		120	14502	150PAR/SP/120WM/	120	12	CC-6	5.31		2000		1370	2725	9200		1a, 2a, 2b	Watt-Miser®, Spot, Reduced Wattage
150 Watts																	
PAR38	Med Skirt	150	14531	150PAR/FL/EX-120	120	12	CC-6	5.31		2000		1740	2775	3100		1a, 2a, 2b	Flood
		150	14535	150PAR/SP/EX-120	120	12	CC-6	5.31		2000		1740	2775	12000		1a, 2a, 2b	Spot
Airport																	
30 Watts																	
T10	Med PF	30	23294	6.6A/T10/1P	4.5	60	C-2V	3.90	1.50	1000		400					Clear
		45	23295	6.6A/T10P	6.8	60	C-2V	3.60	1.50	1000		675					Clear
40 Watts																	
T10	Med PF	40	15921	40T10P	120	60	CC-2V	3.90	1.50	1000		400					Clear
200 Watts																	
T14	Med PF	200	23298	6.6A/T14P		24	C-13	5.75	2.18			4900					Clear
620 Watts																	
PS40	Mogul PF	620	21950	620PS40P	120	24	C-9	10.06	5.68	3000		11200					Clear
		620	21952	620PS40P	130	24	C-9	10.06	5.68	3000		11200					Clear
Landscape Lighting																	
4 Watts																	
T5	Wedge	4	71479	901/LAND/BP2	12	48	C-2R	1.49	0.08	500		36					
7 Watts																	
T5	Wedge	7	71480	918/LAND/BP2	12	48	C-2R	1.49	0.08	500		82					
11 Watts																	
T5	Wedge	11	71481	923/LAND/BP2	12	48	C-2R	1.49	0.08	500		157					
Decorative																	
3 Watts																	
CA10	Cand	3	73254	3CAC/FF/CD1-6PK	120	6		4.13		2000							Flicker Flame

* Based on 3 hours per day use.
** Based on 3 hours per day use, $0.11 per Kwh

For the most up-to-date product information, see www.gelighting.com. To convert inches to millimeters, multiply by 25.4.
All warning and caution notices found at the end of this section (page 1-20).

Bulb Shape	Base	Watts	Order Code	Description	Volts	Case Qty	Filament Design	MOL (in)	LCL (in)	Rated Life (hrs)	Rated Life (yrs*)	Lumens Initial	Color Temp K	CBCP	Annual Operating Costs**	Warning and Caution Notices	Additional Information
Decorative (continued)																	
15 Watts																	
B8	Cand	15	75257	15BC/8/CF2/PK5-MP	120	5	C-7A	3.87		1500	1.4	105	2500		$1.81		Blunt Tip, Ceiling Fan, Vibration Resistant, Multipurpose Deco
B10	Cand	15	74033	15BC/RVL/CF-T4/6	120	6	C7-A	3.87		1500	1.4	80	2550		$1.81		Reveal®, Blunt Tip, Ceiling Fan, Vibration Resistant
		15	74974	15BC10/CF/CD2-MPD	120	5	C7-A	3.87		1500	1.4	95	2500		$1.81		Blunt Tip, Ceiling Fan, Vibration Resistant, Multipurpose Deco
CA8	Cand	15	48396	15CAC CD2 6PK	120	30	C-7A	4.12		1500	1.4	115	2500		$1.81		Bent Tip
F10	Cand	15	48395	15FC CD2 6PK	120	30	C-7A	4.37		1500	1.4	105	2500		$1.81		Clear-Chandelier
		15	75256	15FC/AU/CF2/5-MP	120	5	C-7A	4.37		1500	1.4	105	2300		$1.81		Auradescent, Flame Tip, Ceiling Fan, Vibration Resistant, Multipurpose Deco
		15	48394	15FC/AU CD2 6PK	120	30	C-7A	4.37		1500	1.4	105	2300		$1.81		Auradescent, Flame Tip
25 Watts																	
B8	Cand	25	75258	25BC8/CF2/PK5-MP	120	5	C-7A	3.87		1500	1.4	160	2500		$3.01		Blunt Tip, Ceiling Fan, Vibration Resistant, Multipurpose Deco
B10	Cand	25	74979	25BC10RVL/CF2-MP	120	5	C-7A	3.87		1500	1.4	135	2550		$3.01		Reveal®, Blunt Tip, Ceiling Fan, Vibration Resistant, Multipurpose Deco
		25	74978	25BC10/CF/CD2-MP	120	5	C-7A	3.87		1500	1.4	155	2500		$3.01		Blunt Tip, Ceiling Fan, Vibration Resistant, Multipurpose Deco
		25	15787	25BC 25PK	120	200	C-7A	3.75		1500	1.4	220	2500		$3.01		Clear, Blunt Tip
		25	48700	25BC/RVL CD2	120	30	C-7A	3.75		1500	1.4	150	2550		$3.01		Reveal®, Blunt Tip
	Med	25	22756	25BM CD2	120	60	C-7A	4.62		1500	1.4	170	2500		$3.01		Clear, Blunt Tip
B13	Med	25	75322	25BM/C33/CF2-TP5	120	5	C-9	4.62		1500	1.4	135	2500		$3.01		Clear Ceiling Fan, Chandelier, Multipurpose Deco
CA10	Cand	25	15777	25CAC 25PK	120	200	CC-2V	4.12		1500	1.4	220	2500		$3.01		Clear, Bent Tip
		25	76234	25CAC/CL/CD4-MPD	120	4	CC-2V	4.12		1500	1.4	220	2500		$3.01		Clear, Bent Tip
		25	66104	25CAC/CL/CD2-MPD	120	4	CC-2V	4.12		1500	1.4	220	2500		$3.01		Clear, Bent Tip
		25	76235	25CAC/F/CD4-MPD	120	4	CC-2V	4.12		1500	1.4	155	2500		$3.01		White, Bent Tip
		25	66105	25CAC/F/CD2-MPD	120	4	CC-2V	4.12		1500	1.4	215	2500		$3.01		White, Bent Tip
		25	40045	25CAC/L	120	120	CC-2V	4.12		4000	3.7	210	2500		$3.01		Clear, Bent Tip, Brass Base, LL
		25	16365	25CAC/L/BB-CD4	120	24	CC-2V	4.12		3000	2.7	210	2500		$3.01		Clear, Bent Tip
F15	Med	25	75337	25FM/C/CF2-TP4	120	4	C-9	4.37		1500	1.4	170	2400		$3.01		Clear, Flame Ceiling Fan
		25	75339	25FM/A/CF2-TP4	120	4	C-9	4.37		1500	1.4	120	2400		$3.01		Ceiling Fan
		25	75340	25FM/AU/CF2-TP4	120	4	C-9	4.37		1500	1.4	170	2400		$3.01		Auradescent Ceiling Fan
		25	75338	25FM/W/CF2-TP4	120	4	C-9	4.37		1500	1.4	140	2400		$3.01		White, Ceiling Fan
G16.5	Cand	25	11303	25GC 12PK	120	120	CC-2V	3.00		1500	1.4	220	2500		$3.01	5e, 9d	Clear, Globe, BDTH
		25	17722	25GC CD2	120	60	CC-2V	3.00		1500	1.4	195	2500		$3.01	5e, 9d	Clear, Globe, BDTH
		25	48703	25GC/RVL CD2	120	30	CC-2V	3.00		1500	1.4	145	2525		$3.01	5e, 9d	Reveal®, Globe, BDTH
		25	72800	25GC/CL/CD2-4PK	120	4	CC-2V	3.00		1500	1.4	195	2500		$3.01	5e, 9d	Clear, Globe, BDTH
		25	72801	25GC/AU/CD2 4PK	120	4	CC-2V	3.00		1500	1.4	220	2500		$3.01	5e, 9d	Auradescent Globe, BDTH
		25	44412	25GC/W PQ2/6	120	30	CC-2V	3.00		1500	1.4	180	2500		$3.01	5e, 9d	White, Globe, BDTH
		25	39679	25GC/W 12PK	120	120	CC-2V	3.00		1500	1.4	180	2500		$3.01	5e, 9d	White, Globe, BDTH
		25	15790	25GC 25PK	120	100	CC-2V	3.00		1500	1.4	195	2500		$3.01	5e, 9d	Clear, Globe, BDTH
G16.5	Med	25	31106	25GM/CL-PQ2/6	120	30	CC-2V	3.00		1500	1.4	160	2500		$3.01	5e, 9d	Clear, Globe, BDTH
		25	31107	25GM/W-PQ2/6	120	30	CC-2V	3.00		1500	1.4	180	2500		$3.01	5e, 9d	Clear, Globe, BDTH
G25	Med	25	12982	25G25/W 6PK	120	6	CC-6	4.50		1500	1.4	180	2500		$3.01	5e, 9d	Clear, Globe, BDTH
		25	12983	25G25 6PK	120	6	CC-6	4.50		1500	1.4	190	2500		$3.01	5e, 9d	Clear, Globe, BDTH
		25	25546	25G25/W CPK	120	24	CC-6	4.50		1500	1.4	180	2500		$3.01	5e, 9d	White, Globe, BDTH
		25	25545	25G25 CPK	120	24	CC-6	4.50		1500	1.4	190	2500		$3.01	5e, 9d	Clear, Globe, BDTH

* Based on 3 hours per day use.
** Based on 3 hours per day use, $0.11 per Kwh

For the most up-to-date product information, see www.gelighting.com. To convert inches to millimeters, multiply by 25.4.
All warning and caution notices found at the end of this section (page 1-20).

Bulb Shape	Base	Watts	Order Code	Description	Volts	Case Qty	Filament Design	MOL (in)	LCL (in)	Rated Life (hrs)	Rated Life (yrs*)	Lumens Initial	Color Temp K	CBCP	Annual Operating Costs**	Warning and Caution Notices	Additional Information
Decorative (continued)																	
40 Watts																	
B8	Cand	40	75259	40BC8/CF2/PK5-MP	120	5	C-7A	3.87		1500	1.4	300	2500		$4.82		Clear, Blunt Tip, Ceiling Fan, Multipurpose Deco
B10	Cand	40	74035	40BC/RVL/CF-T4/6	120	6	C-7A	3.87		1500	1.4	230	2550		$4.82		Reveal®, Clear, Blunt Tip, Ceiling Fan
		40	75034	40BC10RVL/CF2-MP5	120	5	C-7A	3.87		1500	1.4	230	2550		$4.82		Reveal®, Clear, Blunt Tip, Ceiling Fan, Multipurpose Deco
		40	75033	40BC10/CF/CD2-MP	120	5	C-7A	3.87		1500	1.4	280	2500		$4.82		Clear, Blunt Tip, Multipurpose Deco
		40	15788	40BC 25PK	120	200	CC-2V	3.75		1500	1.4	370	2500		$4.82		Clear, Blunt Tip
		40	48701	40BC/RVL CD2	120	30	CC-2V	3.75		1500	1.4	230	2550		$4.82		Reveal® Clear, Blunt Tip
B10	Med	40	12993	40BM CD2	120	60	C-9	3.75		1500	1.4	380	2500		$4.82		Clear, Blunt Tip
		40	48699	40BM/RVL CD2	120	30	C-9	3.75		1500	1.4	285	2550		$4.82		Reveal®, Blunt Tip
B13	Med	40	75317	40BFM/CF2/PK4-MP	120	4	C-9	4.62		1500	1.4	350	2500		$4.82		Facet, Ceiling Fan
		40	72780	40BM/RVL/CD2-4PK	120	4	C-9	4.62		1500	1.4	285	2550		$4.82		Clear, Bent Tip
CA10	Med	40	75335	40CAM/CF6/PK5-MP	120	5	CC-2V	4.56		1500	1.4	350	2500		$4.82		Clear, Bent Tip, Multipurpose Deco
		40	76230	40CAM/CL/CD4-MPD	120	4	CC-2V	4.56		1500	1.4	330	2500		$4.82		Clear, Bent Tip
		40	66109	40CAM/CL/CD2-MPD	120	4	CC-2V	4.56		1500	1.4	330	2500		$4.82		Clear, Bent Tip
		40	48342	40CAM/L/BB CD4	120	30	CC-2V	4.56		3000	2.7	360	2500		$4.82		Post Light
		40	22813	40CAM/LL/BB CD2	120	30	CC-2V	4.56		3000	2.7	360	2500		$4.82		Clear, Bent Tip, Long Life, Brass Base
CA10	Cand	40	15778	40CAC 25PK	120	200	CC-2V	4.12		1500	1.4	370	2500		$4.82		Clear, Bent Tip
		40	76236	40CAC/CL/CD2-MPD	120	4	CC-2V	4.12		1500	1.4	370	2500		$4.82		Clear, Bent Tip
		40	76237	40CAC/CL/CD4-MPD	120	4	CC-2V	4.12		1500	1.4	370	2500		$4.82		Clear, Bent Tip
		40	76238	40CAC/F/CD4-MPD	120	4	CC-2V	4.12		1500	1.4	360	2500		$4.82		White, Bent Tip
		40	66106	40CAC/F/CD2-MPD	120	4	CC-2V	4.12		1500	1.4	360	2500		$4.82		White, Bent Tip
		40	48341	40CAC/L/BB-CD4	120	30	CC-2V	4.12		3000	1.4	360	2500		$4.82		Clear, Bent Tip, Brass Base, Long Life
F15	Med	40	75341	40FM/C/CF2-TP4	120	4	C-6	4.37		1500	1.4	350	2500		$4.82		Clear, Flame, Ceiling Fan, Vibration Resistant
		40	75343	40FM/AU/CF2-TP4	120	4	C-6	4.37		1500	1.4	350	2500		$4.82		Auradescent, Flame, Ceiling Fan, Vibration Resistant
		40	75342	40FM/W/CF2-TP4	120	4	C-6	4.37		1500	1.4	315	2500		$4.82		White, Flame, Ceiling Fan, Vibration Resistant
		40	75344	40FM/A/CF2-TP4	120	4	C-6	4.37		1500	1.4	140	2500		$4.82		Amber, Ceiling Fan, Vibration Resistant
G16.5	Cand	40	14958	40GC 12PK	120	120	CC-2V	3.00		1500	1.4	320	2500		$4.82	5e, 9d	Clear, Globe, BDTH
		40	17730	40GC CD2	120	60	CC-2V	3.00		1500	1.4	320	2500		$4.82	5e, 9d	Clear, Globe, BDTH
		40	44414	40GC/W PQ2/6	120	30	CC-2V	3.00		1500	1.4	290	2500		$4.82	5e, 9d	White, Globe, BDTH
		40	72802	40GC/CL/CD2-4PK	120	4	CC-2V	3.00		1500	1.4	320	2500		$4.82	5e, 9d	Clear, Globe, BDTH
		40	72803	40GC/AU/CD2-4PK	120	4	CC-2V	3.00		1500	1.4	370	2500		$4.82	5e, 9d	Auradescent, Globe, BDTH
		40	48704	40GC/RVL CD2	120	30	CC-2V	3.00		1500	1.4	240	2550		$4.82	5e, 9d	Reveal®, Globe, BDTH
		40	72209	40GC/W/CD2-4PK	120	4	CC-2V	3.00		1500	1.4	290	2500		$4.82	5e, 9d	White, Globe, BDTH
		40	48705	40GC/W/RVL CD2	120	30	CC-2V	3.00		1500	1.4	220	2550		$4.82	5e, 9d	Reveal® White, Globe, BDTH
G16.5	Med	40	31109	40GM/CL-PQ2/6	120	30	CC-2V	3.00		1500	1.4	310	2500		$4.82	5e, 9d	Clear, Globe, BDTH
		40	31110	40GM/W-PQ2/6	120	30	CC-2V	3.00		1500	1.4	330	2500		$4.82	5e, 9d	White, Globe, BDTH
G25	Med	40	12979	40G25/W 6PK	120	6	CC-6	4.50		1500	1.4	370	2500		$4.82	5e, 9d	White, Globe, BDTH
		40	12980	40G25 6PK	120	6	CC-6	4.50		1500	1.4	410	2500		$4.82	5e, 9d	Clear, Globe, BDTH
		40	48694	40G25C/RVL PQ1/6	120	6	CC-6	4.50		1500	1.4	265	2550		$4.82		Reveal®
		40	48695	40G25W/RVL PQ1/6	120	6	CC-6	4.50		1500	1.4	250	2550		$4.82		Reveal®
		40	25547	40G25/W CPK	120	24	CC-6	4.50		1500	1.4	370	2500		$4.82	5e, 9d	White, Globe, BDTH
		40	25548	40G25 CPK	120	24	CC-6	4.50		1500	1.4	410	2500		$4.82	5e, 9d	Clear, Globe, BDTH
G40	Med	40	36191	40G40/W 6PK	120	6	CC-6	6.93		2500	2.3	395	2500		$4.82	5e, 9d	White, Globe, BDTH

* Based on 3 hours per day use.
** Based on 3 hours per day use, $0.11 per Kwh

For the most up-to-date product information, see www.gelighting.com. To convert inches to millimeters, multiply by 25.4.
All warning and caution notices found at the end of this section (page 1-20).

Bulb Shape	Base	Watts	Order Code	Description	Volts	Case Qty	Filament Design	MOL (in)	LCL (in)	Rated Life (hrs)	Rated Life (yrs*)	Lumens Initial	Color Temp K	CBCP	Annual Operating Costs**	Warning and Caution Notices	Additional Information
Decorative (continued)																	
60 Watts																	
B10	Cand	60	76229	60BC10/CF/CD2-MP	120	4	C-7A	3.87		1500	1.4	540	2500		$7.23		Clear, Blunt Tip, MultiPurpose Deco
		60	48714	60BC/RVL CD2	120	30	C-7A	3.87		1500	1.4	490	2550		$7.23		Reveal®
		60	74036	60BC/RVL/CF-T4/6	120	6	C-7A	3.75		1500	1.4	455	2550		$7.23		Reveal® Clear, Ceiling Fan, Blunt Tip
		60	75201	60BC10RVL/CF2-MP	120	6	C-7A	3.75		1500	1.4	455	2550		$7.23		Reveal® Clear, Ceiling Fan, Blunt Tip
B13	Med	60	48713	60BM/RVL CD2	120	30	C-9	4.62		1500	1.4	485	2650		$7.23	2c, 9i	Reveal®, Blunt Tip
		60	72781	60BM/RVL/CD2-4PK	120	4	C-9	4.62		1500	1.4	485	2650		$7.23	2c, 9i	Reveal®, Blunt Tip
CA10	Cand	60	15781	60CAC 25PK	120	200	CC-2V	4.12		1500	1.4	650	2500		$7.23		Clear, Bent Tip
		60	76239	60CAC/CL/CD4-MPD	120	4	CC-2V	4.12		1500	1.4	650	2500		$7.23		Clear, Bent Tip
		60	66107	60CAC/CL/CD2-MPD	120	4	CC-2V	4.12		1500	1.4	640	2500		$7.23		Clear, Bent Tip
		60	76240	60CAC/F/CD4-MPD	120	4	CC-2V	4.12		1500	1.4	640	2500		$7.23		White, Bent Tip
		60	66108	60CAC/F/CD2-MPD	120	4	CC-2V	4.12		1500	1.4	640	2500		$7.23		White, Bent Tip
G16.5	Cand	60	72777	60GC/CD2-4PK	120	4	CC-2V	3.00		1500	1.4	600	2500		$7.23	5e, 9d	Clear, Globe, BDTH
		60	23091	60GC CD2	120	60	CC-2V	3.00		1500	1.4	600	2500		$7.23	5e, 9d	Clear, Globe, BDTH
		60	44723	60GC/W PQ2/6	120	30	CC-2V	3.00		1500	1.4	530	2500		$7.23	5e, 9d	White, Globe, BDTH
G40	Med	60	14187	60G40 6PK	120	6	CC-6	6.93		2500	2.3	660	2600		$7.23		Clear, Globe
		60	49780	60G40/W 6PK	120	6	CC-6	6.93		2500	2.3	660	2600		$7.23		White, Globe
		60	16741	60G40/W CPK	120	24	CC-6	6.93		2500	2.3	660	2600		$7.23		White, Globe
75 Watts																	
E17	Med	75	73289	75E17/TF-4PK	120	4	CC-6	5.00		4000		825					
		75	28917	75E17/TF-PK4	120	20	CC-6			4000	3.7	825					
G40	Med	75	36193	75G40/W 6PK	120	6	CC-6	6.93		2500	2.3	870	2600		$9.03		White, Globe
100 Watts																	
F20	Med	100	44540	100F20/TF PQ1/6	120	30	CC-9	5.00		3000		900					Post Light, Teflon® Coated, Saf-T-Gard® BB
G40	Med	100	16742	100G40/W CPK	120	24	CC-6	6.93		2500	2.3	1260	2700		$12.05		White, Globe
		100	49781	100G40/W 6PK	120	6	CC-6	6.93		2500	2.3	1260	2700		$12.05		White, Globe
150 Watts																	
G40	Med	150	16585	150G40/W	120	24	CC-6	6.93		2500	2.3	2130	2800		$18.07		White, Globe
Portable Lighting Products																	
R30	Med	65	44848	PLK 1 UNIT	120	4	CC-6	5.37		2000						2a, 5e, 9k	Plant Light Kit includes one 75R30/PL Plant Light lamp, UL listed holder and information booklet.
Contractor Packs																	
G40	Med	60	16741	60G40/W CPK	120	24	CC-6	6.93		2500	2.3	660	2600		$7.23		White, Globe
		100	16742	100G40/W CPK	120	24	CC-6	6.93		2500	2.3	1260	2700		$12.05		White, Globe
G25	Med	25	25546	25G25/W CPK	120	24	CC-6	4.50		1500	1.4	180	2500		$3.01	5e, 9d	White, Globe, BDTH
		25	25545	25G25 CPK	120	24	CC-6	4.50		1500	1.4	190	2500		$3.01	5e, 9d	Clear, Globe, BDTH
		40	25547	40G25/W CPK	120	24	CC-6	4.50		1500	1.4	370	2500		$4.82	5e, 9d	White, Globe, BDTH
		40	25548	40G25 CPK	120	24	CC-6	4.50		1500	1.4	410	2500		$4.82	5e, 9d	Clear, Globe, BDTH

* Based on 3 hours per day use.
** Based on 3 hours per day use, $0.11 per Kwh

For the most up-to-date product information, see www.gelighting.com. To convert inches to millimeters, multiply by 25.4.
All warning and caution notices found at the end of this section (page 1-20).

Warning and Caution Notices

1

⚠ WARNING

Risk of electric shock

a. Turn off power before inspection, installation or removal

2

⚠ WARNING

Risk of fire

a. Keep combustible materials away from lamp
b. Use in fixture rated for this product
c. Use in fixture rated for this product – see instructions
d. Operate base down to horizontal only
e. Keep away from bed coverings, drapes and other combustible materials
f. Do not use in enclosed fixture or with lamp shade
g. Use in a high intensity fixture rated for this product
h. Do not use as a night light
i. Burning position base down only

3

⚠ WARNING

Lamp emits IR radiation which may cause eye injury

a. Use in fixture approved for this product
b. Do not use on infant, disabled, sleeping, or unconscious person/ animal unable to avoid potential injury

4

⚠ WARNING

Pressurized lamp – unexpected rupture may cause injury, fire, or property damage

a. Use eye protection when handling lamp
b. Avoid direct water/liquid contact
c. Use in enclosed fixture rated for this product
d. Operate lamp only in specified position

5

⚠ WARNING

Unexpected lamp rupture may cause injury, fire, or property damage

a. Do not exceed rated voltage
b. Avoid direct water/liquid contact
c. Use in enclosed fixture rated for this product
d. Do not use lamp if outer glass is scratched or broken
e. Avoid direct water, liquid, or metal contact

6

⚠ WARNING

Risk of burn

a. Do not touch operating lamp

7

⚠ CAUTION

Risk of burn

a. Allow lamp to cool before handling
b. Allow lamp/fixture to cool before handling
c. Do not touch operating lamp

8

⚠ CAUTION

Lamp may shatter and cause injury if broken

a. Do not use excessive force when installing lamp

9

Operating Instructions

a. Burning position – base up
b. Burning position – horizontal
c. Burn base down only
d. Burn base down to horizontal
e. For best performance burn lamp within 45 degrees of vertical base up
f. For best performance burn within 45 degree of base down to horizontal
g. For best performance operate base up within 30° of vertical
h. For best performance burn base down
i. Do not burn in base up position
j. To produce all three levels of light, this lamp should be tightened firmly, but not forcibly, in the socket to assure that all contacts are connected
k. Should not be used in equipment where the base lamp will exceed 550°F (260°C)
l. Will operate in any burning position, but fixed-socket usage other than base up, or continuous burning in any position in ambient temperatures above 150°F (66°C), may result in some loss of protective coating
m. Reflectors and accessories may raise bulb temperature
n. For use with heat-resistant connector supported by bulb rim or metal shell of base
o. For best performance replace lamp if it blisters or darkens

Cross-Reference

GE Description	Osram/Sylvania Description	Philips Description
Order This GE Lamp	If you currently use these lamps	
Incandescent Lamps		
3S6/5 130V	3S6/5 130V	3S6/5 120-130V
4C7	4C7/BL/2PK	BC-4C7
4C7/W	4C7/W/2PK 120V	BC4C7/W
10S11N	10S11N/CL	10S11N
10S11N/F	10S11/IF	10S11N/IF
15S14/GR/CL 130V	15S14/CL 130V	–
40S11N/1/F	40S11/N/CF 120V	40S11N/F 120V
40R14/N/CD	40R14/N/RP	40R14/N
40T6 1/2	40T6.5/CL	40T6-1/2 120V
40T8	40T8	40T8
40T10	40T10	40T10
60T10F/CD	60T10/CF	60T10/641F
38A 130V	38A/CVP 130V	38A 120V
38A/CL 130V	not available in 130V	38A/CL 130V
40A15	40A15	40A15
40A 48PK	40A/CVP 130V	40A 130V
50A19/RS/SH	50A/RS/SL	50A/RS/TF 120V
50/150	50/150A/W	50/150T/SW
57A 130V	57A/CVP 130V	57A 130V
57A/CL 130V	57A/CL 130V	57A/CL 130V
60A15	60A15	60A15
60A 48PK	60A/CVP 130V	60A19/35
60A/RS 130V	60A/RS/2/RP 130V	–
60A/RS/STG	60A/RS/SL/RP 120V	–
60A/PL	60A/GRO	60A/AGRO
65R30FL/LL	–	65BR30/FL/LL
65R30/SP/LL	–	65BR30/SP/LL
71A 130V	71A/CVP 130V	71A 120V
71A/CL 130V	not available in 130V	71A/CL 130V
75A 48PK	75A/CVP 130V	75A
75A/RS/130	75A/RS/2/RP 130V	–
75A/RS/STG	75A21/RS/SL/RP 130V	75A/RH/TG 120-130V
95A 130V	95A/CVP 130V	95A 120V
95A/CL 130V	not available in 130V	95A/CL 130V
100A 48PK	100A/CVP 130V	100A 130V
100A/RS 130V	100A/RS/2/RP 130V	–
100A/RS/STG	100A/RS/SL/RP 120V	100A/RS/VS/BR/TG 120-130V
100A23	100A23 12V	100A 12V
150A21/RS	150A23/RS 130V	–
150A21/RS/STG	–	150A/35/RS/BR/TG 120-130V
150PS25/RS/STG	150PS25/RS/SL 120V	–
200PS30/RS/23/STG	200PS/RS/SL 120V	200PS30/RS/TF 120V
250R40/10	250R40/10	250R40/HR
300M	300M/CL	300-120V CLR PS30
300M/IF	300M/IF	300M/PS30IF 130V
15BC	15B10C/T	15BA9C
15FC	15FC	15F10C
25BC	25B10C/T	25B10-1/2C
25BM	25B10	25B13
25CAC	25B10C	25BA9C/CL
25CAC/F	25B10C/W	25BA9C/F
25CAC/L	25B10C/DL	25BA9C/4M
25CAM	–	25BA9-1/2

GE Description	Osram/Sylvania Description	Philips Description
Order This GE Lamp	If you currently use these lamps	
Incandescent Lamps (continued)		
25FM/CF	–	–
25GC	25G16.5C	25G16-1/2C
25GM	25G16.5	25G16-1/2
25G25	25G25	25G25
40BC	40B10C/T	40B10-1/2C
40BM	40B10	40B13
40CAC	40B10C	40BA9C/CL
40CAC/F	40B10C/F	40BA9C/F
40CAC/L	–	40BA9C/4M
40CAM	–	40BA9-1/2
40CAM/L	–	40BA9-1/2/LL
40FM/CF	–	–
40GC	40G16.5C	40G16-1/2C
40GM	40G16.5	40G16-1/2
40G25	40G25	40G25
60BC	60B10C/T	60B10-1/2C
60BM	60B10	60B13
60CAC	60B10C	60BA9C/CL
60CAC/F	60B10C/F	60BA9C/F
60CAM	–	60BA9-1/2
60FM/CF	–	–
60GC	60G16.5C	60G16-1/2C
60GM	60G16.5	60G16-1/2
60G25	60G25	60G25

Notes

Halogen Lamps

Bulb Identification

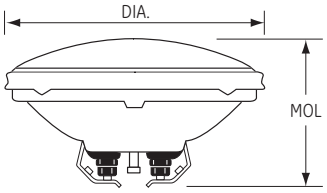

DIA. in.: Diameter of bulb at widest point.

MOL in.: Maximum Overall Length including base or pins.

LCL in.: Distance between the center of the filament and the Light Center Length reference plane.

Note: Lamp drawings are not drawn to scale. Be sure to check size and dimension information when identifying each lamp.

To convert inches to millimeters, multiply the dimension (in inches) by 25.4 (i.e. 1.5" x 25.4 = 38.1 mm).

Filament Identification

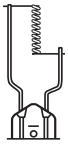

C-8
CC-8

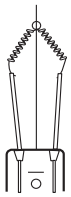

C-2V
CC-2V

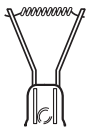

C-6
CC-6

C-8
CC-8

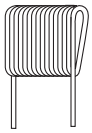

C-6
Oval

Base Identification

2-Pin
(Round)
GX5.3

Can DC Bay

2-Pin
GY6.35

Recessed
Single
Contact
R7s

Screw
Terminals

4" Leads

1" Ribbon
Leads

6" Flex
Leads

2-Pin
GU4

2-Pin
GU5.3

2-Pin
G4

Turn & Lock
GU7

GU10

G8

G9

2-Pin Pf

Min Screw
E10

DC Bay
BA15d

Min Cand
E11

Med Screw
E26

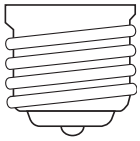

Mog Screw
E39

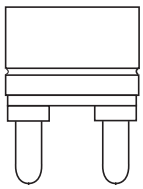

Mogul
BiPost
G38

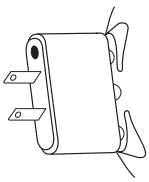

Ext. Mog
End Pr
GX16d

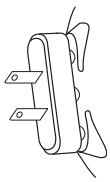

Mog End
PR
GX16d

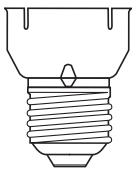

Med
Skirted
E26/50x39

Introduction

Halogen lamps provide a small, white light source with excellent color rendering. Unlike standard incandescent lamps, halogen lamps use a halogen gas which allows the bulbs to burn longer without sacrificing light output.

Compared to incandescent lamps, halogen lamps provide:

- Crisp, white light
- Compact size
- Long life
- Excellent beam control
- High lumen maintenance

Product Information

PAR38 vs. Standard Halogen

HIR™ Plus (PAR38) (pg 2-5)

- Up to 36% in energy savings
- Up to 50% longer life – 4200 hours

Standard Halogen (PAR38) (pg 2-5)

- Crisp, white light
- Life – 2000 hours

Halogen Compact PAR Lamps

Compact HIR™ PAR30 (pg 2-6)

- Long life – 4000 hours

Compact PAR30 Long Neck (pg 2-6)

- Energy-efficient replacement for R30 lamps
- Ideal for recessed fixtures

Compact PAR Halogen (PAR30/PAR20) (pg 2-6)

- Small size for "low profile" fixture
- Energy-efficient replacement for R20/R30 lamps
- Long life – 3000 hours

MR

Turn & Lock (TAL) ConstantColor® (MR16) (pg 2-8)

- User-friendly base...easy to install and remove
- Over 90% maintained light over life
- Excellent color maintenance
- Suitable for use in open fixtures

ConstantColor® Precise™ Cover Glass (MR16) (pg 2-9)

- Cover glass lens protects bulb from dust and dirt
- Suitable for use in open fixtures

ConstantColor® Precise™ (MR16) (pg 2-9)

- Precise beam control
- Excellent color maintenance
- Over 90% maintained light output over life
- Long life – up to 6000 hours (50-watt)

Precise™ Cover Glass IR (MR16) (pg 2-9)

- Energy-saving MR16
- 5000 hour lamp life

Standard MR (MR16/MR11) (pg 2-10)

- Small size for "low profile" look
- Crisp, white light

Linear Quartz

Linear Quartzline® HIR™ (pg 2-11)

- 30%-40% energy cost savings vs. standard quartz lamps
- 95% maintained light output over life
- Cooler operation increases fixture life

Headings in this catalog section

The following terms and descriptions can help you when checking Halogen lamp specifications and when ordering products. Within each product line, lamps are divided into families. Within families, lamps are listed by wattage. In each of these groups, lamps are listed alphabetically by bulb shape.

LCL (in): Distance between the center of the filament and the Light Center Length reference plane, in inches.

MOL (in): Maximum Overall Length in inches.

Rated Life (hours): Life (as defined by FTC Lamp Label Rules) is rated life in hours.

Filament Design: Filaments are designated by a letter combination in which C is a coiled wire filament, CC is a coiled wire that is itself wound into a larger coil, and SR is a straight ribbon filament. Numbers represent the type of filament-support arrangement.

Rated Life (years): Life (as defined by FTC Lamp Label Rules) is rated life in years.

Lumens Initial: Light output (as defined by FTC Lamp Label Rules) is rated lumens.

Energy Used – Nominal Watts: Energy Used (as defined by FTC Lamp Label Rules). To estimate energy consumption (kWh), multiply watts x hours of use and divide by 1000.

Case Quantity: Number of product units packed in a case.

Initial Color Temperature Kelvins (K): "Warmth" or "Coolness" of the lamp, measured in Kelvins (K). The higher the temperature, the cooler the appearance of the light.

Volts: Lamp data is based on operation at rated voltage.

Approximate CBCP (Center Beam Candlepower): For reflector-type lamps. Center Beam Candlepower is the intensity (candelas) at the center or maximum intensity of the beam.

Order Code: It is important to use this five-digit code when ordering to ensure that you receive the exact product you require.

Warnings and Caution Notices: See page 2-17 for information.

Bulb Shape: Bulb shape followed by its size (the maximum diameter of the bulb expressed in eighths of an inch).

Estimated Annual Operating Costs: Estimated yearly energy cost based on 3 hours/day, $0.11/kWh. Actual cost depends on rates and use.

Base: The type of base.

Lamp Description: The lamp's identification code.

Additional Information Typical application and/or other important information.

Bulb Shape	Base Type	Watts	Order Code	Description	Volts	Case Qty	Filament Type	MOL (in)	LCL (in)	Rated Life (hrs)	Rated Life (yrs*)	Lumens Initial	Initial Color Temp	CBCP	Annual Operating Costs**	Warning and Caution Notices	Additional Information
Halogen Par 38 Lamps																	
Retail HIR™ & Silv-IR																	
PAR38	Med Skirt	50	46168	50PAR/HIR/S/SP10	120	12		5.31		4000		800	2750	140000		1a,2a,4f,9a,10c	Spotlight - Heavy Duty Filament

50 PAR / HIR / SP 10

- 50 — Identifies the lamp's wattage.
- PAR — Identifies the lamp shape and the bulb diameter in eighths of inches.
- HIR — Identifies the lamp type.
- SP — Identifies as Spotlight.
- 10 — Identifies beam angle, code may also include packaging information.

WHEN YOU DON'T KNOW THE LAMP DESCRIPTION

1. Identify bulb shape next to lamp information.
2. Measure bulb diameter using ruler in Appendix section page D-1 to determine width in eighths of an inch.
3. Identify base type using table on page 2-2.
4. Find your lamp in the table containing the bulb shape, size and base, which are all listed by wattage.

Halogen Brand Name Cross-reference

GE	Osram/Sylvania	Philips
HIR™ PLUS	—	Long Life IRC
Standard Halogen PAR	Capsylite® PAR	Masterline™ 2000
Compact PAR	Capsylite® PAR	Masterline™ PAR
Turn & Lock (TAL) ConstantColor®	—	—
ConstantColor® Precise™	Tru-Aim Titan®	Continuum Color®
Precise™ IR	Tru-Aim® IR™	Masterline™ ES IRC
Standard MR16	Tru-Aim®	Continuum®
Halogen A-Line	Capsylite® A-Line (Midbreak)	Halogena®

ATTENTION: This brand-name cross reference chart is provided only as a quick reference. Other lamp company brand listings may only represent a near equivalent, versus an identical match to GE Lighting brands. Individual lamp manufacturers' performance specifications should be consulted. Lamp performance may be affected by environmental conditions, and/or other auxiliary equipment.

Halogen PAR 38 Lamps

Bulb Shape	Base Type	Watts	Order Code	Description	Volts	Case Qty	Filament Type	MOL (in)	LCL (in)	Rated Life (hrs)	Rated Life (yrs*)	Initial Lumens	Initial Color Temp	CBCP	Annual Operating Costs**	Warning and Caution Notices	Additional Information
HIR™ Plus(+)																	
PAR38	Med Skirt	45	90512	45PAR/HIR+/SP10	120	12	CC-8	5.31		4200	3.8	870	2750	14100	$5.42	1a,2a,4f,9a,10c	Spotlight
		45	90513	45PAR/HIR+/FL25	120	12	CC-8	5.31		4200	3.8	870	2750	3500	$5.42	1a,2a,4f,9a,10c	Floodlight
		48	90515	48PAR/HIR+/SP10	120	12	CC-8	5.31		4200	3.8	970	2750	15500	$5.78	1a,2a,4f,9a,10c	Spotlight
		48	90519	48PAR/HIR+/FL25	120	12	CC-8	5.31		4200	3.8	970	2750	3800	$5.78	1a,2a,4f,9a,10c	Floodlight
		50	62713	50PARHIR+3KSP10T	120	6	CC-8	5.31		2600	2.4	900	2800	13700	$6.02	1a,2a,4f,9a,10c	Spotlight
		50	62714	50PARHIR+3KFL25T	120	6	CC-8	5.31		2600	2.4	900	2800	3400	$6.02	1a,2a,4f,9a,10c	Floodlight
		50	66283	50PARHIR+3KS10P2	120	3	CC-8	5.31		2600	2.4	900	2800	13700	$6.02	1a,2a,4f,9a,10c	Spotlight
		50	66284	50PARHIR+3KF25P2	120	3	CC-8	5.31		2600	2.4	900	2800	3400	$6.02	1a,2a,4f,9a,10c	Floodlight
		55	71446	55PAR/HIR+/SP10	120	12	CC-8	5.31		4200	3.8	1120	2750	17500	$6.62	1a,2a,4f,9a,10c	Spotlight
		55	71598	55PAR/HIR+/FL25	120	12	CC-8	5.31		4200	3.8	1120	2750	4100	$6.62	1a,2a,4f,9a,10c	Floodlight
		55	69819	55PAR/HIR+/WFL	120	12	CC-8	5.31		4200	3.8	1120	2750	1200	$6.62	1a,2a,4f,9a,10c	Wide Floodlight
		60	90520	60PAR/HIR+/SP10	120	12	CC-8	5.31		4200	3.8	1260	2800	19000	$7.23	1a,2a,4f,9a,10c	Spotlight
		60	90529	60PAR/HIR+/FL25	120	12	CC-8	5.31		4200	3.8	1260	2800	4700	$7.23	1a,2a,4f,9a,10c	Floodlight
		67	90601	67PAR/HIR+/SP10	120	12	CC-8	5.31		4200	3.8	1500	2750	22000	$8.07	1a,2a,4f,9a,10c	Spotlight
		67	90602	67PAR/HIR+/FL25	120	12	CC-8	5.31		4200	3.8	1500	2800	5000	$8.07	1a,2a,4f,9a,10c	Floodlight
		70	68979	70PARHIR+3KS10P1	121	6	CC-8	5.31		3000	2.7	1305	19000	2850	$8.43	1a,2a,4f,9a,10c	Spotlight
		70	68980	70PARHIR+3KS8P1	122	6	CC-8	5.31		3000	2.7	1305	26000	2850	$8.43	1a,2a,4f,9a,10c	Narrow Spotlight
		70	68978	70PARHIR+3KF25P1	123	6	CC-8	5.31		3000	2.7	1305	4500	2850	$8.43	1a,2a,4f,9a,10c	Floodlight
		80	66302	80PARHIR+3KS10P1	120	6	CC-8	5.31		3000	2.7	1600	2900	2270	$9.64	1a,2a,4f,9a,10c	Spotlight
		80	66303	80PARHIR+3KF25P1	120	6	CC-8	5.31		3000	2.7	1600	2900	5200	$9.64	1a,2a,4f,9a,10c	Floodlight
		80	66306	80PARHIR+3KS10P2	120	3	CC-8	5.31		3000	2.7	1600	2900	22700	$9.64	1a,2a,4f,9a,10c	Spotlight, Twin Pack
		80	66307	80PARHIR+3KF25P2	120	3	CC-8	5.31		3000	2.7	1600	2900	5200	$9.64	1a,2a,4f,9a,10c	Floodlight, Twin Pack
		83	90605	83PAR/HIR+/SP10	120	12	CC-8	5.31		4000	3.8	2030	2850	30000	$10.00	1a,2a,4f,9a,10c	Spotlight
		83	90606	83PAR/HIR+/FL25	120	12	CC-8	5.31		4200	3.8	2030	2850	7000	$10.00	1a,2a,4f,9a,10c	Floodlight
		90	62715	90PARHIR+3KSP10T	120	6	CC-8	5.31		3000	2.7	1900	2900	26500	$10.84	1a,2a,4f,9a,10c	Spotlight
		90	62716	90PARHIR+3KFL25T	120	6	CC-8	5.31		3000	2.7	1900	2900	6200	$10.84	1a,2a,4f,9a,10c	Floodlight
		90	66285	90PARHIR+3KS10P2	120	3	CC-8	5.31		3000	2.7	1900	2900	26500	$10.84	1a,2a,4f,9a,10c	Spotlight, Twin Pack
		90	66286	90PARHIR+3KF25P2	120	3	CC-8	5.31		3000	2.7	1900	2900	6200	$10.84	1a,2a,4f,9a,10c	Floodlight, Twin Pack
HIR™ Plus(+) XL																	
PAR38	Med Skirt	53	76142	53PARHIR+XL/SP10	120	12	CC-8	5.31		7800	7.1	940	2700	15000	$6.38	1a,2a,4f,9a,10c	Spotlight, Long Life
		53	76143	53PARHIR+XL/FL25	120	12	CC-8	5.31		7800	7.1	940	2700	3700	$6.38	1a,2a,4f,9a,10c	Floodlight, Long Life
		75	67822	53PARHIR+XLS10P6	120	6	CC-8	5.31		8400	7.7	940	2700	15000	$6.38	1a,2a,4f,9a,10c	Spotlight, Long Life
		75	67823	53PARHIR+XLF25P6	120	6	CC-8	5.31		8400	7.7	940	2700	3700	$6.38	1a,2a,4f,9a,10c	Floodlight, Long Life
		75	68957	53PARHIR+8KF25T2	120	4	CC-8	5.31		8400	7.7	940	2700	3700	$6.38	1a,2a,4f,9a,10c	Floodlight, Long Life Twin Pack
		75	62231	75PARHIR+8KFL25T	120	6	CC-8	5.31		8400	7.7	1500	2750	5000	$9.03	1a,2a,4f,9a,10c	Floodlight, Long Life
		75	62232	75PARHIR+8KSP10T	120	6	CC-8	5.31		8400	7.7	1500	2750	22000	$9.03	1a,2a,4f,9a,10c	Spotlight, Long Life
		75	68956	75PARHIR+8KF25T2	120	4	CC-8	5.31		8400	7.7	1500	2750	5000	$9.03	1a,2a,4f,9a,10c	Floodlight, Long Life Twin Pack
Standard Halogen																	
PAR38	Med Skirt	38	69135	38PARH1500SP10	120	12	CC-8	5.31		1500	1.4	520	6600	2850	$4.58	1a,2a,4f,9a,10c	Spotlight
		38	69136	38PARH1500FL25	120	12	CC-8	5.31		1500	1.4	520	2000	2850	$4.58	1a,2a,4f,9a,10c	Floodlight
		38	60074	38PAR38H1500F25/P2	120	6	CC-8	5.31		1500	1.4	520	2000	2850	$4.58	1a,2a,4f,9a,10c	Floodlight, Twin Pack
		60	62703	60PARH1500SP10TP	120	6	CC-8	5.31		1500	1.4	1070	2900	17400	$7.23	1a,2a,4f,9a,10c	Spotlight
		60	62704	60PARH1500FL25TP	120	6	CC-8	5.31		1500	1.4	1070	2900	4050	$7.23	1a,2a,4f,9a,10c	Floodlight
		60	66279	60PARH1500S10/P2	120	3	CC-8	5.31		1500	1.4	1070	2900	17400	$7.23	1a,2a,4f,9a,10c	Spotlight, Twin Pack
		60	66280	60PARH1500F25/P2	120	3	CC-8	5.31		1500	1.4	1070	2900	4050	$7.23	1a,2a,4f,9a,10c	Floodlight, Twin Pack
		90	62705	90PARH1500SP10TP	120	6	CC-8	5.31		1500	1.4	1790	2900	26450	$10.84	1a,2a,4f,9a,10c	Spotlight
		90	62706	90PARH1500FL25TP	120	6	CC-8	5.31		1500	1.4	1790	2900	6850	$10.84	1a,2a,4f,9a,10c	Floodlight
		90	66281	90PARH1500S10/P2	120	3	CC-8	5.31		1500	1.4	1790	2900	26450	$10.84	1a,2a,4f,9a,10c	Spotlight, Twin Pack
		90	66282	90PARH1500F25/P2	120	3	CC-8	5.31		1500	1.4	1790	2900	6850	$10.84	1a,2a,4f,9a,10c	Floodlight, Twin Pack
Cool Beam PAR38 Quartzline®																	
PAR38	Med Skirt	250	23719	Q250PAR/SP10	120	12	CC-8	5.31		4200		3600	2880	40000		1a,2a,2j,4b,4f,4g,4h, 9a,10c	Spotlight
		250	23718	Q250PAR/FL30	120	12	CC-8	5.31		4200		3600	2880	9000		1a,2a,2j,4b,4f,4g,4h, 9a,10c	Floodlight

* Based on 3 hours per day use.
** Based on 3 hours per day use, $0.11 per Kwh

For the most up-to-date product information, see www.gelighting.com. To convert inches to millimeters, multiply by 25.4.
All warning and caution notices found at the end of this section (page 2-17).

Halogen Lamps

Bulb Shape	Base Type	Watts	Order Code	Description	Volts	Case Qty	Filament Type	MOL (in)	LCL (in)	Rated Life (hrs)	Rated Life (yrs*)	Initial Lumens	Initial Color Temp	CBCP	Annual Operating Costs**	Warning and Caution Notices	Additional Information
Halogen Compact PAR Lamps																	
Compact HIR™ PAR30																	
PAR30	Med	48	66580	48PAR30HIR+/NFL	120	6	CC-8	3.62		4200	3.8	840	2775	2600	$5.78	1a,2a,4f,4h,9a,10c	Narrow Floodlight, 25°
		48	76126	48PAR30/HIR+/FL30	120	6	CC-8	3.62		4200	3.8	840	2775	2600	$5.78	1a,2a,4f,4h,9a,10c	Floodlight
		48	76127	48PAR30/HIR+/SP10	120	6	CC-8	3.62		4200	3.8	840	2775	10200	$5.78	1a,2a,4f,4h,9a,10c	Spotlight
Compact HIR™ PAR30 Long Neck																	
PAR30L	Med	48	73546	48PAR30/L/HIR+/FL	120	6	CC-8	4.75		4200	3.8	850	2750	2500	$5.78	1a,2a,4f,4h,9a,10c	Floodlight
		48	74779	48PAR30/L/HIR+/SP	120	6	CC-8	4.75		4200	3.8	850	2750	9500	$5.78	1a,2a,4f,4h,9a,10c	Spotlight
Compact PAR30 Long Neck																	
PAR30L	Med	38	69168	38PAR30L/H/FL25	120	6	CC-8	4.75		1500	1.4	550	1500	2850	$4.58	1a,2a,4f,4h,9a,10c	Floodlight
		38	69169	38PAR30L/H/SP10	120	6	CC-8	4.75		1500	1.4	550	3800	2850	$4.58	1a,2a,4f,4h,9a,10c	Spotlight
Compact PAR30																	
PAR30	Med	38	69166	38PAR30H/FL25	120	6	CC-8	3.62		1500	1.4	580	1750	2850	$4.58	1a,2a,4f,4h,9a,10c	Floodlight
		38	69167	38PAR30H/SP10	120	6	CC-8	3.62		1500	1.4	580	5700	2850	$4.58	1a,2a,4f,4h,9a,10c	Spotlight
Compact PAR20																	
PAR20	Med	35	85476	35PAR20H/F25-PQ1/6	120	6	CC-8	3.13		1500	1.4	260	2700	520	$4.22	1a,2a,4f,4h,9a,10c	Floodlight
		35	71740	35PAR20H/YR-TP12	120	12	CC-8	3.13		1500	1.4	260	2700	520	$4.22	1a,2a,4f,4h,9a,10c	Floodlight
		38	69163	38PAR20H/FL25	120	6	CC-8	3.13		1500	1.4	490	1450	2850	$4.58	1a,2a,4f,4h,9a,10c	Floodlight
		38	69164	38PAR20H/SP10	120	6	CC-8	3.13		1500	1.4	490	3800	2850	$4.58	1a,2a,4f,4h,9a,10c	Spotlight
		38	69165	38PAR20H/FL25/P2	120	3	CC-8	3.13		3000	1.4	490	1450	2850	$4.58	1a,2a,4f,4h,9a,10c	Floodlight, Twin Pack
		38	69148	38PAR20HIR+/FL30	120	6	CC-8	3.13		3000	1.4	530	1300	2750	$4.58	1a,2a,4f,4h,9a,10c	HIR+, Floodlight
		38	69149	38PAR20HIR+/SP15	120	6	CC-8	3.13		3000	1.4	530	2600	2750	$4.58	1a,2a,4f,4h,9a,10c	HIR+, Spotlight
Halogen Compact PAR16																	
JDR16	Med	35	20641	35PAR16CURIO	120	3	CC-6V	2.05		3000	2.7		2700	500		1a,2a,2b,2e,4f,4i,4h,7a, 9a,10b,10c	Curio cabinet
PAR16		60	41623	60PAR16/H/FL30	120	6	CC-8	2.88		2000	1.8	650	2950	1550		1a,2a,4f,4h,9a,10c	Floodlight
		60	82142	60PAR16FL/RVL-CD	120	6	CC-8	2.88		2000	1.8	485	2850			1a,2a,4f,4h,9a,10c	Reveal®, Floodlight, Carded
		75	41629	75PAR16/H/FL30	120	6	CC-8	2.88		2000	1.8	900	2950	1600		1a,2a,4f,4h,9a,10c	Floodlight
Compact PAR36																	
PAR36	Scrw Term	35	19873	35PAR36/H/SP5	12	12	C-6	2.75		4000		250	3050	25000		2a,2b,4f,4g,7a,9b,10c	Spotlight
			19876	35PAR36/H/SP8	12	12	C-6	2.75		4000		250	3050	8000		2a,2b,4f,4g,7a,9b,10c	Spotlight
			19877	35PAR36/H/FL30	12	12	C-6	2.75		4000		250	3050	900		2a,2b,4f,4g,7a,9b,10c	Floodlight
			42072	35PAR36/H/VWFL	12	12	C-6	2.75		4000		250	3050			2a,2b,4f,4g,7a,9b,10c	Wide Flood
		50	19878	50PAR36/H/SP5	12	12	C-6	2.75		4000		400	3050	39000		2a,2b,4f,4g,7a,9b,10c	Spotlight
			19879	50PAR36/H/SP8	12	12	C-6	2.75		4000		400	3050	10000		2a,2b,4f,4g,7a,9b,10c	Spotlight
			19880	50PAR36/H/FL30	12	12	C-6	2.75		4000		400	3050	1300		2a,2b,4f,4g,7a,9b,10c	Floodlight
Halogen Reflector																	
HIR™																	
R20	Med	45	74204	45R20/H/HIR-TP6	120	6	CC-8	3.54		3000	2.7	490	2750		$5.42	—	Halogen Reflector
BR30	Med	45	74206	45BR30/H/HIR-TP6	120	6	CC-8	5.37		3000	2.7	640	2750		$5.42	1a,1b, 2a, 2b, 2e, 4i, 7a	Halogen Reflector
BR40	Med	45	74207	45BR40/H/HIR-TP6	120	6	CC-8	6.56		3000	2.7	740	2750		$5.42	1a,1b, 2a, 2b, 2e, 4i, 7a	Halogen Reflector
BR30	Med	65	75414	65BR30/H/RVL-TP	120	6	CC-8	5.37		3000	2.7	485	2750		$7.83	1a,1b, 2a, 2b, 2e, 4i, 7a	Halogen Reflector
BR40	Med	65	77757	65BR40/H/HIR-TP6	120	6	CC-8	6.56		3000	2.7	1100	2800		$7.83	1a,1b, 2a, 2b, 2e, 4i, 7a	Halogen Reflector
A-Line/Decorative																	
A-19																	
A19	Med	29	78795	29A/CL/H-2PK	120	6	CC-8	4.43		1000	0.9	430	2850		$3.49	1a,2a,2b,2c,2e,4i, 4j,9a,10b,10c	Clear, Halogen, 2-Pack
		29	62607	29A/CL/RVL/H-2PK	120	6	CC-8	4.43		1000	0.9	325	2850		$3.49	1a,2a,2b,2c,2e,4i, 4j,9a,10b,10c	Clear Reveal®, Halogen, 2-Pack
		29	63002	29A/W/H-2PK	120	6	CC-8	4.43		1000	0.9	430	2850		$3.49	1a,2a,2b,2c,2e,4i, 4j,9a,10b,10c	Soft White, Halogen, 2-Pack
		29	66246	29A/W/H-4/12PK	120	12	CC-8	4.43		1000	0.9	430	2850		$3.49	1a,2a,2b,2c,2e,4i, 4j,9a,10b,10c	Soft White, Halogen, 4-Pack
		29	63006	29A/W/RVL/H-2PK	120	6	CC-8	4.43		1000	0.9	325	2850		$3.49	1a,2a,2b,2c,2e,4i, 4j,9a,10b,10c	Reveal®, Halogen, 2-Pack
		29	60285	29A/W/2X/H/4PK	120	12	CC-8	4.43		2000	1.8	390	2800		$3.49	1a,2a,2b,2c,2e,4i, 4j,9a,10b,10c	Modified Spectrum Soft White, Halogen, 4-Pack
		43	78796	43A/CL/H-2PK	120	6	CC-8	4.43		1000	0.9	750	2900		$5.18	1a,2a,2b,2c,2e,4i, 4j,9a,10b,10c	Clear, Halogen, 2-Pack
		43	62616	43A/CL/RVL/H-2PK	120	6	CC-8	4.43		1000	0.9	565	2900		$5.18	1a,2a,2b,2c,2e,4i, 4j,9a,10b,10c	Clear Reveal®, Halogen, 2-Pack
		43	63003	43A/W/H-2PK	120	6	CC-8	4.43		1000	0.9	620	2900		$5.18	1a,2a,2b,2c,2e,4i, 4j,9a,10b,10c	Soft White, Halogen, 2-Pack

* Based on 3 hours per day use.
** Based on 3 hours per day use, $0.11 per Kwh

For the most up-to-date product information, see www.gelighting.com. To convert inches to millimeters, multiply by 25.4.
All warning and caution notices found at the end of this section (page 2-17).

Bulb Shape	Base Type	Watts	Order Code	Description	Volts	Case Qty	Filament Type	MOL (in)	LCL (in)	Rated Life (hrs)	Rated Life (yrs*)	Initial Lumens	Initial Color Temp	CBCP	Annual Operating Costs**	Warning and Caution Notices	Additional Information
A-Line/Decorative (continued)																	
A-19 (continued)																	
A19	Med	43	66247	43A/W/H-4/12PK	120	12	CC-8	4.43		1000	0.9	620	2900		$5.18	1a,2a,2b,2c,2e,4i, 4j,9a,10b,10c	Soft White, Halogen, 4-Pack
		43	63007	43A/W/RVL/H-2PK	120	6	CC-8	4.43		1000	0.9	565	2900		$5.18	1a,2a,2b,2c,2e,4i, 4j,9a,10b,10c	Reveal®, Halogen, 2-Pack
		43	60071	43A/W/2X/H/4PK	120	12	CC-8	4.43		2000	1.8	620	2750		$5.18	1a,2a,2b,2c,2e,4i, 4j,9a,10b,10c	Modified Spectrum Soft White, Halogen, 4-Pack
		53	78797	53A/CL/H-2PK	120	6	CC-8	4.43		1000	0.9	1050	2950		$6.38	1a,2a,2b,2c,2e,4i, 4j,9a,10b,10c	Clear, Halogen, 2-Pack
		53	62617	53A/CL/RVL/H-2PK	120	6	CC-8	4.43		1000	0.9	790	2950		$6.38	1a,2a,2b,2c,2e,4i, 4j,9a,10b,10c	Clear Reveal®, Halogen, 2-Pack
		53	63004	53A/W/H-2PK	120	6	CC-8	4.43		1000	0.9	1050	2950		$6.38	1a,2a,2b,2c,2e,4i, 4j,9a,10b,10c	Soft White, Halogen, 2-Pack
		53	66248	53A/W/H-4/12PK	120	12	CC-8	4.43		1000	0.9	890	2950		$6.38	1a,2a,2b,2c,2e,4i, 4j,9a,10b,10c	Soft White, Halogen, 4-Pack
		53	63008	53A/W/RVL/H-2PK	120	6	CC-8	4.43		1000	0.9	790	3000		$6.38	1a,2a,2b,2c,2e,4i, 4j,9a,10b,10c	Reveal®, Halogen, 2-Pack
		53	60070	53A/W/2X/H/4PK	120	12	CC-8	4.43		2000	1.8	850	2750		$6.38	1a,2a,2b,2c,2e,4i, 4j,9a,10b,10c	Modified Spectrum Soft White, Halogen, 4-Pack
		72	78798	72A/CL/H-2PK	120	6	CC-8	4.43		1000	0.9	1490	3000		$8.67	1a,2a,2b,2c,2e,4i, 4j,9a,10b,10c	Clear, Halogen, 2-Pack
		72	62618	72A/CL/RVL/H-2PK	120	6	CC-8	4.43		1000	0.9	1120	3000		$8.67	1a,2a,2b,2c,2e,4i, 4j,9a,10b,10c	Clear Reveal, Halogen, 2-Pack
		72	63005	72A/W/H-2PK	120	6	CC-8	4.43		1000	0.9	1270	3000		$8.67	1a,2a,2b,2c,2e,4i, 4j,9a,10b,10c	Soft White, Halogen, 2-Pack
		72	66249	72A/W/H-4/12PK	120	12	CC-8	4.43		1000	0.9	1270	3000		$8.67	1a,2a,2b,2c,2e,4i, 4j,9a,10b,10c	Soft White, Halogen, 4-Pack
		72	63009	72A/W/RVL/H-2PK	120	6	CC-8	4.43		1000	0.9	1120	3000		$8.67	1a,2a,2b,2c,2e,4i, 4j,9a,10b,10c	Reveal®, Halogen, 2-Pack
		72	60035	72A/W/2X/H/4PK	120	12	CC-8	4.43		2000	1.8	1270	2800		$8.67	1a,2a,2b,2c,2e,4i, 4j,9a,10b,10c	Modified Spectrum Soft White, Halogen, 4-Pack
A-21																	
A21	3C Med	30/70/100	24699	30/100-HALOGEN	120	6	CC-8	5.25		2500	2.3	300/1050/ 1370	2900		$12.05	1a,2a,2b,2c,4i,4j, 9a,10b,10c	3-Way
		50/100/150	81590	50/150-HALOGEN	120	6	CC-8	5.25		2500	2.3	700/1600/ 2300	2900		$18.07	1a,2a,2b,2c,4i,4j, 9a,10b,10c	3-Way
		50/100/150	71367	50/150/H/RVL-TP6	120	6	CC-8	5.25		2500	2.3	560/1280/ 1840	2850		$18.07	1a,2a,2b,2c,4i,4j, 9a,10b,10c	Reveal®, 3-Way
	Med	150	71364	150A/W/RL/HAL-TP6	120	6	CC-8	5.25		2000	1.8	2650	2900		$18.07	1a,2a,2b,2c,4i,4j, 9a,10b,10c	Reader
Traditional Decorative																	
B10	Cand	25	16764	25BC/H/CD2	120	5	CC-8	3.94	2.22	2250	2.1	280	2700		$3.01	1a,1b,2a,2b,2e,4i, 4j,9a,10b,10c	Carded Twin Pack, Chandelier
	Med	25	16760	25BM/H/CD2	120	5	CC-8	3.94	2.22	2250	2.1	260	2600		$3.01	1a,1b,2a,2b,2e,4i, 4j,9a, 10b,10c	Carded Twin Pack
	Med	29	60269	29BM/H/CD2	120	3	CC-8	3.94		1000	0.9	430	2850		$3.49	1a,1b,2a,2b,2e,4i, 4j,9a, 10b,10c	Carded Twin Pack
	Cand	40	16765	40BC/H/CD2	120	5	CC-8	3.94	2.22	2250	2.1	485	2700		$4.82	1a,1b,2a,2b,2e,4i, 4j,9a, 10b,10c	Carded Twin Pack, Chandelier
	Med	40	16761	40BM/H/CD2	120	5	CC-8	3.94	2.22	2250	2.1	485	2700		$4.82	1a,1b,2a,2b,2e,4i, 4j,9a, 10b,10c	Carded Twin Pack
	Med	43	60271	43BM/H/CD2	120	3	CC-8	3.94		1000	0.9	750	2900		$5.18	1a,1b,2a,2b,2e,4i, 4j,9a, 10b,10c	Carded Twin Pack
CA9	Med	29	60273	29CAM/H/CD2	120	3	CC-8	4.56		1000	0.9	430	2850		$3.49	1a,1b,2a,2b,2e,4i, 4j,9a, 10b,10c	Carded Twin Pack
CA9	Med	43	60276	43CAM/H/CD2	120	3	CC-8	4.56		1000	0.9	750	2900		$5.18	1a,1b,2a,2b,2e,4i, 4j,9a, 10b,10c	Carded Twin Pack
Flame																	
F15	Med	25	16766	25BFM/H/CD2	120	5	CC-8	3.94	2.22	2250	2.1	280	2600		$3.01	1a,1b,2a,2b,2e,4i, 4j,9a, 10b,10c	Carded Twin Pack
		40	16767	40BFM/H/CD2	120	5	CC-8	3.94	2.22	2250	2.1	350	2500		$4.82	1a,1b,2a,2b,2e,4i, 4j,9a, 10b,10c	Carded Twin Pack

* Based on 3 hours per day use.
** Based on 3 hours per day use, $0.11 per Kwh

For the most up-to-date product information, see www.gelighting.com. To convert inches to millimeters, multiply by 25.4.
All warning and caution notices found at the end of this section (page 2-17).

Halogen Lamps

Bulb Shape	Base Type	Watts	Order Code	Description	Volts	Case Qty	Filament Type	MOL (in)	LCL (in)	Rated Life (hrs)	Rated Life (yrs*)	Initial Lumens	Initial Color Temp	CBCP	Annual Operating Costs**	Warning and Caution Notices	Additional Information
A-Line/Decorative (continued)																	
Globe																	
G16.5	Cand	40	82131	40GC/CL/H-PQ2/3	120	6	CC-8	3		2250	2.1	415	2500		$4.82	1a,1b,2a,2b,2e,4i,4j, 7a,10b,10c	Clear, Halogen Globe
		60	82132	60GC/CL/H-PQ2/3	120	6	CC-8	3		2250	2.1	600	2500		$7.23	1a,1b,2a,2b,2e,4i,4j, 7a,10b,10c	Clear, Halogen Globe
G16.5	Med	40	82133	40GM/CL/H-PQ2/3	120	6	CC-8	3		2250	2.1	415	2700		$4.82	1a,1b,2a,2b,2e,4i,4j, 7a,10b,10c	Clear, Halogen Globe
		60	82134	60GM/CL/H-PQ2/3	120	6	CC-8	3		2250	2.1	650	2850		$7.23	1a,1b,2a,2b,2e,4i,4j, 7a,10b,10c	Clear, Halogen Globe
G25	Med	29	60100	29G25/H/CL	120	3	CC-8	4.45		1000	0.9	430	2850		$3.49	1a,1b,2a,2b,2e,4i,4j,9c, 10b,10c	Halogen, Clear Globe
			60199	29G25/H/W	120	3	CC-8	4.45		1000	0.9	430	2850		$3.49	1a,1b,2a,2b,2e,4i,4j,9c, 10b,10c	Halogen, White Globe
		40	82140	40G25/CL/H/RVL	120	6	CC-8	4.50	2.60	2250	2.1	470	2550		$4.82	1a,1b,2a,2b,2e,4i, 4j,9c, 10b,10c	Halogen, Clear Globe
			16774	40G25/H/CRYSTAL	120	6	CC-8	4.45	2.60	2250	2.1	520	2700		$4.82	1a,1b,2a,2b,2e,4i, 4j,9c, 10b,10c	Crystal Clear Globe
			71373	40G25H/CRY/RV-TP	120	6	CC-8	4.45	2.56	2250	2.1	390	2550		$4.82	1a,1b,2a,2b,2e,4i, 4j,7a,9c,10b,10c	Reveal®, Crystal Globe
		43	60076	43G25/H/CL	120	3	CC-8	4.45		1000	0.9	750	2900		$5.18	1a,1b,2a,2b,2e,4i, 4j,9c, 10b,10c	Halogen, Clear Globe
			60109	43G25/H/W	120	3	CC-8	4.45		1000	0.9	750	2900		$5.18	1a,1b,2a,2b,2e,4i, 4j,9c, 10b,10c	Halogen, White Globe
		60	82141	60G25/CL/H/RVL	120	6	CC-8	4.50	2.60	2250	2.1	675	2850		$7.23	1a,1b,2a,2b,2e,4i, 4j,9c, 10b,10c	Reveal®, Halogen Globe
T-Shape																	
T10	Med	40	16777	40T10/H/CD	120	4	CC-8	5.04	2.56	2250	2.1	520	2700		$4.82	1a,1b,2a,2b,2e,4i, 4j,9c, 10b,10c	Carded
		60	16778	60T10/H/CD	120	4	CC-8	5.04	2.56	2250	2.1	900	2900		$7.23	1a,1b,2a,2b,2e,4i, 4j,9c, 10b,10c	Carded
Landscape Lighting																	
MR16	2-Pin GX5-3	20	71485	Q20MR16/LAND-CD	12	3	C-6	1.88		2000		275	2900	450	$2.41		Outdoor Floodlight
T3	2-Pin G4	20	71495	Q20T3/LAND-CD2	12	25	C-8	1.25	0.75	2000		350	2750		$2.41		Outdoor
	2-Pin GY6.35	50	71496	Q50T3/LAND-CD2	12	25	C-8	1.75	1.13	3000		900	2950		$6.02		Outdoor
AR70																	
AR70	DCBay Ba15d	50	72255	50AR70/SP8	12	10	C-8	2.64		3000			2800	12500		2e,4a,4e,4f,9a,9d, 10b,10c	Spotlight
AR111																	
AR111	G53	35	72253	35AR111/SP4	12	10	C-8	2.64		3000			2800	22000		2a,4a,4e,4f,9a,9d, 10b,10c	Narrow Spotlight
		35	97532	35AR111/SP8	12	10	C-8	2.64		3000			2800	14000		2a,2j,4a,4e,4f,9a, 9d,10b,10c	Spotlight
		35	97533	35AR111/FL24	12	10	C-8	2.64		3000			2800	2500		2a,2j,4a,4e,4f,9a, 9d,10b,10c	Narrow Floodlight
		50	72254	50AR111/SP4	12	10	C-8	2.64		3000			2850	25000		2a,4a,4e,4f,9a,9d, 10b,10c	Narrow Spotlight
		50	97534	50AR111/SP8	12	10	C-8	2.64		3000			2800	17800		2a,2j,4a,4e,4f,9a, 9d,10b,10c	Spotlight
		50	97535	50AR111/FL24	12	10	C-8	2.64		3000			2800	3500		2a,2j,4a,4e,4f,9a, 9d,10b,10c	Narrow Floodlight
		75	97536	75AR111/SP8	12	10	C-8	2.64		3000			2900	23500		2a,2j,4a,4e,4f,9a, 9d,10b,10c	Spotlight
		75	97537	75AR111/FL24	12	10	C-8	2.64		3000			2900	5300		2a,2j,4a,4e,4f,9a, 9d,10b,10c	Narrow Floodlight
		75	97538	75AR111/FL45	12	10	C-8	2.64		3000			2900	1700		2a,2j,4a,4e,4f,9a, 9d,10b,10c	Wide Floodlight
MR																	
Turn & Lock ConstantColor®																	
MR16	TAL GU7	35	81282	35MR16/6/TL-AX	12	10	C-8	1.88		3500		475	3200	8500			
		35	78816	35MR16/Q/8/TL-AX	12	10	C-8	2.00		3500			2900			2a,2b,4f,7a,9a,10b,10c	Narrow Spot
		50	30901	50MR16/Q/10/TL	12	10	C-6	2.00		3500			3000	10800		2a,2b,4f,7a,9a,10b,10c	Narrow Spot
		50	30900	50MR16/Q/20/TL	12	10	C-6	2.00		3500			3000	3330		2a,2b,4f,7a,9a,10b,10c	Narrow Flood
		50	30899	50MR16/Q/40/TL	12	10	C-6	2.00		3500			3000	1395		2a,2b,4f,7a,9a,10b,10c	Floodlight

* Based on 3 hours per day use.
** Based on 3 hours per day use, $0.11 per Kwh

For the most up-to-date product information, see www.gelighting.com. To convert inches to millimeters, multiply by 25.4.
All warning and caution notices found at the end of this section (page 2-17).

MR (continued)

Bulb Shape	Base Type	Watts	Order Code	Description	Volts	Case Qty	Filament Type	MOL (in)	LCL (in)	Rated Life (hrs)	Rated Life (yrs*)	Initial Lumens	Initial Color Temp	CBCP	Annual Operating Costs**	Warning and Caution Notices	Additional Information
ConstantColor® Precise™ Cover Glass MR16																	
MR16	2-Pin GU5.3	20	20858	Q20MR16C/CG15ESX	12	20	C-6	1.88		5000	4.6	225	2900	3150		2a,2b,4f,9a,10c	Narrow Spot, ANSI: ESX
		20	20857	Q20MR16C/CG40BAB	12	20	C-6	1.88		5000	4.6	225	2900	475	$2.41	2a,2b,4f,9a,10c	Flood. ANSI: BAB
		20	21456	FAM6Q20MR16NSCCG	12	1	C-6	1.88		5000	4.6		2900	3350	$2.41	2a,2b,4f,9a,10c	Narrow Spot, Carded, ANSI: ESX
		20	21455	FAM6Q20MR16FLCCG	12	1	C-6	1.88		5000	4.6		2900	490	$2.41	2a,2b,4f,9a,10c	Flood, Carded, ANSI: BAB
		35	20864	Q35MR16/C/CG12	12	20	C-6	1.88		5000			3000	7500		2a,2b,4f,9a,10c	Narrow Spot, ANSI: FRB
		35	20860	Q35MR16C/CG20	12	20	C-6	1.88		5000	4.6	520	3000	3200	$4.22	2a,2b,4f,9a,10c	Spot, ANSI: FRA
		35	20859	Q35MR16C/CG40	12	20	C-6	1.88		5000	4.6	520	3000	900	$4.22	2a,2b,4f,9a,10c	Flood. ANSI: FMW
		35	41487	Q35MR16/CCG40	24	20	CC-6	1.88		4000			2950	920		2a,2b,4f,9a,10c	Floodlight
		50	20872	Q50MR16C/CG15	12	20	C-6	1.88		6000			3050	8400		2a,2b,4f,9a,10c	Narrow Spot, ANSI: EXT
		50	20871	Q50MR16C/CG25	12	20	C-6	1.88		6000			3050	2900		2a,2b,4f,9a,10c	Narrow Spot, ANSI: EXZ
		50	20867	Q50MR16C/CG40	12	20	C-6	1.88		6000			3050	1500		2a,2b,4f,9a,10c	Flood, ANSI: EXN
		50	20865	Q50MR16C/CG55	12	20	C-6	1.88		6000	5.5	775	3050	850	$6.02	2a,2b,4f,9a,10c	Wide Flood, ANSI: FNV
		50	41488	Q50MR16/C/CG15	24	20	CC-6	1.88		2000	1.8	575	2950	8400	$6.02	2a,2b,4f,9a,10c	Narrow Spot
		50	41489	Q50MR16/C/CG40	24	20	CC-6	1.88		2000	1.8	615	2950	1570	$6.02	2a,2b,4f,9a,10c	Floodlight
		50	21458	FAM6Q50MR16NSCCG	12	1	C-6	1.88		6000			3050	9500		2a,2b,4f,9a,10c	Narrow Spot. Carded, ANSI: EXT
		50	21457	FAM6Q50MR16FLCCG	12	1	C-6	1.88		6000			3050	1720		2a,2b,4f,9a,10c	Flood. 3050K. Carded, ANSI: EXN
		71	20876	Q71MR16C/CG15	12	20	C-6	1.88		4000			3050	10800		2a,2b,4f,9a,10c	Narrow Spot, ANSI: EYF
		71	20874	Q71MR16/C/CG25	12	20	C-6	1.88		4000			3050	4550		2a,2b,4f,9a,10c	Narrow Spot, ANSI: EYJ
		71	20873	Q71MR16/C/CG40	12	20	C-6	1.88		4000			3050	2000		2a,2b,4f,9a,10c	Flood, ANSI: EYC
ConstantColor® Precise™ MR16																	
MR16	2-Pin GX5.3	20	20816	Q20MR16/C/VNSP7	12	20	CC-6	1.88		3000			2900	7400		2a,2j,4a,4c,4e,4f,9a, 9d, 10b,10c	Very Narrow Spot, ANSI: EZX
		20	20815	Q20MR16/C/NSP15	12	20	C-6	1.88		5000			2900	3750		2a,2j,4a,4c,4e,4f,9a, 9d, 10b,10c	Narrow Spot, ANSI:ESX
		20	20814	Q20MR16C/FL40	12	20	C-6	1.88		5000	4.6	240	2900	525	$2.41	2a,2j,4a,4c,4e,4f,9a, 9d, 10b,10c	Flood. ANSI: BAB
		35	20826	Q35MR16/C/SP20	12	20	C-6	1.88		5000	4.6	520	3000	3900	$4.22	2a,2j,4a,4c,4e,4f,9a, 9d, 10b,10c	Spot, ANSI: FRA
		35	20825	Q35MR16/C/FL40	12	20	C-6	1.88		5000	4.6	520	3000	1000	$4.22	2a,2j,4a,4c,4e,4f,9a, 9d, 10b,10c	Flood. ANSI: FMW
		42	20830	Q42MR16/C/VNSP9	12	20	CC-6	1.88		3500			3000	12300		2a,2j,4a,4c,4e,4f,9a, 9d, 10b,10c	Very Narrow Spot, ANSI: EZY
		50	20839	Q50MR16/C/NSP15	12	20	C-6	1.88		6000	5.5	750	3050	9100	$6.02	2a,2j,4a,4c,4e,4f,9a, 9d, 10b,10c	Narrow Spot, ANSI: EXT
		50	20835	Q50MR16/C/NFL25	12	20	C-6	1.88		6000	5.5	800	3050	3200	$6.02	2a,2j,4a,4c,4e,4f,9a, 9d, 10b,10c	Narrow Flood, ANSI: EXZ
		50	20834	Q50MR16C/NFL30	12	20	C-6	1.88		6000	5.5	850	3050	2500	$6.02	2a,2j,4a,4c,4e,4f,9a, 9d, 10b,10c	Narrow Flood, ANSI: EXK
		50	20833	Q50MR16/C/FL40	12	20	C-6	1.88		6000	5.5	800	3050	1700	$6.02	2a,2j,4a,4c,4e,4f,9a, 9d, 10b,10c	Flood. ANSI: EXN
		50	20832	Q50MR16/C/WFL55	12	20	C-6	1.88		6000	5.5	825	3050	900	$6.02	2a,2j,4a,4c,4e,4f,9a, 9d, 10b,10c	Wide Flood, ANSI: FNV
		71	20843	Q71MR16/C/NSP15	12	20	C-6	1.88		4000	3.7	1125	3050	11500	$8.55	2a,2j,4a,4c,4e,4f,9a, 9d, 10b,10c	Narrow Spot, ANSI: EYF
		71	20841	Q71MR16/C/NFL25	12	20	C-6	1.88		4000	3.7	1175	3050	5500	$8.55	2a,2j,4a,4c,4e,4f,9a, 9d, 10b,10c	Narrow Flood, ANSI: EYJ
		71	20840	Q71MR16/C/FL40	12	20	C-6	1.88		4000	3.7	1200	3050	2200	$8.55	2a,2j,4a,4c,4e,4f,9a, 9d, 10b,10c	Flood. ANSI: EYC
Precise™ Cover Glass IR MR16																	
MR16	2-Pin GU5.3	20	77900	Q20MR16HIR/CCG10	12	20	C-8	1.77		5000			2900	6000		2a,2b,4f,9a,10c	Narrow Spot
		20	77901	Q20MR16HIR/CCG24	12	20	C-8	1.77		5000			2900	2300		2a,2b,4f,9a,10c	Narrow Flood
		20	77902	Q20MR16HIR/CCG35	12	20	C-8	1.77		5000			2900	1000		2a,2b,4f,9a,10c	Flood
		35	77904	Q35MR16HIR/CCG10	12	20	C-8	1.77		5000			2950	12000		2a,2b,4f,9a,10c	Narrow Spot
		35	77905	Q35MR16HIR/CCG24	12	20	C-8	1.77		5000			2950	4200		2a,2b,4f,9a,10c	Narrow Flood
		35	77906	Q35MR16HIR/CCG35	12	20	C-8	1.77		5000			2950	2000		2a,2b,4f,9a,10c	Flood
		35	79233	Q35MR16HIR/CCG55	12	20	C-8	1.77		5000			2950	1000		2a,2b,4f,9a,10c	Wide Flood
		45	77907	Q45MR16HIR/CCG10	12	20	C-8	1.77		5000			3000	14000		2a,2b,4f,9a,10c	Narrow Spot
		45	77908	Q45MR16HIR/CCG24	12	20	C-8	1.77		5000			3000	5200		2a,2b,4f,9a,10c	Narrow Flood
MR16	2-Pin GX5.3	45	77909	Q45MR16HIR/CCG35	12	20	C-8	1.77		5000			3000	2300		2a,2b,4f,9a,10c	Flood

* Based on 3 hours per day use.
** Based on 3 hours per day use, $0.11 per Kwh

For the most up-to-date product information, see www.gelighting.com. To convert inches to millimeters, multiply by 25.4.
All warning and caution notices found at the end of this section (page 2-17).

Bulb Shape	Base Type	Watts	Order Code	Description	Volts	Case Qty	Filament Type	MOL (in)	LCL (in)	Rated Life (hrs)	Rated Life (yrs*)	Initial Lumens	Initial Color Temp	CBCP	Annual Operating Costs**	Warning and Caution Notices	Additional Information
MR (continued)																	
Standard MR16																	
MR16	2-Pin GX5.3	20	25481	Q20MR16/SP	12	20	C-6	1.88		2000	1.8	275	2900	3500	$2.41	2a,2j,4a,4c,4e,4f,9a, 9d, 10b,10c	Spot, ANSI: ESX
		20	25480	Q20MR16/FL	12	20	C-6	1.88		2000	1.8	275	2900	500	$2.41	2a,2j,4a,4c,4e,4f,9a, 9d, 10b,10c	Flood, ANSI: BAB
		20	85290	Q20MR16/SP-PQ3/6	12	6	C-6	1.88		2000	1.8	290	2900	3500	$2.41	2a,2j,4a,4c,4e,4f,9a, 9d, 10b,10c	Spotlight, ANSI: ESX
		20	85289	Q20MR16/FL-PQ3/6	12	6	C-6	1.88		2000	1.8	290	2900	500	$2.41	2a,2j,4a,4c,4e,4f,9a, 9d, 10b,10c	Floodlight ANSI: BAB
		50	25483	Q50MR16/SP	12	20	C-6	1.88		2000	1.8	890	2900	9500	$6.02	2a,2j,4a,4c,4e,4f,9a, 9d, 10b,10c	Spot, ANSI: EXT
		50	25482	Q50MR16/FL	12	20	C-6	1.88		2000	1.8	890	2900	1500	$6.02	2a,2j,4a,4c,4e,4f,9a, 9d, 10b,10c	Flood, ANSI: EXN
		50	85296	Q50MR16/FL-PQ3/6	12	6	C-6	1.88		2000	1.8	890	2900	9500	$6.02	2a,2j,4a,4c,4e,4f,9a, 9d, 10b,10c	Flood, ANSI: EXN
		50	85297	Q50MR16/SP-PQ3/6	12	6	C-6	1.88		2000	1.8	890	2900	1500	$6.02	2a,2j,4a,4c,4e,4f,9a, 9d, 10b,10c	Spot, ANSI: EXT
Standard MR16 Cover Glass																	
MR16	2-Pin GX5.3	20	81763	Q20MR16CGFLCD-BA	12	6	C-6	1.88		2000	1.8	275	2900	450	$2.41	2a,2j,4a,4c,4e,4f,9a, 9d, 10b,10c	Flood, Basic
		20	81765	Q20MR16CGSPCD-BA	12	6	C-6	1.88		2000	1.8	275	2900	3150	$2.41	2a,2j,4a,4c,4e,4f,9a, 9d, 10b,10c	Spot, Basic
		35	81768	Q35MR16CGFLCD-BA	12	6	C-6	1.88		2000	1.8	540	2900	840	$4.22	2a,2j,4a,4c,4e,4f,9a, 9d, 10b,10c	Flood, Basic
		50	81770	Q50MR16CGFLCD-BA	12	6	C-6	1.88		2000	1.8	850	2900	1350	$6.02	2a,2j,4a,4c,4e,4f,9a, 9d, 10b,10c	Flood, Basic
		50	81771	Q50MR16CGSPCD-BA	12	6	C-6	1.88		2000	1.8	850	2900	8550	$6.02	2a,2j,4a,4c,4e,4f,9a, 9d, 10b,10c	Spot, Basic
MR16	2-Pin GX5.3	50	82110	Q50MR16FCCGRV-CD	12	6	C-6	1.88		3000	2.7	650	2950	1750	$6.02	2a,2j,4a,4c,4e,4f,9a, 9d, 10b,10c	Reveal®, Floodlight, Carded
		50	82111	Q50MR16SCCGRV-CD	12	6	C-6	1.88		3000	2.7	650	2950	9000	$6.02	2a,2j,4a,4c,4e,4f,9a, 9d, 10b,10c	Reveal®, Spotlight, Carded
Standard MR11																	
MR11	2-Pin G4	20	30773	Q20MR11/NFL30	12	10	C-6	1.38		3500			2900	600		2a,2b,4c,4e,4f,9a, 9d, 10b,10c,11a	Narrow Flood, ANSI: FTD
		20	25197	FAM6Q20MR11NF/CD	12	1	C-6	1.38		3500			2900	600		2a,2b,4c,4e,4f,9a,9d, 10b,10c,11a	Narrow Flood, ANSI: FTD
		35	30774	Q35MR11SP20(FTF)	12	10	C-6	1.38		3500			2900	3000		2a,2b,4c,4e,4f,9a, 9d, 10b,10c,11a	Spot, ANSI: FTF
		35	30890	Q35MR11NFL30(FTH	12	10	C-6	1.38		3500			2900	1300		2a,2b,4c,4e,4f,9a, 9d, 10b,10c,11a	Narrow Flood, ANSI: FTH
		35	41483	Q35MR11/CG12 24	24	50	C-6	1.38		2000			2950	4100		2a,2b,4c,4f,9a,10c	Spot
120V GU10																	
MR16	GU10	20	16753	Q20GU10/FL/CD	120	5	CC-2V	2.13		2000	1.8	80	2600	230	$2.41	1a,2a,2b,2e,4f,4i, 9a,10b,10c	Flood Carded
		35	16752	Q35GU10/FL/CD	120	5	CC-2V	2.13		3000	2.7	200	2650	500	$4.22	1a,2a,2b,2e,4f,4i, 9a,10b,10c	Flood Carded
		50	16751	Q50GU10/FL/CD	120	5	CC-2V	2.13		3000	2.7	400	2750	1000	$6.02	1a,2a,2b,2e,4f,4i, 9a,10b,10c	Flood Carded
		50	82143	Q50GU10FL/RVL-CD	120	6	CC-2V	2.13		3000	2.7	400	2750	400	$6.02	1a,2a,2b,2e,4f,4i, 9a,10b,10c	Reveal®, Floodlight, Carded
Quartz Halogen																	
Low Voltage																	
T3	2-Pin G4	5	42959	Q5T3/CL	12	100	C-6	1.25 cm	0.75	2000	1.8	60			$0.60	2a,2j,4c,4e,4f,9a, 9d,10b,10c	Clear
		10	34674	Q10T3/CL	12	100	C-6	1.25 cm	0.75	2000	1.8	140			$1.20		Clear
		10	97668	Q10T3/CL/SCD-5PK	12	100	C-6	1.25 cm	0.75	2000	1.8	140			$1.20	2a,2j,4c,4e,4f,9a, 9d,10b,10c	Display lights, Small Card
		20	34715	Q20T2.5/12V/CL	12	100	C-6	1.25 cm	0.75	2000	1.8	350			$2.41		Clear, 12V
		20	97669	Q20T3/CL/SCD-5PK	12	25	C-6	1.25 cm	0.75	2000	1.8	350			$2.41	2a,2j,4c,4e,4f,9a, 9d,10b,10c	Display lights, Small Card

* Based on 3 hours per day use.
** Based on 3 hours per day use, $0.11 per Kwh

For the most up-to-date product information, see www.gelighting.com. To convert inches to millimeters, multiply by 25.4.
All warning and caution notices found at the end of this section (page 2-17).

Bulb Shape	Base Type	Watts	Order Code	Description	Volts	Case Qty	Filament Type	MOL (in)	LCL (in)	Rated Life (hrs)	Rated Life (yrs*)	Initial Lumens	Initial Color Temp	CBCP	Annual Operating Costs**	Warning and Caution Notices	Additional Information
Quartz Halogen (continued)																	
Low Voltage (continued)																	
T3	2-Pin GY6.35	35	34708	Q35T3/12V/CL	12	100	C-6	1.75 cm		2000	1.8	550			$4.22	2a,2j,4c,4e,4f,9a, 9d,10b,10c	Clear, 12V
		35	48503	Q35T3/CL/CD 5PK	12	25	C-6	1.75 cm		2000	1.8	550			$4.22	2a,2j,4c,4e,4f,9a, 9d,10b,10c	Clear Carded
		50	34702	Q50T3/12V/CL	12	100	C-6	1.75 cm		2000	1.8	850			$6.02	2a,2j,4c,4e,4f,9a, 9d,10b,10c	Clear, 12V
T4	2-Pin GY6.35	50	97670	Q50T3/CL/SCD-5PK	12	25	C-6	1.75 cm	1.13	2000	1.8	950			$6.02	2a,2j,4c,4e,4f,9a, 9d,10b,10c	Display lights
		75	19377	Q75T4/CL/CD 5PK	12	25	C-6	1.75 cm	1.13	2000	1.8	1400			$9.03	2a,2j,4c,4e,4f,9a, 9d,10b,10c	Clear, Carded
T3	2-Pin GY6.35	100	34676	Q100T3/12V/CL	12	100	CC-6	1.75 cm		2000	1.8	2350			$12.05	2a,2j,4c,4e,4f,9a, 9d,10b,10c	Clear, 12V
		100	34663	Q100T3/24V/CL	24	100	CC-6	1.75		2000	1.8	2000			$12.05	2a,2j,4c,4e,4f,9a, 9d,10b,10c	Clear, 24V
High Voltage																	
T4	2-Pin G8	25	97664	Q25G8/SCD2	120	5	CC-2V	1.59	1.04	1500	1.4	240	2600		$3.01	1a,2a,2b,2e,4f,4i, 9a,10b,10c	Small Card, Twin Pack
		35	48428	Q35G8/CD2	120	5	CC-2V	1.77	1.34	1500	1.4	350	2600		$4.22	1a,2a,2b,2e,4f,4i,9a, 10b,10c	Carded
		50	21941	Q50G8/CD	120	5	CC-2V	1.77	1.33	1300	1.2	700	2750		$6.02	1a,2a,2b,2e,4f,4i, 9a,10b,10c	Carded
		50	97665	Q50G8/SCD	120	5	CC-2V	1.77	1.33	1300	1.2	700	2750		$6.02	1a,2a,2b,2e,4f,4i, 9a,10b,10c	Small Card
		50	72868	Q50G8/SCD2-PK5	120	5	CC-2V	1.77	1.33	1300	1.2	700	2750		$6.02	1a,2a,2b,2e,4f,4i, 9a,10b,10c	Small Card, Twin Pack
		75	97666	Q75G8/SCD	120	5	CC-2V	1.77	1.34	1500	1.4	900	2850		$9.03	1a,2a,2b,2e,4f,4i,7a, 9a, 10b,10c	Small Card
		75	47801	Q75G8/CD	120	5	CC-2V	1.77	1.34	1500	1.4	900	2850		$9.03	1a,2a,2b,2e,4f,4i,7a, 9a,10b,10c	Carded
		100	97667	Q100G8/SCD	120	5	CC-2V	1.77	1.34	1500	1.4	1300	2900		$12.05	1a,2a,2b,2e,4f,4i,7a, 9a, 10b,10c	Small Card
Quartzline®																	
HIR™ Recessed Single Contact (R7s)																	
T2.5	R7s	350	13894	Q350T3/CL/HIR	120	6	C-8	4.69	2.25	2000		10000	3075			1a,2a,2j,2k,4a,4c,4d, 4e,4f,4g,8a,9a,9d, 10b,10c,12b	IR, Clear, Horizontal
Halogen G9																	
T4	G9	25	16754	Q25G9/CD	120	5	CC-8	1.77	1.26	3000		240	6250			1a,2a,2b,2e,4f,4i,9a, 10b,10c	Carded
		25	81300	Q25G9/F/CD	120	5	CC-8	1.77	1.26	3000						1a,2a,2b,2e,4f,4i, 9a,10b,10c	Frosted, Carded
		40	16755	Q40G9/CD	120	5	CC-8	1.77	1.26	3000		480	2750			1a,2a,2b,2e,4f,4i,9a, 10b,10c	Carded
		40	81301	Q40G9/F/CD	120	5	CC-8	1.77	1.26	3000						1a,2a,2b,2e,4f,4i,9a, 10b,10c	Frosted, Carded
		60	16756	Q60G9/CD	120	5	CC-8	1.77	1.26	3000		780	2800			1a,2a,2b,2e,4f,4i,9a, 10b,10c	Carded
		60	81468	Q60G9/F/CD	120	5	CC-8	1.77	1.26	3000						1a,2a,2b,2e,4f,4i,9a, 10b,10c	Frosted, Carded
		75	16759	Q75G9/CD	120	5	CC-8	1.77	1.26	3000		1100	2850			1a,2a,2b,2e,4f,4i,9a, 10b,10c	Carded
		75	81469	Q75G9/F/CD	120	5	CC-8	1.77	1.26	3000						1a,2a,2b,2e,4f,4i,9a, 10b,10c	Frosted, Carded
Halogen Double Contact Bayonet (BA15d)																	
T4	D C Bay BA15d	100	16451	Q100DC	120	6	CC-8	2.44	1.38	2000		1550	2950			1a,2a,2j,4a,4c,4e,4f, 4g,8a,9a,9d,10b,10c	Frosted
		100	15508	Q100CL/DC	120	6	CC-8	2.44	1.38	2000		1600	2950			1a,2a,2j,4a,4c,4e,4f, 4g,8a,9a,9d,10b,10c	Clear
		100	44386	Q100CL/DC/2V	120	6	CC-2V	2.44	1.38	750 h		1800	2950			1a,2a,2j,4a,4c,4e,4f, 4g,8a,9a,9d,10b,10c	Clear
		150	44653	Q150DC	120	6	CC-8	2.50	1.38	2000		2700	2950			1a,2a,2j,4a,4c,4e,4f, 4g,8a,9a,9d,10b,10c	Frosted
		150	43693	Q150CL/DC	120	6	CC-8	2.50	1.38	2000		2800	2950			1a,2a,2j,4a,4c,4e,4f, 4g,8a,9a,9d,10b,10c	Clear
		150	44384	Q150CL/DC/2V	120	6	CC-2V	2.44	1.38	1000		2800	2950			1a,2a,2j,4a,4c,4e,4f, 4g,8a,9a,9d,10b,10c	Clear
		250	43701	Q250DC	120	6	CC-8	3.00	1.63	2000		4850	2950			1a,2a,2j,4a,4c,4e,4f, 4g,8a,9a,9d,10b,10c	Frosted
		250	43702	Q250DC	130/120	6	CC-8	3.00	1.63	2000		4850	2950			1a,2a,2j,4a,4c,4e,4f, 4g,8a,9a,9d,10b,10c	Frosted

* Based on 3 hours per day use.
** Based on 3 hours per day use, $0.11 per Kwh

For the most up-to-date product information, see www.gelighting.com. To convert inches to millimeters, multiply by 25.4.
All warning and caution notices found at the end of this section (page 2-17).

Halogen Lamps

Bulb Shape	Base Type	Watts	Order Code	Description	Volts	Case Qty	Filament Type	MOL (in)	LCL (in)	Rated Life (hrs)	Rated Life (yrs*)	Initial Lumens	Initial Color Temp	CBCP	Annual Operating Costs**	Warning and Caution Notices	Additional Information
Quartzline® (continued)																	
Halogen Double Contact Bayonet (BA15d) (continued)																	
T4	D C Bay BA15d	250	43697	Q250CL/DC	120	6	CC-8	3.00	1.63	2000		5000	2950			1a,2a,2j,4a,4c,4e,4f, 4g,8a,9a,9d,10b,10c	Clear
		250	43698	Q250CL/DC	130/120	6	CC-8	3.00	1.63	2000		5000	2950			1a,2a,2j,4a,4c,4e,4f, 4g,8a,9a,9d,10b,10c	Clear
		500	43709	Q500DC	120	6	CC-8	3.44	2.13	2000		10100	2950			1a,2a,2j,4a,4c,4e,4f, 4g,8a,9a,9d,10b,10c	Frosted
		500	43710	Q500CL/DC	120	6	CC-8	3.44	2.13	2000		10450	2950			1a,2a,2j,4a,4c,4e,4f, 4g,8a,9a,9d,10b,10c	Clear
Halogen Recessed Single Contact (R7s)																	
T3	R7s	100	73286	Q100T3/SCD-5PK	210	5	C-8	3.13	1.25	1500		1650	2950			1a,2a,2j,4a,4c,4e,4f, 4g,9a,9d,10b,10c,11a	Torchiere, Motion-Sensing and Security, Small Card
		100	22489	Q100T3/CL/CD 5PK	210	60	C-8	3.13	1.25	1500		1650	2950			1a,2a,2j,4a,4c,4e,4f, 4g,9a,9d,10b,10c,11a	Clear, Horizontal, Carded
		150	27449	Q150T3/117/CL/CD	120	60	C-8	4.69	2.25	1500		2400	2950			1a,2a,2j,4a,4c,4d,4e,4f, 4g,9a,9d,10b,10c,11a	Clear, Horizontal, Carded
		150	19378	Q150T3/CL/CD 5PK	120	60	C-8	3.13	1.25	1500		2400	2950			1a,2a,2j,4a,4c,4e,4f,4g, 9a,9d,10b,10c,11a	Clear, Horizontal, Carded
		150	73287	Q150T3/HD/SCD2-5PK	120	5	C-8	3.13	1.25	2000		2400	2950			1a,2a,2j,4a,4c,4e,4f,4g, 9a,9d,10b,10c,11a	Torchiere, Motion-Sensing and Security, Small Card
T2.5	R7s	250	22865	Q250T3/CL-6PK	120	144	C-8	3.13	1.25	1500		4000	2950			1a,2a,2j,4a,4c,4e,4f,4g, 9a,9d,10b,10c,11a	Clear, Horizontal
		250	22121	Q250T3/CL/CD 5PK	120	60	C-8	3.13	1.13	1500		4000	2950			1a,2a,2j,4a,4c,4e,4f,4g, 9a,9d,10b,10c,11a	Clear, Carded
		300	43703	Q300T3/CL-6PK	120	144	C-8	4.69	2.25	2000		5950	2950			1a,2a,2j,4a,4c,4d,4e,4f, 4g,9a,9d,10b,10c,11a	Clear, Horizontal
		300	19379	Q300T3/CL/CD 5PK	120	60	C-8	4.69	2.25	2000		5950	2950			1a,2a,2j,4a,4c,4d,4e,4f, 4g,9a,9d,10b,10c,11a	Clear, Horizontal, Carded
		300	27447	Q300T3CL/CD2-5PK	120	60	C-8	4.69	2.25	2000		5950	2950			1a,2a,2j,4a,4c,4d,4e,4f, 4g,9a,9d,10b,10c,11a	Clear, Horizontal, Carded
		300	97673	Q300T3/HD/SCD2	120	25	C-8	4.69	2.25	2000		5950	2950			1a,2a,2j,4a,4c,4d,4e,4f, 4g,9a,9d,10b,10c,11a	Torchiere, Small Card, Twin Pack
		500	23731	Q500T3/CL	120	12	C-8	4.69	2.25	2000		11100	3000			1a,2a,2j,4a,4c,4d,4e,4f, 4g,9a,9d,10b,10c,11a	Clear, Horizontal
		500	23733	Q500T3/CL	130/120	12	C-8	4.69	2.25	2000		10550	3000			1a,2a,2j,4a,4c,4d,4e,4f, 4g,9a,9d,10b,10c,11a	Clear, Horizontal
		500	23744	Q500T3/CL/6-12PK	120	144	C-8	4.69	2.25	1500		10950	3000			1a,2a,2j,4a,4c,4d,4e,4f, 4g,9a,9d,10b,10c,11a	Clear, 6 Filament Support, Rough Service, Horizontal
		500	19382	Q500T3/CL/CD 5PK	120	60	C-8	4.69	2.25	2000		11100	3000			1a,2a,2j,4a,4c,4d,4e,4f, 4g,9a,9d,10b,10c,11a	Clear, Horizontal, Carded
		500	27448	Q500T3CL/CD2-5PK	120	60	C-8	4.69	2.25	2000		11100	3000			1a,2a,2j,4a,4c,4d,4e,4f, 4g,9a,9d,10b,10c,11a	Clear, Horizontal, Carded
		500	97674	Q500T3/HD/SCD2	120	25	C-8	4.69	2.25	2000		11100	2950			1a,2a,2j,4a,4c,4d,4e,4f, 4g,9a,9d,10b,10c,11a	Special service, Motion-Sensing and Security, Small Card, Twin Pack
T3	R7s	1000	43711	Q1000T3/CL-6PK	230	144	C-8	10.06	6.13	2000		21500	3050			1a,2a,2j,2k,4a,4c,4d, 4e, 4f,4g,8a,9a,9d, 10b,10c,12b	Clear, Horizontal
		1000	43712	Q1000T3/CL-6PK	240	144	C-8	10.06	6.44	2000		21500	3050			1a,2a,2j,2k,4a,4c,4d, 4e, 4f,4g,8a,9a,9d, 10b,10c,12b	Clear, Horizontal
		1500	23828	Q1500T3/CL-12PK	208	144	C-8	10.06 cm	6.25 cm	2000		33000	3050			1a,2a,2j,2k,4a,4c,4d, 4e, 4f,4g,8a,9a,9d, 10b,10c,12b	Clear, Horizontal
		1500	23826	Q1500T3/CL-12PK	220	144	C-8	10.06	6.18	2000		35800	3050			1a,2a,2j,2k,4a,4c,4d, 4e, 4f,4g,8a,9a,9d, 10b,10c,12b	Clear, Horizontal
		1500	23830	Q1500T3/CL	240	12	C-8	10.06 cm	6.31 cm	2000		32000	3050			1a,2a,2j,2k,4a,4c,4d, 4e, 4f,4g,8a,9a,9d, 10b,10c,12b	Clear, Horizontal
		1500	23832	Q1500T3/CL	277	12	C-8	10.06	6.25	2000		34400	3050			1a,2a,2j,2k,4a,4c,4d, 4e, 4f,4g,8a,9a,9d, 10b,10c,12b	Clear, Horizontal

* Based on 3 hours per day use.
** Based on 3 hours per day use, $0.11 per Kwh

For the most up-to-date product information, see www.gelighting.com. To convert inches to millimeters, multiply by 25.4.
All warning and caution notices found at the end of this section (page 2-17).

Bulb Shape	Base Type	Watts	Order Code	Description	Volts	Case Qty	Filament Type	MOL (in)	LCL (in)	Rated Life (hrs)	Rated Life (yrs*)	Initial Lumens	Initial Color Temp	CBCP	Annual Operating Costs**	Warning and Caution Notices	Additional Information
Quartzline® (continued)																	
Halogen PAR56																	
PAR56	Mog End Pr	500	43494	Q500PAR56NSP	120	6	CC-6	5		4000		8000	2950	96000		1a,2a,2j,4b,4c,4f,4g, 7a,9b,10c	Narrow Spot
		500	43495	Q500PAR56MFL	120	6	CC-6	5		4000		8000	2950	43000		1a,2a,2j,4b,4c,4f,4g, 7a,9b,10c	Medium Flood
		500	43496	Q500PAR56WFL	120	6	CC-6	5		4000		8000	2950	19000		1a,2a,2j,4b,4c,4f,4g, 7a,9b,10c	Wide Flood
Halogen PAR64																	
PAR64	ExMog EndPr	1000	43497	Q1000PAR64NSP	120	6	CC-6	5		4000		19400	3000	200000		1a,2a,2j,4b,4c,4f,4g, 7a,9b,10c	Narrow Spot
		1000	43498	Q1000PAR64MFL	120	6	CC-6	5		4000		19400	3000	80000		1a,2a,2j,4b,4c,4f,4g, 7a,9b,10c	Medium Flood
		1000	43499	Q1000PAR64WFL	120	6	CC-6	5		4000		19400	3000	33000		1a,2a,2j,4b,4c,4f,4g, 7a,9b,10c	Wide Flood
Halogen Miniature Candelabra Screw (E11)																	
T4	Mini-Cand	100	16452	Q100MC	120	6	CC-8	2.81	1.38	2000		1550	2950			1a,2a,2j,4a,4c,4e,4f,4g, 9a,9d,10b,10c,12e	Frosted
		100	15507	Q100CL/MC	120	6	CC-8	2.81	1.38	2000		1600	2950			1a,2a,2j,4a,4c,4e,4f,4g, 9a,9d,10b,10c,12e	Clear
		100	44385	Q100CL/MC/2V	120	6	CC-2V	2.81	1.38	750 H		1800	2950			1a,2a,2j,4a,4c,4e,4f,4g, 9a,9d,10b,10c,12e	Clear
		100	19383	Q100CL/MC/CD 5PK	120	25	CC-8	2.81	1.38	2000		1600	2950			1a,2a,2j,4a,4c,4e,4f,4g, 9a,9d,10b,10c,12e	Clear, Carded
T3	Mini-Cand	75	12715	Q75CL/MC/CD	120	25	CC-8	2.50	1.25	1000		1050	2950			1a,2a,2j,4a,4c,4e,4f,4g, 8a,9a,9d,10b,10c,12e	Clear, Carded
T4	Mini-Cand	150	44654	Q150MC	120	6	CC-8	3.00	1.38	2000		2700	2950			1a,2a,2j,4a,4c,4e,4f,4g, 8a,9a,9d,10b,10c,12e	Frosted
		150	43694	Q150CL/MC	120	6	CC-8	3.00	1.38	2000		2800	2950			1a,2a,2j,4a,4c,4e,4f,4g, 8a,9a,9d,10b,10c,12e	Clear
		150	19386	Q150CL/MC/CD 5PK	120	25	CC-8	3.00	1.38	2000		2800	2950			1a,2a,2j,4a,4c,4e,4f,4g, 8a,9a,9d,10b,10c,12e	Clear, Carded
		250	43695	Q250MC	120	6	CC-8	3.16	1.63	2000		4850	2950			1a,2a,2j,4a,4c,4e,4f,4g, 8a,9a,9d,10b,10c,12e	Frosted
		250	43696	Q250MC	130/120	6	CC-8	3.16	1.63	2000		4850	2950			1a,2a,2j,4a,4c,4e,4f,4g, 8a,9a,9d,10b,10c,12e	Frosted
		250	43699	Q250CL/MC	120	6	CC-8	3.16	1.63	2000		5000	2950			1a,2a,2j,4a,4c,4e,4f,4g, 8a,9a,9d,10b,10c,12e	Clear
		250	43700	Q250CL/MC	130/120	6	CC-8	3.16	1.63	2000		5000	2950			1a,2a,2j,4a,4c,4e,4f,4g, 8a,9a,9d,10b,10c,12e	Clear
		400	43706	Q400MC	120	6	CC-8	3.62	2.00	2000		7850	2950			1a,2a,2j,4a,4c,4e,4f,4g, 8a,9a,9d,10b,10c,12e	Frosted
		400	43707	Q400CL/MC	120	6	CC-8	3.62	2.00	2000		8250	2950			1a,2a,2j,4a,4c,4e,4f,4g, 8a,9a,9d,10b,10c,12e	Clear
		500	47950	Q500CL/MC (EVR)	120	6	CC-8	3.62	2.00	2000		10450	2950			1a,2a,2j,4a,4c,4e,4f,4g, 8a,9a,9d,10b,10c,12e	Stage and Studio
Other																	
T4	DC PreFoc	45	14473	Q45T4/CL/DCR	6.6A	12	C-6	2.60	1.06	500		845	2850			1a,2a,2j,2k,4a,4c,4e,4f, 4g,8a,9a,9d,10b,10c	Airport and Airfield
	2-Pin Prefoc GY16d	200	40702	Q200T4/CL	200	12	CC-6	2.50	1.53	500		4500	3100			2a,2j,4a,4c,4d,4e,4f,4g, 8a,9a,9d,10b,10c	Clear, Airport, Base Down
T8	1" Ribbon Leads	500	88616	Q500T8/1CL	120	12	CC-8	4.25	2.50	500		13400	3200			1a,2a,2j,2k,4a,4c,4d,4e, 4f,4g,8a,9a,9d,10b, 10c,12b	Clear, Airport, Special Bulb
Airport																	
T4	PK30D	100	80584	Q6.6A100PK30d-m	6.6A	10	CBAR-6	2	0.79	1000		2700				2a,2j,4a,4c,4e,4f,4g, 8a,9a,9d,10b,10c	Airport, Male Spade
T8	PK30D	200	80586	Q6.6A200PK30d-m	6.6A	10	CC-6	2.3	0.79	1000		4800				2a,2j,4a,4c,4e,4f,4g, 8a,9a,9d,10b,10c	Airport, Male Spade
T9	PK30D	200	80590	Q6.6A200PK30d-f	6.6A	10	CC-6	2.3	0.79	1000		4800				2a,2j,4a,4c,4e,4f,4g, 8a,9a,9d,10b,10c	Airport, Female Spade
T4	1" Ribbon Leads	200	23857	Q6.6A/T4/5CL	6.6A	12	CC-8	3.00		500		5000				2a,2j,4a,4c,4e,4f,4g,8a, 9a,9d,10b,10c	Clear, Airport

* Based on 3 hours per day use.
** Based on 3 hours per day use, $0.11 per Kwh

For the most up-to-date product information, see www.gelighting.com. To convert inches to millimeters, multiply by 25.4.
All warning and caution notices found at the end of this section (page 2-17).

Bulb Shape	Base Type	Watts	Order Code	Description	Volts	Case Qty	Filament Type	MOL (in)	LCL (in)	Rated Life (hrs)	Rated Life (yrs*)	Initial Lumens	Initial Color Temp	CBCP	Annual Operating Costs**	Warning and Caution Notices	Additional Information
Airport (continued)																	
T4	D C Bay BA15d	200	23860	Q6.6AT4/DCR	6.6A	12	CC-6	2.50	1.06	500		5150				2a,2j,4a,4c,4e,4f,4g,8a, 9a,9d,10b,10c,12e	Clear, Airport, Ringed
PAR56	Scrw Term	200	33279	Q6.6A PAR56/3	6.6A	12	CC-6	4.5		1000				200000		2a,2j,4b,4c,4d,4f,4g, 7a,9b,10c	PAR, Airport, BDTH
PAR56	Mog End Pr	200	38271	Q6.6A PAR56/2	6.6A	12	CC-6	5		1000				16000		2a,2j,4b,4c,4d,4f,4g, 7a,9b,10c	PAR, Airport, BDTH
PAR56	Mog End Pr GX16d	200	18309	Q6.6A/PAR56/4	6.6A	12	CC-6	5.00		600						2a,2j,4b,4c,4d,4f,4g, 7a,9b,10c	PAR, Airport, Prismatic Lens, BDTH
PAR64	Mog End Pr	200	13224	Q6.6A/PAR 64/2P	6.6A	6	CC-6	4.5		2000				16000		2a,2j,4b,4c,4d,4f, 4g,7a,9b,10c	PAR, Airport, BDTH
PAR56	Scrw Term	300	32861	Q20A/PAR56/2		12	CC-6	4.5		500				200000		2a,2j,4b,4c,4f,4g, 7a,9b,10c	PAR, Airport, Burn Position: Any
PAR56	Mog End Pr	300	15482	Q20A/PAR56/C		12	CC-6	5		500						2a,2j,4c,4f,4g,7a, 9b,10c	PAR, Airport, Coated, Burn Position: Any
PAR56	Scrw Term	499	23863	Q20A/PAR56/3		12	CC-6	4.5		500				330000		2a,2j,4b,4c,4d,4f, 4g,7a,9b,10c	PAR, Airport, BDTH
PAR56	Mog End Pr	500	15485	Q20A/PAR56/1/C		12	CC-6	5		500						2a,2j,4c,4f,4g,7a, 9b,10c	PAR, Airport, Coated, Burn Position: Any
Tubular Quartz Heat																	
Sleeve																	
T3	Sleeve	500	21788	QH500T3/CL	120	12	C-8	8.80	4.81	5000			2400			1a,2a,2b,3a,4c,4d,4e, 4f,4g,9a,9d,10b,10c, 12b,12e	Infrared, Clear
		1000	22355	QH1000T3/CL	210	12	C-8	13.80	10.00	5000			2400			1a,2a,2b,3a,4c,4d,4e, 4f,4g,9a,9d,10b,10c, 12b,12e	Infrared, Clear
Recessed Single Contact (R7s)																	
T3	Sleeve	1000	22357	QH1000T3/CL	240	12	C-8	13.81	10.00	5000			2400			1a, 2a, 2b, 3a, 4c, 4d, 4e, 4f, 4g, 9a, 9d, 10b, 10c, 12b, 12e	Infrared, Clear
		1200	22531	QH1200T3/CL	144	12	C-8	8.80	6.13	5000			2450			1a, 2a, 2b, 3a, 4c, 4d, 4e, 4g, 9a, 9d, 10b, 10c, 12b, 12e	Infrared, Clear, Horizontal
		1200	22532	QH1200T3/CL/HT	144	12	C-8	8.80	6.13	5000			2450			1a, 2a, 2b, 3a, 4c, 4d, 4e, 4f, 4g, 9a, 9d, 10b, 10c, 12b, 12e	Infrared, Clear, High Temp, Construction, Horizontal
		1600	22686	QH1600T3/CL	210	12	C-8	19.80	15.88	5000			2350			1a,2a,2b,3a,4c,4d,4e, 4f,4g,9a,9d,10b,10c, 12b,12e	Infrared, Horizontal
		1600	22688	QH1600T3/CL	240	12	C-8	19.80	15.88	5000			2400			1a,2a,2b,3a,4c,4d,4e, 4f,4g,9a,9d,10b,10c, 12b,12e	Infrared, Clear, Horizontal
		1600	22695	QH1600T3/CL	277	12	C-8	19.80	15.88	5000			2400			1a,2a,2b,3a,4c,4d,4e, 4f,4g,9a,9d,10b,10c, 12b,12e	Infrared, Horizontal
		2500	22838	QH2500T3/CL	480	12	C-8	28.80	24.88	5000			2400			1a,2a,2b,3a,4c,4d,4e, 4f,4g,9a,9d,10b,10c, 12b,12e	Infrared, Clear, Horizontal
		3800	22875	QH3800T3/CL	575	6	C-8	41.80	38.00	5000			2500			1a,2a,2b,3a,4f, 5a,5b,9a, 9d,10c, 12b,12e	Infrared, Horizontal
T3	R7s	500	21787	QH500T3/CL/7	120	12	C-8	8.80	4.81	5000			2400			1a,2a,2b,3a,4c,4d,4e, 4f,4g,9a,9d,10b,10c, 12b,12e	Infrared, Clear
		1600	22691	QH1600T3/CL/7	240	12	C-8	19.80	15.88	5000			2400			1a,2a,2b,3a,4c,4d,4e, 4f,4g,9a,9d,10b,10c, 12b,12e	Infrared, Clear, Horizontal
T3	R7s	3650	10872	QH3650T3/CL/5	480	6	C-8	41.63	38.00	5000			2500			1a,2a,2b,3a,4f,5a,5b, 9a, 9d,10c,12b,12e	Infrared, Horizontal

* Based on 3 hours per day use.
** Based on 3 hours per day use, $0.11 per Kwh

For the most up-to-date product information, see www.gelighting.com. To convert inches to millimeters, multiply by 25.4.
All warning and caution notices found at the end of this section (page 2-17).

Bulb Shape	Base Type	Watts	Order Code	Description	Volts	Case Qty	Filament Type	MOL (in)	LCL (in)	Rated Life (hrs)	Rated Life (yrs*)	Initial Lumens	Initial Color Temp	CBCP	Annual Operating Costs**	Warning and Caution Notices	Additional Information
Tubular Quartz Heat (continued)																	
Other																	
T3	Ceramic Sleeve	2000	12716	QH2MT3/CL/HT/R	230	12	C-8	13.00	11.00	5000			2450			1a,2a,2b,3a,4c,4d,4e, 4f,4g,9a,9d,10b,10c, 12b,12e	Infrared, Clear, High Temp, Horizontal, Reflector 170°
T3	Sleeve	2000	15551	QH2MT3/1CL/HT/VB	240	12	C-8	11.90	9.60	500			2450			1a,2a,2b,3a,4c,4d,4e, 4f,4g,9a,9d,10b,10c, 12b,12e	Infrared, Clear, High Temp, Construction, Universal
	Sleeve	2000	22790	QH2M/T3/CL/HT	225	12	C-8	18.80	10.00	5000			2450			1a,2a,2b,3a,4c,4d,4e, 4f,4g,9a,9d,10b,10c, 12b,12e	Infrared, Clear, High Temp, Construction, Horizontal
	CER	2500	28126	QH2.5MT3/CL/HT/R	400	12	C-8	15.1	12.3	5000			2450			1a,2a,2b,3a,4c,4d,4e, 4f,4g,9a,9d,10b,10c, 12b,12e	Infrared, High Temp, Horizontal, Reflector 170
	CER	3000	28127	QH3MT3/CL/HT/R	400	12	C-8	15.1	12.3	5000			2450			1a,2a,2b,3a,4c,4d,4e, 4f,4g,9a,9d,10b,10c, 12b,12e	Infrared, High Temp, Horizontal, Reflector 170
T3	Wire Lead	6000	23843	QH6MT3/CL/HT	480	12	C-8	11.90	9.70	100			3250			1a,2a,2b,4c,4d,4e,4f,4g, 9a,9d,10b,10c,12b,12e	Infrared, Clear, High Temp, Horizontal

* Based on 3 hours per day use.
** Based on 3 hours per day use, $0.11 per Kwh

For the most up-to-date product information, see www.gelighting.com. To convert inches to millimeters, multiply by 25.4.
All warning and caution notices found at the end of this section (page 2-17).

General Information

Halogen Lamp Operating Precautions

The lamps listed in this catalog are filled to high internal gas pressures to maximize lamp efficacy (lumens per watt). Some general cautions are given below.

High Operating Temperatures

Since operating temperatures are critical to the effective self-cleaning properties of halogen lamps, filament tube wall temperatures should not go below 482°F (250°C). Hot spots on the bulb wall itself can go as high as 1230°F (700°C) in normal operation.

Substantial heat is generated in all halogen lamps, so equipment design should make allowance for the dissipation of excessive heat. Certain lamps and extremely confined fixtures may require additional ventilation or heat sinking to ensure proper operation of the halogen cycle and to prevent damage to the fixture. It is a good practice to test the lamp in the operating environment early in the design cycle to ensure adequate performance. Precautions must be taken in the selection of materials for lampholders, reflectors and lamp housings because the 1230°F (700°C) bulb wall temperature is greater than the kindling temperature of many materials. Lamp base temperatures should not exceed 662°F (350°C) because, above that point, lead wires may deteriorate and the basing cement loosen, causing premature lamp failure.

Distribution of Spectral Radiation

Halogen lamps offer large amounts of visible and infrared energy from a small light source, with about 90% of the energy in the infrared. Some halogen lamps can be used for special applications where small amounts of ultraviolet energy are required. The slight ultraviolet radiation that comes from unprotected sources could cause skin and eye irritation following extended direct exposure. Passing the light through ordinary glass or plastic provides adequate protection. The lenses of the PAR, TAL or Cover Glass Precise™ lamps provide this protection.

Quartz Heat Lamps

GE standard quartz heat products are primarily pressurized halogen lamps. Many standard tungsten coil filaments have been converted to a deflection coil winding design that eliminates the need for filament supports through an integral coil/support construction. These changes will improve lamp life as well as keep the bulb wall cleaner during operation and throughout the life of the lamp.

In general, halogen lamps are more efficient than ordinary incandescent lamps. HIR™ lamps are the most efficient halogen lamps we offer. For each application, check life, lumens, wattage, beam spread and lamp dimensions to determine proper bulb selection.

GE has added a reflectorized heat lamp with a patented design that directs the infrared to a surface rather than in 360° angle.

Halogen Caution Notice – General

Halogen lamps are constructed of a glass bulb with a pressurized internal filament tube that operates at high temperatures and could unexpectedly shatter. Should the outer bulb break, particles of extremely hot glass could be discharged into the fixture enclosure and/or surrounding environment, thereby creating a risk of personal injury or fire.

Operating Notes

- Turn power off and let lamp cool before removal to avoid potential burn and electrical shock during lamp replacement
- Do not use lamp if outer glass is scratched or broken because it may break during installation or later during operation
- Do not use lamp in close proximity to combustible materials or those adversely affected by drying or fading action because of heat radiation in the lamp beam
- Dispose of removed lamp with care such as placing in used lamp carton or other closed container

Compact PAR Lamps (PAR20/30)

- Use outdoors in enclosed fixtures or where protected from exposure to water

Quartzline® PAR (250W)

- Avoid use where exposured to moisture which may cause lamp to break or shatter
- Do not operate lamp over 110% rated voltage. Overvoltage operation increases pressure and tendency to break.
- Use this lamp only in fixtures designed for Q250PAR38 lamps

Halogen A-Line (TB/H)

Caution: Cracked or broken bulbs that still light should be replaced immediately. The inner tube of the GE Halogen lamp is pressurized, operates at high temperature and could unexpectedly shatter with the possibility of property damage or personal injury. Avoid use in unstable table lamps, dispose of with care. To avoid burns, electricity should be switched off and the lamp allowed to cool for several minutes before removing from socket. Use outdoors only in enclosed fixtures or where protected from exposure to water.

Operating Notes – Low Voltage Lamps

Low voltage tungsten-halogen lamps are sensitive to voltage variations. Even a small change in voltage can have a considerable impact on lamp life. Designers should match fixture transformer ratings to actual line voltages to ensure that the lamps operate at as close to 12 volts as possible.

Rapid cycling can also shorten lamp life, and designers should take advice from their GE Lighting representative before using these lamps in flashing or blinking applications.

The lamps may be dimmed by reducing voltage. However, this may cause the bulbs to blacken. If this occurs the lamp should be run at full voltage for fifteen minutes, thereby clearing the problem. Note that the nature of low voltage lighting systems requires the use of fluorescent-type dimmers. Lamp can be operated on AC or DC currents.

Warning and Caution Notices

1

⚠ WARNING

Risk of electric shock

a. Turn power off before inspection, installation or removal
b. Turn power off if glass bulb is broken, even if bulb continues to light. Remove and dispose of lamp.
c. Do not open. No user serviceable parts inside.

2

⚠ WARNING

Risk of fire

a. Keep combustible materials away from lamp
b. Use in fixture rated for this product
c. Use in fixture rated for this product—see instructions
d. Operate base down to horizontal only
e. In table lamp use only with shade
f. Do not use in enclosed fixture or with lamp shade
g. Use in high intensity fixture rated for this product
h. Do not use as a night light
i. Burning position base down only
j. Use in enclosed fixture rated for this product
k. Fire Hazard! Do not use in Torchieres or other indoor residential fixtures

3

⚠ WARNING

Lamp emits IR radiation which may cause eye injury

a. Avoid exposure of eyes and skin to unshielded lamp

4

⚠ WARNING

Pressurized lamp—unexpected rupture may cause injury, fire, or property damage

a. Use eye protection when handling lamp
b. Avoid direct water/liquid contact
c. Use in enclosed fixture rated for this product
d. Operate lamp only in specified position
e. Do not touch glass with bare hands
f. Do not use lamp if outer glass is scratched or broken
g. Do not exceed 110% of rated voltage
h. Do not use where directly exposed to water or outdoors without an enclosed fixture
i. Do not exceed rated voltage
j. Do not use lamp if outer jacket is scratched or broken, even if bulb continues to light. Turn power off, remove and dispose.
k. Do not use in wet locations

5

⚠ WARNING

Unexpected lamp rupture may cause injury, fire, or property damage

a. Do not touch glass with bare hands
b. Operate lamp only in specified position
c. Use in enclosed fixture rated for this product
d. Do not use lamp if outer glass is scratched or broken
e. Avoid direct water, liquid or metal contact

6

⚠ WARNING

Risk of burn

a. Do not touch operating lamp

7

⚠ WARNING

A damaged lamp emits UV radiation which may cause eye/skin injury

a. Turn power off if glass bulb is broken. Remove and dispose of lamp.

8

⚠ WARNING

Lamp emits UV radiation which may cause eye/skin injury.

a. Avoid exposure of eyes and skin to unshielded lamp

9

⚠ CAUTION

Risk of burn

a. Allow lamp to cool before handling
b. Allow lamp/fixture to cool before handling
c. Do not touch operating lamp
d. Turn power off before installing lamp

10

⚠ CAUTION

Lamp may shatter and cause injury if broken

a. Wear safety glasses and gloves when handling lamp
b. Dispose of lamp in a closed container
c. Do not use lamp if outer glass is scratched or broken

11

⚠ CAUTION

Lamp emits UV radiation which may cause eye/skin irritation.

a. Minimize exposure

12

OP. INST.

a. Burning position – base up
b. Burning position – horizontal
c. Burn base down only
d. Burn base down to horizontal
e. Limit seal temp to 650°F. Maintain min bulb wall temp of 500°F for operation of halogen cycle

Cross-Reference

GE Description	Osram/ Sylvania Description	Philips Description
Order This GE Lamp	If you currently use these lamps	
Halogen PAR Lamps		
60PAR16/H/SP10	60PAR16/CAP/NSP10	60PAR16/HAL/NSP10
60PAR16/H/FL30	60PAR16/CAP/NFL30	60PAR16/HAL/NFL27
75PAR16/H/SP10	75PAR16/CAP/NSP10	–
75PAR16/H/FL30	75PAR16/CAP/NFL30	–
50PAR20/H/SP10	50PAR20/CAP/SPL/NSP10	50PAR20/HAL/NSP9
50PAR20/H/FL25	50PAR20/CAP/SPL/NFL30	50PAR20/HAL/NFL30
50PAR30/H/SP10	50PAR30/CAP/SPL/NSP9	50PAR30S/HAL/NSP10
50PAR30/H/FL25	50PAR30/CAP/SPL/NFL25	50PAR30S/HAL/NFL30
50PAR30/H/FL35	50PAR30/CAP/SPL/FL40	50PAR30S/HAL/FL40
50PAR30L/H/SP10	50PAR30LN/CAP/SPL/NSP9	50PAR30L/HAL/NSP9
50PAR30L/H/FL40	50PAR30LN/CAP/SPL/NFL30	50PAR30L/HAL/NFL30
50PAR30L/H/WFL	50PAR30LN/CAP/SPL/WFL50	50PAR30L/HAL/WFL60
60PAR30/H/NSP9	60PAR30/CAP/SPL/NSP9	60PAR30S/HAL/NSP10
60PAR30/H/FL25	60PAR30/CAP/SPL/NFL25	60PAR30S/HAL/NFL30
60PAR30/H/FL35	–	60PAR30S/HAL/NFL40
75PAR30/H/SP10	75PAR30/CAP/SPL/NSP9	75PAR30S/HAL/NSP10
75PAR30/H/FL25	75PAR30/CAP/SPL/NFL25	75PAR30S/HAL/NFL30
75PAR30/H/FL35	75PAR30/CAP/SPL/FL40	75PAR30S/HAL/FL40
75PAR30L/H/SP10	75PAR30LN/CAP/NSP9	75PAR30L/HAL/NSP9
75PAR30L/H/FL25	75PAR30LN/CAP/NFL25	75PAR30L/HAL/NFL30
75PAR30L/H/WFL	75PAR30LN/CAP/WFL40	75PAR30L/HAL/FL40
45PAR/H/SP10	45PAR/CAP/SPL/SP9	45PAR38/HAL/SP12/LL
45PAR/H/FL25	45PAR/CAP/SPL/FL30	45PAR38/HAL/FL28/LL
50PAR/H/SP10	50PAR38/HAL/SP9	–
50PAR/H/FL25	50PAR38/HAL/FL30	–
60PAR/H/SP10	60PAR/CAP/SPL/SP10	60PAR38/HAL/NSP10/WLL
60PAR/H/FL25	60PAR/CAP/SPL/NSL25	60PAR38/HAL/FL28/WLL
75PAR/H/NSP9	75PAR/CAP/SPLSP9	75PAR38/HAL/SP10/WLL
75PAR/H/FL25	75PAR/CAP/SPL/FL30	75PAR38/HAL/FL28/WLL
90PAR/H/SP10	90PAR/CAP/SPL/SP9	90PAR38/HAL/SP12/LL
90PAR/H/FL25	90PAR/CAP/SPL/FL30	90PAR38/HAL/FL28/LL
90PAR/H/WFL	90PAR/CAP/SPL/WFL50	90PAR38/HAL/WFL60/WLL
100PAR/H/SP10	100PAR38/HAL/SP9	–
100PAR/H/FL25	100PAR38/HAL/FL30	–
120PAR/H/SP9	120PAR/CAP/SPL/SP10	–
120PAR/H/FL30	120PAR/CAP/SPL/FL30	–
Halogen HIR™ PAR Lamps		
45PAR30/HIR/SP9XL	–	45PAR30/IRC/HAL/SP10
45PAR30/HIR/FL25XL	–	45PAR30/IRC/HAL/FL25
45PAR30/HIR/FL35XL	–	45PAR30/IRC/HAL/FL40
50PAR30/HIR/SP9	50PAR30/CAP/IR/NSP9	50PAR30S/IRC/NSP10
50PAR30/HIR/FL25	50PAR30/CAP/IR/NFL25	50PAR30S/IRC/NFL30
50PAR30/HIR/FL35	50PAR30/CAP/IR/FL40	50PAR30S/IRC/FL40
Halogen HIR™ PAR38 Lamps		
45PAR/HIR/FL40XL	–	45PAR38/IRC/WFL
45PAR/HIR+/SR10	–	–
45PAR/HIR+/FL25	–	–
48PAR/HIR+/SP10	–	–
48PAR/HIR+/FL25	–	–
50PAR/HIR/SP6	–	–
50PAR/HIR/SP9	50PAR38/CAP/IR/SP9	50PAR38/IRC/SP10
50PAR/HIR/FL25	50PAR38/CAP/IR/NFL25	50PAR38/IRC/FL25
50PAR/HIR/S/SP10	–	–
50PAR/HIR/S/FL25	–	–
55PAR/HIR+/SP10	–	–
55PAR/HIR+/FL25	–	–
60PAR/HIR/SP10	60PAR38/CAP/IR/SP9	60PAR38/IRC/SP12
60PAR/HIR/FL30	60PAR38/CAP/IR/FL30	60PAR38/IRC/FL25
60PAR/HIR/FL40	–	60PAR38/IRC/HAL/FL40
60PAR/HIR/S/SP10	–	–

GE Description	Osram/ Sylvania Description	Philips Description
Order This GE Lamp	If you currently use these lamps	
Halogen HIR™ PAR38 Lamps (continued)		
60PAR/HIR/S/FL25	–	–
60PAR/HIR+/SP10	–	–
60PAR/HIR+/FL25	–	–
67PAR/HIR+/SP10	–	–
67PAR/HIR+/FL25	–	–
70PAR/HIR/SP10	–	70PAR38/IRC/HAL/SP10
70PAR/HIR/FL25	–	70PAR38/IRC/HAL/FL25
80PAR/HIR/SP10	80PAR/CAP/IR/SP10	–
80PAR/HIR/SP12	80PAR/CAP/IR/SP12	–
80PAR/HIR/FL25	80PAR/CAP/IR/FL25	–
83PAR/HIR+/SP10	–	–
83PAR/HIR+/FL25	–	–
90PAR/HIR/SP12XL	–	–
90PAR/HIR/FL40XL	–	–
100PAR/HIR/SP10	100PAR/CAP/IR/SP10	100PAR38/IRC/SP10
100PAR/HIR/FL25	100PAR/CAP/IR/NFL25	100PAR38/IRC/FL25
100PAR/HIR/FL40	100PAR/CAP/IR/FL40	100PAR38/IRC/WFL
Halogen MR11 Lamps		
Q20MR11/SP15	20MR11/SP10/FTB	20MRC11/SP10
Q20MR11/NFL30	20MR11/FL35/FTD	20MRC11/FL30
Q35MR11/NSP20	35MR11/SP10/FTE	–
Q35MR11/NFL30	35MR11/FL40/FTH	35MRC11/FL30
Halogen Standard MR16 Lamps		
Q20MR16/SP	20MR16/NSP8/ESX	20MRC16/SP10
Q20MR16/FL	20MR16/FL40/BAB	20MRC16/FL36
Q50MR16/SP	50MR16/NSP12/EST	50MRC16/SP10
Q50MR16/FL	20MR16/FL40/EXN	50MRC16/FL38
Halogen ConstantColor® Precise™ MR16 Lamps		
Q20MR16/C/VNSP7	20MR16/T/NSP/10	20MRC16/CC/SP10
Q20MR16/C/NSP15	–	20MRC16/CC/NFL24
Q20MR16/C/FL40	20MR16/T/NFL40	20MRC16/CC/FL38
Q35MR16/C/SP20	35MR16/T/NFL25	–
Q35MR16/C/FL40	35MR16/T/FL40	–
Q42MR16/C/VNSP9	50MR16/T/NSP10	–
Q50MR16/C/NSP15	–	50MRC16/CC/SP10
Q50MR16/C/NFL25	50MR16/T/NFL25	50MRC16/CC/NFL24
Q50MR16/C/NFL30	–	–
Q50MR16/C/FL40	50MR16/T/FL40	50MRC16/CC/NFL38
Q50MR16/C/WFL55FNV	50MR16/T/WFL60	–
Q71MR16/C/NSP15	65MR16/T/NSP10	–
Q71MR16/C/NFL25	65MR16/T/NFL25	–
Q71MR16/C/FL40	65MR16/T/FL40	–
Halogen HIR™ MR16 Lamps		
Q20MR16/HIR/CG10	20MR16/IR/SP10/C	20MRC16/IRC/ALW/SP8
Q20MR16/HIR/CG25	20MR16/IR/NFL25/C	–
Q20MR16/HIR/CG35	20MR16/IR/FL35/C	20MRC16/IRC/ALW/FL36
Q37MR16/HIR/CG10	37MR16/IR/NSP10C	35MRC16/IRC/SP8
Q37MR16/HIR/CG25	37MR16/IR/NFL25C	35MRC16/IRC/NFL24
Q37MR16/HIR/CG40	37MR16/IR/FL40C	35MRC16/IRC/FL36
Q50MR16/HIR/CG10	50MR16/IR/NSP10C	45MRC16/IRC/SP8
Q50MR16/HIR/CG25	50MR16/IR/NFL25C	45MRC16/IRC/NFL24
Q50MR16/HIR/CG40	50MR16/IR/FL40C	45MRC16/IRC/FL36
Halogen Bi-Pin Low Voltage		
Q5T3/CL	5T3Q/CL	5W12V/Capsule
Q10T3/CL	10T3Q/CL	10W12V/Capsule
Q20T3/CL	20T3Q/CL/AX	20W12V/Capsule
Q35T3/CL	35TQ/CL/AX	35W12V/Capsule
Q50T3/CL	50T4Q/CL	50W12V/Capsule
Q75T4/CL	75T4Q/CL/RP	

Cross-Reference (continued)

GE Description	Osram/ Sylvania Description	Philips Description
Order This GE Lamp	If you currently use these lamps	
Halogen Single-Ended		
Q100CL/DC	100Q/CL/DC	100Q/CL/DC
Q100CL/MC	100Q/CL/MC	100Q/CL
Q100DC	100Q/DC	–
Q150CL/DC/2V	150Q/CL/DC/1	–
Q150CL/DC	150Q/CL/DC	150Q/CL/DC
Q150CL/MC	150Q/CL/MC/2	150Q/CL
Q150CL/MC/2V	150Q/CL/MC	–
Q150DC	150Q/DC	150Q/DC
Q150MC	150Q/MC	150Q
Q250CL/DC	250Q/CL/DC	250Q/CL/DC
Q250CL/MC	250Q/CL/MC/2	250Q/CL
Q250DC	250Q/DC	–
Q250MC	250Q/MC	–
Halogen Double-Ended		
Q100T3/CL/CD	100T3Q/CL	BC100T3Q/CL/TP
Q150T3/CL	150T3Q/CL	BC100T3Q/CL/TP
Q300T3/CL	300T3Q/CL	300T3Q/P/CL
Q500T3/CL	500T3Q/CL	500T3Q/P/CL

Notes

High Intensity Discharge Lamps

Bulb Identification

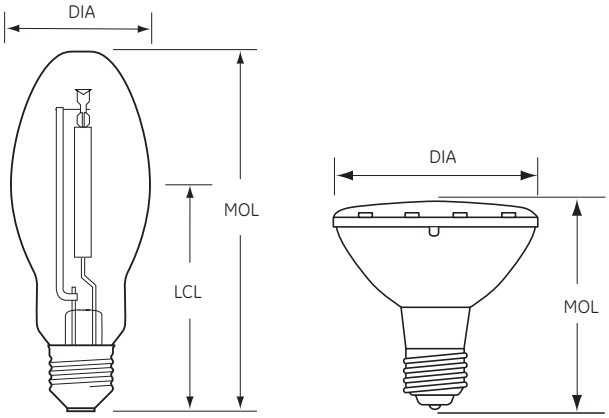

DIA: Diameter of bulb at widest point.

MOL: Maximum Overall Length including base or pins.

LCL: Distance between the center of the arc tube and the Light Center Length reference plane.

Note: Lamp drawings are not drawn to scale. Be sure to check size and dimension information when identifying each lamp.

To convert inches to millimeters, multiply the dimension (in inches) by 25.4 (i.e. 1.5" x 25.4 = 38.1 mm).

Lamp Locator

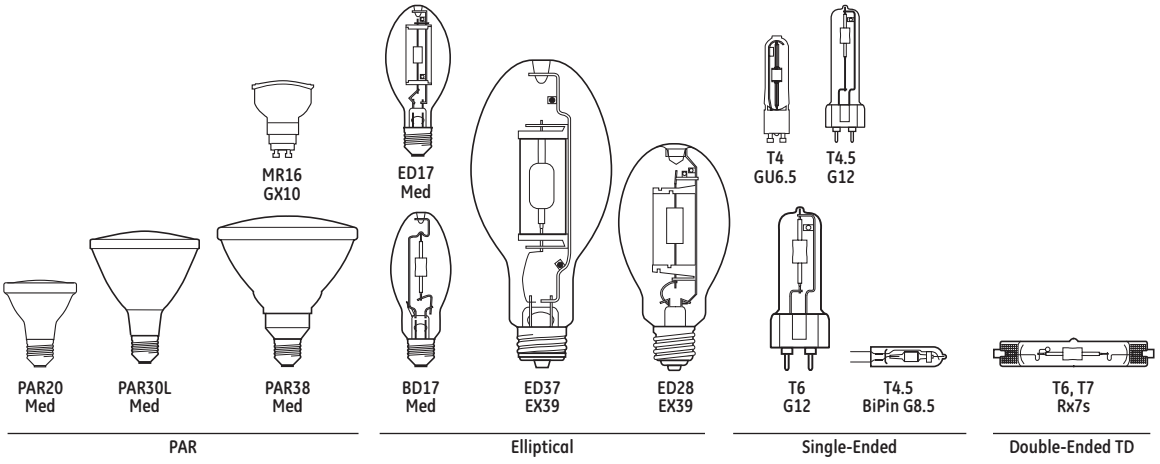

ConstantColor® CMH® Ceramic Metal Halide

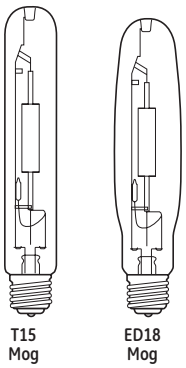

CMH® Chromafit™ Ceramic Metal Halide (HPS Retrofit Lamps)

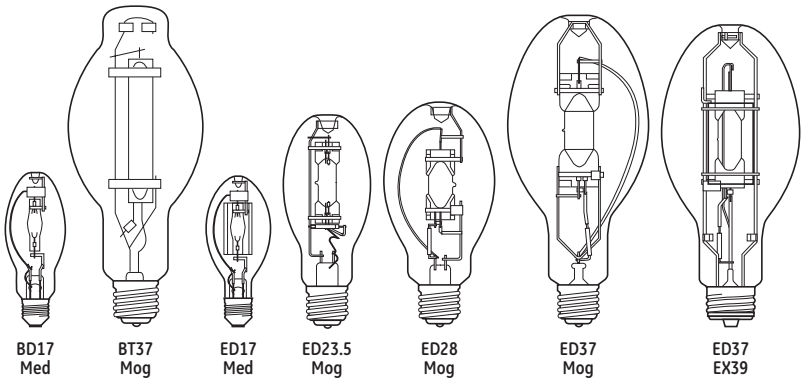

PulseArc® Multi-Vapor® Metal Halide Lamps

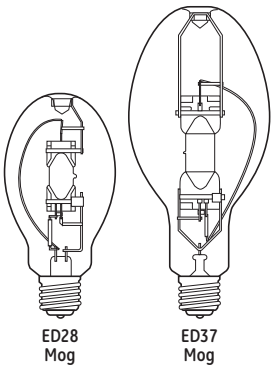

Chromafit™ Multi-Vapor® Metal Halide Lamps (HPS Retrofit Lamps)

Lamp Locator (continued)

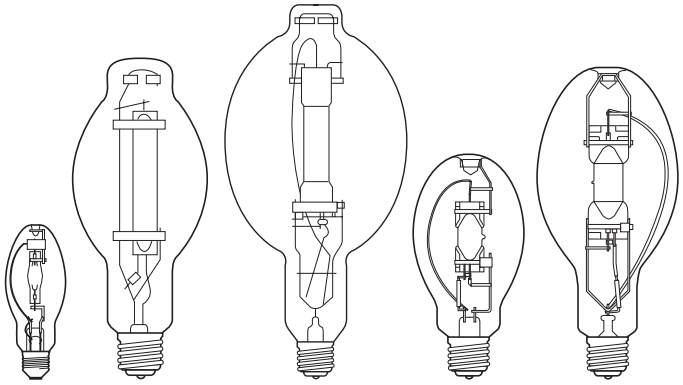

BD17 Med | BT37 Mog | BT56 Mog | ED28 Mog | ED37 Mog

Multi-Vapor® Metal Halide Lamps

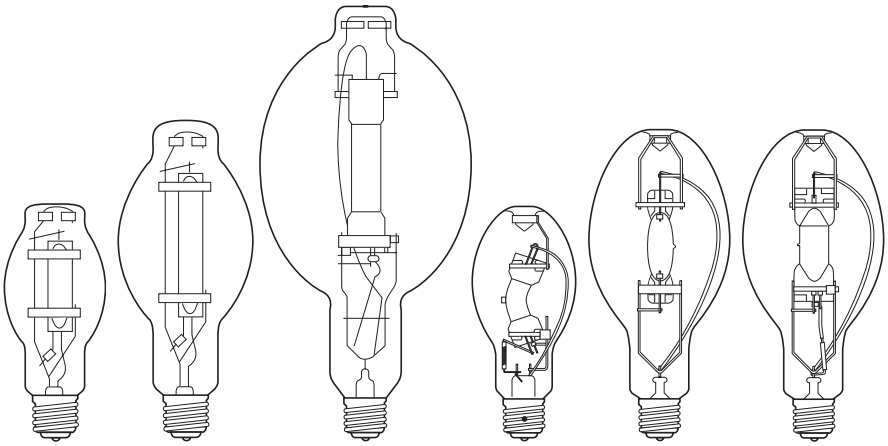

BT28 Mog | BT37 Mog | BT56 Mog | ED28 Pos Mog | ED37 Mog | ED37 Mog

High Output and XHO Multi-Vapor® Metal Halide Lamps

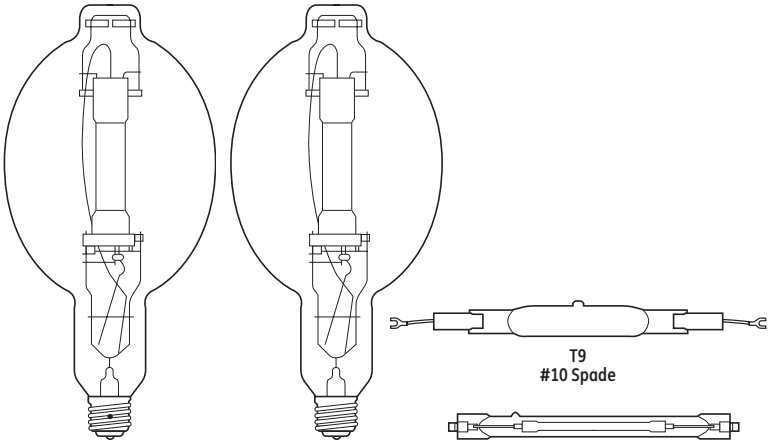

BT56 Pos Mog | BT56 Mog | T9 #10 Spade | T7 Rx7s

Sports Lighting

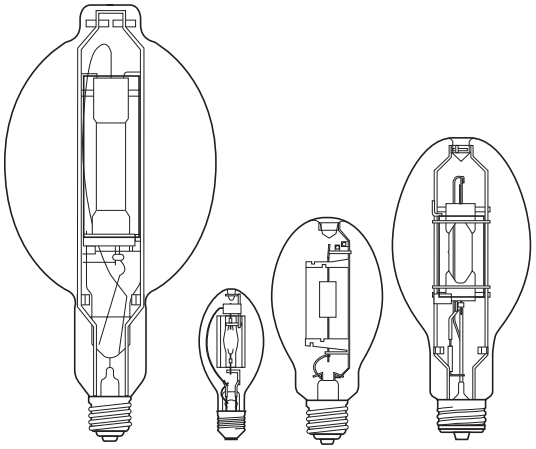

BT56 Mog | ED17 Med | ED28 EX39 | ED37 EX39

Protected Multi-Vapor® Metal Halide Lamps

Lamp Locator (continued)

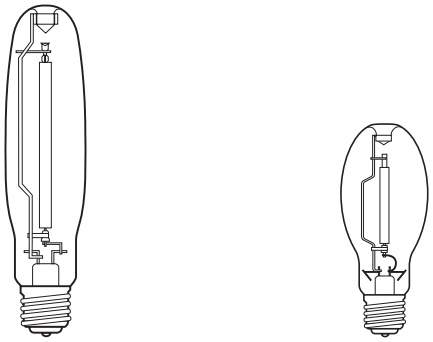

Ecolux® NC Non-Cycling High Pressure Sodium Lamps
(TCLP Compliant)

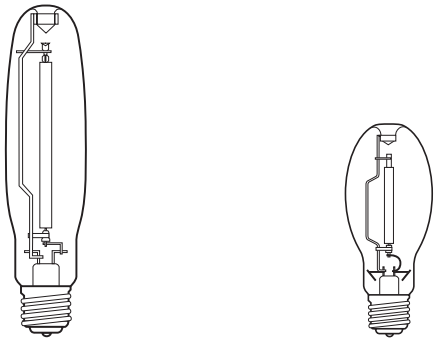

Ecolux® High Pressure Sodium Lamps
(TCLP Compliant)

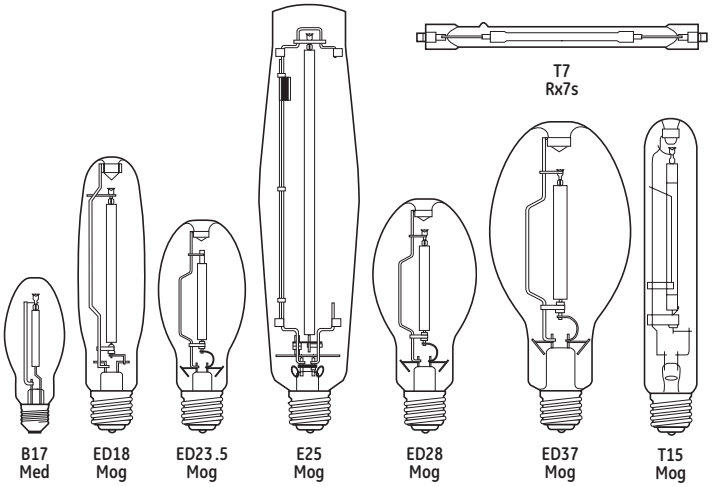

Lucalox® High Pressure Sodium Lamps

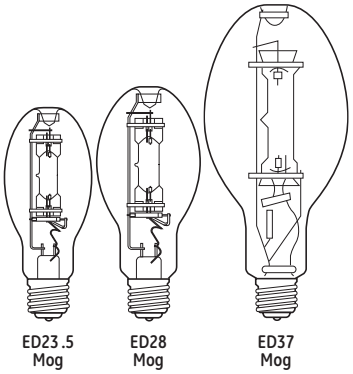

Mercury Lamps

Base Identification

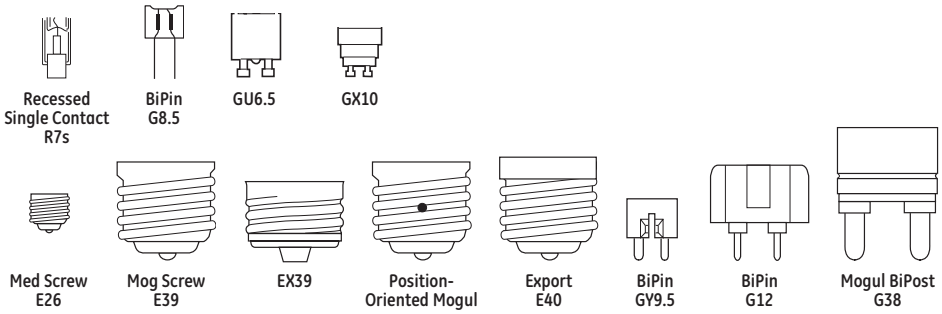

Introduction

GE HID lamps provide the following benefits:

High Efficacy/Low Operating Cost.
HID is generally the most efficient light source. Better efficiency almost always means lower operating cost.

Long Life.
Most HID lamps have life ratings that are better than incandescent lamps and similar to fluorescent lamps.

Compact Size.
An HID lamp produces high light output from a relatively compact source. Like incandescent, it is a "point" light source, which allows for good optical control.

The chart at right shows how HID lamps compare to incandescent, halogen, and fluorescent in terms of efficiency and rated life. Efficiency is measured in lumens per watt (LPW). Rated life for most lamp types is the number of burning hours when 50% of the tested samples have failed and 50% are still operational. For both HID and fluorescent, lamp life depends on the number of hours per start.

The combination of high efficiency and long life makes HID an ideal light source for many commercial and industrial applications.

Typical Lamp Characteristics

Lamp Type	Typical LPW	Rated Life (in hours)
Incandescent	5-22	750-2000
Halogen	12-36	2,000-6000
Compact Fluorescent	27-80	9,000-20,000
Fluorescent	75-100	5,000-36,000
Mercury	50-60	12,000-24,000+
ConstantColor® CMH®	80-95	10,000-20,000
Multi-Vapor® Metal Halide	80-115	10,000-20,000
Lucalox® High Pressure Sodium	90-140	10,000-40,000

Suggested Color Applications for HID Lamps

CMH®: Stores, people places, display, accent.

MVR: Stores, public spaces, industrial, gymnasiums, floodlighting signs and buildings, parking areas, sports.

MVR/C: Same as MVR – warmer color-diffuse coating reducing glare.

MXR: Warm color (3200K) – good match for halogen.

LU: Street lighting, parking areas, industrial, floodlighting, security, CCTV.

LU/DX: Floodlighting, parking areas, indoor/outdoor pedestrian malls, industrial, security, roadway.

Deluxe (DX) Mercury: Stores, public spaces – metal halide lamps however, are preferred.

Clear Mercury: Landscape lighting, specialized floodlighting such as green copper roofs.

Product Information

GE ConstantColor® CMH® and CMH® Ultra Ceramic Metal Halide Lamps (pgs 3-9 to 3-11)

- Color uniformity lamp-to-lamp and over lamp life
- Excellent color rendering (80+ CRI, 90+ CRI for SPXX versions)
- Delivers more light than standard metal halide (10%–20% more)
- Lamp operates at high efficacy—up to 95 lumens per watt
- Many are universal burn—may be operated in any position
- Perfect for retail and commercial display lighting, accent and floodlighting, lobby and foyer lighting. Ideal for "people places"

GE CMH® Chromafit™ Ceramic Metal Halide Lamps (pg 3-11)

- Convert High Pressure Sodium sockets to crisp, white ceramic metal halide light (80+ CRI)
- Operate on standard HPS ballasts and auxiliary equipment
- Universal burn—may be operated in any position
- Uses: Area lighting, industrial and "people places"
- Enclosed glass fixtures only

GE PulseArc® Medium Based Metal Halide Lamps (/MED models) (pg 3-12)

- Low wattage metal halide lamps (formerly Halarc®) are now part of the PulseArc® family
- Compact source
- Sparkling white light (3000-4000K) and very good color rendition (70-75 CRI)
- High efficacy—more than 3 times the lumens per watt of incandescent
- Long life—up to 15 times longer than incandescent systems and up to 7 times longer than most PAR and R systems, saving maintenance and labor costs
- Superior optical control
- Uses: Display lighting, downlighting, floodlighting, corridors, lobbies, walkways; retail, office, commercial

GE PulseArc® Multi-Vapor® Metal Halide Lamps (/PA Models) (pgs 3-12 to 3-13)

- Designed for operation only on approved ballasts with metal halide pulse ignitors
- More light—400W lamps provide highest initial and highest maintained lumens versus other standard universal or vertical base-up lamp options
- 50% longer life—400W lamps provide 30,000 hours life when burned on 120 hour on/1 hour off cycle (approximately continuous)
- Faster hot restrike—less than 4 minutes versus 10-15 minutes for typical metal halide lamps

GE Multi-Vapor® Metal Halide Lamps (pg 3-13)

- Sparkling white light (3000-4000K) and very good color rendition (65-75 CRI)
- Warm, rich 3000K color of SP30 blends well with incandescent, halogen and triphosphor fluorescent lamps for interior retail applications
- High efficacy—more efficient than incandescent, mercury and most fluorescent sources
- Long life—10,000-20,000 hours for most types
- Full line, 150-1000 watts, to meet most application needs
- Uses: Downlighting, floodlighting, corridors, lobbies, walkways; retail, commercial, industrial

GE High Output Multi-Vapor® Lamps (pgs 3-13 to 3-14)

- More light—optimized for higher light output in horizontal, vertical base-up and base-down burn applications
  - Horizontal burn lamps provide up to 25% more light than standard universal burn equivalents
  - 400W vertical burn lamps provide up to 22% more light than standard universal burn equivalents; the highest lumen lamps available for operation on standard M59 ballasts
- Longer life—horizontal burn lamps last up to 67% longer than universal burn lamp equivalents, significantly reducing replacement lamp and maintenance costs

GE Protected High Output Multi-Vapor® Lamps (/O) (pgs 3-14 to 3-15)

- Protective quartz jacket surrounds the arc tube
- The/O suffix and/or the "MPR" prefix in the Lamp Description indicates lamps are suitable for open fixture applications

GE ChromaFit™ Multi-Vapor® Lamps (/R) (pg 3-15)

- Convert high pressure sodium sockets to crisp white metal halide light (65-70 CRI)
- Operate on standard HPS ballasts and auxiliary equipment
- Uses: Area lighting, industrial and "people places"

GE Lucalox® High Pressure Sodium Lamps (pg 3-15)

- Very high efficacy/low operating cost
- Excellent lumen maintenance—over 90% @ 50% of life
- Very long life—24,000+ hours
- Universal burn—can be operated in any position without affecting performance
- Warm color
- For open or enclosed fixtures
- Uses: Industrial, roadway, security, floodlighting

GE Ecolux® High Pressure Sodium Lamps (/ECO) (pgs 3-15 to 3-16)

- Lead-free base. Passes TCLP, which can lower disposal costs.

GE Standby Longlife Lucalox® and Ecolux® Lamps (/SBY) (pgs 3-16 to 3-17)

- Extra arc tube provides light instantly after momentary power interruption, and will increase to 80% light output in 1-2 minutes
- Dual arc tubes provide 40,000 hour rated life
- Operates on standard HPS ballasts and auxiliary equipment
- Uses: Industrial, roadway, security, and hard-to-reach sockets
- Ecolux® lamps use lead-free bases. Passes TCLP, which can lower disposal costs.

Product Information (continued)

GE Ecolux® NC "Non-Cycling" High Pressure Sodium Lamps (/ECO/NC) (pg 3-17)

- Low mercury. Passes TCLP, which can lower disposal costs.
- Non-cycling feature makes locating and replacing end-of-life lamps quick and easy
- Lead-free base
- High efficacy/low operating cost
- 6%-11% higher initial lumens than standard HPS in 100W and 400W versions
- Long life—up to 40,000 hours
- Open or enclosed fixtures
- Uses: Industrial, roadway, security

GE Mercury Lamps (pg 3-17)

- Long life and good efficacy
- Phosphor coated Deluxe lamps provide good color rendering (50CRI)
- Uses: Industrial, roadway, landscapes, residential and commercial security, parking lots

HID Brand Name Cross-Reference

GE	OSRAM/SYLVANIA	PHILIPS
ChromaFit™ Multi-Vapor®	—	—
ConstantColor® CMH®	Powerball® MCP	MasterColor® CDM
Deluxe Lucalox®	—	Ceramalux™ Comfort
E-Z Lux®	Unalux®	Ceramalux™ Retrolux
Ecolux®	Lumalux ECO®	Ceramalux Alto®
Ecolux® NC	Lumalux Plus™/ECO®	Ceramalux Alto® Plus
High Output Multi-Vapor®	Super Metalarc®	Metal Halide
Horizontal Multi-Vapor®	Super Metalarc®	—
Lucalox®	Lumalux®	Ceramalux™
Multi-Vapor®	Metalarc®	Metal Halide
Protected High Output Multi-Vapor®	Metalarc® Pro-Tech™	—
PulseArc®	Super Metalarc® Pulse Start	Pulse Start

GE	OSRAM/SYLVANIA	PHILIPS
Standby Longlife Lucalox®	Lumalux® Standby	Instant Restrike Ceramalux™
Watt-Miser® Multi-Vapor®	Metalarc® Supersaver®	—

ATTENTION: This brand-name cross-reference chart is provided only as a quick reference. Other lamp company brand listings may only represent a near equivalent, versus an identical match to GE Lighting brands. Individual lamp manufacturers' performance specifications should be consulted. Lamp performance may be affected by environmental conditions, ballast type and/or other auxiliary equipment.

Headings in this catalog section

The following terms and descriptions can help you when checking High Intensity Discharge lamp specifications and when ordering products. Within each product line, lamps are divided into families. Within families, lamps are listed by wattage. In each of these wattage groups, lamps are listed by bulb shape.

Bulb Shape: Bulb shape followed by its size (the maximum diameter of the bulb expressed in eighths of an inch).

Base: The type of base.

LET (Lamp Enclosure Type): Describes fixture requirements for this lamp.

OP (Operating Position)

Energy Used – Nominal Watts: Energy Used (as defined by FTC Lamp Label Rules). To estimate energy consumption (kWh), multiply watts x hours of use and divide by 1000.

MOL (in): Maximum Overall Length in inches.

LCL (in): Distance between the center of the filament and the Light Center Length reference plane, in inches.

Order Code: It is important to use this five-digit code when ordering to ensure that you receive the exact product you require.

Description: The lamp's identification code.

ANSI Ballast Type: Ballast type used to operate lamp.

Case Qty: Number of product units packed in a case.

CBCP (Center Beam Candlepower): For reflector-type lamps. Center Beam Candlepower is the intensity (candelas) at the center or maximum intensity of the beam. Used only for ConstantColor® CMH® Metal Halide Lamps.

Rated Life (hours): Lamp burning hours to median life expectancy.

Initial Lumens: Initial light output.

Mean Lumens: Lamp light output (lumens) at 40% of rated lamp life for Metal Halide lamps and 50% of rated life for Mercury and HPS lamps.

Color Temperature Kelvins (K): A measure of the visual "warmth" or "coolness" of the light from the lamp. The higher the value the whiter or "cooler" the light appears.

Color Rendering Index (CRI): An indication of the ability of the lamp to render object colors in a normal, natural way. The higher the number (0-100), the better the color appearance.

Additional Information: Typical application and/or other important information.

Footnotes: See page 3-19.

Warning and Caution Notices: See page 3-21.

Bulb Shape	Base	LET	OP	Watts	MOL (in)	LCL (in)	Order Code	Description	ANSI Ballast Type	Case Qty	CBCP	Rated Life (hrs)	Initial Lumens	Mean Lumens	Color Temp K	CRI	Additional Information	Footnotes	Warning and Caution Notices
Constant Color CMH® Metal Halide Lamps																			
CMH® MR16																			
MR16	GX10	O	U	20	2.28		85101	CMH20MR16/830/SP	M156	12	9000	12000	1000		3000	81	12 Spotlight, UV control	33,39,51	107

CMH20MR16 / 830 / SP

- CMH20 — Identifies as CMH® lamp.
- MR16 — Identifies the lamp's wattage.
- 830 — Identifies the bulb shape.
- 830 — Color temp. and CRI.
- SP — Additional information.

WHEN YOU DON'T KNOW THE LAMP DESCRIPTION

1. Identify bulb shape by using illustrations on pages 3-2 to 3-4.
2. Measure bulb diameter using ruler in Appendix section page D-1 to determine width in eighths of an inch.
3. Identify base type using table on page 3-5.
4. Find your lamp in the tabular data containing the bulb shape, size and base, which are all listed by wattage.

Constant Color CMH® Metal Halide Lamps

Bulb Shape	Base	LET	OP	Watts	MOL (in)	LCL (in)	Order Code	Description	ANSI Ballast Type	Case Qty	CBCP	Rated Life (hrs)	Initial Lumens	Mean Lumens	Color Temp K	CRI	Additional Information	Reduced Watts/ High Color Rendering	Footnotes	Warning and Caution Notices
CMH® MR16 ULTRA																				
MR16	GX10	O	U	39	2.28		62292	CMH39MR16UL93/SP	C130/ M130	12	16000	16500	2200		3000	90	12 Spotlight, UV Control, Vertical +/-60 degrees; Electronic Ballast		33,39,51	107
		O	U	39	2.28		62293	CMH39MR16UL93/FL	C130/ M130	12	5500	16500	2200		3000	90	25 Spotlight, UV Control, Vertical +/-60 degrees; Electronic Ballast		33,39,51	107
		O	U	39	2.28		62294	CMH39MR16UL93WFL	C130/ M130	12	3000	16500	2200		3000	90	40 Spotlight, UV Control, Vertical +/-60 degrees; Electronic Ballast		33,39,51	107
CMH® MR16																				
MR16	GX10	O	U	20	2.28		85101	CMH20MR16/830/SP	C156/ M156	12	9000	12000	1000		3000	81	12 Spotlight, UV Control		33,39,51	107
		O	U	20	2.28		85110	CMH20MR16/830/FL	C156/ M156	12	2900	12000	1000		3000	81	25 Floodlight, UV Control		33,39,51	107
		O	U	20	2.28		97638	CMH20MR16/830WFL	C156/ M156	12	1500	12000	1000		3000	81	40 Wideflood, UV Control		33,39,51	107
		O	U	39	2.28		71488	CMH39MR16/930/SP	C130/ M130	12	16000	10000	2200		3000	90	12 Spotlight, UV Control		33,39,51	107
		O	U	39	2.28		71489	CMH39MR16/930/FL	C130/ M130	12	5500	10000	2200		3000	90	25 Floodlight, UV Control		33,39,51	107
		O	U	39	2.28		71490	CMH39MR16/930WFL	C130/ M130	12	3000	10000	2200		3000	90	40 Wideflood, UV Control		33,39,51	107
		O	U	39	2.28		71491	CMH39MR16/942/SP	C130/ M130	12	16000	12000	2200		4000	92	12 Spotlight, UV Control		33,39,51	107
		O	U	39	2.28		71492	CMH39MR16/942/FL	C130/ M130	12	5500	12000	2200		4000	92	25 Floodlight, UV Control		33,39,51	107
		O	U	39	2.28		71493	CMH39MR16/942WFL	C130/ M130	12	3000	12000	2200		4000	92	40 Wideflood, UV Control		33,39,51	107
CMH® PAR Integral Ballast																				
PAR38	E26	O	U	23	5.35		76224	CMHi23P38SP/ECO		6	28000	12000	1400		3000	81	10 Spotlight, UV Control		33,39	100
		O	U	23	5.35		76225	CMHi23P38FL/ECO		6	6000	12000	1400		3000	81	25 Floodlight, UV Control		33,39	100
		O	U	23	5.35		76226	CMHi23P38WFL/ECO		6	2800	12000	1400		3000	81	36 Wideflood, UV Control		33,39	100
CMH® PAR																				
PAR20	E26	O	U	20	3.60		29485	CMH20PAR20/SP	C156/ M156	15	13000	12000	1000		3000	81	8 Spotlight, UV Control		33,39,51	107
		O	U	20	3.60		29486	CMH20PAR20/FL	C156/ M156	15	3750	12000	1000		3000	81	25 Floodlight, UV Control		33,39,51	107
PAR30L	E26	O	U	20	4.75		29487	CMH20PAR30/SP10	C156/ M156	6	19800	12000	1200		3000	81	10 Spotlight, UV Control		33,39,51	107
		O	U	20	4.75		29488	CMH20PAR30/SP15	C156/ M156	6	14500	12000	1200		3000	81	15 Spotlight, UV Control		33,39,51	107
		O	U	20	4.75		29489	CMH20PAR30/FL25	C156/ M156	6	4900	12000	1200		3000	81	25 Floodlight, UV Control		33,39,51	107
PAR20	E26	O	U	39	3.60		42068	CMH39UPAR20FL25	C130/ M130	15	7500	10000	2100		3000	86	25 Floodlight, UV Control		33,39,45	107
		O	U	39	3.60		42069	CMH39UPAR20SP10	C130/ M130	15	22000	10000	2100		3000	86	10 Spotlight, UV Control		33,39,45	107
		O	U	39	3.60		96526	CMH39PAR20/NSP4K	C130/ M130	15	19450	10000	1950		4200	90	10 Spotlight, UV Control		33,39,45	107
		O	U	39	3.60		96527	CMH39PAR20/FL4K	C130/ M130	15	6950	10000	1950		4200	90	25 Floodlight, UV Control		33,39,45	107
PAR30L	E26	O	U	39	4.75		42066	CMH39PAR30L/SP15	C130/ M130	6	29000	10000	2400		3000	81	15 Spotlight, UV Control		33,39,45	107
		O	U	39	4.75		42067	CMH39PAR30L/FL25	C130/ M130	6	11000	10000	2400		3000	81	25 Floodlight, UV Control		33,39,45	107
		O	U	39	4.75		45066	CMH39/PAR30LSP10	C130/ M130	6	39600	10000	2400		3000	81	10 Spotlight, UV Control		33,39,45	107
		O	U	39	4.75		96528	CMH39PAR30LNSP4K	C130/ M130	6	36700	10000	2225		4200	89	10 Spotlight, UV Control		33,39,45	107
		O	U	39	4.75		96529	CMH39PAR30L/SP4K	C130/ M130	6	26900	10000	2225		4200	89	15 Spotlight, UV Control		33,39,45	107
		O	U	39	4.75		96530	CMH39PAR30L/FL4K	C130/ M130	6	10200	10000	2225		4200	89	25 Floodlight, UV Control		33,39,45	107
		O	U	70	4.75		22152	CMH70PAR30L830SP	C139/ M98	6	43000	13000	4700		3000	82	15 Spotlight, UV Control		33,39,45	107
		O	U	70	4.75		22159	CMH70PAR30L830FL	C139/ M98	6	10000	13000	4700		3000	82	40 Floodlight, UV Control		33,39,45	107

For the most up-to-date product information, see www.gelighting.com. To convert inches to millimeters, multiply by 25.4.
All footnotes, warning and caution notices found at the end of this section (page 3-19).

Bulb Shape	Base	LET	OP	Watts	MOL (in)	LCL (in)	Order Code	Description	ANSI Ballast Type	Case Qty	CBCP	Rated Life (hrs)	Initial Lumens	Mean Lumens	Color Temp K	CRI	Additional Information	Reduced Watts/ High Color Rendering	Footnotes	Warning and Caution Notices
Constant Color CMH® Metal Halide Lamps (continued)																				
CMH® PAR (continued)																				
PAR38	E26	O	U	70	5.31		45675	CMH70PAR38SP/ECO	C98/ M139/ M143/	6	40000	10000	4800		3000	82	15 Spotlight, UV Control		33,39	108
		O	U	70	5.31		45677	CMH70PAR38FL/ECO	C98/ M139/ M143/	6	14000	10000	4800		3000	82	25 Floodlight, UV Control		33,39	108
		O	U	70	5.31		45679	CMH70PAR38WF/ECO	C98/ M139/ M143/	6	4400	10000	4800		3000	82	60 Wide Floodlight, UV Control		33,39	108
		O	U	100	5.31		45680	CMH100PAR38SPECO	C90/ M90/ M140	6	45000	10000	6500		3000	81	15 Spotlight, UV Control		33,39	108
		O	U	100	5.31		45681	CMH100PAR38FLECO	C90/ M90/ M140	6	15000	10000	6500		3000	81	25 Floodlight, UV Control		33,39	108
		O	U	100	5.31		45682	CMH100PAR38WFECO	C90/ M90/ M140	6	5500	10000	6500		3000	81	60 Wide Floodlight, UV Control		33,39	108
CMH® Elliptical																				
BD17	E26	E	U	70	5.43	3.37	22119	CMH70/U/830/MED	M139/ M98/ C98	6		15000	6300	4100	3000	80	Clear		33	116
		E	U	70	5.43	3.37	22124	CMH70/C/U/830MED	M139/ M98/ C98	6		15000	6000	4000	3000	80	Coated		33	116
		E	U	100	5.43	3.37	22127	CMH100/U/830/MED	C90/ M90/ M140	6		10000 V 15000 H	9200	6600 V 6400 H	3000	83	Clear		33	116
		E	U	100	5.43	3.37	22137	CMH100/C/U830MED	C90/ M90/ M140	6		10000 V 15000 H	8700	6300	3000	83	Coated		33	116
CMH® Elliptical Open-Rated																				
ED17	E26	O	U	70	5.43	3.37	31069	CMH70U830MED/O	M143/ M98/ C98	6		15000	5700	4100	3000	80	Clear		33	106
		O	U	70	5.43	3.37	31070	CMH70CU830MED/O	M143/ M98/ C98	6		15000	5700	4100	3000	80	Coated		33	106
		O	U	70	5.43	3.37	31073	CMH70U942MED/O	M143/ M98/ C98	6		15000	5500	4200	4000	90	Clear		33	106
		O	U	70	5.43	3.37	31074	CMH70CU942MED/O	M143/ M98/ C98	6		15000	5200	4000	4000	90	Coated		33	106
	E26	O	U	150	5.43	3.37	31065	CMH150U830MED/O	C102/ M102/ M142	6		12000	12900	9500	3000	80	Clear		33	106
		O	U	150	5.43	3.37	31066	CMH150CU830MED/O	C102/ M102/ M142	6		12000	11900	8800	3000	80	Coated		33	106
		O	U	150	5.43	3.37	31067	CMH150U942MED/O	C102/ M102/ M142	6		15000	12000	9000	4200	90	Clear		33	106
		O	U	150	5.43	3.37	31068	CMH150CU942MED/O	C102/ M102/ M142	6		15000	11000	8300	4200	90	Coated		33	106
CMH® Single-Ended G12 ULTRA																				
T6	G12	E	U	39	3.56	2.18	79399	CMH39/930G12ULR	C130/ M130	12		16500	3600	3060	3000	87	UV Control, Vertical +/-60 degrees; Electronic Ballast		33,39,51	104
		E	U	70	3.56	2.18	73056	CMH70U930G12ULR	C139/ M139	12		18000	6400	5300	3000	87	UV Control		33,39,45	104

For the most up-to-date product information, see www.gelighting.com. To convert inches to millimeters, multiply by 25.4.
All footnotes, warning and caution notices found at the end of this section (page 3-19).

Bulb Shape	Base	LET	OP	Watts	MOL (in)	LCL (in)	Order Code	Description	ANSI Ballast Type	Case Qty	CBCP	Rated Life (hrs)	Initial Lumens	Mean Lumens	Color Temp K	CRI	Additional Information	Reduced Watts/ High Color Rendering	Footnotes	Warning and Caution Notices
Constant Color CMH® Metal Halide Lamps (continued)																				
CMH® Single-Ended G12																				
T4.5	G12	E	U	20	3.56	2.18	29703	CMH20T/U/830/G12	C156/ M156	12		12000	1600	1200	3000	81	UV Control		33,39,51	104
		E	U	39	3.56	2.18	20153	CMH39TUVCU830G12	C130/ M130	12		16500	3400	2300	3000	84	UV Control		33,39,45, 53	104
		E	U	39	3.56	2.18	29696	CMH39T/U/942/G12	C130/ M130	12		18000	3200	2600	4200	88	UV Control		33,39,45, 53	104
T6	G12	E	U	70	3.56	2.18	20016	CMH70TU/830/G12	C139/ M139	12		15000	6200	4700	3000	83	UV Control		33,39,45	104
		E	U	70	3.56	2.18	20023	CMH70TU/942/G12	C139/ M139	12		15000	6300	4700	4200	91	UV Control		33,39,45	104
		E	U	150	3.93	2.18	20017	CMH150TU/830/G12	C142/ M102	12		12000	14000	11000	3000	82	UV Control		33,39,45	104
		E	U	150	3.93	2.18	20018	CMH150TU/942/G12	C142/ M102	12		12000	13000	11000	4200	94	UV Control		33,39,45	104
CMH® Double-Ended TD																				
T6	Rx7s	E	H45	70	4.50	2.25	92587	CMH70/TD/830RX7S	M85/ M139	12		15000	7000	5600	3000	81	UV Control		33,39	109
		E	H45	70	4.50	2.25	92588	CMH70/TD/942RX7S	M85/ M139	12		15000	7000	5600	4200	88	UV Control		33,39	109
T7	Rx7s	E	H45	150	5.37	2.62	92589	CMH150TD830RX7S	M81/ M142	12		15000	14000	11500	3000	80	UV Control		33,39	109
		E	H45	150	5.37	2.62	92590	CMH150TD942RX7S	M81/ M142	12		15000	14000	11500	4200	93	UV Control		33,39	109
CMH® GU6.5 ULTRA																				
T4	GU6.5	E	U	39	2.05	1.18	62291	CMH39ULR930GU6.5	C130/ M130	12		16500	3500	2835	3000	87	UV Control, Vertical +/-60 degrees; Electronic Ballast		33,39,51	104
CMH® GU6.5																				
T4	GU6.5	E	U	20	2.05	1.18	85086	CMH20T/U830GU6.5	C156/ M156	12		12000	1615	1066	3000	81	UV Control		33,39,51	104
		E	U	39	2.05	1.18	71484	CMH39T/U930GU6.5	C130/ M130	12		10000	3400	2300	3000	88	UV Control		33,39,51	104
		E	U	39	2.05	1.18	71487	CMH39T/U942GU6.5	C130/ M130	12		12000	3400	2600	4000	90	UV Control		33,39,51	104
CMH® Mini ULTRA																				
T4.5	G8.5	E	U	39	3.37	2	79400	CMH39/930G8.5ULR	C130/ M130	12		16500	3600	3060	3000	87	UV Control, Vertical +/-60 degrees; Electronic Ballast		33,39,51	104
		E	U	70	3.37	2.00	73057	CMH70U930G8.5ULR	C139/ M139	12		18000	6200	5140	3000	88	UV Control		33,39,45	104
CMH® Mini's																				
T4.5	G8.5	E	U	20	3.37	2.00	92696	CMH20TCU830/G8.5	C156/ M156	12		12000	1650	1090	3000	81	UV Control		33,39,51	104
		E	U	39	3.37	2.00	90352	CMH39TCU830/G8.5	C130/ M130	12		16500	3400	2300	3000	84	UV Control		33,39,45, 53	104
		E	U	39	3.37	2.00	29698	CMH39TCU942/G8.5	C130/ M130	12		18000	3200	2600	4200	88	UV Control		33,39,45, 53	104
		E	U	70	3.37	2.00	92585	CMH70TCU830G8.5	C139/ M139	12		15000	6200	4400	3000	83	UV Control		33,39,45	104
		E	U	70	3.37	2.00	29701	CMH70TCU942/G8.5	C139/ M139	12		15000	6200	4600	4200	90	UV Control		33,39,45	104
CMH® Chromafit™																				
T15	E39	E	U	250	9.75	5.75	93357	CMH250/U/830/R	S50/ M168	12		24000	25000	20000	3000	85			33	105
ED18	E39	E	U	400	9.75	5.75	93295	CMH400/U/830/R	S51/ M169	12		20000	41000	31300	3000H 3600V	82H 80V			33,45,49	105
High-Watt CMH® SPXX																				
ED28	EX39	O	V	250	8.31	5.00	48429	CMH250/V/PA/O		12		20000	23000	18400	4100	90	Clear		33,45,52	106
		O	V	250	8.31	5.00	48432	CMH250C/V/PA/O		12		20000	22000	17600	4100	90	Coated		33,45,52	106
ED37	EX39	O	V	320	11.31	7.00	17264	CMH320/V/PA/O		6		20000	31000	24800	4100	90	Clear		33,45,52	106
		O	V	320	11.31	7.00	17267	CMH320C/V/PA/O		6		20000	30000	24000	4100	90	Coated		33,45,52	106
		O	V	350	11.31	7.00	20035	CMH350/V/PA/O		6		20000	33000	26400	4000	90	Clear		33,45,52	106
		O	V	350	11.31	7.00	20036	CMH350C/V/PA/O		6		20000	32000	25600	4000	90	Coated		33,45,52	106
		O	V	400	11.31	7	17259	CMH400/V/PA/O		6		20000	37000	29600	4200	90	Clear		33,45,52	106
		O	V	400	11.31	7	17260	CMH400/C/V/PA/O		6		20000	36000	28800	4200	90	Coated		33,45,52	106

High Intensity Discharge Lamps

Bulb Shape	Base	LET	OP	Watts	MOL (in)	LCL (in)	Order Code	Description	ANSI Ballast Type	Case Qty	CBCP	Rated Life (hrs)	Initial Lumens	Mean Lumens	Color Temp K	CRI	Additional Information	Reduced Watts/ High Color Rendering	Footnotes	Warning and Caution Notices
PulseArc® Multi-Vapor® Metal Halide Lamps																				
50 Watts																				
BD17	E26	E	U	50	5.43	3.43	10361	MXR50/U/MED	M110	6		10000	3200	2100	3700	60	Clear			118
		E	U	50	5.43	3.43	10364	MXR50/C/U/MED	M110	6		10000	3000	2000	3400	65	Coated			118
70 Watts																				
BD17	E26	E	U	70	5.43	3.43	22158	MXR70/U/MED	M98	6		12000	5500	3500	3500	55	Clear			118
		E	U	70	5.43	3.43	22162	MXR70/C/U/MED	M98	6		12000	5300	3300	3200	55	Coated			118
		E	U	70	5.43	3.43	12590	MVR70/U/MED	M98	6		12000	5500	3000	4000	65	Clear			118
		E	U	70	5.43	3.43	12594	MVR70/C/U/MED	M98	6		12000	5250	2800	4000	65	Coated			118
100 Watts																				
BD17	E26	E	U	100	5.43	3.43	18680	MXR100/U/MED	M90	6		15000	9000	6200	3200	65	Clear			118
		E	U	100	5.43	3.43	18679	MXR100/C/U/MED	M90	6		15000	8500	5900	3200	65	Coated			118
		E	U	100	5.43	3.43	12652	MVR100/U/MED	M90	6		15000	9500	5800	4000	70	Clear			118
		E	U	100	5.43	3.43	12653	MVR100/C/U/MED	M90	6		15000	8800	4900	4000	70	Coated			118
150 Watts																				
BD17	E26	E	U	150	5.43	3.43	22935	MXR150/U/MED	M102	6		15000	13300	10000	3400	60	Clear			118
		E	U	150	5.43	3.43	22936	MXR150/C/U/MED	M102	6		15000	12600	9500	3100	60	Coated			118
		E	U	150	5.43	3.43	12598	MVR150/U/MED	M102	6		15000	14000	10500	4300	65	Clear			118
		E	U	150	5.43	3.43	12604	MVR150/C/U/MED	M102	6		15000	13300	10000	3900	70	Coated			118
175 Watts																				
ED23.5	E39	E	VBU	175	7.50	5.00	11185	MXR175/C/VBU/PA	M137/ M152	6		15000	16000	12000	3200	65	Coated		43	117
		E	VBU	175	7.50	5.00	12622	MVR175/VBU/PA	M137/ M152	6		15000	17500	13000	4000	70	Clear		43	117
		E	VBU	175	7.50	5.00	12633	MVR175/C/VBU/PA	M137/ M152	6		15000	16500	12500	4000	70	Coated		43	117
BD17	E26	E	VBU	175	5.75	3.43	12636	MVR175/VBU/MEDPA	M137/ M152	6		15000	17500	13000	4000	70	Clear		43	117
		E	VBU	175	5.75	3.43	12637	MVR175/CVBUMEDPA	M137/ M152	6		15000	16500	12500	4000	70	Coated		43	117
250 Watts																				
ED28	E39	E	U	250	8.25	5.00	78665	MVR250/U/PA	M138/ M153	12		12000H/ 15000V	18600H/ 22400V	12000H/ 14000V	3900	60	Clear		43	116
		E	VBU	250	8.25	5.00	26317	MVR250/VBU/PA	M138/ M153	12		15000	23000	17000	4200	55	Clear		43	116
		E	VBU	250	8.25	5.00	26319	MVR250/C/VBU/PA	M138/ M153	12		15000	21500	15500	3900	55	Coated		43	116
		E	HOR	250	8.25	5.00	72882	MVR250/HOR/PA	M138/ M153	12		12000	20000	13700	4400	60	Clear		43	117
320 Watts																				
ED28	E39	E	VBU	320	8.25	5.00	27501	MVR320/VBU/HO/PA	M132/ M154	12		20000	31000	18000	4000	60	Clear		43	117
		E	VBU	320	8.25	5.00	27502	MVR320/C/VBUHOPA	M132/ M154	12		20000	30000	16500	3700	60	Coated		43	117
		E	VBU	320	8.25	5.00	45666	MVR320VBU/XHO/PA	M132/ M154	12		20000	34000	25000	4000	65	Extra High Output		43	116
		E	VBU	320	8.25	5.00	45669	MVR320/C/VBU/ XHO/PA	M132/ M154	12		20000	33000	23000	3700	70	Extra High Output		43	116
		E	HOR	320	8.25	5.00	72884	MVR320/HOR/PA	M132/ M154	12		20000	30000	19100	4100	65	Clear		43	117
350 Watts																				
ED37	E39	E	VBU	350	11.50	7.00	23729	MVR350VBUXHOPA/E	M131	6		20000	36500	27000	4000	60	Extra High Output		43	117
		E	VBU	350	11.50	7.00	23738	MVR350CVBUXHOPAE	M131	6		20000	34500	25000	3700	60	Extra High Output		43	117
400 Watts																				
ED37	E39	E	U	400	11.50	7.00	78666	MVR400/U/PA	M135/ M155	6		15000H/ 20000V	31200H/ 39400V	18000H/ 22000V	4000	60	Clear		43	116
		S	VBU	400	11.50	7.00	45664	MVR400/VBU/HO/PA	M135/ M155	6		20000	41000	31000	4000	60	Clear		49	121
		S	VBU	400	11.50	7.00	12642	MVR400/VBU/XHOPA	M135/ M155	6		20000	44000	33000	4000	55	Extra High Output		49	121
		S	VBU	400	11.50	7.00	12644	MVR400/CVBUXHOPA	M135/ M155	6		20000	42000	31500	3700	55	Coated, Extra High Output		49	121
		E	HOR	400	11.50	7.00	72886	MVR400/HOR/PA	M135/ M155	6		20000	40000	22300	4100	65	Clear		43,49	117
		E	VBD	400	11.50	7.00	46632	MVR400VBD/XHO/PA	M135/ M155	6		20000	44000	35200	4000	65	Extra High Output		43,49	116

For the most up-to-date product information, see www.gelighting.com. To convert inches to millimeters, multiply by 25.4.
All footnotes, warning and caution notices found at the end of this section (page 3-19).

Bulb Shape	Base	LET	OP	Watts	MOL (in)	LCL (in)	Order Code	Description	ANSI Ballast Type	Case Qty	CBCP	Rated Life (hrs)	Initial Lumens	Mean Lumens	Color Temp K	CRI	Additional Information	Reduced Watts/ High Color Rendering	Footnotes	Warning and Caution Notices
PulseArc® Multi-Vapor® Metal Halide Lamps (continued)																				
ED28	E39	E	VBU	400	8.25	5.00	46271	MVR400/VBUED28PA	M135/ M155	12		20000	44000	28500	4000	65	Clear		43,49	116
		E	VBU	400	8.25	5.00	46272	MVR400CVBUED28PA	M135/ M155	12		20000	42000	27500	3700	70	Coated Compact		43,49	116
		E	HOR	400	8.25	5.00	72885	MVR400/HOR/ED28/PA	M135/ M155	12		20000	38000	21400	4100	65	Clear Compact		43,49	117
750 Watts																				
BT37	E39	E	VBU	750	11.50	7.00	27219	MVR750/VBU/PA	M149	6		16000	82000	60000	4000	65	Clear		49	117
		E	VBU	750	11.50	7.00	45560	MVR750/C/VBU/PA	M149	6		16000	72000	54000	3700	70	Coated		49	117
1000 Watts																				
BT37	E39	E	U	1000	11.50	7.00	10389	MVR1000U/BT37/PA	M141	6		9000H/ 12000V	105000H/ 115000V	82000H/ 90000V	3900	65	Clear		43,49	116
Multi-Vapor® Metal Halide Lamps																				
150 Watts																				
ED28	E39	E	U	150	8.25	5.00	13481	MVR150/U/WM	M57/ M107	12		7500H/ 10000V	11500H/ 13500V	7200H/ 8500V	4000	65	Clear, Watt-Miser®	✓		117
		E	U	150	8.25	5.00	13490	MVR150/C/U/WM	M57/ M107	12		7500H/ 10000V	10900H/ 12800V	6900H/ 8000V	3700	70	Coated, Watt-Miser®	✓		117
175 Watts																				
BD17	E26	E	U	175	5.75	3.43	18902	MVR175/U/MED	M57	6		6000H/ 10000V	11700H/ 14000V	7400H/ 8800V	4000	60	Clear			117
		E	U	175	5.75	3.43	26432	MVR175/U/MED/CP	M57	4		6000H/ 10000V	11700H/ 13600V	7400H/ 8800V	4000	65	Clear, Consumer Pack			117
		E	U	175	5.75	3.43	19976	MVR175/C/U/MED	M57	6		6000H/ 10000V	11900H/ 12900V	7900H/ 8400V	3900	60	Coated			117
ED28	E39	E	U	175	8.25	5.00	47760	MVR175/U	M57	12		6000H/ 10000V	11700H/ 13600V	7900H/ 8800V	4000	55	Clear			117
		E	U	175	8.25	5.00	26433	MVR175/U/CP	M57	4		6000H/ 10000V	11700H/ 13600V	7900H/ 8800V	4000	65	Clear, Consumer Pack			117
		E	U	175	8.25	5.00	47761	MVR175/C/U	M57	12		6000H/ 10000V	11900H/ 12900V	7900H/ 8400V	3900	55	Coated			117
		E	U	175	8.25	5.00	17634	MVR175/SP30/U	M57	12		6000H/ 10000V	10300H/ 12000V	6500H/ 7600V	3000	70	RE730 Phosphor Coating			117
PAR38	E26	E	U	175	5.62		25218	MVR175/PAR38/FL1	M57	6	6500	7500	12000		3800	65	Clear, One-Piece PAR			117
250 Watts																				
ED28	E39	E	U	250	8.25	5.00	42729	MVR250/U	M58	12		6000H/ 10000V	19100H/ 20800V	12400H/ 13500V	4200	60	Clear			117
		E	U	250	8.25	5.00	26434	MVR250/U/CP	M58	4		6000H/ 10000V	19100H/ 20800V	12400H/ 13500V	4200	65	Clear, Consumer Pack			117
		E	U	250	8.25	5.00	42731	MVR250/C/U	M58	12		6000H/ 10000V	18200H/ 19800V	11600H/ 13000V	3900	60	Coated			117
		E	U	250	8.25	5.00	17633	MVR250/SP30/U	M58	12		6000H/ 10000V	16600H/ 18000V	10600H/ 11500V	3000	70	RE730 Phosphor Coating			117
360 Watts																				
ED37	E39	S	U	360	11.50	7.00	13495	MVR360/U/WM/HO	M59/ M165	6		20000	36000	20000	4300	60	Clear, Watt-Miser®	✓	32,49	121
400 Watts																				
ED37	E39	S	U	400	11.50	7.00	43828	MVR400/U	M59	6		15000H/ 20000V	33100H/ 38000V	22100H/ 23500V	4000	60	Clear		49	121
		S	U	400	11.50	7.00	26435	MVR400/U/CP	M59	4		15000H/ 20000V	33100H/ 36000V	22100H/ 23500V	4000	65	Clear, Consumer Pack		49	121
		S	U	400	11.50	7.00	43829	MVR400/C/U	M59	6		15000H/ 20000V	32200H/ 36000V	19300H/ 23000V	3700	60	Coated		49	121
		S	U	400	11.50	7.00	17632	MVR400/SP30/U	M59	6		15000H/ 20000V	28500H/ 31000V	17100H/ 18600V	3000	70	RE730 Phosphor Coating		49	121
ED28	E39	E	U	400	8.25	5.00	18904	MVR400/U/ED28	M59	12		15000H/ 20000V	33100H/ 38000V	22100H/ 23500V	4000	60	Clear, Compact		49	117
		E	U	400	8.25	5.00	19979	MVR400/C/U/ED28	M59	12		15000H/ 20000V	32200H/ 36000V	19300H/ 23000V	4000	60	Coated, Compact		49	117
1000 Watts																				
BT56	E39	S	U	1000	15.37	9.50	41826	MVR1000/U	M47	6		11000H/ 15000V	100280H/ 108000V	79000H/ 86000V	4000	65	Clear		49	121
		S	U	1000	15.37	9.50	41827	MVR1000/C/U	M47	6		11000H/ 15000V	96600H/ 105000V	73000H/ 80000V	3700	65	Coated		49	121
BT37	E39	E	U	1000	11.50	7.00	18205	MVR1000/U/BT37	M47	6		9000H/ 12000V	105000H/ 115000V	82000H/ 90000V	3700	65	Clear, Compact		49	121
High Output and XHO Multi-Vapor® Metal Halide Lamps																				
175 Watts																				
ED28	PosMog	E	HOR	175	8.25	5.00	18105	MVR175/C/HOR	M57	12		10000	14100	7500	3500	70	Coated, Position Oriented Socket			117

For the most up-to-date product information, see www.gelighting.com. To convert inches to millimeters, multiply by 25.4.
All footnotes, warning and caution notices found at the end of this section (page 3-19).

Bulb Shape	Base	LET	OP	Watts	MOL (in)	LCL (in)	Order Code	Description	ANSI Ballast Type	Case Qty	CBCP	Rated Life (hrs)	Initial Lumens	Mean Lumens	Color Temp K	CRI	Additional Information	Reduced Watts/ High Color Rendering	Footnotes	Warning and Caution Notices
High Output and XHO Multi-Vapor® Metal Halide Lamps (continued)																				
250 Watts																				
ED28	PosMog	E	HOR	250	8.25	5.00	18101	MVR250/HOR	M58	12		15000	21000	10000	4200	65	Clear, Position Oriented Socket			117
		E	HOR	250	8.25	5.00	18103	MVR250/C/HOR	M58	12		15000	19700	9400	4000	65	Coated, Position Oriented Socket			117
360 Watts - Watt-Miser® Energy-Saving Replacement for 400W Metal Halide																				
ED37	E39	S	VBU	360	11.50	7.00	40053	MVR360VBU/WM/XHO	M59	6		20000	37000	24000	4200	60	Extra High Output	✓	32,49	121
		S	VBU	360	11.50	7.00	40055	MVR360C/ VBUWMXHO	M59	6		20000	35000	23000	4000	60	Extra High Output	✓	32,49	121
400 Watts																				
ED37	E39	S	VBU	400	11.50	7.00	49657	MVR400/VBU/HO	M59	6		20000	41000	26500	4000	60	High Output		49	121
		S	VBU	400	11.50	7.00	20931	MVR400SP30VBU/HO	M59	6		20000	34000	20400	3200	70	RE730 Phosphor Coating		49	121
		S	VBU	400	11.50	7.00	13923	MVR400/VBU/XHO	M59	6		20000	43000	28000	4000	55	Extra High Output		49	121
		S	VBU	400	11.50	7.00	13924	MVR400/C/VBU/XHO	M59	6		20000	42000	27000	3700	55	Extra High Output		49	121
ED28	E39	E	VBU	400	8.31	5.00	40335	MVR400/VBUED28HO	M59	12		20000	41000	26500	4000	60	Clear, Compact		49	121
BT28	E39	E	HOR	400	8.25	5.00	40201	MVR400/HOR/BT28	M59	12		20000	37000	22000	4200	65	Compact, Horizontal		49	117
BT37	E39	E	HOR	400	11.50	7.00	26218	MVR400/HOR/MOG	M59	6		20000	38000	22500	4200	65	Clear		49	117
		E	HOR	400	11.50	7.00	26219	MVR400/C/HOR/MOG	M59	6		20000	36800	22000	3900	70	Coated		49	117
1000 Watts																				
BT56	E39	S	VBU	1000	15.37	9.50	44835	MVR1000/VBU/HO	M47	6		15000	111000	87000	3800	65	Clear		49	121
Sports Lighting																				
1000 Watts																				
PAR64	G38	E	U	1000	6.87		88514	SPL1000/PAR64840	HID	1	1,350,000	3500	63000		4000	80	Clear, Narrow Spot		38	124
		E	U	1000	6.87		88513	SPL1000/PAR64/HR	HID	1	1,350,000	3500	63000		4000	80	Clear, Narrow Spot		38	124
1500 Watts																				
T7	Rx7s	E	H	1500	10.12	5.00	16920	SPL1500/H/652	HID	1		6000	120000	90000	5200	65	Frosted		38	125
BT56	E39	E	U	1500	15.37	9.50	47326	MVR1500/U/SPORTS	M48	6		3000	162000H/ 170000V	137000H/ 153000V	4000	65	Clear		17,42,49	117
1650 Watts																				
BT56	PosMog	E	HOR	1650	15.37	9.50	25532	MVR1650/HOR	M112	6		3000	177000	145000	3200	65	Clear, Position Oriented Socket		17,49	117
Protected Multi-Vapor® Metal Halide Lamps																				
50 Watts																				
ED17	E26	O	U	50	5.43	3.43	45670	MXR50/U/MED/O	M110	6		10000	3200	1700	3500	70	Clear, Protected			120
		O	U	50	5.43	3.43	45671	MXR50/C/U/MED/O	M110	6		10000	3200	1500	3500	70	Coated, Protected			120
70 Watts																				
ED17	E26	O	U	70	5.43	3.43	12377	MXR70/U/MED/O	M98	6		15000	5500	3500	3200	70	Clear, Protected			120
		O	U	70	5.43	3.43	12577	MXR70/C/U/MED/O	M98	6		15000	4900	3300	3200	70	Coated, Protected			120
100 Watts																				
ED17	E26	O	U	100	5.43	3.43	12381	MXR100/U/MED/O	M90	6		15000	9000	6200	3200	70	Clear, Protected			120
		O	U	100	5.43	3.43	12579	MXR100/C/U/MED/O	M90	6		15000	8500	5900	3200	70	Coated, Protected			120
150 Watts																				
ED17	E26	O	U	150	5.43	3.43	45683	MXR150/U/MED/O	M102	6		15000	12500	8600	3500	70	Clear, Protected			120
		O	U	150	5.43	3.43	45688	MXR150/C/U/MED/O	M102	6		15000	12000	8300	3500	70	Coated, Protected			120
175 Watts																				
ED28	EX39	O	VBU	175	8.25	5.00	49470	MPR175/VBU/O	M57	6		10000	15700	8400	4000	65	Clear, Protected, UV Control			119
		O	VBU	175	8.25	5.00	11649	MPR175/C/VBU/O	M57	6		10000	14300	7700	3800	70	Coated, Protected, UV Control			119
		O	VBU	175	8.25	5.00	61325	MPR175/VBU/PA/O	M137, M152	6		15000	16000	11000	3900	65	Clear, Protected, UV Control			120
250 Watts																				
ED28	EX39	O	VBU	250	8.25	5.00	49471	MPR250/VBU/O	M58	6		10000	21300	14200	4000	65	Clear, Protected, UV Control			119
		O	VBU	250	8.25	5.00	11650	MPR250/C/VBU/O	M58	6		10000	19500	12900	3800	70	Coated, Protected, UV Control			119
		O	VBU	250	8.25	5.00	61326	MPR250/VBU/PA/O	M138, M153	6		15000	23000	16600	3800	75	Clear, Protected, UV Control			120

For the most up-to-date product information, see www.gelighting.com. To convert inches to millimeters, multiply by 25.4.
All footnotes, warning and caution notices found at the end of this section (page 3-19).

Bulb Shape	Base	LET	OP	Watts	MOL (in)	LCL (in)	Order Code	Description	ANSI Ballast Type	Case Qty	CBCP	Rated Life (hrs)	Initial Lumens	Mean Lumens	Color Temp K	CRI	Additional Information	Reduced Watts/ High Color Rendering	Footnotes	Warning and Caution Notices
Protected Multi-Vapor® Metal Halide Lamps (continued)																				
320 Watts																				
ED37	EX39	O	VBU	320	11.50	7.00	46275	MPR320/VBU/XHOPA	M132/ M154	6		20000	32000	22500	4000	65	Clear, Protected, UV Control, Extra High Output			120
		O	VBU	320	11.50	7.00	46276	MPR320C/VBUXHOPA	M132/ M154	6		20000	30500	21500	3700	70	Coated, Protected, UV Control, Extra High Output			120
ED28	EX39	O	VBU	320	8.25	5.00	19609	MPR320/C/PA/ED28	M132/ M154	12		20000	30600	22500	3700	70	Coated, Protected, UV Control		43	120
350 Watts																				
ED37	EX39	O	VBU	350	11.50	7.00	10202	MPR350/VBU/PA	M131	6		20000	35200	24600	3700	65	Clear, Protected, UV Control		43	120
		O	VBU	350	11.50	7.00	48824	MPR350/C/VBU/PA	M131	6		20000	33400	26500	3700	70	Coated, Protected, UV Control		43	120
		O	VBU	350	11.50	7.00	48825	MPR350C/VBU3K/PA	M131	6		20000	33400	23500	3200	70	Coated, Protected, UV Control		43	120
360 Watts - Watt-Miser® Energy-Saving Replacement for 400W Metal Halide																				
ED37	EX39	O	VBU	360	11.50	7.00	40056	MPR360VBUWM/HO/O	M59/ M165	6		20000	36000	23500	4000	60	Clear, Protected		32,49	119
		O	VBU	360	11.50	7.00	11685	MPR360CVBUWMHO/O	M59/ M165	6		20000	35000	22500	3700	60	Coated, Protected		32,49	119
400 Watts																				
ED37	EX39	O	VBU	400	11.50	7.00	18708	MPR400/VBU/HO/O	M59	6		20000	40000	26000	3400	65	Clear, Protected		49	119
		O	VBU	400	11.50	7.00	13582	MPR400C/VBU/HO/O	M59	6		20000	38000	25000	3200	65	Coated, Protected		49	119
		O	VBU	400	11.50	7.00	46273	MPR400/VBU/XHOPA	M135/ M155	6		20000	42000	29500	4000	65	Clear, Protected, UV Control, Extra High Output		43,49	120
		O	VBU	400	11.50	7.00	46274	MPR400C/VBUXHOPA	M135/ M155	6		20000	40000	28000	3700	70	Coated, Protected, UV Control, Extra High Output		43,49	120
1000 Watts																				
BT56	EX39	O	VBU	1000	15.37	9.50	41433	MPR1000/VBU/HO/O	M47	6		12000	110000	88500	3500	65	Clear, Protected		49	119
Chromafit™ Multi-Vapor® Metal Halide Lamps (HPS Retrofit Lamps)																				
250 Watts																				
ED28	E39	E	VBU	250	8.25	5.75	12762	MVR250/VBU/R	S50	12		10000	18500	13900	4500	65	Clear, HPS Retrofit		50	116
		E	VBU	250	8.25	5.75	12769	MVR250/C/VBU/R	S50	12		10000	18000	13000	4000	70	Coated, HPS Retrofit		50	116
400 Watts																				
ED28	E39	E	U	400	8.31	5.00	26851	MVR400/U/ED28/R	S51	12		15000H/ 20000V	33100H/ 36000V	20200H/ 22000V	4000	65	Clear, Compact, HPS Retrofit,		49,50	116
ED37	E39	S	VBU	400	11.50	5.75	12770	MVR400/VBU/R	S51	6		20000	37600	22600	4500	65	Clear, HPS Retrofit		49,50	122
		S	VBU	400	11.50	5.75	12772	MVR400/C/VBU/R	S51	6		20000	35700	21400	4000	70	Coated, HPS Retrofit		49,50	122
Lucalox® High Pressure Sodium Lamps																				
150 Watts																				
ED28	E39	O	U	150	8.31	5.00	44243	LU150/100(ED28)	S56	12		24000+	15000	13500	2000	22	Clear, 100V			111
600 Watts																				
T15	E39	O	U	600	11.06	6.62	27187	LU600/T	S106	12		24000	90000	81000	2000	22	Clear			111
750 Watts																				
ED37	E39	O	U	750	11.50	6.75	14682	LU750	S111	6		24000+	110000	99000	2100	22	Clear			111
Ecolux® High Pressure Sodium Lamps (TCLP Compliant)																				
35 Watts																				
B17	E26	O	U	35	5.43	3.43	11668	LU35/MED/ECO	S76	6		16000	2250	2025	1900	22	TCLP Compliant			111
		O	U	35	5.43	3.43	26420	LU35/MED/CP	S76	4		16000	2250	2025	1900	22	TCLP Compliant, Consumer Pack			111
50 Watts																				
B17	E26	O	U	50	5.43	3.43	11345	LU50/MED/ECO	S68	6		24000+	4000	3600	1900	22	TCLP Compliant			111
		O	U	50	5.43	3.43	26421	LU50/MED/CP	S68	4		24000+	4000	3600	1900	22	TCLP Compliant, Consumer Pack			111
B17	E26	O	U	50	5.43	3.43	11347	LU50/D/MED/ECO	S68	6		24000+	3800	3420	1900	22	TCLP Compliant, Diffuse			111
ED23.5	E39	O	U	50	7.75	5.00	44975	LU50/H/ECO	S68	12		24000+	4000	3600	1900	22	TCLP Compliant			111
		O	U	50	7.75	5.00	45006	LU50/D/H/E/CO	S68	12		24000+	3800	3420	1900	22	TCLP Compliant, Diffuse			111

For the most up-to-date product information, see www.gelighting.com. To convert inches to millimeters, multiply by 25.4.
All footnotes, warning and caution notices found at the end of this section (page 3-19).

Bulb Shape	Base	LET	OP	Watts	MOL (in)	LCL (in)	Order Code	Description	ANSI Ballast Type	Case Qty	CBCP	Rated Life (hrs)	Initial Lumens	Mean Lumens	Color Temp K	CRI	Additional Information	Reduced Watts/ High Color Rendering	Footnotes	Warning and Caution Notices
Ecolux® High Pressure Sodium Lamps (TCLP Compliant) (continued)																				
70 Watts																				
B17	E26	O	U	70	5.43	3.43	11339	LU70/MED/ECO	S62	6		24000+	6400	5450	1900	22	TCLP Compliant			111
		O	U	70	5.43	3.43	26422	LU70/MED/CP	S62	4		24000+	6400	5450	1900	22	TCLP Compliant, Consumer Pack			111
		O	U	70	5.43	3.43	11340	LU70/D/MED/ECO	S62	6		24000+	5950	5050	1900	22	TCLP Compliant, Diffuse			111
ED23.5	E39	O	U	70	7.75	5.00	85368	LU70/H/ECO	S62	12		24000+	6400	5450	1900	22	TCLP Compliant			111
		O	U	70	7.75	5.00	26426	LU70/CP	S62	4		24000+	6400	5450	1900	22	TCLP Compliant, Consumer Pack			111
		O	U	70	7.75	5.00	72605	LU70/D/H/ECO	S62	12		24000+	5950	5050	1900	22	TCLP Compliant, Diffuse			111
100 Watts																				
B17	E26	O	U	100	5.50	3.43	13250	LU100/MED/ECO	S54	6		24000+	9500	8550	2000	22	TCLP Compliant			111
		O	U	100	5.50	3.43	26423	LU100/MED/CP	S54	4		24000+	9500	8550	2000	22	TCLP Compliant, Consumer Pack			111
		O	U	100	5.50	3.43	13251	LU100/D/MED/ECO	S54	6		24000+	8800	7920	2000	22	TCLP Compliant, Diffuse			111
ED23.5	E39	O	U	100	7.75	5.00	85369	LU100/H/ECO	S54	12		24000+	9500	8550	2000	22	TCLP Compliant			111
		O	U	100	7.75	5.00	26427	LU100/CP	S54	4		24000+	9500	8550	2000	22	TCLP Compliant, Consumer Pack			111
		O	U	100	7.75	5.00	72606	LU100/D/H/ECO	S54	12		24000+	8800	7920	2000	22	TCLP Compliant, Diffuse			111
150 Watts																				
B17	E26	O	U	150	5.75	3.50	13252	LU150/MED/ECO	S55	6		24000+	16000	14400	2000	22	TCLP Compliant			111
		O	U	150	5.75	3.50	26424	LU150/MED/CP	S55	4		24000+	16000	14400	2000	22	TCLP Compliant, Consumer Pack			111
		O	U	150	5.75	3.50	13253	LU150/D/MED/ECO	S55	6		24000+	15000	13500	2000	22	TCLP Compliant, Diffuse			111
ED23.5	E39	O	U	150	7.75	5.00	85371	LU150/55/H/ECO	S55	12		24000+	16000	14400	2000	22	TCLP Compliant			111
		O	U	150	7.75	5.00	26429	LU150/55/CP	S55	4		24000+	16000	14400	2000	22	TCLP Compliant, Consumer Pack			111
		O	U	150	7.75	5.00	85380	LU150/55/D/H/ECO	S55	12		24000+	15000	13500	2000	22	TCLP Compliant, Diffuse			111
200 Watts																				
ED18	E39	O	U	200	9.75	5.75	85372	LU200/H/ECO	S66	12		24000+	22000	19800	2100	22	TCLP Compliant			111
250 Watts																				
ED18	E39	O	U	250	9.75	5.75	85377	LU250/H/ECO	S50	12		24000+	28000	25200	2100	22	TCLP Compliant			111
ED18	E39	O	U	250	9.75	5.75	26430	LU250/CP	S50	4		24000+	28000	25200	2100	22	Clear, Consumer Pack			111
ED28	E39	O	U	250	9.00	5.00	85381	LU250/D/H/ECO	S50	12		24000+	26000	23400	2100	22	TCLP Compliant, Diffuse			111
310 Watts																				
ED18	E39	O	U	310	9.75	5.75	76996	LU310/H/ECO	S67	12		24000+	37000	33300	2100	22	TCLP Compliant			111
400 Watts																				
ED18	E39	O	U	400	9.75	5.75	85379	LU400/H/ECO	S51	12		24000+	51000	45000	2100	22	TCLP Compliant			111
ED18	E39	O	U	400	9.75	5.75	26431	LU400/CP	S51	4		24000+	51000	45000	2100	22	Clear, Consumer Pack			111
ED37	E39	O	U	400	11.31	7.00	76998	LU400/D/H/ECO	S51	6		24000+	47500	42750	2100	22	TCLP Compliant, Diffuse			111
1000 Watts																				
E25	E39	O	U	1000	15.06	8.75	44058	LU1000/ECO	S52	6		24000+	130000	117000	2100	22	TCLP Compliant		49	111
Ecolux® Standby Longlife Lucalox® Lamps (TCLP Compliant)																				
70 Watts																				
ED23.5	E39	O	U	70	7.75	5.00	61367	LU70/SBY/XL/ECO	S62	12		40000	6400	5050	2000	22	Clear, Standby Longlife, Dual Arc Tube, TCLP Compliant			111
100 Watts																				
ED23.5	E39	O	U	100	7.75	5.00	61368	LU100/SBY/XL/ECO	S54	12		40000	9500	8190	2000	22	Clear, Standby Longlife, Dual Arc Tube, TCLP Compliant			111
150 Watts																				
ED23.5	E39	O	U	150	7.75	5.00	61369	LU150/55SBYXLECO	S55	12		40000	16000	14000	2000	22	Clear, Standby Longlife, Dual Arc Tube, TCLP Compliant			111
200 Watts																				
ED18	E39	O	U	200	9.75	5.75	61370	LU200/SBY/XL/ECO	S66	12		40000	21500	18150	2000	22	Clear, Standby Longlife, Dual Arc Tube, TCLP Compliant			111

For the most up-to-date product information, see www.gelighting.com. To convert inches to millimeters, multiply by 25.4.
All footnotes, warning and caution notices found at the end of this section (page 3-19).

Bulb Shape	Base	LET	OP	Watts	MOL (in)	LCL (in)	Order Code	Description	ANSI Ballast Type	Case Qty	CBCP	Rated Life (hrs)	Initial Lumens	Mean Lumens	Color Temp K	CRI	Additional Information	Reduced Watts/ High Color Rendering	Footnotes	Warning and Caution Notices
Ecolux® Standby Longlife Lucalox® Lamps (TCLP Compliant) (continued)																				
250 Watts																				
ED18	E39	O	U	250	9.75	5.75	61371	LU250/SBY/XL/ECO	S50	12		40000	27500	24750	2000	22	Clear, Standby Longlife, Dual Arc Tube, TCLP Compliant			111
400 Watts																				
ED18	E39	O	U	400	9.75	5.75	61372	LU400/SBY/XL/ECO	S51	12		40000	50000	45000	2000	22	Clear, Standby Longlife, Dual Arc Tube, TCLP Compliant		49	111
Standby Longlife Lucalox® Lamps																				
1000 Watts																				
E25	E39	O	U	1000	15.06	8.75	27185	LU1000/SBY/XL	S52	6		40000	127000	115000	2100	22	Clear, Standby Longlife, Dual Arc Tube		49	111
Ecolux® NC Non-Cycling High Pressure Sodium Lamps (TCLP Compliant)																				
70 Watts																				
ED23.5	E39	O	U	70	7.75	5.00	14672	LU70/ECO/NC	S62	12		30000	6300	5670	1900	23	Clear, Non-Cycling			111
100 Watts																				
ED23.5	E39	O	U	100	7.75	5.00	14673	LU100/ECO/NC	S54	12		30000	9800	8820	2000	23	Clear, Non-Cycling			111
150 Watts																				
ED23.5	E39	O	U	150	7.75	5.00	40390	LU150/55/ECO/NC	S55	12		40000	16000	14400	2000	23	Clear, Non-Cycling			111
200 Watts																				
ED18	E39	O	U	200	9.75	5.75	45059	LU200/ECO/NC	S66	20		30000	22000	19800	2100	22	Clear, Non-Cycling			111
250 Watts																				
ED18	E39	O	U	250	9.75	5.75	14674	LU250/ECO/NC	S50	12		40000	29000	26100	2000	30	Clear, Non-Cycling			111
400 Watts																				
ED18	E39	O	U	400	9.75	5.75	14675	LU400/ECO/NC	S51	12		40000	54000	48600	2100	30	Clear, Non-Cycling			111
Lucalox® PSL Lamps for Greenhouse																				
400 Watts																				
T15	E40	O	U	400	11.5	6.89	41845	LU400/XOPSL/T/40	HID	12		12000	56500		2100	22	Clear, 110V			111
600 Watts																				
T15	E40	O	U	600	11.5	6.65	41850	LU600/XOPSL/T/40	HID	12		12000	90000		2100	22	Clear, 115V			111
750 Watts																				
T16	E40	O	U	750	11.5	6.73	41856	LU750/XOPSL/T/40	HID	12		10000	112000		2100	22	Clear, 115V			111
		O	U	750	11.5	6.89	76134	LU750/400PSL/T40	HID	12		12000	112000		2100	22	Clear, 205V			111
Mercury Lamps																				
100 Watts																				
ED17	E26	O	U	100	5.43	3.50	17113	HR100DX38/MED	H38	5		20000	4000	2800	3900	50	Deluxe White			113
ED23.5	E39	O	U	100	7.50	5.00	12471	HR100A38	H38	5		20000	3850	2695	5700	15	Clear			113
		O	U	100	7.50	5.00	22575	HR100DX38	H38	12		20000	4000	2800	3900	50	Deluxe White			113
		O	U	100	7.50	5.00	26437	HR100DX38/CP	H38	4		20000	4000	2800	3900	50	Deluxe White, Consumer Pack			113
175 Watts																				
ED28	E39	O	U	175	8.25	5.00	24048	HR175A39	H39	12		20000	7850	6670	5700	15	Clear			113
		O	U	175	8.25	5.00	26440	HR175A39/CP	H39	4		20000	7850	6670	5700	15	Clear, Consumer Pack			113
		O	U	175	8.25	5.00	24062	HR175DX39	H39	12		20000	7800	6630	3900	50	Deluxe White			113
		O	U	175	8.25	5.00	26439	HR175DX39/CP	H39	4		20000	7800	6630	3900	50	Deluxe White, Consumer Pack			113
250 Watts																				
ED28	E39	O	U	250	8.25	5.00	24068	HR250A37	H37	12		20000	11000	7700	5700	15	Clear			113
		O	U	250	8.25	5.00	32127	HR250DX37	H37	12		20000	11200	7840	3900	50	Deluxe White			113
400 Watts																				
ED37	E39	O	U	400	11.31	7.00	23974	HR400A33	H33	6		20000	21000	14700	5700	15	Clear			113
		O	U	400	11.31	7.00	23998	HR400DX33	H33	6		20000	22600	15800	3900	50	Deluxe White			113

General Information

Fixture Requirements – Lamp Enclosure type

HID lamps have fixture requirements that must be followed. The following three codes identify the appropriate fixture for a particular lamp. Lamps having an "O" code can be operated in an "Open or Enclosed" fixture. Lamps with a "S" code can be used in open fixtures only if operated in a vertical ±15° burn position. Lamps in all other burn positions must be suitably enclosed.

O = Open or Enclosed Fixtures

E = Enclosed Fixtures Only

S = Lamps operated in a vertical position (Base Up or Down), ±15°, can be used in an open fixture. Lamps burned in any other orientation must be used in "enclosed fixtures only."

Use in Enclosed Fixtures. "Enclosed" fixture means a fixture suitably enclosed and designed to contain fragments of hot quartz or glass (up to 1100°C) per UL Standard #1598 (if in doubt, contact your fixture manufacturer).

Use In Open Fixtures. For lamps operated in the vertical position ±15° that are not designated "Enclosed Fixtures Only," lamp may be used in an open or enclosed lighting fixture depending upon the application and operating environment. For example, if the lamp is located near combustible material or in an area which is unoccupied for extended periods, an enclosed fixture which can contain fragments of hot quartz or glass is recommended. For more information, contact your fixture manufacturer.

Protection of Bulbs from Moisture

Outer bulbs of HID lamps are made of heat-resistant glass, designed to have strength and thermal-shock-resistant characteristics suitable for normal applications in typical luminaries. However, shielding of lamps must be provided to avoid bulb breakage that could result from direct contact with liquids (such as water) during operation.

Rated Life

Values are based on laboratory tests of a large number of representative lamps under controlled conditions, including operation at 10 hours per start on ballasts having specified electrical characteristics. Individual lamps or groups of lamps may, of course, vary from the Rated Life shown. Lamp operating conditions can also affect life. Where Rated Life is less than 24,000 hours, it is a MEDIAN value of life expectancy; that is, the total operating time at which, under normal operating conditions, 50% of any large group of initially installed lamps is expected to be still burning. Where Rated Life is 24,000+ hours, 67% of lamps are expected to be still burning at 24,000 hours. For cost-of-light calculations involving these lamps, if an estimated operating time is required at which 50% of the lamps will still be burning, a value of 28,500 hours is suggested. At burning cycles shorter than 10 hours per start, the median life will be shortened approximately as follows:

5 hrs/start:	approx. life 75% of rating
2-1/2 hrs/start:	approx. life 56% of rating
1-1/4 hrs/start:	approx. life 42% of rating

Lumens – Lumens listed are reference lumens

Rated average lamp lumens are obtained under controlled laboratory conditions in a prescribed burning position. **Initial Reference Lumens** refer to the lamp lumen output after 100-hours burning. **Mean Reference Lumens** refer to the lamp lumen output at the mean lumen point during lamp life. The mean lumen point occurs at 50% rated life for HPS and mercury lamps, and at 40% rated life for metal halide lamps. Lamp performance on typical systems under typical service conditions will vary from the reference lumen ratings.

High Intensity Discharge lighting systems are subject to a wide range of variations which may affect final lighting levels. As a result, lamp performance on actual systems may vary due to lamp orientation, ambient temperatures, ballast variations, line voltage and other reasons. Care must be taken when choosing a system to consider how these changes can affect your light levels both initially and at the mean lumen point.

Ballasts

HID lamps (except E-Z-Merc®) require auxiliary ballast equipment designed to produce proper electrical values. Actual lamp watts may vary depending on ballast characteristics. For total system watts, add nominal ballast watts.

All Lucalox®, Mercury, and Metal Halide lamps (except I-Line) will start at ambient temperatures of -22°F (-30°C). I-Line Multi-Vapor® will start at ambient temperatures of 5°F (-15°C) when used on approved mercury ballasts.

Start Characteristics

Full light output does not occur immediately when power is applied. Instead, there is a time delay for the lamp to reach 90% total light output. The starting delay for High Pressure Sodium is 3-4 minutes, for Metal Halide 2-5 minutes, and for Mercury 5-7 minutes.

Restart Characteristics

With a power interruption of a half cycle or more, the arc will extinguish. When power is immediately reapplied, full light output does not occur immediately. For HPS lamps there is a delay of 1 minute to reach 90% total light output; however, Lucalox® LU1000 requires 2 minutes and E-Z Lux® lamps require 3 minutes to reach 90% total light output. For most Metal Halide lamps, including CMH®, when the power is immediately reapplied, there will be a delay of 10 to 17 minutes before the lamps reach the 90% light output level. PulseArc® lamps restrike in <4 minutes. The restart delay for mercury lamps is 3 to 6 minutes to reach 90% total light output.

Operating Positions and Codes

Mercury and High Pressure Sodium lamps may be operated in any burn position and will still maintain their rated performance specifications. Metal Halide and Low Pressure Sodium lamps, however, are optimized for performance in specific burn positions, or may be restricted to certain burn positions for safety reasons.

U = Universal burning position

HBU = Horizontal -15° to Base Up

HBD = Horizontal +15° to Base Down

HOR = Horizontal ±15°

HOR PA = ±75°

HOR ±60° = applies to MVR 1650

H45 = Horizontal to ±45° only

VBU = Vertical Base Up ±15°

VBD = Vertical Base Down ±15°

If no special burn position is noted, the burn position is universal.

HID Color

The color temperature and CRI listed in the tabular data are for reference purposes only. All high intensity discharge lamps exhibit some degree of lamp-to-lamp color variation and shift over life. These characteristics can be increased based on choice of fixture, ballast, burning position, and ambient conditions. Color variation can be greater than normal during the initial 100 hours of burning. Where color consistency is important, consider using ConstantColor® CMH® for better performance. Contact your local GE Lighting representative for more information.

Export Base Lamps (/27 and /40)

Export only lamps have a non-domestic (non-U.S.) base and are not intended for use in the United States due to potential shock hazard. The lamps are identified by "/27" or "/40" at the end of the lamp description and comply with electrical characteristics defined by IEC standards.

Operating Notes

CMH® Chromafit™ Metal Halide Lamps

Use in enclosed luminaire with front cover made of glass, capable of containing the fragments of a lamp should it shatter, to avoid risk of fire. Do not use with Polymeric Lens.

MXR32 Metal Halide Lamp and Electronic Ballast

MXR32 lamps must be operated on GE's special, high-power-factor electronic ballast, HAL32/120. Outside dimensions for the ballast are 9-1/4" long, 3-1/8" wide and 1-3/4" high.

Dimming

High Wattage CMH® lamps may be dimmed to 50% of full rated wattage. With dimming, the color shifts to a cooler (higher Kelvin) temperature and CRI decreases. The dimming of 20-150W CMH® lamps is not normally recommended. Large power reductions significantly alter the thermal characteristics of the lamp resulting in color shift. Quartz metal halide and mercury vapor lamps may be dimmed to 50% of full rated wattage. High pressure sodium lamps may be dimmed to 35%. For all dimming, the lamp must be started in full-power mode and must be operated in that mode for a minimum of fifteen minutes prior to reduced-power operation. Minimum open circuit voltage must meet ANSI requirements at full-power, during power transition, and in the reduced-power mode to prevent premature cycling (see appropriate ANSI lamp documents for specific minimum OCV requirements). Other application guidelines may apply.

Footnotes

9 Do not use this lamp in fixtures designed for less than rated lamp wattage.

14 Life shown is for vertical +15° operation.

16 Approximate lumen ratings at 45° burning position: Initial – 145,000. Mean – 124,000.

17 Rated life based on 5 or more burning hours per start.

28 Use only 1000-watt H12 or H34-type ballasts. Do not use on 1000-watt H36-type ballasts.

32 Lamp will run at 400-watts when used on a linear reactor ballast.

33 Rated life based on 11 hours per start.

38 Requires a non-ANSI designated ballast with a special, add-on metal halide ignitor. Contact your local GE representative for a list of approved ballasts and ignitors.

39 UV Control is a quartz material that effectively cuts UVB and UVC radiation.

42 Approximate lumen ratings at 45° burning position: Initial – 153,000. Mean – 139,000.

43 When operated on a 120 hrs. cycle (minimum), lamp life rating may be extended by up to 50% based on engineering estimates.

44 Rated life based on 7 hours per start.

45 Use low frequency square wave (LFSW) electronic ballast, peak lead ballast, or system which can shut itself off if ballast overheating occurs.

46 Use only with the following types of H39 175-watt mercury ballasts: high-reactance lag-type autotransformers or 240-volt and 277-volt reactors. Do not use with CW (lead-type) or CWA ballasts.

47 Use only with the following types of H37 250-watt mercury ballasts: high-reactance lag-type autotransformers or 240-volt and 277-volt reactors. Do not use with CW (lead-type) or CWA ballasts.

48 Use only with the following types of H33 400-watt mercury ballasts: high-reactance lag-type autotransformers, reactors, CWA auto regulators or CW regulators.

49 Not for use with lampholders that have stainless steel center contacts to avoid lamp or lampholder damage due to arcing.

50 Not for use on Magnetic-Regulator or Electronic-Regulator ballast systems to avoid ballast overheating.

51 Use only with low frequency square wave (LFSW) electronic ballast.

52 Use only with approved ballast, do not use on high frequency electronic ballasts.

53 Rated life is 15000 hours on magnetic ballasts.

Warning Notices

THE FOLLOWING WARNING NOTICES MUST BE COMPLIED WITH TO HELP AVOID POSSIBLE LAMP RUPTURE. General Electric Company will not be responsible for poor lamp performance, personal injury or property damage resulting from failure to follow these instructions.

HID LAMPS – GENERAL

WARNING

Most HID lamps are constructed of an outer bulb with an internal arc tube made of quartz. The arc tube operates under high pressure at very high temperatures—as high as approximately 1100°C. The arc tube and outer bulb may unexpectedly rupture due to internal causes or external factors such as a system failure or misapplication.

An arc tube rupture can burst and shatter the outer glass bulb resulting in the discharge of glass fragments and extremely hot quartz particles (as high as 1100°C). There is a risk of personal injury, property damage, burns and fire.

Some lamps are position-sensitive and must only be operated in specified burning positions (see "Additional Information" column in this catalog) with compatible electrical equipment in the types of fixtures prescribed in "Lamp Enclosure Type" on page 3-22 of this catalog.

In addition to the general warnings above, there are specific warnings for the HID lamp types listed below.

Metal Halide Lamps

Fixture lens/diffuser material must be able to contain fragments of hot quartz or glass (up to 1100°C). If you do not know whether your fixture can safely withstand an arc tube rupture, contact your fixture manufacturer.

In continuously operating systems (24 hours/day, 7 days/week), turn lamps off once per week for at least 15 minutes. FAILURE TO COMPLY INCREASES THE RISK OF RUPTURE.

Ceramic metal halide lamps can be operated 24/7.

Relamp fixtures at or before the end of rated life. Beyond rated life, light output diminishes while energy consumption and risk of rupture increase.

High Pressure Sodium Lamps

This is a vacuum jacket lamp and may implode if broken. As a precaution, wear safety glasses and gloves when installing or removing lamp. High pressure sodium lamps are not position-sensitive and may be operated in any burning position.

Mercury Lamps

Fixture lens/diffuser material must be able to contain fragments of hot quartz or glass (up to 1100°C). If you do not know whether your fixture can safely withstand an arc tube rupture, contact your fixture manufacturer.

Relamp fixtures at or before the end of rated life. Beyond rated life, light output diminishes while energy consumption and risk of rupture increase.

Mercury lamps are not position-sensitive and may be operated in any burning position.

Low Pressure Sodium Lamps

These lamps contain sodium which will ignite when exposed to water. If lamps are not disposed of properly, there is a risk of fire in the disposal vessel. Consult GE for disposal instructions.

Lamp Enclosure Type

Use in Enclosed Fixtures. "Enclosed" fixture means a fixture suitably enclosed and designed to contain fragments of hot quartz or glass (up to 1100°C) in accordance with UL Standard #1598 (if in doubt, contact your fixture manufacturer).

Use In Open Fixtures. For lamps operated in the vertical position ±15° that are not designated "Enclosed Fixtures Only," lamp may be used in an open or enclosed lighting fixture depending upon the application and operating environment. For example, if the lamp is located near combustible material or in an area which is unoccupied for extended periods, an enclosed fixture which can contain fragments of hot quartz or glass is recommended. For more information, contact your fixture manufacturer.

Important Notice

In accordance to Federal Regulations (21 CFR 1040.30), the following notice applies to all lamps in the HID section of this catalog except E-Z Merc self ballasted lamps, High Pressure, Low Pressure Sodium Lamps, Saf-T-Gard® Multi-Vapor Lamps, CMH® MR16, CMH® PAR20 and CMH® PAR30.

⚠ R WARNING: **This lamp can cause serious skin burn and eye inflammation from shortwave ultraviolet radiation if outer envelope of the lamp is broken or punctured. Do not use where people will remain for more than a few minutes unless adequate shielding or other safety precautions are used. Lamps that will automatically extinguish when the outer envelope is broken or punctured are commercially available.**

Warning and Caution Notices

100 – CMH® PAR38 INTEGRAL Kr85

⚠ WARNING

Risk of electric shock

- Turn power off before inspection, installation or removal
- Do not use where directly exposed to water
- Not for use with dimmers
- Do not open - no user serviceable parts inside

Risk of fire

- Keep combustible materials away from lamp
- Do not use in totally enclosed recessed fixtures

A damaged lamp emits UV radiation which may cause eye/skin injury

- Turn power off if glass bulb is broken. Remove and dispose of lamp.

Unexpected lamp rupture may cause injury, fire, or property damage

- Do not exceed rated voltage
- Do not use lamp if outer glass is scratched or broken
- Do not store flammable materials near/below lamp
- Do not use beyond rated life
- Do not turn on lamp until fully installed

⚠ CAUTION

Risk of burn

- Allow lamp to cool before handling
- Do not turn on lamp until fully installed

Lamp may shatter and cause injury if broken

- Do not use lamp if outer glass is scratched or broken
- Dispose of lamp in a closed container
- Do not use excessive force when installing lamp

Notes

- ARC tube fill gas contains Kr85
- CMH® lamps may operate 24 hours a day/7 days a week to rated life—no shut off required
- This product complies with Part 18 of the FCC Rules, but may cause interference to radios, televisions, wireless telephones, and remote controls. Avoid placing this product near these devices. If interference occurs, move the product away from the device or plug either into a different outlet. Do not install this product near maritime safety equipment or other critical navigation or communication equipment operating between 0.45-30 MHz. This device is not intended for use with emergency exit fixtures or lights, electronic timers, photocells, or with dimmers
- Use only on 120V, 60Hz circuits. Do not operate with additional ballasts. Do not use where directly exposed to water.
- When illuminating light-sensitive materials use of an extra UV filter is recommended.
- Lamps may require several hours of operation to stabilize in color. Color change may also be affected by shock and vibration. Color appearance may vary between individual lamps.

101 – Arcstream®

⚠ WARNING

Risk of electric shock

- Turn power off before inspection, installation or removal
- Do not use where directly exposed to water or outdoors without an enclosed fixture

Risk of fire

- Keep combustible materials away from lamp
- Use in fixture rated for this product
- Use thermally protected ballast

A damaged lamp emits UV radiation which may cause eye/skin injury

- Turn power off if glass bulb is broken. Remove and dispose of lamp.

Unexpected lamp rupture may cause injury, fire, or property damage

- Do not exceed rated voltage
- Do not use where directly exposed to water or outdoors without an enclosed fixture
- Use in enclosed fixture rated for this product
- Do not use lamp if outer glass is scratched or broken
- Use only properly rated ballast
- Operate lamp only in specified position
- Turn lamp off at least once for 15 minutes per week
- Do not turn on lamp until fully installed

⚠ CAUTION

Risk of burn

- Allow lamp to cool before handling
- Do not turn on lamp until fully installed

Lamp may shatter and cause injury if broken

- Wear safety glasses and gloves when handling lamp
- Do not use lamp if outer glass is scratched or broken
- Do not use excessive force when installing lamp

102 – Arcstream® G12 Kr85

⚠ WARNING

Risk of electric shock

- Turn power off before inspection, installation or removal
- Do not use where directly exposed to water or outdoors without an enclosed fixture

Risk of fire

- Keep combustible materials away from lamp
- Use in fixture rated for this product
- Use thermally protected ballast

Lamp emits UV radiation which may cause eye/skin injury

- Eye or skin irritation may result from exposure. Use appropriate shielding. RG-2

Unexpected lamp rupture may cause injury, fire, or property damage

- Do not exceed rated voltage
- Do not touch glass with bare hands
- Do not use where directly exposed to water or outdoors without an enclosed fixture
- Use in enclosed fixture rated for this product
- Do not use lamp if outer glass is scratched or broken
- Use only properly rated ballast

Warning and Caution Notices (continued)

- Turn lamp off at least once for 15 minutes per week
- Do not turn on lamp until fully installed

⚠ CAUTION

Risk of burn

- Allow lamp to cool before handling
- Do not turn on lamp until fully installed

Lamp may shatter and cause injury if broken

- Do not use lamp if outer glass is scratched or broken
- Do not use excessive force when installing lamp

Notes

- ARC tube fill gas contains Kr85

103 – Arcstream® Rx7s Kr85

⚠ WARNING

Risk of electric shock

- Turn power off before inspection, installation or removal
- Do not use where directly exposed to water or outdoors without an enclosed fixture

Risk of fire

- Keep combustible materials away from lamp
- Use in fixture rated for this product
- Use thermally protected ballast

A damaged lamp emits UV radiation which may cause eye/skin injury

- Turn power off if glass bulb is broken. Remove and dispose of lamp.

Unexpected lamp rupture may cause injury, fire, or property damage

- Do not exceed rated voltage
- Do not touch glass with bare hands
- Do not use in wet locations
- Use in enclosed fixture rated for this product
- Do not use lamp if outer glass is scratched or broken
- Use only properly rated ballast
- Operate lamp only in specified position
- Turn lamp off at least once for 15 minutes per week
- Do not turn on lamp until fully installed

⚠ CAUTION

Risk of burn

- Allow lamp to cool before handling
- Do not turn on lamp until fully installed

Lamp may shatter and cause injury if broken

- Wear safety glasses and gloves when handling lamp
- Do not use lamp if outer glass is scratched or broken
- Dispose of lamp in a closed container
- Do not use excessive force when installing lamp

Notes

- ARC tube fill gas contains Kr85

104 – CMH® GU6.5, G12 and Mini Kr85

⚠ WARNING

Risk of electric shock

- Turn power off before inspection, installation or removal
- Do not use where directly exposed to water or outdoors without an enclosed fixture

Risk of fire

- Keep combustible materials away from lamp
- Use in fixture rated for this product
- Use fused or thermally protected ballast—see instructions

A damaged lamp emits UV radiation which may cause eye/skin injury

- Turn power off if glass bulb is broken. Remove and dispose of lamp.

Unexpected lamp rupture may cause injury, fire, or property damage

- Do not exceed rated voltage
- Normal handling with bare hands is acceptable. Excessive handling of the quartz outer bulb should be avoided.
- Do not use where directly exposed to water or outdoors without an enclosed fixture
- Use in enclosed fixture rated for this product
- Do not use lamp if outer glass is scratched or broken
- Use only properly rated ballast
- Do not use beyond rated life
- Do not turn on lamp until fully installed

⚠ CAUTION

Risk of burn

- Allow lamp to cool before handling
- Do not turn on lamp until fully installed

Lamp may shatter and cause injury if broken

- Do not use lamp if outer glass is scratched or broken
- Do not use excessive force when installing lamp

Notes

- ARC tube fill gas contains Kr85
- CMH® lamps may operate 24 hours a day/7 days a week to rated life—no shut off required

105 – CMH® HW HPS Kr85

⚠ WARNING

Risk of electric shock

- Turn power off before inspection, installation or removal
- Do not use where directly exposed to water or outdoors without an enclosed fixture

Risk of fire

- Keep combustible materials away from lamp
- Use in fixture rated for this product
- CMH® Chromafit™ lamps are compatible with properly rated magnetic HPS ballasts and low frequency square wave (LFSW) electronic ballasts. For CMH400 /R use LFSW electronic ballast, peak lead ballast or system which can shut itself off if ballast overheating occurs.

A damaged lamp emits UV radiation which may cause eye/skin injury

- Turn power off if glass bulb is broken. Remove and dispose of lamp.

Unexpected lamp rupture may cause injury, fire, or property damage

- Do not exceed rated voltage
- Do not use where directly exposed to water or outdoors without an enclosed fixture
- Use in enclosed luminaire with front cover made of GLASS, capable of containing the fragments of a lamp should it shatter, to avoid risk of fire. Do not use with polymeric lens.
- Do not use lamp if outer glass is scratched or broken
- Use only properly rated ballast
- Do not use beyond rated life
- Do not turn on lamp until fully installed

Warning and Caution Notices (continued)

⚠ CAUTION

Risk of burn

- Allow lamp to cool before handling
- Do not turn on lamp until fully installed

Lamp may shatter and cause injury if broken

- Wear safety glasses and gloves when handling lamp
- Do not use lamp if outer glass is scratched or broken
- Dispose of lamp in a closed container
- Do not use excessive force when installing lamp

Notes

- ARC tube fill gas contains Kr85
- CMH® lamps may operate 24 hours a day/7 days a week to rated life—no shut off required

106 – CMH® HW PA Kr85

⚠ WARNING

Risk of electric shock

- Turn power off before inspection, installation or removal
- Do not use where directly exposed to water or outdoors without an enclosed fixture

Risk of fire

- Keep combustible materials away from lamp
- Use GE approved ballast/control gear

A damaged lamp emits UV radiation which may cause eye/skin injury

- Turn power off if glass bulb is broken. Remove and dispose of lamp.

Unexpected lamp rupture may cause injury, fire, or property damage

- Do not exceed rated voltage
- Do not use where directly exposed to water or outdoors without an enclosed fixture
- Do not use lamp if outer glass is scratched or broken
- Use only properly rated ballast
- Operate lamp only in specified position
- Do not store flammable materials near/below lamp
- Do not use beyond rated life
- Do not turn on lamp until fully installed

⚠ CAUTION

Risk of burn

- Allow lamp to cool before handling
- Do not turn on lamp until fully installed

Lamp may shatter and cause injury if broken

- Do not use lamp if outer glass is scratched or broken
- Dispose of lamp in a closed container
- Do not use excessive force when installing lamp

Notes

- ARC tube fill gas contains Kr85
- CMH® lamps may operate 24 hours a day/7 days a week to rated life—no shut off required

107 – CMH® PAR 20-30 MR16 Kr85

⚠ WARNING

Risk of electric shock

- Turn power off before inspection, installation or removal
- Do not use where directly exposed to water or outdoors without an enclosed fixture

Risk of fire

- Keep combustible materials away from lamp
- Use in fixture rated for this product
- Use fused or thermally protected ballast—see instructions

Unexpected lamp rupture may cause injury, fire, or property damage

- Do not exceed rated voltage
- Do not use where directly exposed to water or outdoors without an enclosed fixture
- Do not use lamp if outer glass is scratched or broken
- Use only properly rated ballast
- Do not store flammable materials near/below lamp
- Do not use beyond rated life
- Do not turn on lamp until fully installed

⚠ CAUTION

Risk of burn

- Allow lamp to cool before handling
- Do not turn on lamp until fully installed

Lamp may shatter and cause injury if broken

- Do not use lamp if outer glass is scratched or broken
- Do not use excessive force when installing lamp

Notes

- ARC tube fill gas contains Kr85
- CMH® lamps may operate 24 hours a day/7 days a week to rated life—no shut off required
- Lamps designated as CMH70/PAR30 do not require thermally protected ballasts

108 – CMH® PAR38 Kr85

⚠ WARNING

Risk of electric shock

- Turn power off before inspection, installation or removal
- Do not use where directly exposed to water or outdoors without an enclosed fixture

Risk of fire

- Keep combustible materials away from lamp
- Use in fixture rated for this product

A damaged lamp emits UV radiation which may cause eye/skin injury

- Turn power off if glass bulb is broken. Remove and dispose of lamp.

Unexpected lamp rupture may cause injury, fire, or property damage

- Do not exceed rated voltage
- Do not use lamp if outer glass is scratched or broken
- Use only properly rated ballast
- Do not turn on lamp until fully installed

⚠ CAUTION

Risk of burn

- Allow lamp to cool before handling
- Do not turn on lamp until fully installed

Lamp may shatter and cause injury if broken

- Do not use lamp if outer glass is scratched or broken

Notes

- ARC tube fill gas contains Kr85
- CMH® lamps may operate 24 hours a day/7 days a week to rated life—no shut off required

Warning and Caution Notices (continued)

109 – CMH® TD Kr85

⚠ WARNING

Risk of electric shock

- Turn power off before inspection, installation or removal
- Do not use where directly exposed to water or outdoors without an enclosed fixture

Risk of fire

- Keep combustible materials away from lamp
- Use in fixture rated for this product

A damaged lamp emits UV radiation which may cause eye/skin injury

- Turn power off if glass bulb is broken. Remove and dispose of lamp.

Unexpected lamp rupture may cause injury, fire, or property damage

- Do not exceed rated voltage
- Normal handling with bare hands is acceptable. Excessive handling of the quartz outer bulb should be avoided.
- Do not use where directly exposed to water or outdoors without an enclosed fixture
- Use in enclosed fixture rated for this product
- Do not use lamp if outer glass is scratched or broken
- Use only properly rated ballast
- Operate lamp only in specified position
- Do not use beyond rated life
- Do not turn on lamp until fully installed

⚠ CAUTION

Risk of burn

- Allow lamp to cool before handling
- Do not turn on lamp until fully installed

Lamp may shatter and cause injury if broken

- Do not use lamp if outer glass is scratched or broken
- Do not use excessive force when installing lamp

Notes

- ARC tube fill gas contains Kr85
- CMH® lamps may operate 24 hours a day/7 days a week to rated life—no shut off required

110 – Kolorarc® Kr85

⚠ WARNING

Risk of electric shock

- Turn power off before inspection, installation or removal
- Do not use where directly exposed to water or outdoors without an enclosed fixture

Risk of fire

- Keep combustible materials away from lamp
- Use in fixture rated for this product

A damaged lamp emits UV radiation which may cause eye/skin injury

- Turn power off if glass bulb is broken. Remove and dispose of lamp.

Unexpected lamp rupture may cause injury, fire, or property damage

- Do not exceed rated voltage
- Do not use where directly exposed to water or outdoors without an enclosed fixture
- Use in enclosed fixture rated for this product
- Do not use lamp if outer glass is scratched or broken
- Use only properly rated ballast
- Operate lamp only in specified position
- Turn lamp off at least once for 15 minutes per week
- Do not turn on lamp until fully installed

⚠ CAUTION

Risk of burn

- Allow lamp to cool before handling
- Do not turn on lamp until fully installed

Lamp may shatter and cause injury if broken

- Wear safety glasses and gloves when handling lamp
- Do not use lamp if outer glass is scratched or broken
- Dispose of lamp in a closed container
- Do not use excessive force when installing lamp

Notes

- ARC tube fill gas contains Kr85

111 – Lucalox®

⚠ WARNING

Risk of electric shock

- Turn power off before inspection, installation or removal
- Do not use where directly exposed to water or outdoors without an enclosed fixture

Risk of fire

- Keep combustible materials away from lamp
- Use in fixture rated for this product

Contains sodium—chemical burn risk

- Avoid skin contact with broken pieces

Unexpected lamp rupture may cause injury, fire, or property damage

- Do not exceed rated voltage
- Do not use where directly exposed to water or outdoors without an enclosed fixture
- Do not use lamp if outer glass is scratched or broken
- Use only properly rated ballast
- Do not store flammable materials near/below lamp
- Do not turn on lamp until fully installed

⚠ CAUTION

Risk of burn

- Allow lamp to cool before handling
- Do not turn on lamp until fully installed

Lamp may shatter and cause injury if broken

- Wear safety glasses and gloves when handling lamp
- Do not use lamp if outer glass is scratched or broken
- Dispose of lamp in a closed container
- Do not use excessive force when installing lamp

Warning and Caution Notices (continued)

112 – Lucalox® HO

⚠ WARNING

Risk of electric shock

- Turn power off before inspection, installation or removal
- Do not use where directly exposed to water or outdoors without an enclosed fixture

Risk of fire

- Keep combustible materials away from lamp
- Use in fixture rated for this product
- Use fused or thermally protected ballast—see instructions

Contains sodium—chemical burn risk

- Avoid skin contact with broken pieces

Unexpected lamp rupture may cause injury, fire, or property damage

- Do not exceed rated voltage
- Do not use where directly exposed to water or outdoors without an enclosed fixture
- Do not use lamp if outer glass is scratched or broken
- Use only properly rated ballast
- Do not store flammable materials near/below lamp
- Do not turn on lamp until fully installed

⚠ CAUTION

Risk of burn

- Allow lamp to cool before handling
- Do not turn on lamp until fully installed

Lamp may shatter and cause injury if broken

- Wear safety glasses and gloves when handling lamp
- Do not use lamp if outer glass is scratched or broken
- Dispose of lamp in a closed container
- Do not use excessive force when installing lamp

113 – Mercury

⚠ WARNING

Risk of electric shock

- Turn power off before inspection, installation or removal
- Do not use where directly exposed to water or outdoors without an enclosed fixture

Risk of fire

- Keep combustible materials away from lamp
- Use in fixture rated for this product

A damaged lamp emits UV radiation which may cause eye/skin injury

- Turn power off if glass bulb is broken. Remove and dispose of lamp.

Unexpected lamp rupture may cause injury, fire, or property damage

- Do not exceed rated voltage
- Do not use where directly exposed to water or outdoors without an enclosed fixture
- Do not use lamp if outer glass is scratched or broken
- Use only properly rated ballast
- Do not store flammable materials near/below lamp
- Do not use beyond rated life
- Do not turn on lamp until fully installed

⚠ CAUTION

Risk of burn

- Allow lamp to cool before handling
- Do not turn on lamp until fully installed

Lamp may shatter and cause injury if broken

- Do not use lamp if outer glass is scratched or broken
- Dispose of lamp in a closed container
- Do not use excessive force when installing lamp

Notes

- ARC tube fill gas contains Kr85 (HR 1000 only)

114 – Mercury Saf-T-Gard®

⚠ WARNING

Risk of electric shock

- Turn power off before inspection, installation or removal
- Do not use where directly exposed to water or outdoors without an enclosed fixture

Risk of fire

- Keep combustible materials away from lamp
- Use in fixture rated for this product

Unexpected lamp rupture may cause injury, fire, or property damage

- Do not exceed rated voltage
- Do not use where directly exposed to water or outdoors without an enclosed fixture
- Do not use lamp if outer glass is scratched or broken
- Use only properly rated ballast
- Turn lamp off at least once for 15 minutes per week
- Do not store flammable materials near/below lamp
- Do not use beyond rated life
- Do not turn on lamp until fully installed

⚠ CAUTION

Risk of burn

- Allow lamp to cool before handling
- Do not turn on lamp until fully installed

Lamp may shatter and cause injury if broken

- Do not use lamp if outer glass is scratched or broken
- Dispose of lamp in a closed container
- Do not use excessive force when installing lamp

115 – Mercury Self-Ballasted

⚠ WARNING

Risk of electric shock

- Turn power off before inspection, installation or removal
- Do not use where directly exposed to water or outdoors without an enclosed fixture

Risk of fire

- Keep combustible materials away from lamp
- Use in fixture rated for this product

A damaged lamp emits UV radiation which may cause eye/skin injury

- Turn power off if glass bulb is broken. Remove and dispose of lamp.

Unexpected lamp rupture may cause injury, fire, or property damage

- Do not exceed rated voltage
- Do not use where directly exposed to water or outdoors without an enclosed fixture
- Do not use lamp if outer glass is scratched or broken

Warning and Caution Notices (continued)

⚠ CAUTION

Risk of burn

- Allow lamp to cool before handling
- Do not turn on lamp until fully installed

Lamp may shatter and cause injury if broken

- Do not use lamp if outer glass is scratched or broken
- Dispose of lamp in a closed container
- Do not use excessive force when installing lamp

116 – QMH E-rated Kr85 and CMH®

⚠ WARNING

Risk of electric shock

- Turn power off before inspection, installation or removal
- Do not use where directly exposed to water or outdoors without an enclosed fixture

Risk of fire

- Keep combustible materials away from lamp
- Use in fixture rated for this product

A damaged lamp emits UV radiation which may cause eye/skin injury

- Turn power off if glass bulb is broken. Remove and dispose of lamp.

Unexpected lamp rupture may cause injury, fire, or property damage

- Do not exceed rated voltage
- Do not use where directly exposed to water or outdoors without an enclosed fixture
- Use in enclosed fixture rated for this product
- Do not use lamp if outer glass is scratched or broken
- Use only properly rated ballast
- Operate lamp only in specified position
- Turn lamp off at least once for 15 minutes per week. Does not apply to CMH®
- Do not use beyond rated life
- If used on a dimming system, see instructions
- Do not turn on lamp until fully installed

⚠ CAUTION

Risk of burn

- Allow lamp to cool before handling
- Do not turn on lamp until fully installed

Lamp may shatter and cause injury if broken

- Do not use lamp if outer glass is scratched or broken
- Dispose of lamp in a closed container
- Do not use excessive force when installing lamp

Notes

- ARC tube fill gas contains Kr85
- CMH® lamps may operate 24 hours a day/7 days a week to rated life—no shut off required

117 – QMH HOR Enclosed Kr85

⚠ WARNING

Risk of electric shock

- Turn power off before inspection, installation or removal
- Do not use where directly exposed to water or outdoors without an enclosed fixture

Risk of fire

- Keep combustible materials away from lamp
- Use in fixture rated for this product

A damaged lamp emits UV radiation which may cause eye/skin injury

- Turn power off if glass bulb is broken. Remove and dispose of lamp.

Unexpected lamp rupture may cause injury, fire, or property damage

- Do not exceed rated voltage
- Do not use where directly exposed to water or outdoors without an enclosed fixture
- Use in enclosed fixture rated for this product
- Do not use lamp if outer glass is scratched or broken
- Use only properly rated ballast
- Operate lamp only in specified position
- Turn lamp off at least once for 15 minutes per week
- Do not use beyond rated life
- Do not remove base locating pin if so equipped
- Do not turn on lamp until fully installed

⚠ CAUTION

Risk of burn

- Allow lamp to cool before handling
- Do not turn on lamp until fully installed

Lamp may shatter and cause injury if broken

- Do not use lamp if outer glass is scratched or broken
- Dispose of lamp in a closed container
- Do not use excessive force when installing lamp

Notes

- ARC tube fill gas contains Kr85

118 – QMH LW Kr85

⚠ WARNING

Risk of electric shock

- Turn power off before inspection, installation or removal
- Do not use where directly exposed to water or outdoors without an enclosed fixture

Risk of fire

- Keep combustible materials away from lamp
- Use in fixture rated for this product

A damaged lamp emits UV radiation which may cause eye/skin injury

- Turn power off if glass bulb is broken. Remove and dispose of lamp.

Unexpected lamp rupture may cause injury, fire, or property damage

- Do not exceed rated voltage
- Do not use where directly exposed to water or outdoors without an enclosed fixture
- Use in enclosed fixture rated for this product
- Do not use lamp if outer glass is scratched or broken

Warning and Caution Notices (continued)

- Use only properly rated ballast
- Turn lamp off at least once for 15 minutes per week
- Do not use beyond rated life
- Do not turn on lamp until fully installed

⚠ CAUTION

Risk of burn

- Allow lamp to cool before handling
- Do not turn on lamp until fully installed

Lamp may shatter and cause injury if broken

- Do not use lamp if outer glass is scratched or broken
- Dispose of lamp in a closed container
- Do not use excessive force when installing lamp

Notes

- ARC tube fill gas contains Kr85

119 – QMH Protected

⚠ WARNING

Risk of electric shock

- Turn power off before inspection, installation or removal
- Do not use where directly exposed to water or outdoors without an enclosed fixture

Risk of fire

- Keep combustible materials away from lamp
- Use in fixture rated for this product

A damaged lamp emits UV radiation which may cause eye/skin injury

- Turn power off if glass bulb is broken. Remove and dispose of lamp.

Unexpected lamp rupture may cause injury, fire, or property damage

- Do not exceed rated voltage
- Do not use where directly exposed to water or outdoors without an enclosed fixture
- Do not use lamp if outer glass is scratched or broken
- Use only properly rated ballast
- Operate lamp only in specified position
- Turn lamp off at least once for 15 minutes per week
- Do not store flammable materials near/below lamp
- Do not use beyond rated life
- If used on a dimming system, see instructions.
- Do not turn on lamp until fully installed

⚠ CAUTION

Risk of burn

- Allow lamp to cool before handling
- Do not turn on lamp until fully installed

Lamp may shatter and cause injury if broken

- Do not use lamp if outer glass is scratched or broken
- Dispose of lamp in a closed container
- Do not use excessive force when installing lamp

120 – QMH Protected Kr85

⚠ WARNING

Risk of electric shock

- Turn power off before inspection, installation or removal
- Do not use where directly exposed to water or outdoors without an enclosed fixture

Risk of fire

- Keep combustible materials away from lamp
- Use in fixture rated for this product

A damaged lamp emits UV radiation which may cause eye/skin injury

- Turn power off if glass bulb is broken. Remove and dispose of lamp.

Unexpected lamp rupture may cause injury, fire, or property damage

- Do not exceed rated voltage
- Do not use where directly exposed to water or outdoors without an enclosed fixture
- Do not use lamp if outer glass is scratched or broken
- Use only properly rated ballast
- Operate lamp only in specified position
- Turn lamp off at least once for 15 minutes per week
- Do not store flammable materials near/below lamp
- Do not use beyond rated life
- Do not turn on lamp until fully installed

⚠ CAUTION

Risk of burn

- Allow lamp to cool before handling
- Do not turn on lamp until fully installed

Lamp may shatter and cause injury if broken

- Do not use lamp if outer glass is scratched or broken
- Dispose of lamp in a closed container
- Do not use excessive force when installing lamp

Notes

- ARC tube fill gas contains Kr85

121 – QMH S-rated

⚠ WARNING

Risk of electric shock

- Turn power off before inspection, installation or removal
- Do not use where directly exposed to water or outdoors without an enclosed fixture

Risk of fire

- Keep combustible materials away from lamp
- Use in fixture rated for this product

A damaged lamp emits UV radiation which may cause eye/skin injury

- Turn power off if glass bulb is broken. Remove and dispose of lamp.

Unexpected lamp rupture may cause injury, fire, or property damage

- Do not exceed rated voltage
- Do not use where directly exposed to water or outdoors without an enclosed fixture
- Use in enclosed fixture rated for this product—see instructions
- Do not use lamp if outer glass is scratched or broken
- Use only properly rated ballast
- Operate lamp only in specified position
- Turn lamp off at least once for 15 minutes per week

Warning and Caution Notices (continued)

- Do not store flammable materials near/below lamp
- Do not use beyond rated life
- If used on a dimming system, see instructions
- Do not turn on lamp until fully installed

⚠ CAUTION

Risk of burn

- Allow lamp to cool before handling
- Do not turn on lamp until fully installed

Lamp may shatter and cause injury if broken

- Wear safety glasses and gloves when handling lamp
- Do not use lamp if outer glass is scratched or broken
- Dispose of lamp in a closed container
- Do not use excessive force when installing lamp

122 – QMH S-rated Kr85

⚠ WARNING

Risk of electric shock

- Turn power off before inspection, installation or removal
- Do not use where directly exposed to water or outdoors without an enclosed fixture

Risk of fire

- Keep combustible materials away from lamp
- Use in fixture rated for this product

A damaged lamp emits UV radiation which may cause eye/skin injury

- Turn power off if glass bulb is broken. Remove and dispose of lamp.

Unexpected lamp rupture may cause injury, fire, or property damage

- Do not exceed rated voltage
- Do not use where directly exposed to water or outdoors without an enclosed fixture
- Use in enclosed fixture rated for this product—see instructions
- Do not use lamp if outer glass is scratched or broken
- Use only properly rated ballast
- Operate lamp only in specified position
- Turn lamp off at least once for 15 minutes per week
- Do not store flammable materials near/below lamp
- Do not use beyond rated life
- If used on a dimming system, see instructions
- Do not turn on lamp until fully installed

⚠ CAUTION

Risk of burn

- Allow lamp to cool before handling
- Do not turn on lamp until fully installed

Lamp may shatter and cause injury if broken

- Do not use lamp if outer glass is scratched or broken
- Dispose of lamp in a closed container
- Do not use excessive force when installing lamp

Notes

- ARC tube fill gas contains Kr85

123 – QMH S-rated Saf-T-Gard®

⚠ WARNING

Risk of electric shock

- Turn power off before inspection, installation or removal
- Do not use where directly exposed to water or outdoors without an enclosed fixture

Risk of fire

- Keep combustible materials away from lamp
- Use in fixture rated for this product

Unexpected lamp rupture may cause injury, fire, or property damage

- Do not exceed rated voltage
- Do not use where directly exposed to water or outdoors without an enclosed fixture
- Use in enclosed fixture rated for this product—see instructions
- Do not use lamp if outer glass is scratched or broken
- Use only properly rated ballast
- Operate lamp only in specified position
- Turn lamp off at least once for 15 minutes per week
- Do not store flammable materials near/below lamp
- Do not use beyond rated life
- Do not turn on lamp until fully installed

⚠ CAUTION

Risk of burn

- Allow lamp to cool before handling
- Do not turn on lamp until fully installed

Lamp may shatter and cause injury if broken

- Do not use lamp if outer glass is scratched or broken
- Dispose of lamp in a closed container
- Do not use excessive force when installing lamp

124 – Sport 1000W PAR64

⚠ WARNING

Risk of electric shock

- Turn power off before inspection, installation or removal
- Do not use where directly exposed to water or outdoors without an enclosed fixture

Risk of fire

- Keep combustible materials away from lamp
- Use in fixture rated for this product

A damaged lamp emits UV radiation which may cause eye/skin injury

- Turn power off if glass bulb is broken. Remove and dispose of lamp.

Unexpected lamp rupture may cause injury, fire, or property damage

- Do not exceed rated voltage
- Do not use where directly exposed to water or outdoors without an enclosed fixture
- Use in enclosed fixture rated for this product
- Do not use lamp if outer glass is scratched or broken
- Use only properly rated ballast
- Operate lamp only in specified position
- Turn lamp off at least once for 15 minutes per week
- Do not turn on lamp until fully installed

Warning and Caution Notices (continued)

⚠ CAUTION

Risk of burn

- Allow lamp to cool before handling
- Do not turn on lamp until fully installed

Lamp may shatter and cause injury if broken

- Wear safety glasses and gloves when handling lamp
- Do not use lamp if outer glass is scratched or broken
- Dispose of lamp in a closed container
- Do not use excessive force when installing lamp

Notes

- Operating position is beam horizontal ± 90° only.
- The PAR outer MUST be aligned to the "TOP" as indicated by the lamp marking.
- Burner pinch must be down in horizontal burn position.

125 – Sport MBIL-CSI-CID

⚠ WARNING

Risk of electric shock

- Turn power off before inspection, installation or removal
- Do not use where directly exposed to water or outdoors without an enclosed fixture

Risk of fire

- Keep combustible materials away from lamp
- Use in fixture rated for this product

Lamp emits UV radiation which may cause eye/skin injury

- Avoid exposure of eyes and skin to unshielded lamp

Unexpected lamp rupture may cause injury, fire, or property damage

- Do not exceed rated voltage
- Do not touch glass with bare hands
- Do not use where directly exposed to water or outdoors without an enclosed fixture
- Use in enclosed fixture rated for this product
- Do not use lamp if outer glass is scratched or broken
- Use only properly rated ballast
- Operate lamp only in specified position
- Turn lamp off at least once for 15 minutes per week
- Do not turn on lamp until fully installed

⚠ CAUTION

Risk of burn

- Allow lamp to cool before handling
- Do not turn on lamp until fully installed

Lamp may shatter and cause injury if broken

- Do not use lamp if outer glass is scratched or broken
- Do not use excessive force when installing lamp

Cross-Reference

GE Description	Osram/ Sylvania Description	Philips Description
Order This GE Lamp	If you currently use these lamps	
Standard & Ecolux® HPS Lamps		
Lucalox®	**Lumalux®**	**Ceramalux™**
LU35/MED	LU35/MED	C35S76/M
LU35/D/MED	LU35/D/MED	C35S76/D/M
LU50/MED/ECO	LU50/MED	C50S68/M
LU50/D/MED/ECO	LU50/D/MED	C50S68/M
LU50/H/ECO	LU50/ECO	C50S68/ALTO
LU50/D/H/ECO	LU50/D	C50S68/D
LU70/MED/ECO	LU70/MED	C70S62/M
LU70/D/MED/ECO	LU70/D/MED	C70S62/D/M
LU70/ECO/H/ECO	LU70/ECO	C70S62/ALTO
LU70/ECO/NC	LU70/PLUS/ECO	—
LU70/D/H/ECO	LU70/D	C70S62/D
LU100/MED/ECO	LU100/MED	C100S54/M
LU100/D/MED/ECO	LU100/D/MED	C100S54/D/M
LU100/H/ECO	LU100/ECO	C100S54/ALTO
LU100/ECO/NC	LU100/PLUS/ECO	—
LU100/D/H/ECO	LU100/D	C100S54/D
LU150/MED/ECO	LU150/55/MED	CC150S55/M
LU150/D/MED/ECO	LU150/55/D/MED	C150S55/D/M
LU150/55/H/ECO	LU150/55/ECO	C150S55/ALTO
LU150/ECO/NC	LU150/55/PLUS/ECO	—
LU150/55/D/H/ECO	LU150/55/D	C150S55/D
LU150/100/H/ECO	LU150/100	C150S56/ALTO
LU200/H/ECO	LU200/ECO	C200S66
LU200/ECO/NC	LU200/PLUS/ECO	—
LU250/H/ECO	LU250/ECO	C250S50
LU250/ECO/NC	LU250/PLUS/ECO	—
LU250/D/H/ECO	LU250/D	C250S50/D
LU310	LU310/ECO	C310S67
LU400/H/ECO	LU400/ECO	C400S51
LU400/ECO/NC	LU400/PLUS/ECO	—
LU400/D	LU400/D	C400S51/D
LU750	LU750	—
LU1000/ECO	LU1000	C1000S52
Deluxe High Pressure Sodium Lamps		
Lucalox®		**Ceramalux™**
LU70/DX/MED	—	C70S62/C/M
LU150/DX/MED	—	C150S55/C/M
LU150/55/DX	—	C150S55/C
LU250/DX	—	C250S50/C
LU400/DX	—	C400S51/C
Standby Longlife High Pressure Sodium Lamps		
Lucalox®	**Lumalux®**	**Ceramalux™**
LU70/SBY/XL	LU70/SBY	C70S62/2
LU100/SBY/XL	LU100/SBY	C100S54/2
LU150/55/SBY/XL	LU150/551SBY	C150S55/2
LU200/SBY/XL	LU200/100/SBY	—
LU250/SBY/XL	LU250/SBY	C250S50/2
LU400/SBY/XL	LU400/SBY	C400S51/2
LU1000/SBY/XL	LU1000/SBY	C1000S52/2
Ceramic Metal Halide Lamps		
CMH®	**Powerball®**	**MasterColor®**
CMH20/MR16/830/SP	—	—
CMH20/MR16/830/FL	—	—
CMH20/MR16/830/WFL	—	—
CMH39MR16/930/SP	—	—
CMH39MR16/930/FL	—	—
CMH39MR16/930/WFL	—	—
CMH39MR16/942/SP	—	—
CMH39MR16/942/FL	—	—
CMH39MR16/942/WFL	—	—
CMH20/PAR20/SP	—	—

GE Description	Osram/ Sylvania Description	Philips Description
Order This GE Lamp	If you currently use these lamps	
Ceramic Metal Halide Lamps (continued)		
CMH®	**Powerball®**	**MasterColor®**
CMH20/PAR20/FL	—	—
CMH20/PAR30/SP10	MCP20PAR30LN/U/830/SP	—
CMH20/PAR30/SP15	—	—
CMH20/PAR30/FL25	MCP20PAR30LN/U/830/FL	CDM20/PAR30/L/MFL/3K
CMH39/PAR20/830/SP10	MCP39PAR20/U/830/SP	CDM35/PAR20/M/SP3K
CMH39/PAR20/830/FL30	MCP39PAR20/U/830/FL	CDM35/PAR20/M/FL3K
CMH39/PAR20/NSP4K	—	CDM35/PAR20/M/SP/4K
CMH39/PAR20/FL4K	—	CDM35/PAR20/M/FL/4K
CMH39/PAR30L/830/SP10	MCP39PAR30LN/U/830/SP	CDM35/PAR30L/M/SP
CMH39/PAR30L/830/SP15	—	—
CMH39/PAR30L/830/FL25	MCP39PAR30LN/U/830/FL	CDM35/PAR30L/M/FL
CMH39/PAR30LNS4PK	—	—
CMH39/PAR30L/SP4K	—	—
CMH39/PAR30L/FL4K	—	—
CMH70/PAR30L/830/SP15	MCP70PAR30LN/U/830/SP	CDM70/PAR30L/M/SP
CMH70/PAR30L/830/FL40	MCP70PAR30LN/U/830/FL	CDM70/PAR30L/M/FL
CMH70/PAR38/830/SP15	MCP70PAR38/U/830/SP	CDM70/PAR38/SP/3K
CMH70/PAR38/830/FL25	MCP70PAR38/U/830/FL	CDM70/PAR38/FL/3K
CMH70/PAR38/830/WFL	MCP70PAR38/U/830/WFL	CDM70/PAR38/WFL/3K
CMH100/PAR38/830/SP15	MCP100PAR38/U/830/SP	CDM100/PAR38/SP/3K
CMH100/PAR38/830/FL25	MCP100PAR38/U/830/FL	CDM100/PAR38/FL/3K
CMH100/PAR38/830/WFL	MCP100PAR38/U/830/WFL	CDM100/PAR38/WFL/3K
CMH70/U/830/MED	MCP70/U/MED/830	MHC70/U/M/3K
CMH70/C/U/830/MED	MCP70/C/U/MED/830	MHC70/C/U/M/3K
CMH100/U/830/MED	MCP100/U/MED/830	MHC100/U/M/3K
CMH100/C/U/830/MED	MCP100/C/U/MED/830	MHC100/C/U/M/3K
CMH70/U/830/MED/O	MCP70/U/MED/830	MHC70/U/MP/3K/ALTO
CMH70/C/U/830/MED/O	MCP70/C/U/MED/830	MHC70/C/U/MP/3K/ALTO
CMH70/U/942/MED/O	MCP70/U/MED/940	MHC70/U/MP/4K/ALTO
CMH70/C/U/942/MED/O	MCP70/C/U/MED/940	MHC70/C/U/MP/4K/ALTO
CMH150/U/830/MED/O	MCP150/U/MED/830	MCH150/U/MP/3K/ALTO
CMH150/C/U/830/MED/O	MCP150/C/U/MED/830	MHC150/C/U/MP/3K/ALTO
CMH150/U/942/MED/O	—	MHC150/U/MP/4K/ALTO
CMH150/C/U/942/MED/O	—	MHC150/C/U/MP/4K/ALTO
CMH20/T/U/830/G12	—	—
CMH39/T/U/830/G12	MC39T6/U/G12/830	CDM35/T6/830
CMH39/TC/U/942/G12	MC39T6/U/G12/940	CDM35/T6/842
CMH70/T/U/830/G12	MC70T6/U/G12/830	CDM70/T6/830
CMH70/T/U/942/G12	MC70T6/U/G12/940	CDM70/T6/942
CMH150/T/U/830/G12	MC150T6/U/G12/830	CDM150/T6/830
CMH150/T/U/942/G12	MC150T6/U/G12/940	CDM150/T6/942
CMH70/TD/830/Rx7s	MC70T6/DE/830	CDM70/TD/830
CMH70/TD/942/Rx7s	—	CDM70/TD/942
CMH150/TD/830/Rx7s	MC150T6/DE/830	CDM150/TD/830
CMH150/TD/942/Rx7s	—	CDM150/TD/942
CMH250/V/PA/O	MCP250/PS/BU only	CDM250/V/O/PS/4K
CMH250C/V/PA/O	MCP250/C/PS/BU only	CDM250/C/V/O/PS/4K
CMH320/V/PA/O	MCP320/PS/BU only	CDM320/V/O/PS/4K
CMH320C/V/PA/O	MCP320/C/PS BU only	CDM320/C/V/O/PS/4K
CMH350/V/PA/O	—	CDM350/V/O/PS/4K
CMH350C/V/PA/O	—	CDM350/C/V/O/PS/4K
CMH400/V/PA/O	—	CDM400/V/O/PS/4K
CMH400C/V/PA/O	—	CDM400/C/V/O/PS/4K
CMH20/T/C/U/830/GU6.5	—	—
CMH39T/U930GU6.5	—	—
CMH39T/U942GU6.5	—	—
CMH20/TC/U/830/G8.5	MC20TC/U/G8.5/830	—
CMH39/TC/U/830/G8.5	MC39TC/U/G8.5/830	CDM35/TC/830
CMH39/TC/U/942/G8.5	MC39TC/U/G8.5/942	CDM35/TC/942
CMH70/TC/U/830/G8.5	MC70TC/U/G8.5/830	CDM70/TC/830
CMH70/TC/U/942/G8.5	MC70TC/U/G8.5/942	CDM70/TC/942
CMH250/U/830/R		CDM250S50/V/O/4K
CMH400/U/830/R		CDM400S51/V/O/4K

Cross-Reference (continued)

GE Description	Osram/ Sylvania Description	Philips Description
Order This GE Lamp	If you currently use these lamps	
Multi-Vapor® PulseArc® Metal Halide Lamps		
PulseArc®	**MetalArc®**	
MXR32C/VBU	–	–
MXR50/U/MED	MP50/U/MED	MH50/U/M
MXR50/C/U/MED	MP50/C/U/MED	MH50/C/U/M
MXR70/U/MED	MH70/U/MED	MHC70/U/M/3K
MXR70/C/U/MED	MH70/C/U/MED	MHC70/C/U/M/3K
MXR70/U/MED/O	MP70/U/MED	MHC70/C/U/M/3K
MXR70/C/U/MED/O	MP70/C/U/MED	MHC70/C/U/M/3K
MXR100/U/MED	M100/U/MRD	MHC100/U/M/3K
MXR100/C/U/MED	MH100/C/U/MED	MHC100/C/U/M/3K
MVR100/U/MED	MH100/U/4K/MED	MHC100/U/M/4K
MVR100/C/U/MED	–	MHC100/C/U/M/4K
MXR100/U/MED/O	MP100/U/MED	MHC100/U/M/3K
MXR100/C/U/MED/O	MP100/C/U/MED	MHC100/C/U/M/3K
MXR150/U/MED	M150/U/MED	MH150/U/M
MXR150/C/U/MED	M150/C/U/MED	MH150/C/U/M
MVR175/VBU/PA	MS175/PS/BU	MS175/BU/PS
MVR175/C/VBU/PA	MS175/C/PS/BU	–
MVR250/VBU/PA	MS250/PS/BU	MS250/BU/PS
MVR250/C/VBU/PA	MS250/C/PS/BU	–
MVR250/HOR/PA	M250/PS/U	–
MVR320/VBU/HO/PA	MS320/PS/BU	MS320/BU/PS
MVR320/C/VBU/HO/PA	MS320/C/PS/BU-HOR	MS320/C/BU/PS
MPR320/VBU/XHO/PA	MP320/350/PS/BU	MP320/BU/PS
MPR320/C/VBU/XHO/PA	MP320/350/C/PS/BU	MP320/C/BU/PS
MVR320/HOR/PA	M320/PS/BU-HOR	MS320/PS/U
MPR350/VBU/PA	MP320/350/PS/BU	MP350/BU/PS
MPR350/C/VBU/PA	MP320/350/C/PS/BU	MP350/C/BU/PS
MPR400/VBU/XHO/PA	MP350/400/PS/BU	MP400/BU/PS
MPR400/C/VBU/XHO/PA	MP350/400/C/PS/BU	MP400/C/BU/PS
MVR400/HOR/PA	M400/PS/U	MS400/HOR/PS
MVR400/HOR/ED28/PA	M400/PS/U/BT28	–
MVR750/VBU/PA	MS750/PS/BU-HOR/BT37	–
MVR750/C/VBU/PA	MS750/C/PS/BU-HOR/BT37	–
MVR1000/BT37/PA	M1000/PS/U/BT37	MS1000/BU/BT37/PS
Multi-Vapor® Standard Metal Halide Lamps		
Multi-Vapor®	**MetalArc®**	
MVR175/U/MED	M175/U/MED	MH175/U/M
MVR175/C/U/MED	M175/C/U/MED	MH175/C/U/M
MVR175/U	M175/U	MH175/U
MVR175/C/U	M175/C/U	MH175/C/U
MVR175/HOR	MS175/HOR	MS175/HOR
MVR175/C/HOR	MS175/C/HOR	MS175/C/HOR
MVR250/U	M250/U	MH250/U
MVR250/C/U	M250/C/U	MH250/C/U
MVR250/SP30/U	M2503K/BU-only	MH250/3K/BU
MVR250/HOR	MS250/HOR	MS250/HOR
MVR250/C/HOR	MS250/C/HOR	MS250/C/HOR
MVR400/U	M400/U	MH400/U
MVR400/C/U	M400/C/U	MH400/C/U
MVR400/SP30/U	MS400/BU	MH400/3K/U
MVR400/VBU	MS400/BU	MS400/BU
MVR400/VBD	MS400/BD	–
MVR400/C/VBU	MS400/C/BU	MS400/C/BU&
MVR400/C/VBD	MS400/C/BD	–
MVR400/HOR	MS400/HOR	MS400/HOR
MVR400/C/HOR	MS400/C/HOR	MS400/C/HOR
MVR400/SP30/HOR	MS400/3K/HOR	–
MPR400/U	MP400/BU	MP400/U
MPR400/VBU	MP400/BU/BD	–
MVR1000/U	M1000/U	MH1000/U
MVR1000/C/U	M1000/C/U	MH1000/C/U

GE Description	Osram/ Sylvania Description	Philips Description
Order This GE Lamp	If you currently use these lamps	
Multi-Vapor® Standard Metal Halide Lamps (continued)		
Multi-Vapor®	**MetalArc®**	
MVR1000/VBU	MS1000/BU	MS1000/BU
MPR1000/VBU/O	MP1000/BU	MP1000/BU
MVR1500/U/SPORTS	M1500/BU-HOR	MH1500BU
MVR250/HOR/PA	MS250/PS/U	–
MVR320/HOR/PA	MS320/PS/BV-HOR	MS320/PS/U
MVR400/HOR/ED28/PA	M400/PS/U/BT28	–
Safety Metal Halide Lamps		
MVT400/C/VBU	MPT400/C/BU	MHT400/C/U
Mercury Vapor Lamps		
HR40/50DX45-46	H45/46DL-40/50/DX	H46DL-40-50/DX
HR75DX43	H43AV-75/DX	H43AV-75/DX
HR100A38/A23	–	–
HR100DX38/A23	H38AV-100/DX	H38MP-100/DX
HR100A38	H38HT-100	H38HT-100
HR100DX38	H38JA-100/DX	H38JA-100/DX
HR100WDX38	H38JA-100/N	–
HR100RFL38	–	–
HR100RDXFL38	H38BP-100/DX	H38BP-100/DX
HR175A39	H39KB-175	H39KB-175
HR175DX39	H39KC-175/DX	H39KC-175/DX
HT175DX39	H39KC-T175/DX	H39KC-T175
HR175WDX39	H39KC-175/N	–
HR175RFL39	–	H39BM-175
HR175RDXFL39	H39BP-175/DX	H39BP-175/DX
HR250A37	H37KB-250	H37KB-250
HR250DX37	H37KC-250/DX	H37KC-250/DX
HR400A33	H33CD-400	H33CD-400
HR400DX33	H33GL-400/DX	H33GL-400/DX
HR400DX33BT	–	–
HT400DX33	H33GL-T400/DX	H33GL-T400/DX
HR400WDX33	H33GL-400/N	–
HR400RDX33	–	H33DN-400/DX
HR400RDXFL33	–	H33FS-400/DX
HR1000DX34	H34GW-1000/DX	H34GW-1000/DX
HR1000A36	H36GV-1000	H36GV-1000
HR1000DX36	H36GW-1000/DX	H36GW-1000/DX

For the most up-to-date product information, see www.gelighting.com.

Notes

Fluorescent Lamps

Lamp Locator (not drawn to scale)

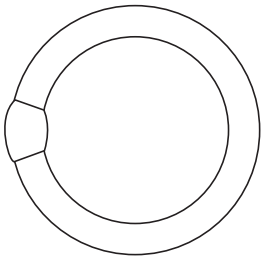

T9 Circline (1-1/8" diameter) 4-Pin Base (G10q)

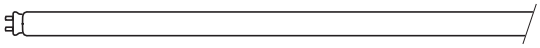

T5 (5/8" diameter) Miniature Bi-Pin Base (G5)

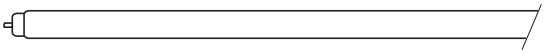

T6 (3/4" diameter) Single Pin Base (Fa8)

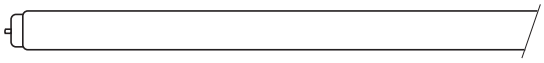

T8 (1" diameter) Single Pin Base (Fa8)

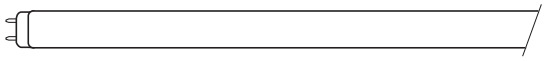

T8 (1" diameter) Medium Bi-Pin Base (G13)

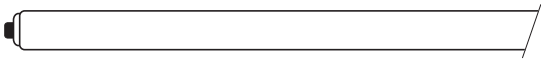

T8 (1" diameter) Recessed Double Contact Base (R17d)

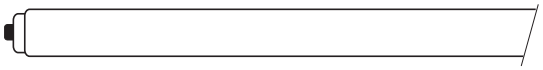

T10 (11/4" diameter) Recessed Double Contact Base (R17d)

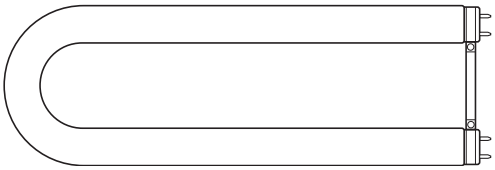

Mod-U-Line® T8/U6 (1" diameter) Medium Bi-Pin Base (G13)

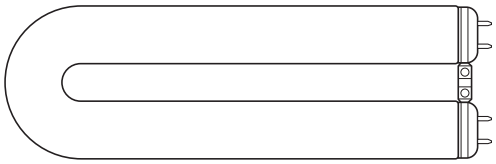

Mod-U-Line® T12/U3 (11/2" diameter) Medium Bi-Pin Base (G13)

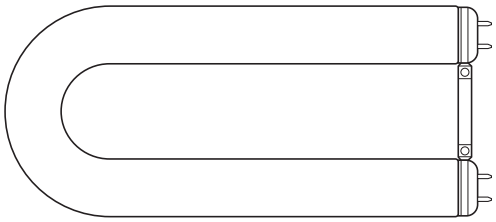

Mod-U-Line® T12/U6 (1-1/2" diameter) Medium Bi-Pin Base (G13)

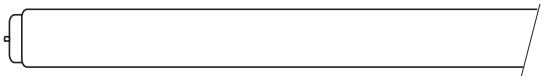

T12 (1-1/2" diameter) Single Pin Base (Fa8)

T12 (1-1/2" diameter) Medium Bi-Pin Base (G13)

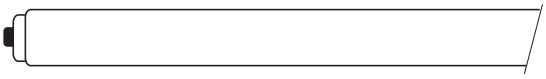

T12 (1-1/2" diameter) Recessed Double Contact Base (R17d)

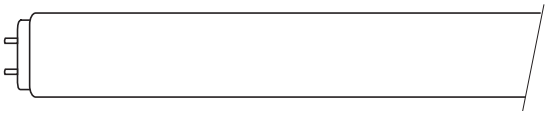

T17 (2-1/8" diameter) Mogul Bi-Pin (G20)

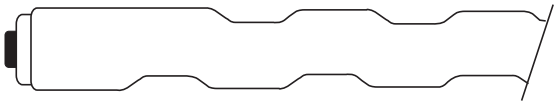

Power Groove® (2-1/8" diameter)
Recessed Double Contact Base (R17d)

Base Identification

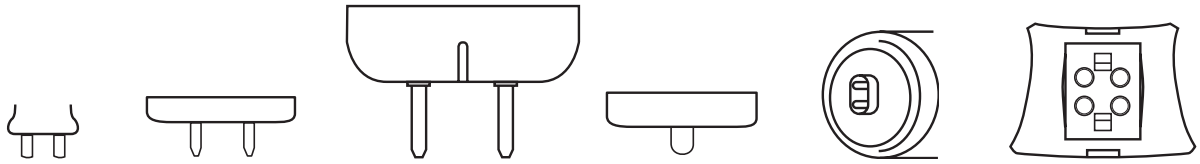

Min BiPin G5 | Med BiPin G13 | Mog BiPin G20 | Single Pin Fa8 | Recessed Double Contact R17d | 4-Pin G10q (Circline)

Introduction

GE introduced the first fluorescent lamp in 1939. Today, these lamps have become almost a universal standard in office and other lighting applications. The characteristics of fluorescent lamps vary widely according to the lamp type. In general, fluorescent lamps have the following advantages:

- **Low Operating Cost:**
  Efficient, fluorescent lamps can cost significantly less to operate over their lifetime than incandescent lamps. Many common linear fluorescent lamps now have energy-saving versions often designated in this catalog by Watt-Miser® (WM).
- **Long Life:**
  Life ratings for fluorescent lamps range from 36,000 to 55,000 hours based on the industry standard of 3 burning hours per start, except where noted.
- **Light Quality:**
  GE Starcoat® T5 and T8 lamps offer higher color rendering and lumen maintenance of 92%-95%.
- **Flexibility:**
  Fluorescent lamps are available in a wide range of sizes, shapes, color performance, and wattage ratings.
- **Fast Starting:**
  Rapid Start and Instant Start lamps typically start within 1 second of being turned on.

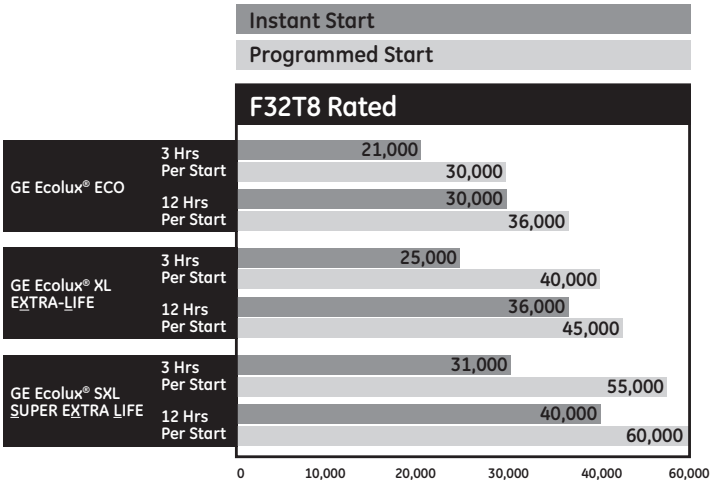

Life ratings are based on engineering data on programmed start ballasts with lamps cycled every 3 operating hours.

GE	OSRAM/SYLVANIA	PHILIPS
Aquarium/Terrarium	—	—
Chroma 50	Design 50®	Colortone 50
covRguard®	—	Tuff Away®
Ecolux®	Ecologic	Alto
Gro & Sho™/Plant & Aquarium	GRO-LUX®	Agro-Lite
Kitchen and Bath ULTRA™	Interior Design® (D30)	Softone Pastel FL (SPEC 30)
Mod-U-Line®	Curvalume®	U-Bent
Power Groove®	—	—
Specification Series (SP)	Designer® Series (D)	SPEC Series
Specification Series (SPX)	Designer® "800" Series	Ultralume™
Starcoat®	—	—
T5	Pentron®	Silhouette™
T8	Octron®	TL70/TL80™
T10/1500MA	VHO/LT	—
/1500	VHO	VHO
Watt-Miser®	SuperSaver®	Econ-o-Watt
Watt-Miser® Plus	SuperSaver Plus®	—
XL	XP	Plus

ATTENTION: This brand-name cross-reference chart is provided only as a quick reference. Other lamp company brand listings may only represent a near equivalent, versus an identical match to GE Lighting brands. Individual lamp manufacturers' performance specifications and product offerings should be consulted. Lamp performance may be affected by environmental conditions, ballast type and/or other auxiliary equipment.

See www.gelighting.com e-Catalog for a comprehensive cross-reference tool.

Product Information

GE T5 Starcoat® Ecolux® Lamps (pg 4-8)

- Used in a variety of applications from indirect fixtures in commercial office buildings to warehouses and manufacturing facilities
- Many combinations of wattage and length provide flexibility of fixture design and ceiling layout
- Longer rated life at 30,000 hours
- TCLP compliant, lowering disposal costs where applicable (state regulations vary, consult your state EPA)

GE Ultra Energy Saving T5 Lamps (pg 4-8 to 4-9)

- High Output Watt-Miser®: Over 5% energy savings versus standard Starcoat® T5 HO lamps. Same lumen output. Great for use in high-bay systems.
- High Efficiency Watt-Misers®: Over 5% energy savings versus standard Starcoat® T5 HE lamps. Same lumen output. Available in four different lengths.
- High Lumen T5: 5% greater lumen output versus standard Starcoat® F28WT5 lamps. Same wattage. Great for new commercial troffers.
- Excellent color rendering – 85 CRI
- TCLP compliant, lowering disposal costs where applicable (state regulations vary, consult your state EPA).

GE Ultra Energy Saving Ecolux® T5 High Output 47 Watt Watt-Miser® (pg 4-9)

- GE's highest efficiency and lowest wattage T5 HO combination at 102 LPW
- Relamp existing full wattage 54W lamp with the 47W T5 lamp and saves energy
- TCLP compliant, lowering disposal costs where applicable (state regulations vary, consult your state EPA)

GE T8 Starcoat® Ecolux® Lamps (pgs 4-9 to 4-10)

- More light over life – 94-95% lumen maintenance
- Enhanced color rendering...available in 700 and 800 series
- High system efficiency, relative to T12, delivers significant energy cost savings
- TCLP Compliant, lowering disposal costs where applicable (state regulations vary, consult your state EPA)

GE Starcoat® Ecolux® XL Extra-Life and SXL Super Long Life lamps (pgs 4-9 to 4-10)

- Same great features of the T8 Starcoat® Ecolux®...with longer life... up to 67% longer than standard T8 lamps

GE Ultra Energy Saving T8 Lamps 2ft and 3ft T8 Watt-Misers® (pg 4-10 to 4-11)

- Energy-saving alternative to standard 2ft and 3ft T8 lamps. Up to 12% energy savings versus standard F17T8 and/or F25T8 lamps, with approximately 10% light loss.
- Excellent color rendering – 80+ CRI
- TCLP compliant, lowering disposal costs where applicable (state regulations vary, consult your state EPA).

GE Ultra Energy Saving T8 Lamps 4ft T8 25 Watt Lamp (pg 4-11)

- Lowest wattage 4ft T8 currently available.
- Longer rated life at 50,000 hours depending on ballast type and burn cycle
- Operates on any ANSI compliant T8 Instant Start or Programmed Start ballast; also approved on GE UltraStart® PRS ballast
- Excellent color rendering – 80+ CRI
- TCLP compliant, lowering disposal costs where applicable (state regulations vary, consult your state EPA)
- Approximately 10% less light

GE Ultra Energy Saving T8 Lamps T8 28W UltraMax® (pg 4-11)

- Highly efficient T8 system utilizing the new 28W T8 lamp designed for optimal use on the GE UltraMax® ballast product family
- Operates on any ANSI compliant T8 Instant Start or Programmed Start ballast
- Also approved for use on GE UltraStart® PRS ballast
- 80+ CRI (Color Rendering Index) and TCLP compliant
- Approximately 4% less light

GE Ultra Energy Saving T8 Lamps T8 32W High Lumen Lamps (HL) (pg 4-11)

- 5-8% more lumens than GE 32W T8 SP and SPX
- 3100 initial lumens allows you to increase light levels over a standard T8 or the option to implement a de-lamp or de-fixture strategy
- 33% longer life over GE F32T8
- 80+ CRI (Color Rendering Index) and TCLP compliant

GE 8' T8 Lamps (pg 4-11 to 4-12)

- Single-pin based lamps designed to operate on Instant Start Ballast

GE 8' T8 Watt-Miser® Plus and 49W Energy Saving Lamps (pg 4-11)

- One of the most efficient fluorescent products available, up to 107 LPW
- Energy savings...8.5% to 17% less energy consumed than standard F96T8 lamps
- Watt-Miser® Plus has same light output as standard lamps; 49W is approximately 14% less light
- Excellent color rendering — 80+ CRI
- Watt-Miser® Plus lamp reduces wattage to 54W per lamp

GE 8' T8 High Output Lamps (pg 4-12)

- High system efficiency delivers 38% energy cost savings
- 50% longer life than T12 high output lamps
- Wide choice of color options
- Operate at 400mA

Product Information (continued)

GE T8 Mod-U-Line® U-Shaped Fluorescent Lamps (pg 4-12)

- Primarily used in 2x2 fixtures with prismatic or parabolic lenses
- Lower energy cost…36% energy cost savings vs. F40T12 U-Tubes
- New Watt-Miser® version saves even more money!
- Longer lamp life than T12 Mod-U-Line® – 20,000 hours
- 700 and 800 Series

GE Energy Saving Mod-U-Line® U-Shaped Fluorescent Lamps (pg 4-12)

- Primarily used in 2x2 fixtures with prismatic or parabolic lenses
- Relamp existing F31T8 Mod-U-Line® with F29T8 or F26T8 Mod-U-Line® and save up to 16% in energy
- Longer lamp life than T12 Mod-U-Line® – 24,000 hours
- Approximately 8 to 17% less light

GE 4' T12 Watt-Miser® Ecolux® Energy Saving Lamps (WM) (pg 4-14)

- Energy-saving replacement for all standard T12 fluorescent lamps
- 12% to 20% savings in energy costs vs. standard fluorescent with approximately 15% light loss
- TCLP compliant, lowering disposal costs where applicable (state and local regulations vary, consult your state EPA)

GE T12 High Output Lamps (pg 4-15 to 4-16)

- High light output and long life
- Produces about 45% more initial lumens than standard lamps of the same size
- Usually operated at 800mA

GE T12 Very High Output Lamps (pg 4-16)

- Where high light levels are required – factories, warehouses, gymnasiums, open areas
- Rapid Start, operated at 1500mA

covRguard® Shatter Resistant Fluorescent Lamps (pg 4-17)

- Polycarbonate shield helps to contain shattered glass particles if lamp is broken, protecting people, food and other valuable items
- UV-blocking properties guard against fading and UV degradation
- Available in a variety of colors for decorative and architectural applications

GE Cold-Temperature Lamps (pg 4-19)

- Specifically designed for cold-temperature applications such as freezers and coolers, display cases and outdoor areas
- Available in T5, T8, T10 and T12 versions
- Rated nominal watts and initial lumens are peak values. Actual watt and lumen values may be somewhat lower in service, depending on ambient conditions.

GE Appliance Lamps (pg 4-20)

- Designed for intermittent service in appliances such as oven hoods and microwaves

GE Blacklight/Blacklight Blue Lamps (pg 4-20)

- Blacklight (BL) lamps are commonly used in insect traps
- Blacklight Blue (BLB) lamps are often used decoratively in disco lighting and theatrical applications. These lamps are produced with a special dark blue glass that filters most visible light.

GE Gold Lamps (pg 4-21)

- Effectively blocks all UV emissions below 520nm
- Available in covRguard®
- Used in photo-sensitive applications such as semi-conductor assembly and darkrooms

GE Germicidal Lamps (pg 4-21)

- Clear lamps with special UV transmitting glass
- The 254nm radiation from appropriately designed and installed devices using the lamps can inactivate many forms of bacteria and other organisms
- Used in air, water and surface purification devices

Headings in this catalog section

The following terms and descriptions can help you when checking Fluorescent lamp specifications and when ordering products. Within each product line, lamps are divided into families, within these families, lamps are then listed by wattage, then bulb, and then by base. There are exceptions to this ordering among the specialty lamps listed.

Order Code:
It is important to use this five-digit code when ordering to ensure that you receive the exact product you require.

Nominal Length (in):
Lamp length including base and/or pins.

Watts:
Energy used (as defined by FTC Lamp Label Rules). To estimate energy consumption (kWh), multiply watts x hours of use and divide by 1000.

Bulb Shape:
Bulb shape followed by its size (the maximum diameter of the bulb expressed in eighths of an inch).

Base:
The type of base.

Description:
The lamp's identification code.

Case Quantity:
Number of product units packed in a case.

Rated Life – Hours:
Lamp burning hours to median life expectancy.

Initial Lumens:
Lamp light output after the initial 100 hours of operation.

Mean Lumens:
Lamp light output at 40% of rated lamp life or 8K hours for lamps exceeding 20K hours life.

Color Temperature Kelvins (K):
A measure of the visual "warmth" or "coolness" of the light from the lamp. The higher the value, the whiter or "cooler" the light appears.

Color Rendering Index (CRI or R_a):
An indication of the ability of the lamp to render object colors in a normal, natural way. The higher the number (0-100), the better the color appearance.

High Color Rendering:
Indicates that this is a lamp with high color rendering, which helps objects and persons illuminated to appear more true to life.

Reduced Wattage:
Indicates that this is a reduced wattage option for lamps normally used in this application. Be sure to check wattage, lumens and life to determine which lamp is best suited to your needs.

Footnotes:
Related footnotes, see page 4-26

Warning and Caution Notices:
See page 4-27 for more information.

Additional Information:
Typical application and/or other important information.

Bulb Shape	Base	Watts	Nominal Length (in)	Order Code	Description	Case Qty	Rated Life (3hr/ Start)	Rated Life (12hr/ Start)	Initial Lumens	Mean Lumens	Color Temp K	CRI	High Color Rendering	Energy Savings	Reduced Wattage	Footnotes	Warning and Caution Notices	Additional Information
T5 Starcoat Ecolux® Lamps																		
High Efficiency																		
T5	Miniature Bi-Pin (G5)	14	21.6	31590	F14W/T5/830/ECO	40	30000	36000	1350	1240	3000	85	✐			19	101	

F 14W/T5/830 / ECO

- F — Identifies as Fluorescent lamp.
- 14W — Identifies either the lamp's wattage or its length in inches.
- T5 — Identifies the lamp shape and the bulb diameter in eighths of an inch.
- 830 — Identifies the lamp finish or color.
- ECO — Identifies TCLP compliance.

WHEN YOU DON'T KNOW THE LAMP DESCRIPTION

1. Identify bulb shape by using table on page 4-3.
2. Measure bulb diameter using ruler in Appendix section page D-1 to determine width in eighths of an inch.
3. Identify base type using table on page 4-4.
4. Find your lamp in the table containing the bulb shape, size and base.

Fluorescent Lamps

Bulb Shape	Base	Watts	Nominal Length (in)	Order Code	Description	Case Qty	Rated Life (3hr/ Start)	Rated Life (12hr/ Start)	Initial Lumens	Mean Lumens	Color Temp K	CRI	High Color Rendering	Energy Savings	Reduced Wattage	Footnotes	Warning and Caution Notices	Additional Information
T5 Starcoat® Ecolux® Lamps																		
T5 High Efficiency																		
T5	Miniature Bi-Pin (G5)	14	21.6	31590	F14W/T5/830/ECO	40	30000	36000	1350	1240	3000	85	✐			19	101	
		14	21.6	46671	F14W/T5/835/ECO	40	30000	36000	1350	1240	3500	85	✐			19	101	
		14	21.6	46673	F14W/T5/841/ECO	40	30000	36000	1350	1240	4100	85	✐			19	101	
		14	21.6	46674	F14W/T5/850/ECO	40	30000	36000	1300	1190	5000	85	✐			19	101	
		14	21.6	46676	F14W/T5/865/ECO	40	30000	36000	1250	1150	6500	85	✐			19	101	
		21	33.4	46677	F21W/T5/830/ECO	40	30000	36000	2100	1930	3000	85	✐			19	101	
		21	33.4	46684	F21W/T5/835/ECO	40	30000	36000	2100	1930	3500	85	✐			19	101	
		21	33.4	46687	F21W/T5/841/ECO	40	30000	36000	2100	1930	4100	85	✐			19	101	
		21	33.4	46688	F21W/T5/850/ECO	40	30000	36000	2000	1840	5000	85	✐			19	101	
		21	33.4	46689	F21W/T5/865/ECO	40	30000	36000	1950	1790	6500	85	✐			19	101	
		28	45.2	46704	F28W/T5/830/ECO	40	30000	36000	2900	2660	3000	85	✐			19	101	
		28	45.2	46705	F28W/T5/835/ECO	40	30000	36000	2900	2660	3500	85	✐			19	101	
		28	45.2	46706	F28W/T5/841/ECO	40	30000	36000	2900	2660	4100	85	✐			19	101	
		28	45.2	46707	F28W/T5/850/ECO	40	30000	36000	2750	2530	5000	85	✐			19	101	
		28	45.2	46708	F28W/T5/865/ECO	40	30000	36000	2700	2480	6500	85	✐			19	101	
		35	57.1	46724	F35W/T5/830/ECO	40	30000	36000	3650	3350	3000	85	✐			19	101	
		35	57.1	46727	F35W/T5/835/ECO	40	30000	36000	3650	3350	3500	85	✐			19	101	
		35	57.1	46735	F35W/T5/841/ECO	40	30000	36000	3650	3350	4100	85	✐			19	101	
		35	57.1	46742	F35W/T5/850/ECO	40	30000	36000	3500	3220	5000	85	✐			19	101	
		35	57.1	46743	F35W/T5/865/ECO	40	30000	36000	3400	3120	6500	85	✐			19	101	
T5 High Output																		
T5	Miniature Bi-Pin (G5)	24	21.6	46699	F24W/T5/830/ECO	40	30000	36000	2000	1840	3000	85	✐			19	101	
		24	21.6	46700	F24W/T5/835/ECO	40	30000	36000	2000	1840	3500	85	✐			19	101	
		24	21.6	46701	F24W/T5/841/ECO	40	30000	36000	2000	1840	4100	85	✐			19	101	
		24	21.6	46702	F24W/T5/850/ECO	40	30000	36000	1900	1740	5000	85	✐			19	101	
		24	21.6	46703	F24W/T5/865/ECO	40	30000	36000	1880	1740	6500	85	✐			19	101	
		39	33.4	46744	F39W/T5/830/ECO	40	30000	36000	3500	3220	3000	85	✐			19	101	
		39	33.4	46745	F39W/T5/835/ECO	40	30000	36000	3500	3220	3500	85	✐			19	101	
		39	33.4	46746	F39W/T5/841/ECO	40	30000	36000	3500	3220	4100	85	✐			19	101	
		39	33.4	46747	F39W/T5/850/ECO	40	30000	36000	3350	3080	5000	85	✐			19	101	
		39	33.4	46748	F39W/T5/865/ECO	40	30000	36000	3330	3060	6500	85	✐			19	101	
		54	45.2	46759	F54W/T5/830/ECO	40	30000	36000	5000	4600	3000	85	✐			19	101	
		54	45.2	46760	F54W/T5/835/ECO	40	30000	36000	5000	4600	3500	85	✐			19	101	
		54	45.2	46761	F54W/T5/841/ECO	40	30000	36000	5000	4600	4100	85	✐			19	101	
		54	45.2	46762	F54W/T5/850/ECO	40	30000	36000	4800	4410	5000	85	✐			19	101	
		54	45.2	46763	F54W/T5/865/ECO	40	30000	36000	4750	4370	6500	85	✐			19	101	
		80	57.1	46802	F80W/T5/830/ECO	40	30000	36000	7000	6440	3000	85	✐			19	101	
		80	57.1	46803	F80W/T5/835/ECO	40	30000	36000	7000	6440	3500	85	✐			19	101	
		80	57.1	46804	F80W/T5/841/ECO	40	30000	36000	7000	6440	4100	85	✐			19	101	
		80	57.1	46805	F80W/T5/850/ECO	40	30000	36000	6700	6160	5000	85	✐			19	101	
		80	57.1	46806	F80W/T5/865/ECO	40	30000	36000	6650	6110	6500	85	✐			19	101	
T5 High Output Extra-Life																		
T5	Miniature Bi-Pin (G5)	54	45	68836	F54T5/XL/830/ECO	40	50000	60000	5000	4600	3000	84	✐			19	101	
		54	45	68837	F54T5/XL/835/ECO	40	50000	60000	5000	4600	3500	84	✐			19	101	
		54	45	68838	F54T5/XL/841/ECO	40	50000	60000	5000	4600	4100	84	✐			19	101	
		54	45	68839	F54T5/XL/850/ECO	40	50000	60000	4800	4410	5000	84	✐			19	101	
		54	45	68840	F54T5/XL/865/ECO	40	50000	60000	4750	4370	6500	84	✐			19	101	
Ultra Energy Saving T5 Lamps																		
T5 High Efficiency Watt-Miser®																		
T5	Miniature Bi-Pin (G5)	13	21.6	71632	F14T5/830/WM/ECO	40	25000	30000	1350	1240	3000	85	✐	$	✈	19	101	
		13	21.6	71633	F14T5/835/WM/ECO	40	25000	30000	1350	1240	3500	85	✐	$	✈	19	101	
		13	21.6	71634	F14T5/841/WM/ECO	40	25000	30000	1350	1240	4100	85	✐	$	✈	19	101	
		13	21.6	71635	F14T5/850/WM/ECO	40	25000	30000	1300	1190	5000	85	✐	$	✈	19	101	
		13	21.6	71636	F14T5/865/WM/ECO	40	25000	30000	1250	1150	6500	85	✐	$	✈	19	101	
		20	33.4	71637	F21T5/830/WM/ECO	40	25000	30000	2100	1930	3000	85	✐	$	✈	19	101	
		20	33.4	71638	F21T5/835/WM/ECO	40	25000	30000	2100	1930	3500	85	✐	$	✈	19	101	
		20	33.4	71639	F21T5/841/WM/ECO	40	25000	30000	2100	1930	4100	85	✐	$	✈	19	101	
		20	33.4	71640	F21T5/850/WM/ECO	40	25000	30000	2000	1840	5000	85	✐	$	✈	19	101	
		20	33.4	71641	F21T5/865/WM/ECO	40	25000	30000	1950	1790	6500	85	✐	$	✈	19	101	
		26	45.2	71642	F28T5/830/WM/ECO	40	25000	30000	2900	2660	3000	85	✐	$	✈	19	101	
		26	45.2	71643	F28T5/835/WM/ECO	40	25000	30000	2900	2660	3500	85	✐	$	✈	19	101	
		26	45.2	71644	F28T5/841/WM/ECO	40	25000	30000	2900	2660	4100	85	✐	$	✈	19	101	

For the most up-to-date product information, see www.gelighting.com. To convert inches to millimeters, multiply by 25.4.
All footnotes, warning and caution notices found at the end of this section (page 4-26).

Bulb Shape	Base	Watts	Nominal Length (in)	Order Code	Description	Case Qty	Rated Life (3hr/ Start)	Rated Life (12hr/ Start)	Initial Lumens	Mean Lumens	Color Temp K	CRI	High Color Rendering	Energy Savings	Reduced Wattage	Footnotes	Warning and Caution Notices	Additional Information
Ultra Energy Saving T5 Lamps (continued)																		
T5 High Efficiency Watt-Miser® (continued)																		
T5	Miniature Bi-pin (G5)	26	45.2	71645	F28T5/850/WM/ECO	40	25000	30000	2750	2530	5000	85	✐	$	☛	19	101	
		26	45.2	71646	F28T5/865/WM/ECO	40	25000	30000	2700	2480	6500	85	✐	$	☛	19	101	
		33	57.1	71647	F35T5/830/WM/ECO	40	25000	30000	3650	3350	3000	85	✐	$	☛	19	101	
		33	57.1	71648	F35T5/835/WM/ECO	40	25000	30000	3650	3350	3500	85	✐	$	☛	19	101	
		33	57.1	71649	F35T5/841/WM/ECO	40	25000	30000	3650	3350	4100	85	✐	$	☛	19	101	
		33	57.1	71650	F35T5/850/WM/ECO	40	25000	30000	3500	3220	5000	85	✐	$	☛	19	101	
		33	57.1	71651	F35T5/865/WM/ECO	40	25000	30000	3400	3120	6500	85	✐	$	☛	19	101	
T5 High Output Watt-Miser®																		
T5	Miniature Bi-Pin (G5)	51	45.2	71627	F54T5/830/WM/ECO	40	30000	36000	5000	4600	3000	85	✐	$	☛	19	101	
		51	45.2	71628	F54T5/835/WM/ECO	40	30000	36000	5000	4600	3500	85	✐	$	☛	19	101	
		51	45.2	71629	F54T5/841/WM/ECO	40	30000	36000	5000	4600	4100	85	✐	$	☛	19	101	
		51	45.2	71630	F54T5/850/WM/ECO	40	30000	36000	4790	4410	5000	85	✐	$	☛	19	101	
		51	45.2	71631	F54T5/865/WM/ECO	40	30000	36000	4750	4370	6500	85	✐	$	☛	19	101	
T5 High Output 47W Watt-Miser®																		
T5	Miniature Bi-Pin (G5)	47	45.2	62020	F54T5/47W/830/ECO	40	30000	36000	4800	4410	3000	84	✐	$	☛	19	101	
		47	45.2	62021	F54T5/47W/835/ECO	40	30000	36000	4800	4410	3500	84	✐	$	☛	19	101	
		47	45.2	62022	F54T5/47W/841/ECO	40	30000	36000	4800	4410	4100	84	✐	$	☛	19	101	
		47	45.2	62023	F54T5/47W/850/ECO	40	30000	36000	4600	4230	5000	84	✐	$	☛	19	101	
		47	45.2	62024	F54T5/47W/865/ECO	40	30000	36000	4550	4180	6500	84	✐	$	☛	19	101	
T5 High Lumen																		
T5	Miniature Bi-Pin (G5)	28	45.2	71652	F28WT5/830/HL/ECO	40	20000	24000	3050	2810	3000	85	✐	$		19	101	
		28	45.2	71653	F28WT5/835/HL/ECO	40	20000	24000	3050	2810	3500	85	✐	$		19	101	
		28	45.2	71654	F28WT5/841/HL/ECO	40	20000	24000	3050	2810	4100	85	✐	$		19	101	
		28	45.2	71655	F28WT5/850/HL/ECO	40	20000	24000	2900	2670	5000	85	✐	$		19	101	
		28	45.2	71656	F28WT5/865/HL/ECO	40	20000	24000	2850	2620	6500	85	✐	$		19	101	
T5 Preheat Lamps																		
6" T5																		
T5	Miniature Bi-Pin (G5)	4	6.0	10004	F4T5/CW	24	5000		135	100	4100	60					101	
		4	6.0	15983	F4T5/CW/CB	10	5000		135	100	4100	60					101	
		4	6.0	29089	F4T5/WW/CB	10	5000		140	105	3000	52					101	
9" T5																		
T5	Miniature Bi-Pin (G5)	6	9.0	10032	F6T5/CW	24	5000		295	235	4100	60					101	
		6	9.0	15986	F6T5/CW/CB	10	5000		295	235	4100	60					101	
		6	9.0	90062	F6T5/XL/CW	24	8000		260	210	4100	60					101	
		6	9.0	10028	F6T5/D	24	5000		230	185	6500	75					101	
12" T5																		
T5	Miniature Bi-Pin (G5)	8	12.0	10059	F8T5/CW	24	5000		400	320	4100	60					101	
		8	12.0	15987	F8T5/CW/CB	10	5000		400	320	4100	60					101	
		8	12.0	90063	F8T5/XL/CW	24	8000		400	320	4100	60					101	
		8	12.0	10055	F8T5/D	24	5000		330	265	6500	75					101	
		8	12.0	10064	F8T5/WW	24	5000		410	330	3000	52					101	
		8	12.0	25425	F8T5/WW/CB	5	5000		410	330	3000	52					101	
21" T5																		
T5	Miniature Bi-Pin (G5)	13	21.0	10086	F13T5/CW	24	5000		850	705	4100	60					101	
		13	21.0	49333	F13T5/CW/CB	5	5000		850	705	4100	60					101	
		13	21.0	90064	F13T5/XL/CW	24	8000		830	690	4100	60					101	
		13	21.0	10089	F13T5/WW	24	5000		870	720	3000	52					101	
		13	21.0	25426	F13T5/WW/CB	5	5000		870	720	3000	52					101	
T8 Starcoat® Lamps																		
2' T8 Ecolux®																		
T8	Medium Bi-Pin (G13)	17	24.0	45741	F17T8/SP30/ECO	24	30000	36000	1325	1260	3000	78				18,20	101	
		17	24.0	45743	F17T8/SP35/ECO	24	30000	36000	1325	1260	3500	78				18,20	101	
		17	24.0	45748	F17T8/SP41/ECO	24	30000	36000	1325	1260	4100	78				18,20	101	
		17	24.0	45742	F17T8/SPX30/ECO	24	30000	36000	1350	1280	3000	85	✐			18,20	101	
		17	24.0	45747	F17T8/SPX35/ECO	24	30000	36000	1350	1280	3500	85	✐			18,20	101	
		17	24.0	45749	F17T8/SPX41/ECO	24	30000	36000	1350	1280	4100	85	✐			18,20	101	
2' T8 Ecolux® XL Extra-life																		
T8	Medium Bi-Pin (G13)	17	24.0	15476	F17T8/XL/SP30/ECO	24	40000	45000	1325	1260	3000	78				18,20	101	
		17	24.0	15479	F17T8/XL/SP35/ECO	24	40000	45000	1325	1260	3500	78				18,20	101	
		17	24.0	15480	F17T8/XL/SP41/ECO	24	40000	45000	1325	1260	4100	78				18,20	101	
		17	24.0	15481	F17T8/XL/SPX30/ECO	24	40000	45000	1350	1280	3000	85	✐			18,20	101	

For the most up-to-date product information, see www.gelighting.com. To convert inches to millimeters, multiply by 25.4.
All footnotes, warning and caution notices found at the end of this section (page 4-26).

Bulb Shape	Base	Watts	Nominal Length (in)	Order Code	Description	Case Qty	Rated Life (3hr/ Start)	Rated Life (12hr/ Start)	Initial Lumens	Mean Lumens	Color Temp K	CRI	High Color Rendering	Energy Savings	Reduced Wattage	Footnotes	Warning and Caution Notices	Additional Information
T8 Starcoat® Lamps (continued)																		
2' T8 Ecolux® XL Extra-life (continued)																		
T8	Medium Bi-Pin (G13)	17	24.0	15483	F17T8/XL/SPX35/ECO	24	40000	45000	1350	1280	3500	85	✐			18,20	101	
		17	24.0	15484	F17T8/XL/SPX41/ECO	24	40000	45000	1350	1280	4100	85	✐			18,20	101	
		17	24.0	10415	F17T8/XL/SPX50/ECO	24	40000	45000	1300	1235	5000	82	✐			18,20	101	
		17	24.0	16092	F17T8/XL/SPX65/ECO	24	40000	45000	1250	1125	6500	78	✐			18,20	101	
2' T8 Ecolux® 17 Watt Super Long Life																		
T8	Medium Bi-Pin (G13)	17	24.0		F17T8/SXL/SPX35/ECO	24	55000	57000			3500	85	✐			18, 21	101	
		17	24.0		F17T8/SXL/SPX41/ECO	24	55000	57000			4100	85	✐			18, 21	101	
		17	24.0		F17T8/SXL/SPX50/ECO	24	55000	57000			5000	82	✐			18, 21	101	
3' T8 Ecolux®																		
T8	Medium Bi-Pin (G13)	25	36.0	45750	F25T8/SP30/ECO	24	30000	36000	2080	1970	3000	78				18,20	101	
		25	36.0	45754	F25T8/SP35/ECO	24	30000	36000	2080	1970	3500	78				18,20	101	
		25	36.0	45756	F25T8/SP41/ECO	24	30000	36000	2080	1970	4100	78				18,20	101	
		25	36.0	45753	F25T8/SPX30/ECO	24	30000	36000	2150	2040	3000	85	✐			18,20	101	
		25	36.0	45755	F25T8/SPX35/ECO	24	30000	36000	2150	2040	3500	85	✐			18,20	101	
		25	36.0	45757	F25T8/SPX41/ECO	24	30000	36000	2150	2040	4100	85	✐			18,20	101	
3' T8 Ecolux® XL Extra-life																		
T8	Medium Bi-Pin (G13)	25	36.0	15486	F25T8/XL/SP30/ECO	24	40000	45000	2080	1970	3000	78				18,20	101	
		25	36.0	15487	F25T8/XL/SP35/ECO	24	40000	45000	2080	1970	3500	78				18,20	101	
		25	36.0	15488	F25T8/XL/SP41/ECO	24	40000	45000	2080	1970	4100	78				18,20	101	
		25	36.0	15489	F25T8/XL/SPX30/ECO	24	40000	45000	2150	2040	3000	85	✐			18,20	101	
		25	36.0	15490	F25T8/XL/SPX35/ECO	24	40000	45000	2150	2040	3500	85	✐			18,20	101	
		25	36.0	15491	F25T8/XL/SPX41/ECO	24	40000	45000	2150	2040	4100	85	✐			18,20	101	
		25	36.0	10416	F25T8/XL/SPX50/ECO	24	40000	45000	2050	1950	5000	82	✐			18,20	101	
		25	36.0	16314	F25T8/XL/SPX65/ECO	24	40000	45000	1950	1755	6500	78	✐			18,20	101	
3' T8 Ecolux® 25 Watt Super Long Life																		
T8	Medium Bi-Pin (G13)	25	36.0		F25T8/SXL/SPX35/ECO	24	55000	57000			3500	85	✐			18, 21	101	
		25	36.0		F25T8/SXL/SPX41/ECO	24	55000	57000			4100	85	✐			18, 21	101	
		25	36.0		F25T8/SXL/SPX50/ECO	24	55000	57000			5000	82	✐			18, 21	101	
4' T8 Ecolux®																		
T8	Medium Bi-Pin (G13)	32	48.0	66347	F32T8/SPP30/ECO	36	30000	36000	2900	2725	3000	80	✐			18,21	101	
		32	48.0	66348	F32T8/SPP35/ECO	36	30000	36000	2900	2725	3500	80	✐			18,21	101	
		32	48.0	66349	F32T8/SPP41/ECO	36	30000	36000	2900	2725	4100	80	✐			18,21	101	
		32	48.0	66350	F32T8/SPP50/ECO	36	30000	36000	2900	2725	5000	80	✐			18,21	101	
		32	48	66351	F32T8/SPP65/ECO	36	30000	36000	2900	2725	6500	78	✐			18,21	101	
		32	48.0	68850	F32T8/SPX30/ECO2	36	30000	36000	2925	2770	3000	85	✐			18,21	101	
		32	48.0	68851	F32T8/SPX35/ECO2	36	30000	36000	2925	2770	3500	85	✐			18,21	101	
		32	48.0	68852	F32T8/SPX41/ECO2	36	30000	36000	2925	2770	4100	85	✐			18,21	101	
		32	48.0	68853	F32T8/SPX50/ECO2	36	30000	36000	2900	2755	5000	82	✐			18,21	101	
		32	48.0	66342	F32T8/SPX65/ECO2	36	30000	36000	2900	2755	6500	78	✐			18,21	101	
4' T8 Ecolux® XL Extra-life																		
T8	Medium Bi-Pin (G13)	32	48.0	68854	F32T8/XL/SPX30/ECO2	36	40000	45000	2925	2770	3000	85	✐			18,21	101	
		32	48.0	68855	F32T8/XL/SPX35/ECO2	36	40000	45000	2925	2770	3500	85	✐			18,21	101	
		32	48.0	68856	F32T8/XL/SPX41/ECO2	36	40000	45000	2925	2770	4100	85	✐			18,21	101	
		32	48.0	68857	F32T8/XL/SPX50/ECO2	36	40000	45000	2850	2700	5000	82	✐			18,21	101	
		32	48.0	68858	F32T8/XL/SPX65/ECO2	36	40000	45000	2750	2610	6500	78	✐			18,21	101	
4' T8 Ecolux® Super Long Life																		
T8	Medium Bi-Pin (G13)	32	48.0	73093	F32T8/SXL/SPX30/ECO	36	65000	67000	2850	2675	3000	85	✐			18,21	101	
		32	48.0	73094	F32T8/SXL/SPX35/ECO	36	65000	67000	2850	2675	3500	85	✐			18,21	101	
		32	48.0	73095	F32T8/SXL/SPX41/ECO	36	65000	67000	2850	2675	4100	82	✐			18,21	101	
		32	48.0	73096	F32T8/SXL/SPX50/ECO	36	65000	67000	2800	2630	5000	80	✐			18,21	101	
4' T8 Ecolux® High Color Rendering																		
T8	Medium Bi-Pin (G13)	32	48	66343	F32T8/C50/ECO	36	30000	36000	1700	1600	5000	90	✐					Chroma 50
		32	48	66344	F32T8/C75/ECO	36	30000	36000	1700	1600	7500	93	✐					Chroma 75
Ultra Energy Saving T8 Lamps																		
2' T8 Ecolux® Watt-Miser® 15 Watt Lamp																		
T8	Medium Bi-Pin (G13)	15	24.0	72132	F17T8/XL/SPX30/WM/ECO	24	45000	50000	1200	1130	3000	85	✐	$	✈	1,18,20	101	
		15	24.0	72133	F17T8/XL/SPX35/WM/ECO	24	45000	50000	1200	1130	3500	85	✐	$	✈	1,18,20	101	
		15	24.0	72134	F17T8/XL/SPX41/WM/ECO	24	45000	50000	1200	1130	4100	82	✐	$	✈	1,18,20	101	
		15	24.0	72135	F17T8/XL/SPX50/WM/ECO	24	45000	50000	1175	1105	5000	80	✐	$	✈	1,18,20	101	

For the most up-to-date product information, see www.gelighting.com. To convert inches to millimeters, multiply by 25.4.
All footnotes, warning and caution notices found at the end of this section (page 4-26).

Bulb Shape	Base	Watts	Nominal Length (in)	Order Code	Description	Case Qty	Rated Life (3hr/ Start)	Rated Life (12hr/ Start)	Initial Lumens	Mean Lumens	Color Temp K	CRI	High Color Rendering	Energy Savings	Reduced Wattage	Footnotes	Warning and Caution Notices	Additional Information
Ultra Energy Saving T8 Lamps (continued)																		
3' T8 Ecolux® Watt-Miser® 22 Watt Lamp																		
T8	Medium Bi-Pin (G13)	22	36.0	72136	F25T8/XL/SPX30/WM/ECO	24	45000	50000	1925	1810	3000	85	✐	$	⚒	1,18,20	101	
		22	36.0	72137	F25T8/XL/SPX35/WM/ECO	24	45000	50000	1925	1810	3500	85	✐	$	⚒	1,18,20	101	
		22	36.0	72138	F25T8/XL/SPX41/WM/ECO	24	45000	50000	1925	1810	4100	82	✐	$	⚒	1,18,20	101	
		22	36.0	72139	F25T8/XL/SPX50/WM/ECO	24	45000	50000	1900	1785	5000	80	✐	$	⚒	1,18,20	101	
4' T8 Ecolux® 25 Watt Lamp																		
T8	Medium Bi-Pin (G13)	25	48.0	66467	F32T8/25W/SPP35/ECO	36	40000	45000	2500	2350	3500	80	✐	$	⚒	1,18,21	101	CEE Approved
		25	48.0	66468	F32T8/25W/SPP41/ECO	36	40000	45000	2500	2350	4100	80	✐	$	⚒	1,18,21	101	CEE Approved
		25	48.0	66469	F32T8/25W/SPP50/ECO	36	40000	45000	2500	2350	5000	80	✐	$	⚒	1,18,21	101	CEE Approved
		25	48.0	72128	F32T8/25W/SPX30/ECO	36	50000	55000	2500	2350	3000	85	✐	$	⚒	1,18,21	101	CEE Approved
		25	48.0	72129	F32T8/25W/SPX35/ECO	36	50000	55000	2500	2350	3500	85	✐	$	⚒	1,18,21	101	CEE Approved
		25	48.0	72130	F32T8/25W/SPX41/ECO	36	50000	55000	2500	2350	4100	85	✐	$	⚒	1,18,21	101	CEE Approved
		25	48.0	72131	F32T8/25W/SPX50/ECO	36	50000	55000	2500	2350	5000	80	✐	$	⚒	1,18,21	101	CEE Approved
4' T8 Ecolux® 25 Watt Super Long Life																		
T8	Medium Bi-Pin (G13)	25	48.0	93905	F32T825W/SXL/SPX35/ECO	36	80,000	84,000	2,400	2,260	3500	82	✐	$	⚒	18, 21	101	CEE Approved
		25	48.0	93906	F32T825W/SXL/SPX41/ECO	36	80,000	84,000	2,400	2,260	4100	82	✐	$	⚒	18, 21	101	CEE Approved
		25	48.0	93907	F32T825W/SXL/SPX50/ECO	36	80,000	84,000	2,400	2,260	5000	80	✐	$	⚒	18, 21	101	CEE Approved
4' T8 Ecolux® UltraMax® 28 Watt Lamp																		
T8	Medium Bi-Pin (G13)	28	48.0	66471	F28T8/XL/SPP35/ECO	36	40000	45000	2600	2440	3500	80	✐	$	⚒	1,18,21	101	CEE Approved
		28	48.0	66472	F28T8/XL/SPP41/ECO	36	40000	45000	2600	2440	4100	80	✐	$	⚒	1,18,21	101	CEE Approved
		28	48.0	66473	F28T8/XL/SPP50/ECO	36	40000	45000	2600	2440	5000	80	✐	$	⚒	1,18,21	101	CEE Approved
		28	48.0	72863	F28T8/XL/SPX30/ECO	36	45000	50000	2675	2515	3000	85	✐	$	⚒	1,18,21	101	CEE Approved
		28	48.0	72864	F28T8/XL/SPX35/ECO	36	45000	50000	2675	2515	3500	85	✐	$	⚒	1,18,21	101	CEE Approved
		28	48.0	72866	F28T8/XL/SPX41/ECO	36	45000	50000	2675	2515	4100	82	✐	$	⚒	1,18,21	101	CEE Approved
		28	48.0	72867	F28T8/XL/SPX50/ECO	36	45000	50000	2675	2515	5000	80	✐	$	⚒	1,18,21	101	CEE Approved
		28	48.0	66346	F28T8/XL/SPX65/ECO	36	45000	50000	2600	2440	6500	80	✐	$	⚒	1,18,21	101	CEE Approved
4' T8 Ecolux® UltraMax® 28 Watt Super Long Life																		
T8	Medium Bi-Pin (G13)	28	48.0	93902	F28T8/SXL/SPX35/ECO	36	80,000	84,000	2,600	2,440	3500	82	✐	$	⚒	18, 21	101	CEE Approved
		28	48.0	93903	F28T8/SXL/SPX41/ECO	36	80,000	84,000	2,600	2,440	4100	82	✐	$	⚒	18, 21	101	CEE Approved
		28	48.0	93904	F28T8/SXL/SPX50/ECO	36	80,000	84,000	2,600	2,440	5000	80	✐	$	⚒	18, 21	101	CEE Approved
4' T8 Ecolux® High Lumen																		
T8	Medium Bi-Pin (G13)	32	48.0	10327	F32T8/XL/SPX30/HL/ECO	36	40000	45000	3100	2915	3000	85	✐	$		18,21	101	CEE Approved
		32	48.0	10326	F32T8/XL/SPX35/HL/ECO	36	40000	45000	3100	2915	3500	85	✐	$		18,21	101	CEE Approved
		32	48.0	10322	F32T8/XL/SPX41/HL/ECO	36	40000	45000	3100	2915	4100	82	✐	$		18,21	101	CEE Approved
		32	48.0	42556	F32T8/XL/SPX50/HL/ECO	36	40000	45000	3000	2820	5000	80	✐	$		18,21	101	CEE Approved
8' T8 Lamps																		
8' T8 XL Extra-Life																		
T8	Single Pin (Fa8)	59	96.0	67969	F96T8/XL/SPP35	24	24000	30000	5800	5220	3500	80	✐				101	
		59	96.0	67970	F96T8/XL/SPP41	24	24000	30000	5800	5220	4100	80	✐				101	
		59	96.0	67971	F96T8/XL/SPP50	24	24000	30000	5800	5220	5000	80	✐				101	
		59	96.0	68868	F96T8/XL/SPX30/2	24	24000	30000	5950	5650	3000	85	✐				101	
		59	96.0	68869	F96T8/XL/SPX35/2	24	24000	30000	5950	5650	3500	85	✐				101	
		59	96.0	68870	F96T8/XL/SPX41/2	24	24000	30000	5950	5650	4100	85	✐				101	
		59	96.0	68871	F96T8/XL/SPX50/2	24	24000	30000	5950	5650	5000	82	✐				101	
8' T8 XL Extra-Life Watt-Miser® Plus Energy Saving Lamps																		
T8	Single Pin (Fa8)	54	96.0	66891	F96T8/54W/SPP35	24	24000	30000	5250	4900	3500	80	✐	$	⚒	1	101	
		54	96.0	66892	F96T8/54W/SPP41	24	24000	30000	5250	4900	4100	80	✐	$	⚒	1	101	
		54	96.0	47076	F96T8/XL/SP35/WMP	24	24000	30000	5800	5450	3500	85	✐	$	⚒	1	101	
		54	96.0	47103	F96T8/XL/SP41/WMP	24	24000	30000	5800	5450	4100	82	✐	$	⚒	1	101	
		54	96.0	66889	F96T8/XL/SP50/WMP	24	24000	30000	5500	5160	5000	80	✐	$	⚒	1	101	
		54	96.0	66890	F96T8/XL/SP65/WMP	24	24000	30000	5400	5020	6500	78	✐	$	⚒	1	101	
8' T8 49W XL Extra-Life Watt-Miser® Energy Saving Lamps																		
T8	Single Pin (Fa8)	49	96.0	66894	F96T8/49W/SPP35	24	24000	30000	4800	4500	3500	80	✐	$	⚒	1	101	
		49	96.0	66895	F96T8/49W/SPP41	24	24000	30000	4800	4500	4100	80	✐	$	⚒	1	101	
		49	96.0	79401	F96T8/49W/SPX30	24	24000	30000	5000	4700	3000	84	✐	$	⚒	1	101	
		49	96.0	79402	F96T8/49W/SPX35	24	24000	30000	5000	4700	3500	84	✐	$	⚒	1	101	
		49	96.0	79403	F96T8/49W/SPX41	24	24000	30000	5000	4700	4100	83	✐	$	⚒	1	101	

For the most up-to-date product information, see www.gelighting.com. To convert inches to millimeters, multiply by 25.4.
All footnotes, warning and caution notices found at the end of this section (page 4-26).

Bulb Shape	Base	Watts	Nominal Length (in)	Order Code	Description	Case Qty	Rated Life (3 hr/ start)	Rated Life (12 hr/ start)	Initial Lumens	Mean Lumens	Color Temp K	CRI	High Color Rendering	Energy Savings	Reduced Wattage	Footnotes	Warning and Caution Notices	Additional Information
8' T8 Lamps (continued)																		
8' T8 Instant Start																		
T8	Single Pin (Fa8)	50	96.0	10912	F96T8/CW	24	7500		4050	3730	4100	60					101	
8' T8 High Output																		
8' T8 High Output – Recessed Double Contact																		
T8	Recessed Double Contact (R17d)	86	96.0	12536	F96T8/SP30/HO	24	18000		8000	7600	3000	78					101	
		86	96.0	12537	F96T8/SP35/HO	24	18000		8000	7600	3500	78					101	
		86	96.0	12538	F96T8/SP41/HO	24	18000		8000	7600	4100	78					101	
		86	96.0	12533	F96T8/SPX35/HO	24	18000		8200	7800	3500	85	✐				101	
		86	96.0	12534	F96T8/SPX41/HO	24	18000		8200	7800	4100	85	✐				101	
		86	96.0	12535	F96T8/SPX50/HO	24	18000		8200	7800	5000	82	✐				101	
		86	96.0	66897	F96T8/SPX65/HO	24	18000		8000	7500	6500	78	✐				101	
T8 Mod-U-Line®																		
T8 1-5/8" Spacing Ecolux®																		
T8	Medium Bi-Pin (G13)	31	22.5	72117	F31T8/SPX30/U/ECO	15	24000		2775	2440	3000	82	✐			20	102	
		31	22.5	72118	F31T8/SPX35/U/ECO	15	24000		2775	2440	3500	82	✐			20	102	
		31	22.5	72119	F31T8/SPX41/U/ECO	15	24000		2775	2440	4100	82	✐			20	102	
T8 1-5/8" 29W Ecolux®																		
T8	Medium Bi-Pin (G13)	29	22.5	62172	F29T8/SPX30/U/ECO	15	24000		2500	2200	3000	82	✐	$	✂	20	102	
		29	22.5	62173	F29T8/SPX35/U/ECO	15	24000		2500	2200	3500	82	✐	$	✂	20	102	
		29	22.5	62174	F29T8/SPX41/U/ECO	15	24000		2500	2200	4100	82	✐	$	✂	20	102	
T8 1-5/8" 26W Ecolux®																		
T8	Medium Bi-Pin (G13)	26	22.5	62169	F26T8/SPX30/U/ECO	15	24000		2250	1980	3000	82	✐	$	✂	20	102	
		26	22.5	62170	F26T8/SPX35/U/ECO	15	24000		2250	1980	3500	82	✐	$	✂	20	102	
		26	22.5	62171	F26T8/SPX41/U/ECO	15	24000		2250	1980	4100	82	✐	$	✂	20	102	
T8 6" Spacing																		
T8	Medium Bi-Pin (G13)	32	22.5	68920	F32T8/SPX30/U6/2	12	20000		2800	2630	3000	82	✐			20	102	
		32	22.5	68921	F32T8/SPX35/U6/2	12	20000		2800	2630	3500	82	✐			20	102	
		32	22.5	68922	F32T8/SPX41/U6/2	12	20000		2800	2630	4100	82	✐			20	102	
		32	22.5	68923	F32T8/SPX50/U6/2	12	20000		2660	2510	5000	82	✐			20	102	
T8 6" Spacing Ecolux®																		
T8	Medium Bi-Pin (G13)	32	22.5	28145	F32T8/SP30/U6/ECO	12	20000		2700	2375	3000	78				20	102	
		32	22.5	28149	F32T8/SP35/U6/ECO	12	20000		2700	2375	3500	78				20	102	
		32	22.5	28152	F32T8/SP41/U6/ECO	12	20000		2700	2375	4100	78				20	102	
		32	22.5	72111	F32T8/SPX30/U6/ECO	12	20000		2800	2465	3000	82	✐			20	102	
		32	22.5	72112	F32T8/SPX35/U6/ECO	12	20000		2800	2465	3500	82	✐			20	102	
		32	22.5	72113	F32T8/SPX41/U6/ECO	12	20000		2800	2465	4100	82	✐			20	102	
T8 6" Spacing Ecolux® Watt-Miser® 30 Watt Lamp																		
T8	Medium Bi-Pin (G13)	30	22.5	72114	F32T8/SPX30/U6/WM/ECO	12	24000		2800	2465	3000	82	✐	$	✂	20	102	
		30	22.5	72115	F32T8/SPX35/U6/WM/ECO	12	24000		2800	2465	3500	82	✐	$	✂	20	102	
		30	22.5	72116	F32T8/SPX41/U6/WM/ECO	12	24000		2800	2465	4100	82	✐	$	✂	20	102	
T8 6" Spacing Ecolux® 28 Watt Lamp																		
T8	Medium Bi-Pin (G13)	28	23.0	67394	F28T8/SPX30/U6/ECO	12	20000		2500	2200	3000	82	✐	$	✂	20	102	
		28	23.0	67395	F28T8/SPX35/U6/ECO	12	20000		2500	2200	3500	82	✐	$	✂	20	102	
		28	23.0	67396	F28T8/SPX41/U6/ECO	12	20000		2500	2200	4100	82	✐	$	✂	20	102	
Other T8 Lengths																		
18" T8 w/Starcoat®																		
T8	Medium Bi-Pin (G13)	15	18.0	49489	F15T8/XL/SPX65	24	24000		850	800	6500	75	✐				101	
5' T8 w/Starcoat®																		
T8	Medium Bi-Pin (G13)	40	60.0	22660	F40T8/SPX30	24	20000		3725	3350	3000	84	✐				101	
		40	60.0	22661	F40T8/SPX35	24	20000		3725	3350	3500	84	✐				101	
		40	60.0	22662	F40T8/SPX41	24	20000		3725	3350	4100	84	✐				101	
6' T8 Instant Start																		
T8	Single Pin (Fa8)	35	72.0	10829	F72T8/CW	24	7500		3000	2730	4100	60					101	Not for sale for use in OR
		35	72.0	10835	F72T8/WW 6PK	6	7500		3100	2820	3000	52					101	Warm White, Not for sale for use in OR

For the most up-to-date product information, see www.gelighting.com. To convert inches to millimeters, multiply by 25.4.
All footnotes, warning and caution notices found at the end of this section (page 4-26).

Bulb Shape	Base	Watts	Nominal Length (in)	Order Code	Description	Case Qty	Rated Life (3 hr/ start)	Rated Life (12 hr/ start)	Initial Lumens	Mean Lumens	Color Temp K	CRI	High Color Rendering	Energy Savings	Reduced Wattage	Footnotes	Warning and Caution Notices	Additional Information
T8 Polylux																		
2' T8 Polylux																		
T8	Medium Bi-Pin (G13)	18	24.0	93311	F18T8/835/XLR	25	20000		1350	1280	3500	85	✐				101	
		18	24.0	93317	F18T8/841/XLR	25	20000		1350	1280	4100	85	✐				101	
4' T8 Polylux																		
T8	Medium Bi-Pin (G13)	36	48.0	19991	F36WT8/835/XLR	25	20000		3350	3180	3500	85	✐				101	
		36	48.0	16856	F36WT8/841/XLR	25	20000		3350	3180	3500	85	✐				101	
5' T8 Polylux																		
T8	Medium Bi-Pin (G13)	58	60.0	40120	F58T8/835/PLY/XLR	25	20000		5200	4940	3500	85	✐				101	
		58	60.0	40081	F58T8/841/PLY/XLR	25	20000		5200	4940	4000	85	✐				101	
6' T8 Polylux																		
T8	Medium Bi-Pin (G13)	70	70.0	62572	F70T8/835/PLY/XLR	25	20000		6000	5985	3500	85	✐				101	
		70	70.0	62573	F70T8/840/PLY/XLR	25	20000		6000	5985	4100	85	✐				101	
T8 Preheat																		
12" T8																		
T8	Medium Bi-Pin (G13)	13	12.0	10098	F13T8/CW	24	7500		565	480	4100	60					101	
15" T8																		
T8	Medium Bi-Pin (G13)	14	15.0	10104	F14T8/CW	24	7500		685	580	4100	60					101	
18" T8																		
T8	Medium Bi-Pin (G13)	15	18.0	17911	F15T8/SP35	24	7500		940	850	3500	75					101	
		15	18.0	19643	F15T8/SP41	24	7500		940	850	4100	72					101	
		15	18.0	19644	F15T8/SPX30	24	7500		1000	900	3000	82	✐				101	
		15	18.0	19645	F15T8/SPX35	24	7500		1000	900	3500	82	✐				101	
		15	18.0	10142	F15T8/CW	24	7500		825	725	4100	60					101	
		15	18.0	10143	F15T8/CW 6PK	24	7500		825	725	4100	60					101	
		15	18.0	10134	F15T8/D	24	7500		700	615	6500	75					101	Daylight
		15	18.0	21326	F15T8/KB 6PK	24	7500		940	850	3000	70					104	Kitchen & Bath
		15	18.0	13968	F15T8/SUN 6PK	24	7500		620	525	5000	90	✐				101	Sunlight
		15	18.0	10147	F15T8/WW	24	7500		845	745	3000	52					101	Warm White
36" T8																		
T8	Medium Bi-Pin (G13)	30	36.0	10316	F30T8/CW 6PK	24	7500		2150	1980	4100	60					101	
		30	36.0	10310	F30T8/D	24	7500		1850	1625	6500	75					101	Daylight
		30	36.0	22747	F30T8/KB 6PK	24	7500		2125	1910	3000	70					104	Kitchen & Bath
T12 Lamps																		
3' T12 Ecolux® – Rapid Start																		
25W																		
T12	Medium Bi-Pin (G13)	25	36.0	80080	F25T12/SP30/RS/WM/ECO	24	18000		2025	1780	3000	70		$	☛		101	
		25	36.0	80081	F25T12/SP35/RS/WM/ECO	24	18000		2025	1780	3500	73		$	☛		101	
		25	36.0	80065	F25T12/CWRSWM/ECO	24	18000		1925	1640	4100	60		$	☛		101	
		25	36.0	80077	F25T12/WW/RS/WM/ECO	24	18000		1975	1640	3000	52		$	☛		101	Warm White
30W																		
T12	Medium Bi-Pin (G13)	30	36.0	80087	F30T12/SP35/RS/ECO	24	18000		2350	2120	3500	73					101	
		30	36.0	80088	F30T12/SP41/RS/ECO	24	18000		2350	2120	4100	72					101	
		30	36.0	80089	F30T12/SPX30/RS/ECO	24	18000		2375	2140	3000	82	✐				101	
		30	36.0	80090	F30T12/SPX35/RS/ECO	24	18000		2375	2140	3500	82	✐				101	
		30	36.0	80083	F30T12/C50/RS/ECO	24	18000		1650	1350	5000	90	✐				101	Chroma 50
		30	36.0	80084	F30T12/CW/RS/ECO	24	18000		2200	1910	4100	60					101	
		30	36.0	80085	F30T12/CW/RS/ECO 6PK	24	18000		2200	1910	4100	60					101	
		30	36.0	80086	F30T12/D/RS/ECO	24	18000		1900	1650	6500	75					101	Daylight
		30	36.0	80091	F30T12/WW/RS/ECO	24	18000		2275	1980	3000	52					101	Warm White
4' T12 – Rapid Start																		
34W Watt-Miser® Ecolux® – TCLP Compliant																		
T12	Medium Bi-Pin (G13)	34	48.0	66474	F34CX41/WM/ECO	30	20000		2500	2200	4100	87	✐	$	☛	1	101	
		34	48.0	66649	F34CW/C/WM/ECO	30	15000		1800	1500	4100	87	✐	$	☛	1	101	
		34	48.0	80092	F34C50/RS/WM/ECO	30	20000		2000	1720	5000	90	✐	$	☛	1	101	Chroma 50
		34	48.0	80093	F34DX/RS/WM/ECO	30	20000		1750	1450	6500	90	✐	$	☛	1	101	Daylight Deluxe

For the most up-to-date product information, see www.gelighting.com. To convert inches to millimeters, multiply by 25.4.
All footnotes, warning and caution notices found at the end of this section (page 4-26).

Bulb Shape	Base	Watts	Nominal Length (in)	Order Code	Description	Case Qty	Rated Life (3 hr/ start)	Rated Life (12 hr/ start)	Initial Lumens	Mean Lumens	Color Temp K	CRI	High Color Rendering	Energy Savings	Reduced Wattage	Footnotes	Warning and Caution Notices	Additional Information
T12 Lamps (continued)																		
4' T12 – Rapid Start (continued)																		
40W Ecolux® – TCLP Compliant																		
T12	Medium Bi-Pin (G13)	40	48.0	66650	F40UT/ECO/UPC	30	15000		2100	1900	4100	87	✐				101	
		40	48.0	80096	F40C50/ECO	30	20000		2250	1870	5000	90	✐				101	Chroma 50
		40	48.0	25399	F40C50/ECO/UPC	30	20000		2250	1870	5000	90	✐				101	Chroma 50
		40	48.0	13795	F40C75 30PK	30	20000		1950	1680	7500	92	✐				101	Not for Sale for Use in CA, VM, OR
		40	48.0	80097	F40DX/ECO	30	20000		2050	1740	6500	90	✐				101	Daylight Deluxe
		40	48.0	80098	F40N/ECO	30	20000		2100	1740	3700	90	✐				101	Natural
		40	48.0	12224	F40SUN/ECO 6PK	24	20000		2250	1870	5000	90	✐				101	Sunlight
Watt-Miser® Energy Saving Lamps																		
T12 3-5/8" Spacing Watt-Miser®																		
T12	Medium Bi-Pin (G13)	35	22.5	68050	F35/CW/C/U3/WM	12	14000		1650	1400	4100	87						
		35	23.0	66854	F35/CX41/U3/WM	12	14000		2300	2185	4100	87	✐	$	✈	1	102	
T12 6" Spacing Watt-Miser®																		
T12	Medium Bi-Pin (G13)	35	22.5	68051	F35/CW/C/U6/WM	12	14000		1650	1400	4100	87						
		35	23.0	66855	F35/CX41/U6/WM	12	14000		2300	2185	4100	87	✐	$	✈	1	102	
		35	23.0	66851	F35/CX41/U6WMUPC	12	14000		2300	2185	4100	87	✐	$	✈	1	102	
T12 Instant Start																		
T12	Single Pin (Fa8)	20	24.0	10691	F24T12/CW	24	7500		1050	900	4100	60					101	
		30	36.0 cm	10709	F36T12/CW	24	7500		2000	1800	4100	60					101	
		35	42.0	10735	F42T12/CW	24	7500		2400	2210	4100	60					101	
		40	48.0	15262	F48T12/SP35	24	9000		3000	2820	3500	73					101	
		40	48.0	15088	F48T12/SPX30	24	9000		3050	2870	3000	82	✐				101	
		40	48.0	15116	F48T12/SPX35	24	9000		3050	2870	3500	82	✐				101	
		40	48.0	10748	F48T12/CW	24	9000		2875	2650	4100	60					101	
		40	48.0	20461	F48T12/CW/UPC 6PK	24	9000		2875	2650	4100	60					101	
Watt-Miser® Energy Saving Lamps																		
T12	Single Pin (Fa8)	30	48.0	14319	F48T12/SP35/WM	24	9000		2575	2420	3500	73		$	✈	1	101	
		30	48.0	13048	F48T12/SP41/WM	24	9000		2575	2420	4100	72		$	✈	1	101	
		30	48.0	44967	F48T12/CW/WM	24	9000		2475	2400	4100	60		$	✈	1	101	
8' T12 Instant Start																		
8' Instant Start Standard																		
T12	Single Pin (Fa8)	75	96.0	14652	F96T12/DX	15	12000		4300	3870	6500	90	✐				101	Daylight Deluxe
		75	96.0	13725	F96T12/N 15PK	15	12000		4250	3740	3700	90	✐				101	Natural
		75	96.0	13752	F96T12/C50	15	12000		4600	4050	5000	90	✐				101	Chroma 50
Watt-Miser® Energy Saving Lamps																		
8" Instant Start Watt-Miser®																		
T12	Single Pin (Fa8)	60	96.0	13756	F96T12/C50/WM 15PK	15	12000		4000	3520	5000	90	✐	$	✈	1	101	Chroma 50
8" Instant Start Watt-Miser® XL Extra-life																		
T12	Single Pin (Fa8)	60	96.0	68052	F96T12/CW/C/WM	15	12000		3600	2900	4100	90						
		60	96.0	66857	F96T12XL/HL35/WM	15	12000		5900	5480	3500	80	✐	$	✈	1	101	
		60	96.0	66858	F96T12XL/HL41/WM	15	12000		5900	5480	4100	80	✐	$	✈	1	101	
		60	96.0	66859	F96T12XL/HL50/WM	15	12000		5900	5480	5000	80	✐	$	✈	1	101	
		60	96.0	66860	F96T12XL/HL65/WM	15	12000		5700	5290	6500	78	✐	$	✈	1	101	
		60	96.0	66856	F96T12/XL/HL35/WM/UPC	15	12000		5900	5480	3500	80	✐	$	✈	1	101	
		60	96.0	66852	F96T12/XL/HL41/WM/UPC	15	12000		5900	5480	4100	80	✐	$	✈	1	101	
T12 Other Lengths																		
5' T12 Instant Start																		
T12	Single Pin (Fa8)	50	60.0	23073	F60T12/CW 15PK	15	12000		3600	3310	4100	60					101	
		50	60.0	23076	F60T12/D 15PK	15	12000		3000	2760	6500	75					101	Daylight
64" T12 Instant Start																		
T12	Single Pin (Fa8)	50	64.0	23082	F64T12/CW15PK	15	10000		3850	3540	4100	60					101	
		50	64.0	23085	F64T12/D 15PK	15	10000		3300	3040	6500	75					101	Daylight

For the most up-to-date product information, see www.gelighting.com. To convert inches to millimeters, multiply by 25.4.
All footnotes, warning and caution notices found at the end of this section (page 4-26).

Bulb Shape	Base	Watts	Nominal Length (in)	Order Code	Description	Case Qty	Rated Life (3 hr/ start)	Rated Life (12 hr/ start)	Initial Lumens	Mean Lumens	Color Temp K	CRI	High Color Rendering	Energy Savings	Reduced Wattage	Footnotes	Warning and Caution Notices	Additional Information
T12 Lamps (continued)																		
T12 Other Lengths (continued)																		
6' T12 Instant Start																		
T12	Single Pin (Fa8)	55	72.0	15286	F72T12/SP35 15PK	15	12000		4700	4420	3500	73					101	
		55	72.0	15097	F72T12/SP41	15	12000		4700	4420	4100	72					101	
		55	72.0	15117	F72T12/SPX30 15PK	15	12000		4800	4510	3000	82	✐				101	
		55	72.0	15098	F72T12/SPX35 15PK	15	12000		4800	4510	3500	82	✐				101	
		55	72.0	13743	F72T12/CW 15PK	15	12000		4500	4140	4100	60					101	
		55	72.0	12525	F72T12/CW/UPC 10PK	10	12000		4500	4140	4100	60					101	
		55	72.0	13748	F72T12/D 15PK	15	12000		3800	3500	6500	75					101	Daylight
7' T12 Instant Start																		
T12	Single Pin (Fa8)	65	84.0	13764	F84T12/CW 15PK	15	12000		5300	4880	4100	60					101	
T12 High Output (800mA) Rapid Start Recessed Double Contact																		
18" High Output																		
T12	Recessed Double Contact (R17d)	30	18.0	10204	F18T12/CW/HO	24	9000		1000	750	4100	60					101	
2' High Output																		
T12	Recessed Double Contact (R17d)	35	24.0	10261	F24T12/CW/HO	24	9000		1620	1345	4100	60					101	
		35	24.0	10275	F24T12/D/HO	24	9000		1400	1160	6500	74					101	Daylight
30" High Output																		
T12	Recessed Double Contact (R17d)	40	30.0	33707	F30T12/CW/HO	24	9000		2250	1950	4100	60					101	
3' High Output																		
T12	Recessed Double Contact (R17d)	45	36.0	10374	F36T12/CW/HO	24	9000		2800	2440	4100	60					101	
		45	36.0	10380	F36T12/D/HO	24	9000		2350	2040	6500	75					101	
		45	36.0	10388	F36T12/SGN/HO	24	9000		2150	1830	5400	82	✐				101	
42" High Output																		
T12	Recessed Double Contact (R17d)	55	42.0	10559	F42T12/CW/HO	24	9000		3200	2790	4100	60					101	
		55	42.0	10560	F42T12/D/HO	24	9000		2900	2520	6500	74					101	Daylight
		55	42.0	10562	F42T12/SGN/HO	24	9000		2600	2215	5400	82	✐				101	Sign White
4' High Output																		
T12	Recessed Double Contact (R17d)	60	48.0	15359	F48T12/SP30/HO	24	12000		4250	3830	3000	70					101	
		60	48.0	15360	F48T12/SP35/HO	24	12000		4250	3830	3500	73					101	
		60	48.0	15361	F48T12/SP41/HO	24	12000		4250	3830	4100	72					101	
		60	48.0	15115	F48T12/SPX35/HO	24	12000		4350	3920	3500	82	✐				101	
		60	48.0	10773	F48T12/CW/HO	24	12000		3825	3320	4100	60					101	
		60	48.0	27313	F48T12/CW/HO/UPC	24	12000		4050	3520	4100	60					101	
		60	48.0	10778	F48T12/D/HO	24	12000		3400	2960	6500	75					101	Daylight
		60	48.0	10573	F48T12/SGN/HO	24	12000		3100	2640	5400	80	✐				101	Sign White
4' High Output Watt-Miser® Energy Saving Lamps																		
T12	Recessed Double Contact (R17d)	55	48.0	15342	F48T12/SP35/HO/WM	24	12000		3850	3465	3500	73		$	✂	1	101	
		55	48.0	11179	F48T12/LW/HO/WM	24	12000		3900	3390	4200	49		$	✂	1	101	Lite White
5' High Output																		
T12	Recessed Double Contact (R17d)	75	60.0	23075	F60T12/CW/HO 15PK	15	12000		5150	4480	4100	60					101	
		75	60.0	23077	F60T12/D/HO 15PK	15	12000		4400	3830	6500	75					101	Daylight
		75	60.0	23081	F60T12/SGN/HO 15PK	15	12000		4000	3400	5400	82	✐				101	Sign White
64" High Output																		
T12	Recessed Double Contact (R17d)	80	64.0	23083	F64T12/CW/HO 15PK	15	12000		5600	4870	4100	60					101	
		80	64.0	23087	F64T12/D/HO 15PK	15	12000		4750	4130	6500	75					101	Daylight
		80	64.0	23089	F64T12/SGN/HO 15PK	15	12000		4300	3660	5400	82	✐				101	Sign White

Bulb Shape	Base	Watts	Nominal Length (in)	Order Code	Description	Case Qty	Rated Life (3 hr/ start)	Rated Life (12 hr/ start)	Initial Lumens	Mean Lumens	Color Temp K	CRI	High Color Rendering	Energy Savings	Reduced Wattage	Footnotes	Warning and Caution Notices	Additional Information
T12 Lamps (continued)																		
T12 High Output (800mA) Rapid Start Recessed Double Contact (continued)																		
6' High Output																		
T12	Recessed Double Contact (R17d)	85	72.0	15343	F72T12/SP30/HO 15PK	15	12000		6650	5990	3000	70					101	
		85	72.0	15347	F72T12/SP35/HO 15PK	15	12000		6650	5990	3500	73					101	
		85	72.0	15348	F72T12/SP41/HO 15PK	15	12000		6650	5990	4100	72					101	
		85	72.0	15137	F72T12/SPX30/HO 15PK	15	12000		6800	6120	3000	82	✐				101	
		85	72.0	15351	F72T12/SPX35/HO 15PK	15	12000		6800	6120	3500	82	✐				101	
		85	72.0	13697	F72T12/CW/HO 15PK	15	12000		6350	5520	4100	60					101	
		85	72.0	13699	F72T12/D/HO 15PK	15	12000		5350	4650	6500	75					101	Daylight
		85	72.0	12527	F72T12/N/HO	10	12000		4300	3610	3700	90	✐				101	Natural
		85	72.0	13701	F72T12/SGN/HO 15PK	15	12000		4900	4170	5400	82	✐				101	Sign White
		85	72.0	13702	F72T12/WW/HO 15PK	15	12000		6550	5700	3000	52					101	Warm White
7' High Output																		
T12	Recessed Double Contact (R17d)	100	84.0	13766	F84T12/CW/HO 15PK	15	12000		7700	6700	4100	60					101	
		100	84.0	13767	F84T12/D/HO 15PK	15	12000		6500	5660	6500	75					101	Daylight
		100	84.0	13768	F84T12/SGN/HO 15PK	15	12000		6000	5100	5400	82	✐				101	Sign White
8' High Output																		
T12	Recessed Double Contact (R17d)	110	96.0	13707	F96T12/C50/HO 15PK	15	12000		6750	5670	5000	90	✐				101	Chroma 50
		110	96.0	14653	F96T12/DX/HO	15	12000		6100	5185	6500	90	✐				101	Daylight Deluxe
8' High Output Watt-Miser® Energy Saving Lamps																		
T12	Recessed Double Contact (R17d)	95	96.0	66861	F96T12/HL30/HO/WM	15	12000		8850	7920	3000	77	✐	$	✈	1	101	
		95	96.0	66862	F96T12/HL41/HO/WM	15	12000		8850	7920	4100	77	✐	$	✈	1	101	
		95	96.0	66853	F96T12/HL41/HO/WM/UPC	15	12000		8850	7920	4100	77	✐	$	✈	1	101	
T12 Very High Output (1500mA) Recessed Double Contact																		
T12	Recessed Double Contact (R17d)	110	48.0	10751	F48T12/CW/1500	24	10000		6200	4030	4100	60				4	101	
		165	72.0	13760	F72T12/CW/1500 15PK	15	10000		9000	6300	4100	60				4	101	
		185	96.0	13789	F96T12/CW/1500/WM 15PK	15	9000		12500	9380	4100	60		$	✈	4	101	
		215	96.0	13781	F96T12/CW/1500 15PK	15	10000		13500	10125	4100	60				4	101	
		215	96.0	13783	F96T12/D/1500 15PK	15	10000		11500	8630	6500	74				4	101	Daylight
T12 Preheat																		
15"																		
T12	Medium Bi-Pin (G13)	14	15.0	10116	F14T12/CW	24	9000		650	550	4100	60					101	Preheat
		14	15.0	10117	F14T12/CW 6PK	24	9000		650	550	4100	60					101	Preheat
		14	15.0	22979	F14T12/KB 6PK	24	9000		700	650	3000	70					104	Preheat, Kitchen & Bath
18"																		
T12	Medium Bi-Pin (G13)	15	18.0	10183	F15T12/CW 6PK	24	9000		760	685	4100	60					101	Preheat
		15	18.0	22745	F15T12/KB 6PK	24	9000		785	730	3000	70					104	Preheat, Kitchen & Bath
		15	18.0	10185	F15T12/WW	24	9000		780	700	3000	52					101	Preheat
24"																		
T12	Medium Bi-Pin (G13)	20	24.0	80048	F20T12/SP35/ECO	24	9000		1275	1200	3500	73					101	Preheat
		20	24.0	15353	F20T12/SP41	24	9000		1275	1200	4100	72					101	Preheat
		20	24.0	80049	F20T12/SPX35/ECO	24	9000		1300	1220	3500	82	✐				101	Preheat
		20	24.0	80044	F20T12/C50/ECO	24	9000		875	790	5000	90	✐				101	Preheat
		20	24.0	80045	F20T12/CW/ECO	24	9000		1200	1150	4100	60					101	Preheat
		20	24.0	80046	F20T12/CW/ECO 6PK	24	9000		1200	1150	4100	60					101	Preheat
		20	24.0	80047	F20T12/D/ECO	24	9000		1025	945	6500	75					101	Preheat
		20	24.0	25575	F20T12/D/ECO/UPC	24	9000		1025	945	6500	75					101	Preheat, Daylight
		20	24.0	21325	F20T12/KB/ECO	24	9000		1275	1200	3000	70					104	Preheat, Kitchen & Bath
		20	24.0	14419	F20T12/SUN/ECO	24	9000		875	790	5000	90	✐				101	Preheat, Sunlight
		20	24.0	80050	F20T12/WW/ECO	24	9000		1250	1150	3000	52					101	Preheat, Warm White
		20	24.0	25577	F20T12/WW/ECO/UPC	24	9000		1250	1150	3000	52					101	Preheat, Warm White
Other Diameters																		
T6 Instant Start																		
T6	Single Pin (Fa8)	25	42.0	12221	F42T6/SP35	24	7500		1830	1700	3500	73					101	
		25	42.0	10720	F42T6/CW	24	7500		1750	1580	4100	60					101	
		25	42.0	10721	F42T6/WW	24	7500		1825	1640	3000	52					101	Warm White
		40	64.0	10805	F64T6/CW	24	7500		2800	2520	4100	60					101	
		40	64.0	10807	F64T6/WW	24	7500		2900	2610	3000	52					101	Warm White

For the most up-to-date product information, see www.gelighting.com. To convert inches to millimeters, multiply by 25.4.
All footnotes, warning and caution notices found at the end of this section (page 4-26).

Bulb Shape	Base	Watts	Nominal Length (in)	Order Code	Description	Case Qty	Rated Life (3 hr/ start)	Rated Life (12 hr/ start)	Initial Lumens	Mean Lumens	Color Temp K	CRI	High Color Rendering	Energy Savings	Reduced Wattage	Footnotes	Warning and Caution Notices	Additional Information
Other Diameters (continued)																		
T17 Instant Start																		
T17	Mogul Bi-Pin (G20)	40	60.0	10575	F40T17/CW/IS	12	7500		2850	2620	4100	60			✓	3	101	Use only w/ Instant Start Ballasts
Pg17 T17 Preheat																		
T17	Mogul Bi-Pin (G20)	82	60.0	43443	F90T17/CW/WM	12	9000		5750	5060	4100	60		$	✓	4	101	
		90	60.0	10643	F90T17/CW	12	9000		6000	5280	4100	60			✓	4	101	
Power Groove Recessed Double Contact (1500mA)																		
PG17	Recessed Double Contact (R17d)	185	96.0	42666	F96PG17/CW/WM	8	12000		12700	9900	4100	60		$	✓	4	101	
		215	96.0	11009	F96PG17/CW	8	10000		14000	10915	4100	60			✓	4	101	
		215	96.0	11018	F96PG17/D	8	10000		12100	9440	6500	74				4	101	Daylight
T9 Circline® Lamps																		
T9	4-Pin (G10q)	20	6.5	42732	FC6T9/CW	12	12000		800	560	4100	60					101	
		22	8.25	33774	FC8T9/CW	12	12000		1100	825	4100	60					101	
		22	8.25	11026	FC8T9/D	12	12000		925	690	6500	75					101	Daylight
		22	8.25	11084	FC8T9/KB	6	12000		1400	1120	3000	82	✓				104	Kitchen & Bath
		32	12.0	33890	FC12T9/CW	12	12000		1950	1460	4100	60					101	
		32	12.0	11039	FC12T9/D	12	12000		1675	1260	6500	75					101	Daylight
		32	12.0	11085	FC12T9/KB	6	12000		2400	1920	3000	82	✓				104	Kitchen & Bath
		40	16.0	33893	FC16T9/CW	12	12000		2700	2030	4100	60					101	
		40	16.0	11052	FC16T9/D	12	12000		2250	1690	6500	75					101	Daylight
Special Application Lamps																		
covRguard® Shatter Resistant																		
T5 High Efficiency																		
T5	Miniature Bi-Pin (G5)	14	21.6	73194	F14W/T5/830/ECO/CVG	40	30000	36000	1310	1200	3000	85	✓			11,13	103	Blocks UV
		14	21.6	73195	F14W/T5/835/ECO/CVG	40	30000	36000	1310	1200	3500	85	✓			11,13	103	Blocks UV
		28	45.2	81546	F28W/T5/830/ECO/CVG	40	30000	36000	2813	2672	3000	85	✓			11,13	103	Blocks UV
		28	45.2	81547	F28W/T5/835/ECO/CVG	40	30000	36000	2813	2672	3500	85	✓			11,13	103	Blocks UV
		28	45.2	81548	F28W/T5/841/ECO/CVG	40	30000	36000	2813	2672	4100	85	✓			11,13	103	Blocks UV
		28	45.2	81549	F28W/T5/850/ECO/CVG	40	30000	36000	2667	2534	5000	85	✓			11,13	103	Blocks UV
		28	45.2	81550	F28W/T5/865/ECO/CVG	40	30000	36000	2319	2488	6500	85	✓			11,13	103	Blocks UV
T5 High Output																		
T5	Miniature Bi-Pin (G5)	24	21.6	71000	F24W/T5/830/ECO/CVG	40	30000	36000	1950	1853	3000	85	✓			11	103	
		24	21.6	70998	F24W/T5/835/ECO/CVG	40	30000	36000	1950	1853	3500	85	✓			11	103	
		24	21.6	70997	F24W/T5/841/ECO/CVG	40	30000	36000	1950	1853	4100	85	✓			11	103	
		24	21.6	70999	F24W/T5/850/ECO/CVG	40	30000	36000	1850	1758	5000	85	✓			11	103	
		39	33.4	70995	F39W/T5/830/ECO/CVG	40	30000	36000	3400	3230	3000	85	✓			11	103	
		39	33.4	70994	F39W/T5/835/ECO/CVG	40	30000	36000	3400	3230	3500	85	✓			11	103	
		39	33.4	70993	F39W/T5/841/ECO/CVG	40	30000	36000	3400	3230	4100	85	✓			11	103	
		39	33.4	70990	F39W/T5/865/ECO/CVG	40	30000	36000	3200	3040	6500	85	✓			11	103	
		54	45.2	48433	F54T5/830/HO/ECO/CVG	40	30000	36000	4850	4560	3000	85	✓			11	103	
		54	45.2	48436	F54T5/835/HO/ECO/CVG	40	30000	36000	4850	4560	3500	85	✓			11	103	
		54	45.2	48458	F54T5/841/HO/ECO/CVG	40	30000	36000	4850	4560	4100	85	✓			11	103	
		54	45.2	80311	F54T5/850/HO/ECO/CVG	40	30000	36000	4650	4370	5000	85	✓			11	103	
		54	45.2	48469	F54T5/865/HO/ECO/CVG	40	30000	36000	4650	4320	6500	85	✓			11	103	
T5 High Output Watt-Miser®																		
T5	Miniature Bi-Pin (G5)	51	45.2	72986	F54T5/835/WM/ECO/CVG	40	30000	36000	4850	4560	3500	85	✓	$	✓	11	103	
		51	45.2	72987	F54T5/841/WM/ECO/CVG	40	30000	36000	4850	4560	4100	85	✓	$	✓	11	103	
		51	45.2	72988	F54T5/850/WM/ECO/CVG	40	30000	36000	4650	4370	5000	85	✓	$	✓	11	103	
		47	45.0	65106	F54T5/47W/841CVG	40	30000	36000	4728	4343	4100	85	✓	$	✓	11	103	
		47	45.0	65107	F54T5/47W/850CVG	40	30000	36000	4531	4167	5000	85	✓	$	✓	11	103	
T5 Preheat Lamps																		
T5	Miniature Bi-Pin (G5)	8	12.0	41107	F8T5/CW/CVG	24	5000		385	310	4100	60				11,13	103	Blocks UV
		13	21.0	41108	F13T5/CW/CVG	24	5000		820	684	4100	60				11,13	103	Blocks UV

For the most up-to-date product information, see www.gelighting.com. To convert inches to millimeters, multiply by 25.4.
All footnotes, warning and caution notices found at the end of this section (page 4-26).

Bulb Shape	Base	Watts	Nominal Length (in)	Order Code	Description	Case Qty	Rated Life (3 hr/ start)	Rated Life (12 hr/ start)	Initial Lumens	Mean Lumens	Color Temp K	CRI	High Color Rendering	Energy Savings	Reduced Wattage	Footnotes	Warning and Caution Notices	Additional Information
Special Application Lamps (continued)																		
T8 Ecolux® w/ Starcoat®																		
2' T8 Ecolux® w/ Starcoat®																		
T8	Medium Bi-Pin (G13)	17	24.0	15974	F17T8SP35ECOCVG	24	30000	36000	1280	1220	3500	78				11,13,18	103	Blocks UV
		17	24.0	15977	F17T8SP41ECOCVG	24	30000	36000	1280	1220	4100	78				11,13,18	103	Blocks UV
		17	24.0	15975	F17T8SPX35ECOCVG	24	30000	36000	1310	1242	3500	85	✐			11,13,18	103	Blocks UV
		17	24.0	15976	F17T8SPX41ECOCVG	24	30000	36000	1310	1242	4100	85	✐			11,13,18	103	Blocks UV
		17	24.0	28885	F17T8XLSPX50ECOCVG	24	40000	45000	1310	1243	5000	82	✐			11,13,18	103	Blocks UV
3' Ecolux® w/Starcoat®																		
T8	Medium Bi-Pin (G13)	25	36.0	15978	F25T8SP30ECOCVG	24	30000	36000	2020	1920	3000	78				11,13,18	103	Blocks UV
		25	36.0	15981	F25T8SP35ECOCVG	24	30000	36000	2020	1920	3500	78				11,13,18	103	Blocks UV
		25	36.0	15984	F25T8SP41ECOCVG	24	30000	36000	2020	1920	4100	78				11,13,18	103	Blocks UV
		25	36.0	15989	F25T8SPX30ECOCVG	24	30000	36000	2080	1970	3000	85	✐			11,13,18	103	Blocks UV
		25	36.0	15990	F25T8SPX35ECOCVG	24	30000	36000	2080	1970	3500	85	✐			11,13,18	103	Blocks UV
		25	36.0	15991	F25T8SPX41ECOCVG	24	30000	36000	2080	1970	4100	85	✐			11,13,18	103	Blocks UV
		25	36.0	28887	F25T8XLSPX50ECOCVG	24	40000	45000	1990	1890	5000	82	✐			11,13,18	103	Blocks UV
4' T8 (48") Ecolux® w/Starcoat®																		
T8	Medium Bi-Pin (G13)	32	48.0	94838	F32T8SPP30ECO/CVG	36	30000	36000	2800	2640	3000	80				11,13,18	103	Blocks UV
		32	48.0	94839	F32T8SPP35ECO/CVG	36	30000	36000	2800	2640	3500	80				11,13,18	103	Blocks UV
		32	48.0	94861	F32T8SPP41ECO/CVG	36	30000	36000	2800	2640	4100	80				11,13,18	103	Blocks UV
		32	48.0	94842	F32T8SPP50ECO/CV	36	30000	36000	2800	2640	5000	80				11,13,18	103	Blocks UV
		32	48.0	94843	F32T8SPX65ECO/CV	36	30000	36000	2800	2670	6500	78				11,13,18	103	Blocks UV
		32	48.0	41125	F32T8SPX30ECOCVG	36	30000	36000	2860	2715	3000	85	✐			11,13,18	103	Blocks UV
		32	48.0	41126	F32T8SPX35ECOCVG	36	30000	36000	2860	2715	3500	85	✐			11,13,18	103	Blocks UV
		32	48.0	41127	F32T8SPX41ECOCVG	36	30000	36000	2860	2715	4100	85	✐			11,13,18	103	Blocks UV
		32	48.0	15971	F32T8SPX50ECOCVG	36	30000	36000	2715	2580	5000	82	✐			11,13,18	103	Blocks UV
4' T8 Ecolux® XL Extra-life w/Starcoat®																		
T8	Medium Bi-Pin (G13)	32	48.0	15972	F32T8XLSPX30ECOCVG	36	40000	45000	2860	2715	3000	85	✐			11,13,18	103	Blocks UV
		32	48.0	15973	F32T8XLSPX35ECOCVG	36	40000	45000	2860	2715	3500	85	✐			11,13,18	103	Blocks UV
		32	48.0	18369	F32T8XLSPX41ECCVG	36	40000	45000	2860	2715	4100	85	✐			11,13,18	103	Blocks UV
		32	48.0	23746	F32T8XLSPX50ECOCVG	36	40000	45000	2715	2580	5000	82				11,13,18	103	Blocks UV
Ultra Energy Saving T8 Lamps w/ covRguard®																		
4' T8 Ecolux® 25 Watt Lamp																		
T8	Medium Bi-Pin (G13)	25	48.0	72814	F32T8/25WSPX41ECOCVG	36	40000	46000	2425	2350	4100	82	✐	$	✈	1,11,13,18	103	Blocks UV
		25	48.0	72815	F32T8/25WSPX50ECOCVG	36	40000	46000	2425	2350	5000	80	✐	$	✈	1,11,13,18	103	Blocks UV
4' T8 Ecolux® UltraMax® 28 Watt Lamp																		
T8	Medium Bi-Pin (G13)	28	48.0	73292	F28T8/XLSPX30ECO/CVG	36	40000	46000	2595	2440	3000	85	✐	$	✈	1,11,13,18	103	Blocks UV, CEE Approved
		28	48.0	73293	F28T8/XLSPX35ECO/CVG	36	40000	46000	2595	2440	3500	85	✐	$	✈		103	Blocks UV, CEE Approved
		28	48.0	73294	F28T8/XLSPX41ECO/CVG	36	40000	46000	2595	2440	4100	82	✐	$	✈		103	Blocks UV, CEE Approved
		28	48.0	73295	F28T8/XLSPX50ECO/CVG	36	40000	46000	2595	2440	5000	80	✐	$	✈		103	Blocks UV
4' T8 Ecolux® High Lumen XL Extra-Life w/Starcoat®																		
T8	Medium Bi-Pin (G13)	32	48.0	00268	F32T8XLSPX35HCVG	36	40000	45000	3007	2827	3500	85	✐	$		11,13,18	103	Blocks UV
		32	48.0	00269	F32T8XLSPX41HCVG	36	40000	45000	3007	2827	4100	82	✐	$		11,13,18	103	Blocks UV
		32	48.0	80497	F32T8XLSPX50HCVG	36	40000	45000	2910	2735	5000	80	✐	$		11,13,18	103	Blocks UV
5' T8 w/Starcoat®																		
5' T8 (60") w/Starcoat®																		
T8	Medium Bi-Pin (G13)	40	60.0	41131	F40T8/SPX35/CVG	24	20000		3610	3250	3500	84	✐			11,13	103	Blocks UV
		40	60.0	47351	F40T8/SPX41/CVG	24	20000		3610	3250	4100	84	✐			11,13	103	Blocks UV
T8 Instant Start w/Starcoat®																		
8' T8 (96") Instant Start w/Starcoat®																		
T8	Single Pin (Fa8)	59	96.0	94856	F96T8XL/SPX30/CVG	24	24000	30000	5750	5480	3000	85				11,13	103	Blocks UV
		59	96.0	94859	F96T8XL/SPP35/CVG	24	24000	30000	5600	5060	3500	80				11,13	103	Blocks UV
		59	96.0	94860	F96T8XL/SPP41/CVG	24	24000	30000	5600	5060	4100	80				11,13	103	Blocks UV
		59	96.0	40099	F96T8XL/SPX30CVG	24	24000	30000	5770	5480	3000	85	✐			11,13	103	Blocks UV
		59	96.0	40105	F96T8XL/SPX35/CVG	24	24000	30000	5770	5480	3500	85	✐			11,13	103	Blocks UV
		59	96.0	40106	F96T8XL/SPX41/CVG	24	24000	30000	5770	5480	4100	85	✐			11,13	103	Blocks UV
		59	96.0	48205	F96T8XL/SPX50/CVG	24	24000	30000	5770	5480	5000	82	✐			11,13	103	Blocks UV

For the most up-to-date product information, see www.gelighting.com. To convert inches to millimeters, multiply by 25.4.
All footnotes, warning and caution notices found at the end of this section (page 4-26).

Bulb Shape	Base	Watts	Nominal Length (in)	Order Code	Description	Case Qty	Rated Life (3 hr/ start)	Rated Life (12 hr/ start)	Initial Lumens	Mean Lumens	Color Temp K	CRI	High Color Rendering	Energy Savings	Reduced Wattage	Footnotes	Warning and Caution Notices	Additional Information
Special Application Lamps (continued)																		
8' T8 High Output Lamps Recessed Double Contact w/Starcoat®																		
T8	Recessed Double Contact (R17d)	86	96.0	40107	F96T8/SP35HO/CVG	24	18000		7760	7370	3500	78				11,12,13	103	Blocks UV
		86	96.0	40108	F96T8/SP41HO/CVG	24	18000		7760	7370	4100	78				11,12,13	103	Blocks UV
		86	96.0	81563	F96T8/SPX50HO/CVG	24	18000		7954	7566	5000	82	✐			11,12,13	103	Blocks UV
T8 Preheat Lamps																		
T8	Medium Bi-Pin (G13)	13	12.0	41109	F13T8/CW/CVG	24	7500		545	465	4100	60				11,13	103	Blocks UV
		15	18.0	41110	F15T8/CW/CVG	24	7500		800	700	4100	60				11,13	103	Blocks UV
		15	18.0	46627	F15T8/KB/CVG/UPC	24	7500		910	825	3000	70				11,13	103	Blocks UV
		15	18.0	46216	F15T8/SP35/CVG	24	7500		910	825	3500	75				11,13	103	Blocks UV
		15	18.0	41111	F15T8/SPX35/CVG	24	7500		970	870	3500	82	✐			11,13	103	Blocks UV
T12 Rapid Start Lamps																		
3' Ecolux® T12 (36")																		
T12	Medium Bi-Pin (G13)	30	36.0	80486	F30T12CWRSECOCVG	24	18000		2130	1850	4100	60				11,13	103	Blocks UV
4' T12 Ecolux® Rapid Start Watt-Miser® Lamps (48")																		
T12	Medium Bi-Pin (G13)	40	48.0	80994	F40DX/ECO/CVG	30	20000		1988	1687	6500	90	✐			11,13	103	Daylight Deluxe
		40	48.0	80496	F40/C50/ECO/CVG	30	20000		2180	1810	5000	90	✐			11,13	103	Chroma 50
T12 Instant Start																		
T12	Single Pin (Fa8)	40	48.0	40127	F48T12/CW/CVG	24	9000		2780	2560	4100	60				11,13	103	
		40	48.0	41144	F48T12/SPX35/CVG	24	9000		2950	2780	3500	82	✐			11,13	103	
		50	60.0	41147	F60T12CW/CVG	15	12000		3490	3210	4100	60				11,13	103	
		55	72.0	41153	F72T12/SPX35/CVG	15	12000		4650	4370	3500	82	✐			11,13	103	
T12 Instant Start - Watt-Miser® Energy Saving Lamps																		
8' T12 Rapid Start Watt-Miser® Lamps (96")																		
T12	Single Pin (Fa8)	60	96.0	26038	F96T12XLHL41WMCV	15	12000		5723	5315	4100	80	✐	$	✈	1,11,14	103	
T12 Preheat																		
T12	Medium Bi-Pin (G13)	15	18.0	41114	F15T12/CW/CVG	24	9000		735	660	4100	60				11,13	103	Preheat
T12 High Output Lamps Recessed Double Contact																		
T12	Recessed Double Contact (R17d)	60	48.0	40129	F48T12/CW/HO/CVG	24	12000		3930	3410	4100	60				11,12,13	103	
		75	60.0	41148	F60T12/CW/HO/CVG	15	12000		4990	4340	4100	60				11,12,13	103	
		85	72.0	40811	F72T12CW/HO/CVG	15	12000		6150	5350	4100	60				11,12,13	103	
		85	72.0	46207	F72T12SP35HO/CVG	15	12000		6450	5810	3500	73				11,12,13	103	
		85	72.0	41152	F72T12SPX30HOCVG	15	12000		6590	5930	3000	82	✐			11,12,13	103	
		85	72.0	41154	F72T12SPX35HOCVG	15	12000		6590	5930	3500	82	✐			11,12,13	103	
		110	96.0	46430	F96T12/DX/HO/CVG	15	12000		5917	5029	6500	90	✐			11,12,13	103	Daylight Deluxe
T12 High Output Lamps Recessed Double Contact – Watt-Miser® Energy Saving Lamps																		
T12	Recessed Double Contact (R17d)	95	96.0	26039	F96T12HL41HOWMCV	15	12000		8580	7680	4100	77	✐	$	✈	1,11,12,13	103	
Germicidal covRguard®																		
T8																		
T8	Medium Bi-Pin (G13)	15	18.0	72761	G15T8/CVG	24	7500									9	106	
Cold Temperature Lamps																		
T5																		
T5	Miniature Bi-Pin (G5)	54	45.2	81522	F54T5/841/CT	36	30000	36000	4500	4275	4100	85	✐			11,13,17	101	Plastic Jacket
T8																		
T8	Medium Bi-Pin (G13)	58	60.0	16148	F58T8/835/CT	24	20000		4680	4450	3500	85	✐			11,13,17	101	Plastic Jacket
		58	60.0	23752	F58T8/841/CT	24	20000		4680	4450	4100	85	✐			11,13,17	101	Plastic Jacket
		70	72.0	16149	F70T8/835/CT	18	20000		5670	5386	3500	85	✐			11,13,17	101	Plastic Jacket
		70	72.0	23754	F70T8/841/CT	18	20000		5670	5386	4100	85	✐			11,13,17	101	Plastic Jacket

For the most up-to-date product information, see www.gelighting.com. To convert inches to millimeters, multiply by 25.4.
All footnotes, warning and caution notices found at the end of this section (page 4-26).

Bulb Shape	Base	Watts	Nominal Length (in)	Order Code	Description	Case Qty	Rated Life (3 hr/ start)	Rated Life (12 hr/ start)	Initial Lumens	Mean Lumens	Color Temp K	CRI	High Color Rendering	Energy Savings	Reduced Wattage	Footnotes	Warning and Caution Notices	Additional Information
Cold Temperature Lamps (continued)																		
High Output (800mA) Recessed Double Contact																		
T12	Recessed Double Contact (R17d)	85	72.0	46199	F72T12/CW/HO-CT	8	12000		6150	5350	4100	60				11,13,17	101	Plastic Jacket
		110	96.0	11918	F96T12/CW/HO/CT	15	12000		8900	7740	4100	60				11,13,17	101	
		110	96.0	11919	F96T12/D/HO/CT	15	12000		7600	6610	6500	75				11,13,17	101	
T10 Very High Output (1500mA) Recessed Double Contact																		
T10	Recessed Double Contact (R17d)	110	48.0	10742	F48T10/CW	24	9000		6200		4100	60				4	101	
		135	60.0	17135	F60T10/SP30	24	6000		8500		3000	70				4	101	
		135	60.0	39157	F60T10/CW	24	6000		7000		4100	60				4	101	
		135	60.0	13002	F60T10/CW 6PK	6	6000		7000		4100	60				4	101	
		135	60.0	46197	F60T10/CW-CT	12	6000		6790		4100	60				4,13,17	101	Plastic Jacket
		160	72.0	13776	F72T10/CW 15PK	15	9000		9700		4100	60				4	101	
		160	72.0	46198	F72T10/CW-CT	8	9000		9400		4100	60				4,13,17	101	Plastic Jacket
T12 Very High Output (1500mA) Recessed Double Contact																		
T12	Recessed Double Contact (R17d)	110	48.0	34206	F48T12/CW/1500/0	24	10000		7000		4100	60				4	101	
		110	48.0	46195	F48T12CW/VHO/CT	12	10000		6790		4100	60				4,15,17	101	Plastic Jacket
		170	72.0	13762	F72T12CW1500/0	15	10000		10800		4100	60				4	101	
		170	72.0	46200	F72T12CW/VHO/CT	8	10000		10470		4100	60				4,15,17	101	Plastic Jacket
		220	96.0	13788	F96T12/CW/1500/0	15	10000		14400		4100	60				4	101	
		220	96.0	46202	F96T12CW/VHO-CT	8	10000		13960		4100	60				4,15,17	101	
Appliance Lamps																		
T8																		
T8	Medium Bi-Pin (G13)	18	22.0	10257	F22T8/D/4	24	7500		925	790	6500	75					101	Daylight
		18	24.0	17705	F24T8/CW/4 6PK	24	7500		1150	1040	4100	60					101	
		19	26.0	10702	F26T8/CW/4	24	7500		1275	1085	4100	60					101	
		19	26.0	38199	F26T8/CW/4 6PK	24	7500		1275	1085	4100	60					101	
		19	28.0	17704	F28T8/CW/4 6PK	24	7500		1350	1145	4100	60					101	
		19	30.0	10349	F30T8/CW/4	24	7500		1375	1170	4100	60					101	
T12																		
T12	Medium Bi-Pin (G13)	21	30.0	10355	F30T12/CW	24	7500		1350	1220	4100	60					101	
		25	28.0	10282	F25T12CW/28 6PK	24	7500		1550	1390	4100	60					101	
		25	28.0	10286	F25T12/D/28	24	7500		1450	1310	6500	75					101	Daylight
		25	33.0	38201	F25T12/CW/33 6PK	24	7500		1860	1675	4100	60					101	
		25	33.0	10299	F25T12/D/33	24	7500		1600	1440	6500	75					101	Daylight
		25	33.0	10293	F25T12/WW/33	24	7500		1910	1720	3000	52					101	Warm White
Blacklight/Blacklight Blue Lamps																		
Blacklight																		
T8	Medium Bi-Pin (G13)	15	18.0	35884	F15T8/BL 6PK	24	7500									8	105	Blacklight, UVA Source
		17	24.0	72759	F17T8/BLB/6PK	24	7000									8	105	Blacklight Blue, UVA Source, Intergal Dark Blue Filter
T12	Medium Bi-Pin (G13)	20	24.0	10244	F20T12/BL 6PK	24	9000									8	105	Blacklight, UVA Source
		40	22.5	40537	F40BL/U/3	12	14000									8	105	Blacklight, UVA Source, Mod-U-Line®, 3-5/8 Spacing Between Legs
		40	48.0	10526	F40BL 6PK	24	20000									8	105	Blacklight, UVA Source
Blacklight Blue																		
T5	Miniature Bi-Pin (G5)	4	6.0	10019	F4T5/BLB	24	5000									8	101	Blacklight Blue, UVA Source, Integral Dark Blue Filter
		8	12.0	10077	F8T5/BLB	24	5000									8	101	Blacklight Blue, UVA Source, Integral Dark Blue Filter
T8	Medium Bi-Pin (G13)	15	18.0	35885	F15T8/BLB 6PK	24	7500									8	101	Blacklight Blue, UVA Source, Integral Dark Blue Filter
T12	Medium Bi-Pin (G13)	20	24.0	34747	F20T12/BLB 6PK	24	9000									8	101	Blacklight Blue, UVA Source, Integral Dark Blue Filter
		40	48.0	10531	F40BLB 6PK	24	20000									8	101	Blacklight Blue, UVA Source, Integral Dark Blue Filter

For the most up-to-date product information, see www.gelighting.com. To convert inches to millimeters, multiply by 25.4.
All footnotes, warning and caution notices found at the end of this section (page 4-26).

Bulb Shape	Base	Watts	Nominal Length (in)	Order Code	Description	Case Qty	Rated Life (3 hr/ start)	Rated Life (12 hr/ start)	Initial Lumens	Mean Lumens	Color Temp K	CRI	High Color Rendering	Energy Savings	Reduced Wattage	Footnotes	Warning and Caution Notices	Additional Information
Colored Lamps																		
T8																		
T8	Medium Bi-Pin (G13)	32	48.0	94847	F32T8/B/65ECOCVG2	36	20000										103	Sleeved Rosco Blue 65
		32	48.0	94849	F32T8/G/89ECOCVG2	36	20000										103	Sleeved Rosco Green 89
		32	48.0	94850	F32T8/R/24ECOCVG2	36	20000										103	Sleeved Rosco Red 24
T12																		
T12	Medium Bi-Pin (G13)	40	48.0	10514	F40B 6PK	24	20000										101	Phosphor Blue
		40	48.0	10517	F40G 6PK	24	20000										101	Phosphor Green
Preheat																		
T12	Medium Bi-Pin (G13)	20	24.0	10231	F20T12/B 6PK	24	9000										101	Phosphor Blue
		20	24.0	10233	F20T12/G 6PK	24	9000										101	Phosphor Green
Gold Lamps																		
T5																		
T5	Miniature Bi-Pin (G5)	28	45.2	25768	F28T5/GO/CVG	40	20000		1986	1946							103	Gold Sleeved, Blocks UV and Deep Blue Emissions
T8																		
T8	Medium Bi-Pin (G13)	17	24.0	25779	F17T8/GO/ECOCVG	24	15000		970	950							103	Gold Sleeved, Blocks UV and Deep Blue Emissions
		25	36.0	25783	F25T8/GO/ECOCVG	24	15000		1590	1558							103	Gold Sleeved, Blocks UV and Deep Blue Emissions
		32	48.0	25784	F32T8/GO/ECOCVG	36	15000		2280	2235							103	Gold Sleeved, Blocks UV and Deep Blue Emissions
T12																		
T12	Medium Bi-Pin (G13)	40	48.0	25850	F40/GO/CVG	30	20000		2510	2460							103	Gold Sleeved, Blocks UV and Deep Blue Emissions
T12	Single Pin (Fa8)	55	72.0	25854	F72T12/GO/CVG	15	12000		4150	4070							103	Gold Sleeved, Blocks UV and Deep Blue Emissions
		55	96.0	25852	F96T12/GO/CVG	15	12000		5640	5530							103	Gold Sleeved, Blocks UV and Deep Blue Emissions
T12	Recessed Double Contact (R17d)	110	96.0	25853	F96T12/GO/HO/CVG	15	12000		8010	7850							103	Gold Sleeved, Blocks UV and Deep Blue Emissions
Germicidal Lamps																		
T5	Miniature Bi-Pin (G5)	4	6.0	15872	G4T5	24	6000									16	106	Clear, UVC Source
		6	8.0	15873	G6T5	24	6000									16	106	Clear, UVC Source
		8	12.0	11077	G8T5	24	7500									16	106	Clear, UVC Source
		11	9.0	29495	G11T5	24	8000									16	106	Clear, UVC Source
T5	Single Pin (Fa8)	39	36.0	15874	G36T5	24	9000									16	106	Clear, UVC Source
		65	64.0	15864	G64T5	24	9000									16	106	Clear, UVC Source
T5	4-Pin (G10q)	16	13.0	29502	G16T5/4P/SE	24	8000									9,16	106	Clear, UVC Source
		39	34.0	29503	G36T5/4P/SE	24	9000									9,16	106	Clear, UVC Source
		65	64.0	29504	G64T5/4P/SE	24	9000									9,16	106	Clear, UVC Source
T8	Medium Bi-Pin (G13)	9.5	14.0	29498	G10T8	24	6000									16	106	Clear, UVC Source
		15	18.0	11078	G15T8	24	7500									16	106	Clear, UVC Source
		25	18.0	11082	G25T8	24	7500									16	106	Clear, UVC Source
		30	36.0	11080	G30T8	24	7500									16	106	Clear, UVC Source
		36	48.0	29499	G36T8	24	8000									16	106	Clear, UVC Source
		55	36.0	15875	G55T8/HO	24	8000									16	106	Clear, UVC Source
T10	Medium Bi-Pin (G13)	20	24.0	15876	G20T10	24	8000									9,16	106	Clear, UVC Source
Plant and Aquarium/Terrarium Lamps																		
T8																		
18" T8 Lamps																		
T8	Medium Bi-Pin (G13)	15	18.0	22910	F15T8/AR/FS 6PK	24	7500		675		9325	64					104	Aquarium Lamp Freshwater & Saltwater
		15	18.0	49892	F15T8/PL/AQ 6PK	24	7500		510		3100	90	✐				104	Plant & Aquarium Wide Spectrum

For the most up-to-date product information, see www.gelighting.com. To convert inches to millimeters, multiply by 25.4.
All footnotes, warning and caution notices found at the end of this section (page 4-26).

Bulb Shape	Base	Watts	Nominal Length (in)	Order Code	Description	Case Qty	Rated Life (3 hr/ start)	Rated Life (12 hr/ start)	Initial Lumens	Mean Lumens	Color Temp K	CRI	High Color Rendering	Energy Savings	Reduced Wattage	Footnotes	Warning and Caution Notices	Additional Information
Plant and Aquarium/Terrarium Lamps (continued)																		
T12																		
24" T12 Lamps																		
T12	Medium Bi-Pin (G13)	20	24.0	49891	F20T12/PL/AQ/ECO	24	9000		750		3100	90	✐				104	Plant & Aquarium Wide Spectrum
48" T12 Lamps																		
T12	Medium Bi-Pin (G13)	40	48.0	49893	F40PL/AQ/ECO	24	20000		1900		3100	90	✐				104	Plant & Aquarium Wide Spectrum
Export Outside U.S. and Canada Only																		
T12	Medium Bi-Pin (G13)	40	22.5	14496	F40CW/U/6/EX	12	14000		2800	2460	4100	60					102	6" Spacing Between Legs
		40	22.5	14498	F40D/U/6/EX	12	14000		2350	2070	6500	75					102	Daylight, 6" Spacing Between Legs
		40	48.0	14656	F40CW/EX 30PK	30	20000		3050	2680	4100	60					101	
		40	48.0	14488	F40D/EX	30	20000		2550	2240	6500	75					101	Daylight
T12	Single Pin (Fa8)	75	96.0	12541	F96T12CW/EX 15PK	15	12000		6150	5660	4100	60					101	
		75	96.0	12543	F96T12/D/EX 15PK	15	12000		5250	4330	6500	75					101	Daylight
T12	Recessed Double Contact (R17d)	110	96.0	12540	F96T12CW/HO/EX	15	12000		8900	7740	4100	60					101	
		110	96.0	12542	F96T12D/HO/EX15	15	12000		7600	6610	6500	75					101	Daylight
Consumer Products																		
T8																		
4' T8																		
T8	Medium Bi-Pin (G13)	32	48.0	66834	F32T8/KBP/2PK-24	24	20000		2900	2600	3000	80	✐				101	
		32	48.0	66829	F32T8/KBP/ECO/2P	6	20000		2900	2600	3000	80	✐				101	
		32	48.0	66837	F32T8/WS/ECO/2P	24	20000		2900	2600	3500	80	✐				101	
		32	48.0	66826	F32T8/GB/ECO/UPC	36	20000		2900	2600	4100	80	✐				101	
		32	48.0	66833	F32T8/GB/2PK-24	24	20000		2900	2600	4100	80	✐				101	
		32	48.0	66828	F32T8/GB/ECO/2P	6	20000		2900	2600	4100	80	✐				101	
		32	48.0	66836	F32T8/UT/2P-24	24	15000		1800	1600	4100	87	✐				101	
		32	48.0	66827	F32T8/UT/ECO/UPC	36	15000		1800	1600	4100	87	✐				101	
		32	48.0	66831	F32T8/UT/ECO/2P	6	15000		1800	1600	4100	87	✐				101	
		32	48.0	66832	F32T8/CL/2PK-24	24	20000		2900	2600	5000	80	✐				101	
		32	48.0	66835	F32T8/AS/ECO/2P	24	20000		2900	2600	6500	80	✐				101	
		32	48.0	66830	F32T8/AS/2PK-24	6	20000		2900	2600	6500	80	✐				101	
T12																		
4' F40 Ecolux® Standard																		
T12	Medium Bi-Pin (G13)	40	48.0	25399	F40C50/ECO/UPC	30	20000		2250	1870	5000	90	✐				101	Chroma 50
		40	48.0	12224	F40/SUN/ECO/6PK	24	20000		2250	1870	5000	90					101	Sunlight
		40	48.0	66655	F40/KBP/ECO/2P	9	20000		2900	2600	3000	87	✐				101	
		40	48.0	66652	F40/GB/ECO/2P	9	20000		2900	2600	4100	87	✐				101	
		40	48.0	66651	F40/UT/ECO/2P	9	15000		2100	1900	4100	87	✐				101	
		40	48.0	66653	F40/CL/ECO/2P	9	20000		2900	2600	5000	87	✐				101	
		40	48.0	66654	F40/AS/ECO/2P	9	20000		2900	2600	6500	87	✐				101	
		40	48.0	66650	F40UT/ECO/UPC	30	15000		2100	1900	4100	87	✐				101	
Mod-U-Line® Watt-Miser® U-Tubes																		
T12	Medium Bi-Pin (G13)	35	23.0	66851	F35/CX41/U6WMUPC	12	14000		2300	2185	4100	87	✐	$	✈	1	102	
T12 Instant Start																		
4' T12																		
T12	Single Pin (Fa8)	40	48.0	20461	F48T12CW/UPC 6PK	24	9000		2875	2650	4100	60					101	
8' T12 Watt-Miser® Energy Saving Lamps																		
T12	Single Pin (Fa8)	60	96.0	66856	F96T12/XL/HL35/WM/UPC	15	12000		5900	5480	3500	80	✐	$	✈	1	101	
		60	96.0	66852	F96T12/XL/HL41/WM/UPC	15	12000		5900	5480	4100	80	✐	$	✈	1	101	
T12 Rapid Start																		
T12	Medium Bi-Pin (G13)	30	36.0	77119	F30T12/RS/KB/ECO	24	18000		2350	2120	3000	70					104	Kitchen & Bath

For the most up-to-date product information, see www.gelighting.com. To convert inches to millimeters, multiply by 25.4.
All footnotes, warning and caution notices found at the end of this section (page 4-26).

Bulb Shape	Base	Watts	Nominal Length (in)	Order Code	Description	Case Qty	Rated Life (3 hr/ start)	Rated Life (12 hr/ start)	Initial Lumens	Mean Lumens	Color Temp K	CRI	High Color Rendering	Energy Savings	Reduced Wattage	Footnotes	Warning and Caution Notices	Additional Information
Consumer Products (continued)																		
T12 High Output Rapid Start Recessed Double Contact																		
T12	Recessed Double Contact (R17d)	60	48.0	27313	F48T12/CW/HO/UPC	24	12000		4050	3520	4100	60					101	
Preheat																		
T5																		
T5	Miniature Bi-Pin (G5)	4	6.0	15983	F4T5/CW/CB	10	5000		135	100	4100	60					101	Preheat
		6	9.0	15986	F6T5/CW/CB	10	5000		295	235	4100	60					101	Preheat
		8	12.0	67419	F8T5/KB/RVL/CB	10	5000		400	320	2600	75						Reveal
		8	12.0	15987	F8T5/CW/CB	10	5000		400	320	4100	60					101	Preheat
		8	12.0	25425	F8T5/WW/CB	5	5000		410	330	3000	52					101	Preheat, Warm White
		13	21.0	67420	F13T5/KB/RVL/CB	5	5000		880	640	2600	75						Reveal
		13	21.0	49333	F13T5/CW/CB	5	5000		850	705	4100	60					101	
		13	21.0	25426	F13T5/WW/CB	5	5000		870	720	3000	52					101	Preheat, Warm White
T8																		
T8	Medium Bi-Pin (G13)	18	15.0	79043	F15T8/KB/RVL 6PK	24	7500		825	743	2600	60					104	Reveal
		15	18.0	13968	F15T8/SUN 6PK	24	7500		620	525	5000	90	✐				101	Preheat, Sunlight
		15	18.0	21326	F15T8/KB 6PK	24	7500		940	850	3000	70					104	Preheat, Kitchen & Bath
		15	18.0	10143	F15T8/CW 6PK	24	7500		825	725	4100	60					101	Preheat
		30	36.0	22747	F30T8/KB 6PK	24	7500		2125	1910	3000	70					104	Preheat, Kitchen & Bath
T12																		
T12	Medium Bi-Pin (G13)	14	15.0	10117	F14T12/CW 6PK	24			650	550	4100	60					101	Preheat
		14	15.0	22979	F14T12/KB 6PK	24	9000		700	650	3000	70					104	Preheat
		15	18.0	10183	F15T12/CW 6PK	24	9000		760	685	4100	60					104	Preheat, Kitchen & Bath
		15	18.0	22745	F15T12/KB 6PK	24	9000		785	730	3000	70					104	Preheat
		24	20.0	79042	F20T12KB/ECO/RVL	24	9000		1125	1012	2600	60					104	Reveal
		20	24.0	80046	F20T12/CW/ECO 6PK	24	9000		1200	1150	4100	60					101	Preheat
		20	24.0	25575	F20T12/D/ECO/UPC	24	9000		1025	945	6500	75					101	Preheat, Daylight
		20	24.0	21325	F20T12/KB/ECO	24	9000		1275	1200	3000	70					104	Preheat, Kitchen & Bath
		20	24.0	14419	F20T12/SUN/ECO	24	9000		875	790	5000	90	✐				101	Preheat, Sunlight
		20	24.0	25577	F20T12/WW/ECOUPC	24	9000		1250	1150	3000	52					101	Preheat, Warm White
		20	24.0	10231	F20T12/B 6PK	24	9000		450	330							101	Preheat
		20	24.0	10233	F20T12/G 6PK	24	9000		1575	957							101	Preheat
Blacklight																		
T8	Medium Bi-Pin (G13)	15	24.0	35884	F15T8/BL 6PK	24	7500									8	105	Blacklight, UVA Source
T12	Medium Bi-Pin (G13)	20	24.0	10244	F20T12/BL 6PK	24	9000									8	105	Blacklight, UVA Source
		40	40.0	10526	F40BL 6PK	24	20000									8	105	Blacklight, UVA Source
Blacklight Blue																		
T8	Medium Bi-Pin (G13)	15	18.0	35885	F15T8/BLB 6PK	24	7500										101	Blacklight Blue, UVA Source, Integral Dark Blue Filter
T12	Medium Bi-Pin (G13)	20	24.0	34747	F20T12/BLB 6PK	24	9000										101	Blacklight Blue, UVA Source, Integral Dark Blue Filter
T12	Medium Bi-Pin (G13)	40	40.0	10531	F40BLB 6PK	24	20000										101	Blacklight Blue, UVA Source, Integral Dark Blue Filter
T9 Circline®																		
T9	4-Pin (G10q)	20	6.5	42732	FC6T9/CW	12	12000		800	560	4100	60					101	
		22	8.25	33774	FC8T9/CW	12	12000		1100	825	4100	60					101	
		22	8.25	11026	FC8T9/D	12	12000		925	690	6500	75					101	Daylight
		22	8.25	11084	FC8T9/KB	6	12000		1400	1120	3000	82	✐				104	Kitchen & Bath
		32	12.0	33890	FC12T9/CW	12	12000		1950	1460	4100	60					101	
		32	12.0	11039	FC12T9/D	12	12000		1675	1260	6500	75					101	Daylight
		32	12.0	11085	FC12T9/KB	6	12000		2400	1920	3000	82	✐				104	Kitchen & Bath
		40	16.0	33893	FC16T9/CW	12	12000		2700	2030	4100	60					101	
		40	16.0	11052	FC16T9/D	12	12000		2250	1690	6500	75					101	Daylight

For the most up-to-date product information, see www.gelighting.com. To convert inches to millimeters, multiply by 25.4.
All footnotes, warning and caution notices found at the end of this section (page 4-26).

Fluorescent Lamps

Bulb Shape	Base	Watts	Nominal Length (in)	Order Code	Description	Case Qty	Rated Life (3 hr/ start)	Rated Life (12 hr/ start)	Initial Lumens	Mean Lumens	Color Temp K	CRI	High Color Rendering	Energy Savings	Reduced Wattage	Footnotes	Warning and Caution Notices	Additional Information
covRguard® Shatter Resistant																		
T8 Preheat																		
T8	Medium Bi-Pin (G13)	15	18.0	46627	F15T8/KB/CVG/UPC	24	7500		910	825	3000	70				11,13	103	Blocks UV
T12 Rapid Start Watt-Miser®																		
T12	Medium Bi-Pin (G13)	34	48.0	26044	F34CX41WMECOCCVG	30	20000		2400	2130	4100	87	✐	$	✈	1,11,13	101	Blocks UV
T12 Preheat																		
T12	Medium Bi-Pin (G13)	20	24.0	80984	F20T12CWECOCVGUPC	24	9000		1160	1110	4100	60				11,13	103	Blocks UV
Plant and Aquarium / Terrarium																		
T8	Medium Bi-Pin (G13)	15		22910	F15T8/AR/FS 6PK	24	7500		675		9325	64					104	Aquarium Lamp Fresh-water & Saltwater
		15	18.0	49892	F15T8/PL/AQ 6PK	24	7500		510		3100	90					104	Plant & Aquarium Wide Spectrum
T12	Medium Bi-Pin (G13)	20	24.0	22908	F20T12/AR/FR 6PK	24	9000		600		4000	92	✐				104	Aquarium Lamp Freshwater
		20	24.0	49891	F20T12/PL/AQ/ECO	24	9000		750		3100	90	✐				104	Plant & Aquarium Wide Spectrum
		40	48.0	49893	F40PL/AQ/ECO	24	20000		1900		3100	90	✐				104	Plant & Aquarium Wide Spectrum

For the most up-to-date product information, see www.gelighting.com. To convert inches to millimeters, multiply by 25.4.
All footnotes, warning and caution notices found at the end of this section (page 4-26).

Operating Notes

General Operation

GE fluorescent lamps should be used only with auxiliary equipment designed to produce proper characteristics. Specifications for auxiliary equipment are covered by ANSI. Specifications for auxiliary equipment not included in ANSI Standards are available from GE Lighting.

Factors Affecting Lamp Performance

Ballasts

The three basic types of ballasts for fluorescent lamps are Preheat (PH), Instant Start (IS), and Rapid Start (RS). In general, lamps identified as preheat, rapid start or instant start should be used only on the corresponding ballast type. Electronic ballasts are presently available in both instant start and rapid start designs. Ballasts that operate with output currents below recommended levels, either by design or poor performance, will reduce fluorescent lamp life.

Application – Choosing the appropriate ballast for an application can have an impact on lamp life. For example, T8 lamps with electronic Instant Start ballasts should not be used in applications with electronic controls (such as occupancy sensors). The frequent switching will significantly reduce lamp life. Use only programmed rapid start ballasts in these situations.

Operating Characteristics – Fluorescent lamp life is strongly affected by the ballast. ANSI has set standards for fluorescent ballasts that will ensure proper operation of fluorescent lamps. Ballast characteristics that have a significant effect on lamp life are Current Crest Factor, Starting Time, Cathode Voltage and Open Circuit Voltage.

Ballast Factor – This is the percentage of a lamp's rated lumen output that can be expected when operated on a specific, commercially available ballast under laboratory conditions. For example, a ballast having a ballast factor of 0.93 will result in the lamp emitting 93% of its rated lumen output.

High Frequency – All fluorescent lamps operate more efficiently when driven at frequencies greater than 15 kHz. Four-foot fluorescent lamps operate approximately 10% more efficiently, while eight-foot lamps improve efficiency by about 5%. This efficiency improvement is one reason for the popularity of electronic ballasts.

Temperature

Light output and watts of a fluorescent lamp are affected by the ambient temperature, and by drafts. Most fluorescent lamps reach their maximum light output at room temperatures or at "luminaire temperatures." All-Weather fluorescent lamps are designed with jackets that improve performance in low-temperature environments.

Luminaire

The design of the lighting fixture (luminaire) affects the ambient temperature in which the fluorescent lamps will be operating. A fixture that operates too cool or warm will result in lower light output from the lamps and reduce illumination levels.

Starting

The life of a fluorescent lamp is affected by the number of times the lamp is started. Starting results in shorter lamp life, while continuous operation will provide the longest lamp life. All fluorescent lamps, except where noted, have life ratings based on three hours per start.

General Information

Lumens

Nominal Initial Lumens refer to the nominal light output of the lamp after 100 hours of operation at 25° C. **Nominal Mean Lumens** refer to the nominal light output of the lamp at 40% of its rated life. Some values are based on engineering calculations derived from extrapolation of initial measured lumens.

A self-ballasted lamp is measured using its integral ballast. Lamps without an integral ballast are measured using reference ballasts.

Lumens produced by lamps operated on commercial ballasts may not be equivalent to reference ballast ratings. For lighting design calculations, refer to the ballast manufacturer's published data for the appropriate "Ballast Factor."

Nominal Watts

Wattage is classified in accordance with American National Standards Institute standards for lamp classification purposes and may not be the same as the wattage run on a reference ballast. The nominal wattage as defined by ANSI may vary from the listed wattage. Watts consumed by lamps operated on commercial ballasts may not be equivalent to reference ballast ratings.

Rated Life

The rated life (hours) is the approximate median life when lamps are operated for three hours per start under laboratory conditions using an ANSI reference ballast or GE Lighting specifications where no industry standards exist. Some lamps are rated at 12 hours per start where noted.

Performance Notes:

T8 Lamps:

- Rated life for 2 ft through 4 ft. Starcoat® Ecolux® Medium Bi-Pin T8 Lamps is Rated life on programmed rapid start circuits.
- Rated life for the F40T8 is rated life on rapid start circuits. Rated life for these linear lamps on instant start electronic circuits is reduced by 25%.

T12 Lamps:

- Life of 4' T12 lamps on single-lamp, rapid start ballasts may be reduced.

Color Temperature/Chromaticity

Approximate color temperature of fluorescent is measured using industry standard methods and is based on a nominal 40-watt source. Fluorescent sources operating at different lamp currents will have slightly shifted color appearances when compared to the corresponding 40-watt sources.

Scotopic/Photopic Ratio

This measurement accounts for the fact that of the two light sensors in the retina, rods are more sensitive to blue light (Scotopic Vision) and cones to yellow light (Photopic Vision). The Scotopic/Photopic (S/P) Ratio is an attempt to capture the relative strengths of these two responses. S/P is calculated as the ratio of scotopic lumens to photopic lumens, for the light source, on an ANSI reference ballast. Cooler sources (higher color temperature lamps) tend to have higher values of the S/P Ratio compared to warm sources.

Scotopic/Photopic (S/P) Ratio:

This measurement accounts for the fact that of the two light sensors in the retina, rods are more sensitive to blue light (Scotopic vision) and cones to yellow light (Photopic vision). The Scotopic/Photopic (S/P) Ratio is an attempt to capture the relative strengths of these two responses. Cooler sources (higher color temperature lamps) tend to have higher values of the S/P Ratio compared to warm sources.

T5	S/P Ratio
830	1.3
835	1.5
841	1.7
850	1.9
865	2.2
F28T8	**S/P Ratio**
SP30	1.3
SP35	1.5
SP41	1.8
SP50	2.0

F17 and F25T8	S/P Ratio
SP30	1.3
SP35	1.4
SP41	1.6
F17 and F25T8	**S/P Ratio**
SPX30	1.3
SPX35	1.5
SPX41	1.8
SPX50	2.0
SPX65	2.3

F32 and F32T8/WM	S/P Ratio
SP30	1.3
SP35	1.4
SP41	1.6
SP50	1.9
SP65	2.1
F32T8 and F32T8/HL	**S/P Ratio**
SPX30	1.3
SPX35	1.5
SPX41	1.8
SPX50	2.0
SPX65	2.3

Footnotes

1 Watt-Miser®, Watt-Miser® Plus, F28T8, F32T8/25W and Energy Efficient (/EE) lamps are intended for use where ambient temperatures are 60°F (16°C) or higher and where the lamp surface is protected from strong air drafts. Failure to protect the lamp surface may result in reduced life, poor starting or erratic operation, such as flickering or spiraling. These lamps are not recommended for use with dimming systems. All T12 Watt-Miser® lamps are intended for use on two-lamp, indoor, lead, high power factor ballasts and are not recommended for use with dimming or reduced current systems. The use of T12 Watt-Miser® lamps on single lamp ballasts may shorten lamp life. T12 Rapid Start Watt-Miser® lamps are intended for use only with Rapid Start Ballasts. F34 Rapid Start Watt-Miser® lamps on high frequency electronic systems may display erratic starting before end of life. T8 Watt-Miser® lamps and F28UMX lamps are intended for use only with instant start ballasts. They are, however, also approved for use on GE UltraStart® programmed rapid start ballasts.

3 F40T17/CW/IS lamps are for use only in fixtures equipped with instant start ballasts.

4 Because Power Groove® and Very High Output lamps are most used in commercial applications, the life rating is based on 12 hrs. per start.

6 Bare "Cold Temperature" lamps (as indicated by /CT) and "All Temperature" lamps are designed for use where ambient temperatures drop below 60°F (16°C).

7 Performance data based on engineering estimates.

8 ⚠ **CAUTION:** Risk Group 1 (Low Risk): UV emitted from this lamp. Skin or eye irritation could result. Minimize exposure.

9 ⚠ **WARNING:** Risk Group 3 (High Risk): UV emitted from this lamp. Avoid exposure of eyes and skin to unshielded lamp. Skin or eye injury will result.

10 Shoplites are not recommended to be used on F40 full light output ballasts. Life will be reduced by approximately 50%.

11 Lumen rating based on approximate 3% reduction in light output with covRguard® sleeving.

12 Do not use covRguard® HO lamps in watertight or airtight fixtures.

13 Blocks 100% of UV-B and UV-C. Blocks from 75 to 99% of UV-A, depending on lamp type.

14 Life rating is based on 12 hrs. per start.

15 Lumen rating based on approximate 3% reduction in light output with jacket.

16 Life rating is based on UV maintenance curve and is measured at 80% of initial (100hr) UVC output.

17 Jacketed "Cold Temperature" lamps (as indicated by -CT) are designed for use where ambient temperatures do not rise above 32°F (0°C).

18 T8 lamps run on Instant Start ballasts should not be used in conjunction with electronic controls such as occupancy sensors. The frequent switching will significantly impact lamp life and void any warranties. Programmed Rapid Start ballasts such as GE's UltraStart® ballast should be used in these situations.

19 T5 Starcoat® Ecolux® lamp initial and mean lumen ratings are taken at 95°F (35°C)

20 Rated life is given for programmed start ballasts. Life ratings are based on engineering data with lamps cycled every 3 or 12 operating hours. Lamp life is approximately 25% shorter on instant start ballasts as compared to programmed start ballasts.

21 Rated life is given for programmed start ballasts. Life ratings are based on engineering data with lamps cycled every 3 or 12 operating hours. See chart on page 4-4 for more details.

Warning and Caution Notices

101

⚠ WARNING

Risk of electric shock

- Turn power off before inspection, installation or removal

⚠ CAUTION

Lamp may shatter and cause injury if broken

- Wear safety glasses and gloves when handling lamp
- Do not use excessive force when installing lamp

102

⚠ WARNING

Risk of electric shock

- Turn power off before inspection, installation or removal

⚠ CAUTION

Improper handling may cause breakage

- Do not carry lamp by bracket

Lamp may shatter and cause injury if broken

- Wear safety glasses and gloves when handling lamp
- Do not use excessive force when installing lamp

103

⚠ WARNING

Risk of electric shock

- Turn power off before inspection, installation or removal

104

⚠ WARNING

Risk of electric shock

- Turn power off before inspection, installation or removal
- Avoid direct water/liquid contact

⚠ CAUTION

Lamp may shatter and cause injury if broken

- Wear safety glasses and gloves when handling lamp
- Do not use excessive force when installing lamp

105

⚠ WARNING

Risk of electric shock

- Turn power off before inspection, installation or removal

⚠ CAUTION

Lamp emits UV radiation which may cause eye/skin irritation. RG-1

- Minimize exposure

Lamp may shatter and cause injury if broken

- Wear safety glasses and gloves when handling lamp
- Do not use excessive force when installing lamp

106

⚠ WARNING

Risk of electric shock

- Turn power off before inspection, installation or removal

Lamp emits UV radiation which may cause eye/skin injury. RG-3

- Avoid exposure of eyes and skin to unshielded lamp

⚠ CAUTION

Lamp may shatter and cause injury if broken

- Wear safety glasses and gloves when handling lamp
- Do not use excessive force when installing lamp

107

⚠ WARNING

Risk of electric shock

- Turn power off before inspection, installation or removal
- Do not open – there are no serviceable parts inside
- Do not drill or cut into plastic parts
- Avoid direct water/liquid contact
- Fully insert plug
- Use indoors only

⚠ CAUTION

Lamp may shatter and cause injury if broken

- Wear safety glasses and gloves when handling lamp
- Lamp is not replaceable. Do not attempt to remove lamp from fixture
- Use in permanent installation only — not for portable use

Unit will fail if not installed properly

- Follow installation instructions

108

⚠ WARNING

Risk of electric shock

- Turn power off before inspection, installation or removal
- Avoid direct water/liquid contact

Notes

Compact Fluorescent Lamps

Bulb Identification

NOMINAL LENGTH:
Overall length including base or pins.

Note: Lamp drawings are not drawn to scale. Be sure to check size and dimension information when identifying each lamp.

To convert inches to millimeters, multiply the dimension (in inches) by 25.4 (i.e. 1.5" x 25.4 = 38.1 mm).

Lamp Locator

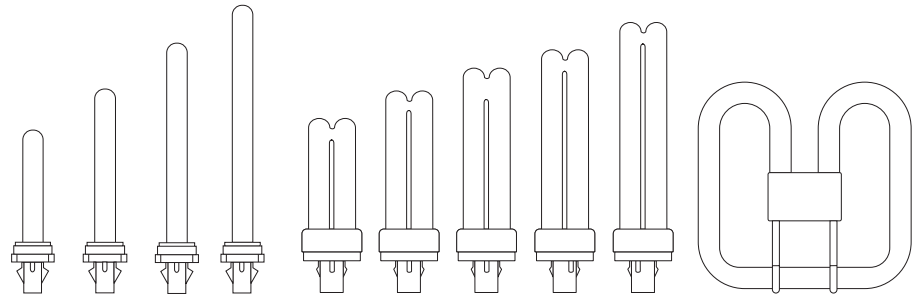

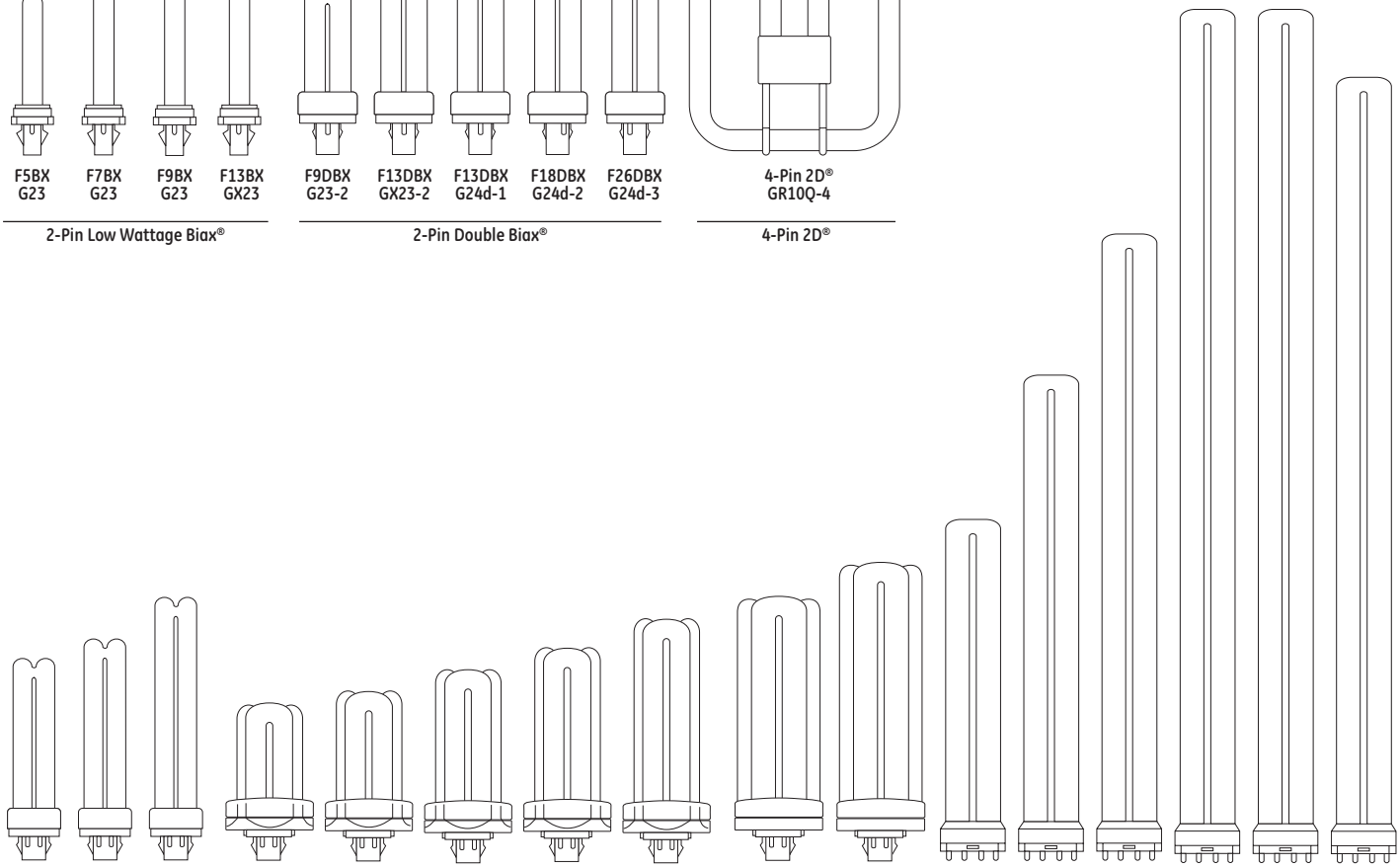

Plug-in Lamps

Lamp Locator (continued)

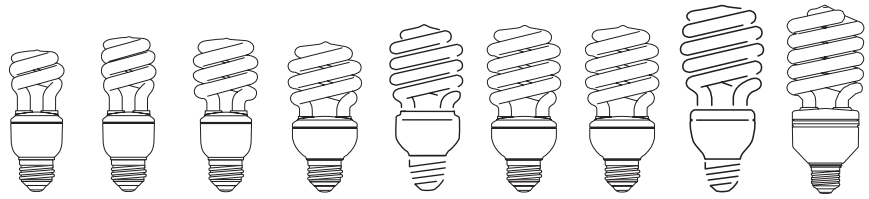

FLE9/10HT3 Med | FLE13HT3 Med | FLE14/15HT3 Med | FLE20HT3 Med | FLE23HT3 Med | FLE26HT3 Med | FLE29HT3 Med | FLE32HT3 Med | FLE42HLX Med

Spiral® T3

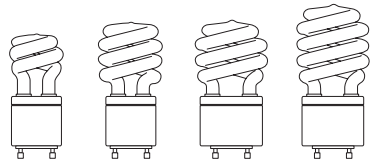

FLE10HT3 Med | FLE15HT3 Med | FLE20HT3 Med | FLE26HT3 Med

GU 24

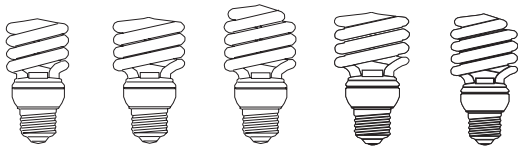

FLE10HT2 Med | FLE13HT2 Med | FLE15HT2 Med | FLE20HT2 Med | FLE26HT2 Med

Spiral® T2

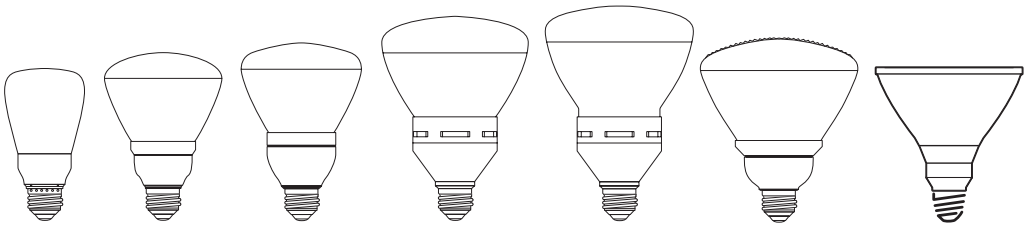

FLE11/R20 Med | FLE15/R30 Med | FLE15/R30 Dimming Med | FLE26/R40 Med | FLE26/R40 Dimming Med | FLE26/PAR38 Med | FLE24/PAR38 Med

Reflectors

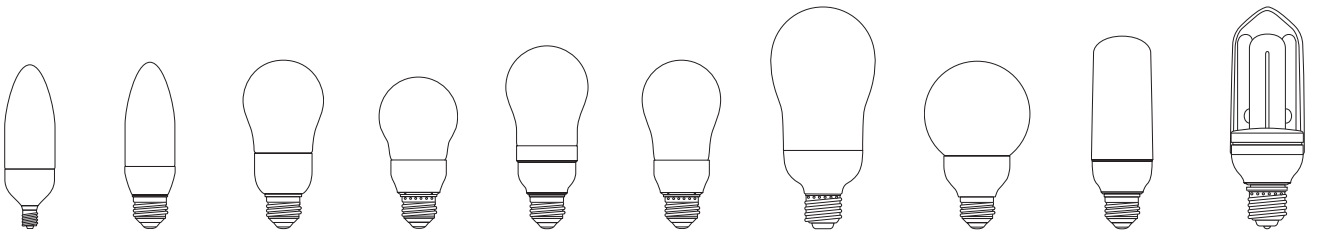

Candle E12 | Candle Med | FLE11/ A-Line Med | FLE12/ A-Line Med | FLE14/ A-Line Med | FLE15/ A-Line Med | FLE20/ A-Line Med | FLE9/ Globe Med | FLE11/ Bug/Post Light Med | FLE15/ Bug/Post Light Med

Decorative Shapes

FLE9/ A-Line Med

Instant Bright

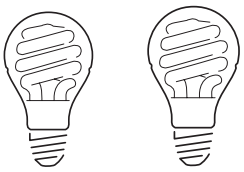

FLE15/ A-Line Med | FLE20/ A-Line Med

Bright From The Start®

Self-Ballasted Lamps

For the most up-to-date product information, see www.gelighting.com.

Compact Fluorescent Lamps

Base Identification

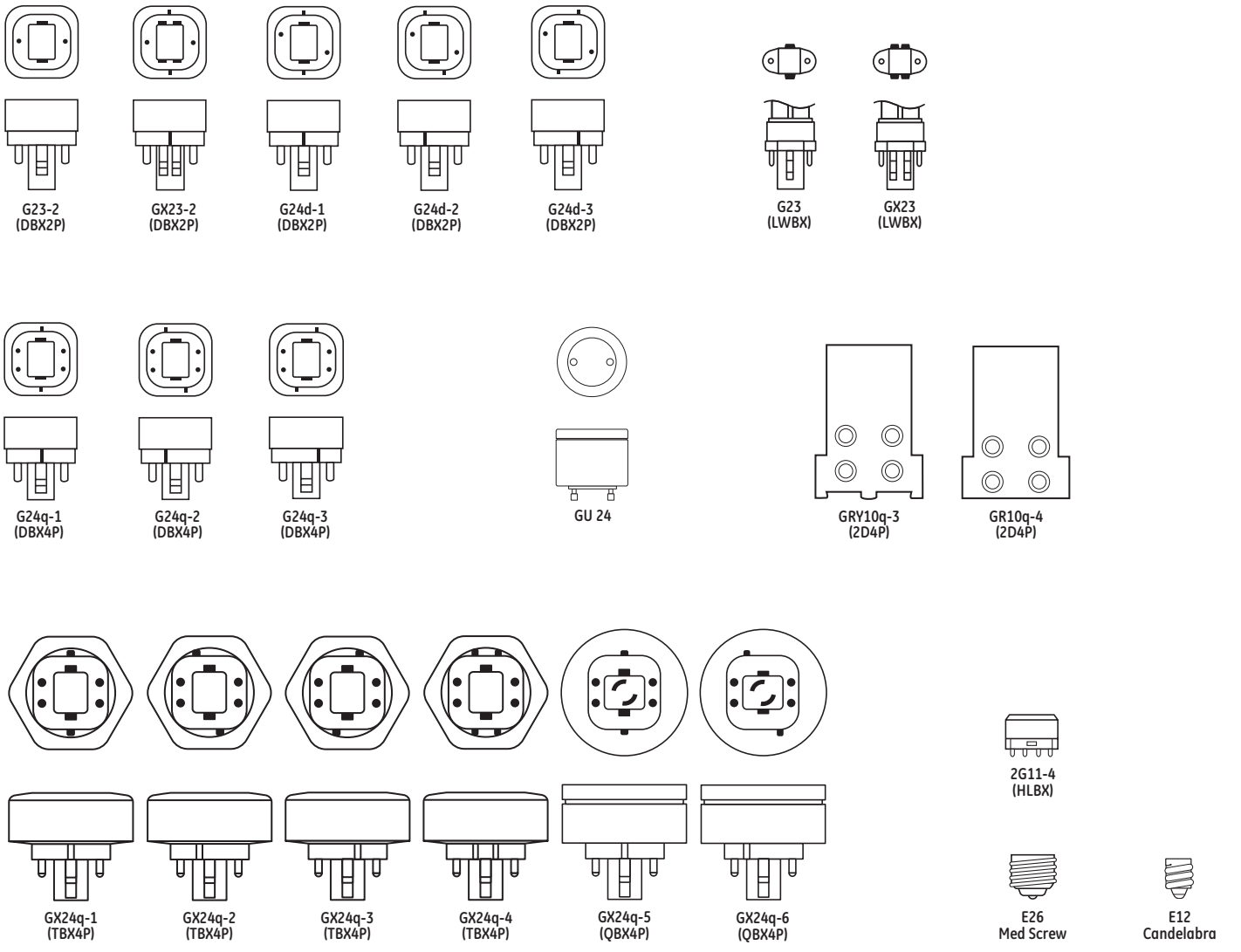

Introduction

GE Compact Fluorescent lamps offer many advantages:

- Dramatic energy cost savings...up to 77% vs. incandescent lamps of comparable light output
- Extra long life...most last 8 to 10 times longer, and some last up to 20 times longer, than standard incandescent lamps
- High light output comparable to, and in many cases exceeding, incandescent lamps replaced
- Excellent color rendering...rare earth tri-phosphor provides such high-quality color you won't believe it's fluorescent. Most types offer a choice of color options, from warm to cool, to let you select the tone and atmosphere you need.
- A choice of wattages, shapes and sizes to meet your lighting needs. Designed to fit everything from table lamps to wall sconces and ceiling fixtures.
- Many lamps use amalgam technology which provides stable lumen performance when operated in any position, over a wider range of ambient temperatures.

Compact Fluorescent Brand Name Cross-Reference

GE	OSRAM/SYLVANIA	PHILIPS
2D®	—	—
Biax®	Dulux® S	PL-S
High Lumen Biax®	Dulux® L	PL-L
Double Biax®	Dulux® D, D/E	PL-C
Triple Biax®	Dulux® T/E	PL-T
Quad Biax®	—	—
High Output Biax®	—	PL-H
Spiral®	Dulux® EL Twist	EL Twist

ATTENTION: This brand-name cross-reference chart is provided only as a quick reference. Other lamp company brand listings may only represent a near equivalent, versus an identical match to GE Lighting brands. Individual lamp manufacturers' performance specifications should be consulted. Lamp performance may be affected by environmental conditions, ballast type and/or other auxiliary equipment.

Product Information

Plug-in Lamps

2-Pin Low Wattage Biax® (pg 5-7)

- Compact size offers fixture and design flexibility
- GX23 and G23 bases are preheat lamps with internal starters
- 13-watt version also available with internal electronic starter, providing flicker-free instant on
- Available in warm and cool color temperatures
- TCLP Compliant

4-Pin High Lumen Biax® (pg 5-7)

- Available in a range of sizes and wattages for innovative compact luminaires
- High efficiency and outstanding performance in fixtures make them ideal for 2X2, 1X1 and indirect fixtures
- Available in warm to cool color temperatures; excellent color rendering

2-Pin Double Biax® (pg 5-8)

- More compact than low-wattage Biax® CFLs with higher lumen output—suitable for a broad range of applications
- Preheat lamps with starters; not suitable for use with dimming ballasts
- 26-watt version also available with internal electronic starter, providing flicker-free instant on
- Available in warm to cool color temperatures
- TCLP Compliant

4-Pin Double Biax® (pg 5-8)

- More compact than low-wattage Biax® CFLs with higher lumen output—suitable for a broad range of applications
- Dimmable and compatible with electronic ballasts
- Available in warm to cool color temperatures
- TCLP Compliant

4-Pin Triple Biax® (pg 5-8)

- GE's shortest, most compact Biax® lamp. 17-31% shorter than similar wattage Double Biax® lamps.
- 4-Pin, dimmable and compatible with electronic ballasts
- Available in a wide range of wattages: from 13 to 42 watts
- Available in warm to cool color temperatures
- TCLP Compliant

4-Pin High Output Biax® (pg 5-9)

- GE's highest light output compact fluorescent lamps
- High efficacy 72-75 LPW
- Dimmable, available in 5 colors (2,700 to 5,000K)
- Suitable for high-bay lighting
- TCLP Compliant

4-Pin 2D® (pg 5-9)

- Unique shape suitable for broad range of applications
- Uniform light distribution
- High light output – up to 200W incandescent equivalent

Self-Ballasted Lamps

Spiral® (pg 5-11)

- Long life – up to 12,000 hours or more
- One-piece unit screws directly into incandescent sockets
- Wide variety of wattages to meet application needs
- T2 & T3 Spiral® CFLs provide economical solution with small overall size
- The 42-watt T4 Spiral® CFL provides a 150W incandescent replacement in the smallest possible size (fits an 8.5" harp)
- Color-enhanced CFL Reveal® mimics the color of incandescent and halogen Reveal® lamps

3-Way (pg 5-12)

- T3 and T4 lamps available

GU 24 (pg 5-12)

- Long life – 10,000 hour rating
- Simple twist and lock design allows quick and easy lamp change
- Fits all fixtures with GU 24 base

Reflectors/Indoor PAR (pg 5-12)

- R20, R30, R40 and PAR38 glass reflectors available to meet application needs
- Medium based; fits most incandescent reflector applications
- R30 and R40 lamps available with dimming functionality

Decorative Shapes (pg 5-13)

- Variety of shapes (A-Line, Bullet, Candle, Globe, and Post) and wattages to meet all needs
- One-piece unit screws directly into incandescent sockets
- Candle-shaped CFLs available in both medium base and candelabra base

Specialty (pg 5-14)

- T3 13-watt Spiral® CFLs are available in green, red, blacklight, orange, yellow and blue

Headings in this catalog section

The following terms and descriptions can help you when checking Compact Fluorescent lamp specifications and when ordering products. Within each product line, lamps are divided into families, within these families, lamps are then listed by wattage.

Light Output – Mean Lumens: Lamp light output (lumens) at 40% of rated lamp life.

Light Output – Initial Lumens: Light output (as defined by FTC Lamp Label Rules) is rated average lumens.

Color Temperature – Kelvins (K): A measure of the visual "warmth" or "coolness" of the light from the lamp. The higher the value, the whiter or "cooler" the light appears.

Rated Life @ 3hrs. per start

Rated Life @ 12hrs. per start

Rated Life – Hours: Life (as defined by FTC Lamp Label Rules) is rated life in hours.

Color Rendering Index (CRI or R_a): An indication of the ability of the lamp to render object colors in a normal, natural way. The higher the number (0-100), the better the color appearance.

Energy Used – Nominal Watts: Energy Used (as defined by FTC lamp label rules). To estimate energy consumption (kWh), multiply watts x hours of use and divide by 1000.

Minimum Starting Temperature: The minimum ambient temperature at which the lamp will start reliably.

Volt: Rated voltage.

Power Factor (PF): The ratio of total watts to total volt-amperes. A value of .5 to .6 is typical for CFLs.

Nominal Length: Lamp length including base and/or pins.

Case Quantity: Number of product units packed in a case.

Total Harmonic Distortion (THD): A measure (in percent) of power quality. Indicates the distortion of the alternating current wave form.

Additional Information: Typical application and/or other important information.

Order Code: It is important to use this five-digit code when ordering to ensure that you receive the exact product you require.

Caution Notice: Related cautions, see page 5-15.

Base: The type of base.

Description: The lamp's identification code.

Footnotes: See page 5-15 for more information.

Base	Watts	Nominal Length (in)	Order Code	Description	Case Qty	Volts	Rated Life (hrs)	Initial Lumens	Mean Lumens	Color Temp K	CRI	Min. Start. Temp (°F)	Power Fact.	THD	TCLP Compliant Plug-Ins	EOL Protection Plug-Ins	Additional Information	Caution Notice	Footnotes
Self-Ballasted Lamps																			
Spiral®																			
Med	10	4.4	15829	FLE10HT3/2/827	10	120	8000	520	420	2700	82	5	0.6	120			T3 Spiral®, Boxed	153	1,7,8,9,10

FL E 10 HT3 / 2 / 827

- FL: Identifies as Fluorescent Lamp
- E: Electronically ballasted
- 10: Identifies wattage
- HT3: Identifies lamp shape
- 2: Identifies additional information
- 827: Identifies lamp's finish or color

WHEN YOU DON'T KNOW THE LAMP DESCRIPTION

1. Identify bulb shape next to lamp information.
2. Measure bulb diameter using ruler in appendix section page D-1 to determine width in eighths of an inch.
3. Identify base type using table on page 5-4.
4. Find your lamp in the table containing the bulb shape, size and base.

Base	Watts	Nom. Length (in)	Order Code	Description	Case Qty	Rated Life (hrs)	Initial Lumens	Mean Lumens	Color Temp K	CRI	Min Starting Temp (°F)	TCLP Compliant Plug-Ins	EOL Protection Plug-Ins	Additional Information	Caution Notice	Footnotes
Plug-in Lamps																
2-Pin Low Wattage Biax®																
G23	5	4.2	97551	F5BX/827/ECO	100	10000	265	220	2700	82	0	✹			151	1,2
	5	4.2	97553	F5BX/841/ECO	100	10000	265	220	4100	82	0	✹			151	1,2
	7	5.3	97554	F7BX/827/ECO	100	10000	425	350	2700	82	0	✹			151	1,2
	7	5.3	97556	F7BX/835/ECO	100	10000	425	350	3500	82	0	✹			151	1,2
	7	5.3	97557	F7BX/841/ECO	100	10000	425	350	4100	82	0	✹			151	1,2
	9	6.6	97558	F9BX/827/ECO	100	10000	600	500	2700	82	0	✹			151	1,2
	9	6.6	97560	F9BX/835/ECO	100	10000	600	500	3500	82	0	✹			151	1,2
	9	6.6	97561	F9BX/841/ECO	100	10000	600	500	4100	82	0	✹			151	1,2
GX23	13	7.0	97573	F13BX/827/ECO	100	10000	825	710	2700	82	32	✹			151	1,2
	13	7.0	97574	F13BX/830/ECO	100	10000	825	710	3000	82	32	✹			151	1,2
	13	7.0	97569	F13BX/835/ECO	100	10000	825	710	3500	82	32	✹			151	1,2
	13	7.0	97571	F13BX/841/ECO	100	10000	825	710	4100	82	32	✹			151	1,2
	13	7.0	97572	F13BX/850/ECO	100	10000	784	675	5000	80	32	✹			151	1,2
	13	7.0	97563	F13BX/E/830/ECO	100	10000	825	710	3000	82	-4	✹		Internal Electronic Starter	151	1,2
4-Pin High Lumen Biax®																
2G11	18	9.0	16649	F18BX/SPX30 10PK	40	10000	1200	1080	3000	82	25				151	1,2,4,6
	18	9.0	16053	F18BX/SPX35 10PK	40	10000	1200	1080	3500	82	25				151	1,2,4,6
	18	9.0	16940	F18BX/SPX41 10PK	40	10000	1200	1080	4100	82	25				151	1,2,4,6
	18	10.0	17174	F18BXSPX30RS10PK	40	20000	1250	1130	3000	82	50				151	1,2,6,13
	18	10.5	17175	F18BXSPX35RS10PK	40	20000	1250	1130	3500	82	50				151	1,2,6,13
	18	10.5	12521	F18BX/SPX65/RS	40	20000	1160	1050	6500	82	50				151	1,2,6,13
	27	12.8	16944	F27BXSPX30RS10PK	40	12000	1800	1620	3000	82	50				151	1,2,6,13
	27	12.8	16948	F27BXSPX35RS10PK	40	12000	1800	1620	3500	82	50				151	1,2,6,13
	27	12.8	16951	F27BXSPX41RS10PK	40	12000	1800	1620	4100	82	50				151	1,2,6,13
	39	16.5	16538	F39BXSPX30RS10PK	40	12000	2850	2510	3000	82	50				151	1,2,6,13
	39	16.5	15867	F39BXSPX35RS10PK	40	12000	2850	2510	3500	82	50				151	1,2,6,13
	39	16.5	16952	F39BXSPX41RS10PK	40	12000	2850	2510	4100	82	50				151	1,2,6,13
	40	22.5	16953	F4030BXSPX30 10P	40	20000	3150	2840	3000	82	50				151	1,2,6,13
	40	22.5	20444	F40/30BXSPX30-36	36	20000	3150	2840	3000	82	50			Bulk Pack	151	1,2,6,13
	40	22.5	16648	F40/30BX/SPX35	40	20000	3150	2840	3500	82	50				151	1,2,6,13
	40	22.5	20446	F40/30BXSPX35-36	36	20000	3150	2840	3500	82	50			Bulk Pack	151	1,2,6,13
	40	22.5	16954	F40/30BX/SPX41	40	20000	3150	2840	4100	82	50				151	1,2,6,13
	40	22.5	20447	F40/30BXSPX41-36	36	20000	3150	2840	4100	82	50			Bulk Pack	151	1,2,6,13
	40	22.5	10490	F40/30BX/SPX50RS	36	20000	2900	2700	5000	80	50			Bulk Pack	151	1,2,6,13
	25	21.5	75399	F40/25BX830/IS/WM	40	20000	2600	2400	3000	82	50				151	1,2,6,13
	25	21.5	75400	F40/25BX835/IS/WM	40	20000	2600	2400	3500	82	50				151	1,2,6,13
	25	21.5	75401	F40/25BX840/IS/WM	40	20000	2600	2400	4100	82	50				151	1,2,6,13
	25	21.5	75402	F40/25BX850/IS/WM	40	20000	2600	2400	5000	82	50				151	1,2,6,13
	50	22.5	20898	F50BXSPX30RS10PK	40	20000	4000	3400	3000	82	50				151	1,2,6,13
	50	22.5	20899	F50BXSPX35RS10PK	40	20000	4000	3400	3500	82	50				151	1,2,6,13
	50	22.5	20900	F50BXSPX41RS10PK	40	20000	4000	3400	4100	82	50				151	1,2,6,13
	55	20.7	31951	F55BX/830	25	20000	4800	4080	3000	82	50				151	1,2,6,13
	55	20.7	31952	F55BX/835	25	20000	4800	4080	3500	82	50				151	1,2,6,13
	55	20.7	31953	F55BX/840	25	20000	4800	4080	4100	82	50				151	1,2,6,13

For the most up-to-date product information, see www.gelighting.com. To convert inches to millimeters, multiply by 25.4.
All footnotes and caution notices found at the end of this section (page 5-15).

Compact Fluorescent Lamps

Base	Watts	Nom. Length (in)	Order Code	Description	Case Qty	Rated Life (hrs)	Rated Life @ 12 Hrs	Initial Lumens	Mean Lumens	Color Temp K	CRI	Min Starting Temp (°F)	TCLP Compliant Plug-Ins	EOL Protection Plug-Ins	Additional Information	Caution Notice	Footnotes
Plug-in Lamps (continued)																	
2-Pin Double Biax®																	
G23-2	9	5.5	97576	F9DBX23/827/ECO	50	12000		550	470	2700	82		✸			151	1,2,17
	9	5.5	97575	F9DBX23/841/ECO	50	12000		550	470	4100	82		✸			151	1,2,17
GX23-2	13	4.7	97586	F13DBX23/827/ECO	50	12000		810	685	2700	82		✸			151	1,2,17
	13	4.7	97587	F13DBX23/830/ECO	50	12000		810	685	3000	82		✸			151	1,2,17
	13	4.7	97588	F13DBX23/835/ECO	50	12000		810	685	3500	82		✸			151	1,2,17
	13	4.7	97589	F13DBX23/841/ECO	50	12000		810	685	4100	82		✸			151	1,2,17
G24d-1	13	5.3	97590	F13DBX/827/ECO	50	12000		900	755	2700	82		✸			151	1,2,17
	13	5.3	97591	F13DBX/830/ECO	50	12000		900	755	3000	82		✸			151	1,2,17
	13	5.3	97592	F13DBX/835/ECO	50	12000		900	755	3500	82		✸			151	1,2,17
	13	5.3	97593	F13DBX/841/ECO	50	12000		900	755	4100	82		✸			151	1,2,17
G24d-2	18	6.1	97577	F18DBX/827/ECO	50	12000		1250	980	2700	82		✸			151	1,2,5,17
	18	6.1	97578	F18DBX/830/ECO	50	12000		1250	980	3000	82		✸			151	1,2,5,17
	18	6.1	97579	F18DBX/835/ECO	50	12000		1250	980	3500	82		✸			151	1,2,5,17
	18	6.1	97580	F18DBX/841/ECO	50	12000		1250	980	4100	82		✸			151	1,2,5,17
G24d-3	26	6.7	97606	F26DBX/827/ECO	50	12000		1710	1460	2700	82		✸			151	1,2,17
	26	6.7	97607	F26DBX/830/ECO	50	12000		1710	1460	3000	82		✸			151	1,2,17
	26	6.7	97608	F26DBX/835/ECO	50	12000		1710	1460	3500	82		✸			151	1,2,17
	26	6.7	97609	F26DBX/841/ECO	50	12000		1710	1460	4100	82		✸			151	1,2,17
	26	6.7	97602	F26DBX/E/827/ECO	50	10000		1710	1460	2700	82		✸		Internal Electronic Starter	151	1,2,15,17
	26	6.7	97604	F26DBX/E/835/ECO	50	10000		1710	1460	3500	82		✸		Internal Electronic Starter	151	1,2,15,17
4-Pin Double Biax®																	
G24q-1	13	5.0	97594	F13DBX/827/ECO4P	50	17000	20000	900	755	2700	82		✸	▲		151	1,2,6,17,18
	13	5.0	97595	F13DBX/830/ECO4P	50	17000	20000	900	755	3000	82		✸	▲		151	1,2,6,17,18
	13	5.0	97596	F13DBX/835/ECO4P	50	17000	20000	900	755	3500	82		✸	▲		151	1,2,6,17,18
	13	5.0	97597	F13DBX/841/ECO4P	50	17000	20000	900	755	4100	82		✸	▲		151	1,2,6,17,18
G24q-2	18	5.8	97598	F18DBX/827/ECO4P	50	17000	20000	1250	970	2700	82		✸	▲		151	1,2,5,6,17,18
	18	5.8	97599	F18DBX/830/ECO4P	50	17000	20000	1250	970	3000	82		✸	▲		151	1,2,5,6,17,18
	18	5.8	97600	F18DBX/835/ECO4P	50	17000	20000	1250	970	3500	82		✸	▲		151	1,2,5,6,17,18
	18	5.8	97601	F18DBX/841/ECO4P	50	17000	20000	1250	970	4100	82		✸	▲		151	1,2,5,6,17,18
G24q-3	26	6.4	97610	F26DBX/827/ECO4P	50	17000	20000	1800	1530	2700	82		✸	▲		151	1,2,6,17,18
	26	6.4	97611	F26DBX/830/ECO4P	50	17000	20000	1800	1530	3000	82		✸	▲		151	1,2,6,17,18
	26	6.4	97612	F26DBX/835/ECO4P	50	17000	20000	1800	1530	3500	82		✸	▲		151	1,2,6,17,18
	26	6.4	97613	F26DBX/841/ECO4P	50	17000	20000	1800	1530	4100	82		✸	▲		151	1,2,6,17,18
4-Pin Triple Biax®																	
GX24q-1	13	4.2	97623	F13TBX827/4P/ECO	10	17000	20000	900	755	2700	82		✸	▲	Non-Amalgam	151	1,2,6,17,18
	13	4.2	97619	F13TBX/827/A/ECO	10	17000	20000	900	755	2700	82		✸	▲		151	1,2,6,12,17,18
	13	4.2	97620	F13TBX/830/A/ECO	10	17000	20000	900	755	3000	82		✸	▲		151	1,2,6,12,17,18
	13	4.2	97621	F13TBX/835/A/ECO	10	17000	20000	900	755	3500	82		✸	▲		151	1,2,6,12,17,18
	13	4.2	97622	F13TBX/841/A/ECO	10	17000	20000	900	755	4100	82		✸	▲		151	1,2,6,12,17,18
GX24q-2	18	4.8	97628	F18TBX827/4P/ECO	10	17000	20000	1200	1010	2700	82		✸	▲	Non-Amalgam	151	1,2,6,17,18
	18	4.8	97624	F18TBX/827/A/ECO	10	17000	20000	1200	1010	2700	82		✸	▲		151	1,2,6,12,17,18
	18	4.8	97625	F18TBX/830/A/ECO	10	17000	20000	1200	1010	3000	82		✸	▲		151	1,2,6,12,17,18
	18	4.8	97626	F18TBX/835/A/ECO	10	17000	20000	1200	1010	3500	82		✸	▲		151	1,2,6,12,17,18
	18	4.8	97627	F18TBX/841/A/ECO	10	17000	20000	1200	1020	4100	82		✸	▲		151	1,2,6,12,17,18
GX24q-3	26	5.2	97618	F26TBX827/4P/ECO	10	17000	20000	1800	1530	2700	82		✸	▲	Non-Amalgam	151	1,2,6,17,18
	26	5.2	97614	F26TBX/827/A/ECO	10	17000	20000	1800	1530	2700	82		✸	▲		151	1,2,6,12,17,18
	26	5.2	97615	F26TBX/830/A/ECO	10	17000	20000	1800	1530	3000	82		✸	▲		151	1,2,6,12,17,18
	26	5.2	97616	F26TBX/835/A/ECO	10	17000	20000	1800	1530	3500	82		✸	▲		151	1,2,6,12,17,18
	26	5.2	97617	F26TBX/841/A/ECO	10	17000	20000	1800	1530	4100	82		✸	▲		151	1,2,6,12,17,18

For the most up-to-date product information, see www.gelighting.com. To convert inches to millimeters, multiply by 25.4.
All footnotes and caution notices found at the end of this section (page 5-15).

Plug-in Lamps (continued)

Base	Watts	Nom. Length (in)	Order Code	Description	Case Qty	Rated Life (hrs)	Rated Life 12 Hrs	Life In Years	Energy Cost $/Year	Initial Lumens	Mean Lumens	Color Temp K	CRI	Min Starting Temp (°F)	TCLP Compliant Plug-Ins	EOL Protection Plug-Ins	Additional Information	Caution Notice	Footnotes
4-Pin Triple Biax® (continued)																			
GX24q-3 	32	5.5	97629	F32TBX/827/A/ECO	10	17000	20000			2400	2040	2700	82		✹	▲		151	1,2,6,12,17,18
	32	5.5	97630	F32TBX/830/A/ECO	10	17000	20000			2400	2040	3000	82		✹	▲		151	1,2,6,12,17,18
	32	5.5	97631	F32TBX/835/A/ECO	10	17000	20000			2400	2040	3500	82		✹	▲		151	1,2,6,12,17,18
	32	5.5	97632	F32TBX/841/A/ECO	10	17000	20000			2400	2040	4100	82		✹	▲		151	1,2,6,12,17,18
	32	5.5	65337	F32TBX/850/A/ECO	10	17000	20000			2400	2040	5000	82			▲			
GX24q-4 	42	6.4	97633	F42TBX/827/A/ECO	10	17000	20000			3200	2690	2700	82		✹	▲		151	1,2,6,12,17,18
	42	6.4	97634	F42TBX/830/A/ECO	10	17000	20000			3200	2690	3000	82		✹	▲		151	1,2,6,12,17,18
	42	6.4	97635	F42TBX/835/A/ECO	10	17000	20000			3200	2690	3500	82		✹	▲		151	1,2,6,12,17,18
	42	6.4	97636	F42TBX/841/A/ECO	10	17000	20000			3200	2690	4100	82		✹	▲		151	1,2,6,12,17,18
	42	6.4	65338	F42TBX/850/A/ECO	10	17000	20000			3200	2690	5000	82			▲			
4-Pin High Output Biax®																			
GX24q-5 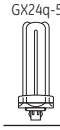	57	7.1	48861	F57QBX827A4P/EOL	10	17000	20000			4300	3700	2700	82		✹	▲		151	1,2,6,12,17,18
	57	7.1	48863	F57QBX835A4P/EOL	10	17000	20000			4300	3700	3500	82		✹	▲		151	1,2,6,12,17,18
	57	7.1	48864	F57QBX/841/A/ECO	10	17000	20000			4300	3700	4100	82		✹	▲		151	1,2,6,12,17,18
	57	5.2	93404	F57QBX850A4P/EOL	10	17000	20000			4300	3700	5000	82		✹	▲		151	1,2,6,12,17,18
GX24q-6 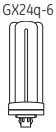	70	8.2	48865	F70QBX827A4P/EOL	10	17000	20000			5200	4470	2700	82		✹	▲		151	1,2,6,12,17,18
	70	8.2	48866	F70QBX830A4P/EOL	10	17000	20000			5200	4470	3000	82		✹	▲		151	1,2,6,12,17,18
	70	8.2	48867	F70QBX835A4P/EOL	10	17000	20000			5200	4470	3500	82		✹	▲		151	1,2,6,12,17,18
	70	8.2	48868	F70QBX/841/A/ECO	10	17000	20000			5200	4470	4100	82		✹	▲		151	1,2,6,12,17,18
	70	8.2	93406	F70QBX850A4P/EOL	10	17000	20000			5200	4470	5000	82		✹	▲		151	1,2,6,12,17,18
4-Pin 2D®																			
GR10q-4 	10	3.6	21301	F102D/827/4P	60	10000				650	545	2700	82					151	1,2,3,6
	16	5.5	22169	F162D/827/4P	50	10000				1050	880	2700	82					151	1,2,3,6
	16	5.5	22177	F162D/835/4P	50	10000				1050	880	3500	82					151	1,2,3,6
	21	5.5	21303	F212D/827/4P	50	10000				1350	1135	2700	82					151	1,2,3,6
	21	5.5	22178	F212D/835/4P	50	10000				1350	1135	3500	82					151	1,2,3,6
	28	8.1	22172	F282D/827/4P	20	10000				2050	1720	2700	82					151	1,2,3,6
	28	8.1	22180	F282D/835/4P	20	10000				2050	1720	3500	82					151	1,2,3,6
	38	8.1	21305	F382D/827/4P	20	10000		9.1	$4.58	2850	2395	2700	82		✹			151	1,2,3,6
	38	8.1	22181	F382D/835/4P	20	10000				2850	2395	3500	82		✹			151	1,2,3,6
GRY10q-3 	55	8.1	36358	F552D/830A/T4P/B	20	10000				4000	3400	3000	82				Torchiere Replacement Lamp	151	1,2,3,6

Compact Fluorescent Lamps

Base	Watts	Nominal Length (in)	Order Code	Description	Case/ Std. Pkg Qty	Volts	Initial Lumens	Mean Lumens	Color Temp K	CRI	Min. Start. Temp (°F)	Power Factor	THD	Rated Life (hrs)	Life In Years	Energy Cost $/Year	Additional Information	Caution Notice	Footnotes
Self-Ballasted Lamps																			
Bright From The Start® A Shape																			
Med	20	5.2	63504	FLE20HB21/2/SWCD	6	120	1100	880	2700K	82	-15	0.5	<85	8000	7.3	$2.45	BFTS A-Shape A21	GE2023-6025	19,20,21
Bright From The Start® Decorative Globes																			
Med	11	4.6	60310	FLE11HBG25SW	6	120	500	400	2700K	82	-15	0.5	<85	8000	7.3	$1.35	BFTS Decorative Globe G25	GE2023-6025	19,20,21
	15	4.6	87432	FLE15HBG25SW	6	120	800	640	2700K	82	-15	0.5	<85	8000	7.3	$1.84	BFTS Decorative Globe G25	GE2023-6025	19,20,21
Reveal® Globes																			
Med	11	4.6	61353	FLEG25XLRVLTP6	6	120	450	360	2490K	70	-15	0.5	<85	10000	9.1	$1.32	Reveal® Globe G25	GE2000-2946	1,8,10,12,19,20,21
	11	4.6	67464	FLE11G25XLRVL/BX	6	120	450	360	2490K	70	-15	0.5	<85	10000	9.1	$1.32	Reveal® Globe G25	GE2000-2946	19,20,21
Reveal® Reflectors																			
Med	11	4.7	61354	FLE11R20XLRVLTP	6	120	340	272	2490K	70	-10	0.5	<85	10000	9.1	$1.32	Reveal® Reflector R20	GE2000-2946	1,8,10,12,19,20,21
	11	4.7	67463	FLE11R20XLRVL/BX	6	120	340	272	2490K	70	-10	0.5	<85	10000	9.1	$1.32	Reveal® Reflector R20	GE2024-7456	19,20,21
Med	15	5.3	61164	FLE15R30/RVL-TP6	6	120	620	496	2490K	70	-15	0.5	<85	10000	9.1	$1.81	Reveal® Reflector R30	GE2000-2946	1,8,10,12,19,20,21
	15	5.3	67461	FLE15R30/RVL/BX	4	120	620	496	2490K	70	-15	0.5	<85	10000	9.1	$1.81	Reveal® Reflector R30	GE2024-7456	19,20,21
	15	5.5	63522	FLE15/DVR30RVLCD	3	120	500	400	2490K	70	-5	0.5	<85	8000	7.3	$1.81	Reveal® Reflector R30 Dimming	GE2025-1509	19,21
Med	26	6.5	61355	FLE26R40XLRVLTP6	6	120	1150	920	2490K	70	-10	0.5	<85	10000	9.1	$3.13	Reveal® Reflector R40	GE2000-2946	1,8,10,12,19,20,21
	26	6.5	89860	FLE26R40RVLBXTP	4	120	1150	920	2490K	70	-10	0.5	<85	10000	9.1	$3.13	Reveal® Reflector R40	GE2024-7456	19,20,21
	26	6.6	67467	FLE26R40RVL/BXHH	4	120	1100	880	2490K	70	-15	0.5	<85	8000	7.3	$3.13	Reveal® Reflector R40	GE2025-1509	19,20,21
	26	6.6	66668	FLE26/DMR40RVLCD	3	120	1100	880	2490K	70	-15	0.5	<85	8000	7.3	$3.13	Reveal® Reflector R40 Dimming	GE2025-1509	19,21
Reveal® Spiral® 3-Way																			
Med	32	6.0	67466	FLE32HT3D3RVL/BX	6	120	540/ 1440/ 1935	1548	2490K	70	-15	0.5	<85	8000	7.3	$3.85/ $3.01/ $1.93	Reveal® T3 3-Way	GE2000-0950	19,20,21
	32	6.0	62908	FLE32HTD3RVL/CD	6	120	540/ 1440/ 1935	1548	2490K	70	-15	0.5	<85	8000	7.3	$1.93/ $3.01/ $3.85	Reveal® T3 3-Way Shorter Design	GE2000-0948	1,8,9,16,19,20,21,22
Reveal® Spiral® T3																			
Med	10	4.1	75405	FLE10HT3/2/RVL/CD	3	120	450	360	2490K	70	-15	0.6	<85	8000	7.3	$1.20	Reveal® T3 Spiral®	GE2000-0948	1,7,8,9,10,19,20,21,22
	10	4.1	67451	FLE10HT3/2RVLBX2	6	120	450	360	2490K	70	-15	0.5	<85	8000	7.3	$1.20	Reveal® T3 Spiral®	GE2000-2709	19,20,21,22
	10	4.1	75409	FLE10HT3/2RVLCD2	3	120	450	360	2490K	70	-15	0.5	<85	8000	7.3	$1.20	Reveal® T3 Spiral®	GE2000-2709	19,20,21,22
	10	4.1	84249	FLE10HT3/2RVLBX2	6	120	450	360	2490K	70	-15	0.5	<85	8000	7.3	$1.20	Reveal® T3 Spiral®	GE2000-2709	19,20,21,22
Med	13	4.1	75406	FLE13HT3/2/RVL/CD	3	120	800	640	2490K	70	-15	0.6	<85	8000	7.3	$1.57	Reveal® T3 Spiral®	GE2000-0948	1,7,8,9,10,19,20,21,22
	13	4.1	67452	FLE13HT3/2RVLBX2	6	120	800	640	2490K	70	-15	0.5	<85	8000	7.3	$1.57	Reveal® T3 Spiral®	GE2000-2709	19,20,21,22
	13	4.1	62906	FLE13HT3/2RVLBX4	6	120	800	640	2490K	70	-15	0.5	<85	8000	7.3	$1.57	Reveal® T3 Spiral®	GE2000-2709	19,20,21,22
	13	4.1	75411	FLE13HT3/2RVLCD2	3	120	800	640	2490K	70	-15	0.5	<85	8000	7.3	$1.57	Reveal® T3 Spiral®	GE2000-2709	19,20,21,22
Med	20	4.7	75407	FLE20HT3/2/RVL/CD	3	120	1200	960	2490K	70	-15	0.6	<85	8000	7.3	$2.41	Reveal® T3 Spiral®	GE2000-0948	1,7,8,9,10,19,20,21,22
	20	4.7	84252	FLE20HT3/2RVLBX2	6	120	1200	960	2490K	70	-15	0.5	<85	8000	7.3	$2.41	Reveal® T3 Spiral®	GE2000-2709	19,20,21,22
	20	4.7	67453	FLE20HT3/2RVLBX2	6	120	1200	960	2490K	70	-15	0.5	<85	8000	7.3	$2.41	Reveal® T3 Spiral®	GE2000-2709	19,20,21,22
Med	26	5.2	75408	FLE26HT3/2/RVL/CD	3	120	1570	1256	2490K	70	-15	0.6	<85	8000	7.3	$3.13	Reveal® T3 Spiral®	GE2000-0948	1,7,8,9,10,19,20,21,22
	26	5.2	84262	FLE26HT3/2RVLBX4	3	120	1570	1256	2490K	70	-15	0.5	<85	8000	7.3	$3.13	Reveal® T3 Spiral®	GE2000-2709	19,20,21,22
	26	5.2	67454	FLE26HT3/2RVLBX2	6	120	1570	1256	2490K	70	-15	0.5	<85	8000	7.3	$3.13	Reveal® T3 Spiral®	GE2000-2709	19,20,21,22
	26	5.2	66354	FLE26HT3/2RVLBX4	3	120	1570	1256	2490K	70	-15	0.5	<85	8000	7.3	$3.13	Reveal® T3 Spiral®	GE2000-2709	19,20,21,22
	26	5.2	75413	FLE26HT3/2RVLCD2	3	120	1570	1256	2490K	70	-15	0.5	<85	8000	7.3	$3.13	Reveal® T3 Spiral®	GE2000-2709	19,20,21,22
	26	5.2	84253	FLE26HT3/2RVLBX2	6	120	1570	1256	2490K	70	-15	0.5	<85	8000	7.3	$3.13	Reveal® T3 Spiral®	GE2000-2709	19,20,21,22
	14	5.1	67465	FLE14HT3/DMRVLBX	4	120	800	640	2490K	70	-10	0.5	<85	8000	7.3	$1.69	Reveal® T3 Spiral® Dimming	GE2000-0951	19,21,22
	26	5.7	63521	FLE26HT3/DMRVLCD	3	120	1560	1248	2490K	70	-5	0.5	<85	10000	9.1	$3.13	Reveal® T3 Spiral® Dimming	GE2000-0951	19,21,22
	26	5.7	67468	FLE26HT3/DMRVLBX	4	120	1560	1248	2490K	70	-5	0.5	<85	10000	9.1	$3.13	Reveal® T3 Spiral® Dimming	GE2000-0951	19,21,22
Reveal® Bright From The Start® A Shape																			
Med	15	4.4	67459	FLE15HB19/2RVLBX	6	120	740	592	2490K	70	-15	0.5	<85	8000	7.3	$1.84	Reveal BFTS A shape A19	GE2023-6025	19,20,21
	19	5.2	63509	FLE19HB21/2RVLCD	6	120	950	760	2490K	70	-15	0.5	<85	8000	7.3	$2.33	Reveal BFTS A shape A21	GE2023-6025	19,20,21
	25	5.8	95143	FLE25HBA23RVLWB	6	120	1375	1100	2490K	70	-15	0.5	<85	6000	5.5	$3.07	Reveal BFTS A shape A23	GE2023-6025	19,20,21
	25	5.8	87461	FLE25HBA23RVLCD	6	120	1375	1100	2490K	70	-15	0.5	<85	6000	5.5	$3.07	Reveal BFTS A shape A23	GE2023-6025	19,20,21

For the most up-to-date product information, see www.gelighting.com. To convert inches to millimeters, multiply by 25.4.
All footnotes and caution notices found at the end of this section (page 5-15).

Base	Watts	Nominal Length (in)	Order Code	Description	Case/ Std. Pkg Qty	Volts	Initial Lumens	Mean Lumens	Color Temp K	CRI	Min. Start. Temp (°F)	Power Factor	THD	Rated Life (hrs)	Life In Years	Energy Cost $/Year	Additional Information	Caution Notice	Footnotes
Self-Ballasted Lamps (continued)																			
Spiral® T2																			
Cand	13	4.3	75368	FLE13HT2/2CAND2P		120	850	680	2700K	82	-15	0.6	<85	8000	7.3	$1.57	T2 Spiral®	GE2000-0948	1,7,8,9,10,19,20,21,22
Med	10	3.5	86241	FLE10HT2/2/827	10	120	580	464	2700K	82	-10	0.5	<85	12000	11.0	$1.20	T2 Spiral®	GE2000-0948	1,7,8,9,10,19,20,21,22
	10	3.5	85382	FLE10HT2/2/SW/CD	3	120	580	464	2700K	82	-10	0.5	<85	12000	11.0	$1.20	T2 Spiral®	GE2000-0948	1,7,8,9,10,19,20,21,22
	10	3.5	68504	FLE10HT2SWXL/BX3	4	120	580	464	2700K	82	-10	0.5	<85	12000	11.0	$1.20	T2 Spiral®	GE2000-2709	19,20,21,22,25
	10	3.5	68510	FLE10HT2SWXL/BX6	4	120	580	464	2700K	82	-10	0.5	<85	12000	11.0	$1.20	T2 Spiral®	GE2000-2709	19,20,21,22,25
	10	3.5	85389	FLE10HT2/2/SW2PK	3	120	580	464	2700K	82	-10	0.5	<85	12000	11.0	$1.20	T2 Spiral®	GE2000-2709	19,20,21,22,25
	10	3.7	72468	FLE10HT2/6H/CWCD	3	120	580	464	4000K	82	-10	0.5	<85	8000	7.3	$1.20	T2 Spiral®	GE2000-2709	19,20,21,22
	10	3.5	68518	FLE10HT2D/XL/BX3	4	120	550	440	5000K	82	-10	0.5	<85	12000	11.0	$1.20	T2 Spiral®	GE2000-2709	19,20,21,22,25
	10	3.7	72471	FLE10HT2/6H/D/CD	3	120	550	440	6500K	82	-10	0.5	<85	8000	7.3	$1.20	T2 Spiral®	GE2000-2709	19,20,21,22
Med	13	3.9	86256	FLE13HT2/2/827	10	120	870	696	2700K	82	-10	0.5	<85	12000	11.0	$1.57	T2 Spiral®	GE2000-0948	1,7,8,9,10,19,20,21,22
	13	3.9	85390	FLE13HT2/2/SW2PK	3	120	870	696	2700K	82	-10	0.5	<85	12000	11.0	$1.57	T2 Spiral®	GE2000-2709	19,20,21,22,25
	13	3.8	72472	FLE13HT2/6H/D/CD	3	120	825	660	6500K	82	-10	0.5	<85	8000	7.3	$1.57	T2 Spiral®	GE2000-2709	19,20,21,22
Med	20	4.1	72880	FLE20HT2/2/XL/CD	3	120	1300	1040	2700K	82	-10	0.6	<85	12000	11.0	$2.41	T2 Spiral®	GE2000-0948	1,7,8,9,10,19,20, 21,22,25
	20	4.1	62951	FLE20HT2/12H/DCD	3	120	1300	1040	5000K	82	-10	0.6	<85	12000	11.0	$2.41	T2 Spiral®	GE2000-0948	1,7,8,9,10,19,20, 21,22,25
	20	4.1	72875	FLE20HT2/2/XL/2P	3	120	1300	1040	2700K	82	-10	0.5	<85	12000	11.0	$2.41	T2 Spiral®	GE2000-2709	19,20,21,22,25
	20	4.1	68520	FLE20HT2D/XL/BX3	4	120	1300	1040	5000K	82	-10	0.5	<85	12000	11.0	$2.41	T2 Spiral®	GE2000-2709	19,20,21,22,25
Spiral® T3																			
Med	9	4.2	42165	FLE9H/T3/2/827	10	120	520	416	2700K	82	-15	0.6	<85	10000	9.1	$1.08	T3 Spiral®	GE2000-0948	1,7,8,9,10,19,20,21,22
	9	4.2	42171	FLE9H/T3/2/841	10	120	520	416	4100K	82	-15	0.6	<85	10000	9.1	$1.08	T3 Spiral®	GE2024-7455	1,7,8,9,11,19,20,21,22
	9	4.0	49906	FLE10HT3/2/SW/CD FLE9HT3/2/SW/CD	12	120	520	416	2700K	82	-15	0.6	<85	10000	9.1	$1.08	T3 Spiral®	GE2000-0948	1,7,8,9,10,19,20,21,22
	9	4.0	49907	FLE10HT32SWCD2PK FLE9HT32SWCD2PK	3	120	520	416	2700K	82	-15	0.6	<85	10000	9.1	$1.08	T3 Spiral®	GE2000-0948	1,7,8,9,10,19,20,21,22
	9	4.0	65670	FLE9HT3/2SW/BX4	3	120	520	416	2700K	82	-15	0.5	<85	10000	9.1	$1.08	T3 Spiral®	GE2024-7455	19,20,21,22
	9	4.0	74196	FLE9HT3/2/SW/BX	10	120	520	416	2700K	82	-15	0.5	<85	10000	9.1	$1.08	T3 Spiral®	GE2024-7455	19,20,21,22
	9	4.0	74197	FLE9HT3/2/BX/2P	6	120	520	416	2700K	82	-15	0.5	<85	10000	9.1	$1.08	T3 Spiral®	GE2024-7455	19,20,21,22
	9	4.0	73156	FLE9HT3/2/SW5PK	5	120	520	416	2700K	82	-15	0.5	<85	10000	9.1	$1.08	T3 Spiral®	GE2024-7455	19,20,21,22
	10	4.4	80936	FLE10HT3/2/XL	10	120	550	440	2700K	80	-15	0.6	<85	12000	11.0	$1.20	T3 Spiral®	GE2000-0948	1,7,8,9,10,19,20,21,22
Med	13	4.5	16459	FLE13HT3/2/SW/2P	3	120	825	660	2700K	82	-15	0.6	<85	10000	9.1	$1.57	T3 Spiral®	GE2000-0948	1,7,8,9,10,19,20,21,22
	13	4.4	42159	FLE13H/T3/2/827	10	120	825	660	2700K	82	-15	0.6	<85	10000	9.1	$1.57	T3 Spiral®	GE2024-7455	1,7,8,9,11,19,20,21,22
Med	14	4.5	94543	FLE14HT3/2/827	10	120	950	760	2700K	82	-10	0.6	<85	10000	9.1	$1.69	T3 Spiral®	GE2000-0948	1,7,8,9,10,19,20, 21,22,25
	14	4.5	94542	FLE14HT3/2/841	10	120	950	760	4100K	82	-10	0.6	<85	10000	9.1	$1.69	T3 Spiral®	GE2000-0948	1,7,8,9,10,19,20, 21,22,25
	14	4.5	89091	FLE15HT3/2/D/CD FLE14HT3/2/D/CD	3	120	900	720	5000K	82	-10	0.6	<85	10000	9.1	$1.69	T3 Spiral®		19,20,21,22,25
	14	4.5	65425	FLE14HT3/2-PK4/6	6	120	950	760	4100K	82	-10	0.5	<85	10000	9.1	$1.69	T3 Spiral®	GE2000-2709	19,20,21,22,25
	14	4.5	67445	FLE14HT3/41BX2HH	6	120	950	760	4100K	82	-10	0.5	<85	10000	9.1	$1.69	T3 Spiral®	GE2000-2709	19,20,21,22,25
	14	4.5	64005	FLE14HT3/2DBX2/6	6	120	900	720	5000K	82	-10	0.5	<85	10000	9.1	$1.69	T3 Spiral®	GE2000-2709	19,20,21,22,25
	15	4.8	80937	FLE15HT3/2/XL/SW	10	120	950	760	2700K	80	-15	0.6	<85	12000	11.0	$1.81	T3 Spiral®	GE2000-0948	1,7,8,9,10,19,20, 21,22
	15	4.8	47435	FLE15HT3/2/XL/CD	12	120	950	760	2700K	80	-15	0.6	<85	12000	11.0	$1.81	T3 Spiral®	GE2000-0948	1,7,8,9,10,19,20, 21,22
	15	4.9	64801	FLE15HT3/2SX/827	6	120	975	780	2700K	82	-15	0.5	<85	15000	13.7	$1.81	T3 Spiral®	GE2000-0948	1,7,8,9,10,19,20, 21,22,25
	15	4.9	69659	FLE15HT3XXLL/5BX	3	120	975	780	2700K	82	-15	0.5	<85	15000	13.7	$1.81	T3 Spiral®	GE2000-2709	19,20,21,22,25
Med	20	4.4	15834	FLE20HT3/2/827	10	120	1300	1040	2700K	82	-15	0.6	<85	10000	9.1	$2.41	T3 Spiral®	GE2000-0948	1,7,8,9,10,19,20, 21,22,25
	20	4.4	15516	FLE20HT3/2/SW/CD	12	120	1300	1040	2700K	82	-15	0.6	<85	10000	9.1	$2.41	T3 Spiral®	GE2000-0948	1,7,8,9,10,19, 20,21,22,25
	20	4.4	25186	FLE20HT3/2/841	10	120	1300	1040	4100K	82	-15	0.6	<85	10000	9.1	$2.41	T3 Spiral®	GE2000-0948	1,7,8,9,10,19,20, 21,22,25
	20	5.3	80888	FLE20HT3/2/XL827	10	120	1200	960	2700K	80	-15	0.6	<85	12000	11.0	$2.41	T3 Spiral®	GE2000-0948	1,7,8,9,10,19,20,21,22
	20	4.8	64802	FLE20HT3/2SX/827	6	120	1300	1040	2700K	82	-15	0.5	<85	15000	13.7	$2.41	T3 Spiral®	GE2000-0948	1,7,8,9,11,19,20, 21,22,25
	20	4.7	71764	FLE20HT3/2/6S/TP	6	120	1235	988	5000K	82	-15	0.6	<85	8000	7.3	$2.41	T3 Spiral®	GE2000-0948	1,7,8,9,10,19,20,21,22
	20	4.4	89094	FLE20HT3/2/D/CD	12	120	1300	1040	5000K	82	-15	0.6	<85	10000	9.1	$2.41	T3 Spiral®	GE2000-0948	1,7,8,9,10,19,20, 21,22,25
	20	4.4	74201	FLE20HT3/2/BX2PK	6	120	1300	1040	2700K	82	-15	0.5	<85	10000	9.1	$2.41	T3 Spiral®	GE2000-2709	19,20,21,22,25
	20	4.8	69656	FLE20HT3XXLL/2BX	3	120	1300	1040	2700K	82	-15	0.5	<85	15000	13.7	$2.41	T3 Spiral®	GE2000-2709	19,20,21,22,25

For the most up-to-date product information, see www.gelighting.com. To convert inches to millimeters, multiply by 25.4.
All footnotes and caution notices found at the end of this section (page 5-15).

Compact Fluorescent Lamps

Base	Watts	Nominal Length (in)	Order Code	Description	Case/ Std. Pkg Qty	Volts	Initial Lumens	Mean Lumens	Color Temp K	CRI	Min. Start. Temp (°F)	Power Factor	THD	Rated Life (hrs)	Life In Years	Energy Cost $/Year	Additional Information	Caution Notice	Footnotes
Self-Ballasted Lamps (continued)																			
Spiral® T3 (continued)																			
Med	20	4.4	71284	FLE20HT3/2/SW6PK	6	120	1300	1040	2700K	82	-15	0.5	<85	10000	9.1	$2.41	T3 Spiral®	GE2000-2709	19,20,21,22,25
	20	4.4	65672	FLE20HT3/2SW/BX4	3	120	1300	1040	2700K	82	-15	0.5	<85	10000	9.1	$2.41	T3 Spiral®	GE2000-2709	19,20,21,22,25
	20	4.4	74200	FLE20HT3/2/SW/BX	10	120	1300	1040	2700K	82	-15	0.5	<85	10000	9.1	$2.41	T3 Spiral®	GE2000-2709	19,20,21,22,25
	20	4.4	76993	FLE20HT3/2/CB/BX	10	120	1300	1040	2700K	82	-15	0.5	<85	10000	9.1	$2.41	T3 Spiral®	GE2000-2709	19,20,21,22,25
	20	4.4	97249	FLE20HT3/2/SW5PK	5	120	1300	1040	2700K	82	-15	0.5	<85	10000	9.1	$2.41	T3 Spiral®	GE2000-2709	19,20,21,22,25
	20	4.4	97690	FLE20HT3/2/SWBX3	4	120	1300	1040	2700K	82	-15	0.5	<85	10000	9.1	$2.41	T3 Spiral®	GE2000-2709	19,20,21,22,25
	20	4.4	49587	FLE20HT32SWCD3PK	3	120	1300	1040	2700K	82	-15	0.5	<85	10000	9.1	$2.41	T3 Spiral®	GE2000-2709	19,20,21,22,25
	20	4.4	64006	FLE20HT3/2DBX2/6	6	120	1300	1040	5000K	82	-15	0.5	<85	10000	9.1	$2.41	T3 Spiral®	GE2000-2709	19,20,21,22,25
Med	23	5.1	80889	FLE23HT3/2/XL827	10	120	1600	1280	2700K	80	-15	0.6	<85	12000	11.0	$2.77	T3 Spiral®	GE2000-0948	1,7,8,9,10,19,20,21,22
	23	4.7	42164	FLE23H/T3/2/827	10	120	1650	1320	2700K	82	-15	0.6	<85	10000	9.1	$2.77	T3 Spiral®	GE2000-0948	1,7,8,9,11,19,20,21,22
	23	4.8	15517	FLE23HT3/2/SW/CD	12	120	1600	1280	2700K	82	-15	0.6	<85	10000	9.1	$2.77	T3 Spiral®	GE2000-0948	1,7,8,9,10,19,20,21,22
	23	4.8	94546	FLE23HT3/2/841	10	120	1600	1280	4000K	82	-15	0.6	<85	10000	9.1	$2.77	T3 Spiral®	GE2000-0948	1,7,8,9,10,19,20,21,22
	23	4.8	89095	FLE26HT3/2/D/CD	12	120	1600	1280	6500K	82	-15	0.6	<85	10000	9.1	$2.77	T3 Spiral®	GE2000-0948	1,7,8,9,10,19,20,21,22
Med	26	4.7	80890	FLE26HT3/2/XL827	10	120	1700	1360	2700K	80	-15	0.6	<85	12000	11.0	$3.13	T3 Spiral®	GE2000-0948	1,7,8,9,10,19,20,21,22
Spiral® T3 Dimming																			
Med	14	5.0	66662	FLE14HT3/2DM/BX	3	120	950	760	2700K	82	-10	0.5	<85	10000	9.1	$1.69	T3 Spiral® Dimming	GE2000-0951	19,21,22,25
	26	5.7	66663	FLE26HT3/2DM/BX	3	120	1700	1360	2700K	82	-10	0.5	<85	10000	9.1	$3.13	T3 Spiral® Dimming	GE2010-9353	19,21,22,24
Spiral® T4 and T5 Hi Lumen																			
Med	29	5.2	81514	FLE29HLX/2XL/827	10	120	2200	1760	2700K	80	-15	0.6	<85	12000	11.0	$3.49	T4 Spiral®	GE2000-0948	1,7,8,9,10,19,20,21,22
	32	6.3	24684	FLE32HLX/2/SW/BX	12	120	2100	1680	2700K	80	-15	0.5	<85	8000	7.3	$3.85	T4 Spiral®	GE2000-2709	19,20,21,22
	42	7.0	80891	FLE42HLX/2/XL827	10	120	2730	2184	2700K	82	-15	0.6	<85	12000	11.0	$5.06	T4 Spiral®	GE2000-0948	1,7,8,9,10,19,20, 21,22,25
	42	7.0	97728	FLE42HLX/2/SW/BX	4	120	2730	2184	2700K	82	-15	0.5	<85	12000	11.0	$5.06	T4 Spiral®	GE2000-2709	19,20,21,22,25
	55	5.5	78965	FLE55HT5/2/SW/BX	4	120	3800	3040	2700K	82	-15	0.6	<85	8000	7.3	$6.62	T5 Spiral®	GE2000-0948	1,7,8,9,10,19,20,21,22
Spiral® 3-Way																			
Med	26	5.7	77123	FLE26HT3/2D/3BX	6	120	1750/ 1150/ 600	1400	2700K	80	-15	0.6	<85	10000	9.1	$1.57/ $2.29/ $3.13	T3 Spiral®, 3-way	GE2000-0948	1,7,8,9,10,19,20,21,22
	26	5.7	77124	FLE26HT3/2D3CD	3	120	1750/ 1150/ 600	1400	2700K	80	-15	0.6	<85	10000	9.1	$1.57/ $2.29/ $3.13	T3 Spiral®, 3-way	GE2000-0948	1,7,8,9,10,19,20,21,22
Med	32	5.8	78952	FLE32HT3/2D3/BX	6	120	600/ 1600/ 2150	1720	2700K	82	-15	0.5	<85	10000	9.1	$1.93/ $3.01/ $3.85	T3 Spiral®, 3-way	GE2000-0948	1,8,9,16,19,20,21,22,25
	32	6.0	62070	FLE32HT3/2D3CWBX	6	120	600/ 1600/ 2150	1720	4000K	82	-15	0.5	<85	8000	7.3	$1.93/ $3.01/ $3.85	T3 Spiral®, 3-way	GE2000-0948	1,7,9,10,19,20,21,22
	32	6.0	63517	FLE32HT3/2D3/DBX	6	120	540/ 1440/ 1935	1548	6500K	70	-15	0.5	<85	8000	7.3	$1.93/ $3.01/ $3.85	T3 Spiral®, 3-way	GE2000-0950	19,20,21,22
	32	5.8	63482	FLE32HT3/2D3/CD	6	120	600/ 1600/ 2150	1720	2700K	82	-15	0.5	<85	10000	9.1	$1.93/ $3.01/ $3.85	T3 Spiral®, 3-way	GE2000-0950	19,20,21,25
Spiral® GU 24																			
Med	10	3.5	76135	FLE10HT3/2GU24CD	3	120	550	440	2700K	80	-15	0.6	<85	10000	9.1	$1.20	T3 GU 24 Base	GE2000-0948	1,8,9,10,19,20,21,22
	15	4.1	75367	FLE15HT3/2GU24CD	3	120	1000	800	2700K	82	-15	0.6	<85	10000	9.1	$1.81	T3 GU 24 Base	GE2000-0948	1,8,9,10,19,20,21,22
	20	4.1	76136	FLE20HT3/2GU24CD	3	120	1200	960	2700K	80	-15	0.6	<85	10000	9.1	$2.41	T3 GU 24 Base	GE2000-0948	1,8,9,10,19,20,21,22
	26	4.6	76137	FLE26HT3/2GU24CD	3	120	1750	1400	2700K	80	-15	0.6	<85	10000	9.1	$3.13	T3 GU 24 Base	GE2000-0948	1,8,9,10,19,20,21,22
Reflectors/Indoor PAR																			
Med	26	6.6	66667	FLE26PAR38DM/BX	3	120	1300	1040	2700K	82	-15	0.5	<85	8000	7.3	$3.13	PAR38 Dimming	GE2025-1509	19,21,23
	11	4.2	78948	FLE11/2/R20/D/CD	3	120	370	296	6500K	82	-15	0.6	<85	10000	9.1	$1.32	Relector R20	GE2000-2946	1,8,9,10,12,19,20,21
	11	4.7	80892	FLE11/2/R20XL827	10	120	400	320	2700K	80	-10	0.6	<85	10000	9.1	$1.32	Relector R20	GE2000-2946	1,8,9,10,12,19,20,21
	11	4.7	47477	FLE11/2/R20XL/CD	12	120	400	320	2700K	80	-10	0.6	<85	10000	9.1	$1.32	Relector R20	GE2000-2946	1,8,9,10,12,19,20,21
	11	4.7	24691	FLE11/2R20XLSWCD	3	120	400	320	2700K	80	-10	0.5	<85	10000	9.1	$1.32	Relector R20	GE2024-7456	19,20,21
	11	4.7	85278	FLE11/2/R20SW/BX	6	120	400	320	2700K	80	-10	0.5	<85	10000	9.1	$1.32	Relector R20	GE2024-7456	19,20,21
	11	4.7	76131	FLE11/2/R20XL/2P	3	120	400	320	2700K	80	-10	0.5	<85	10000	9.1	$1.32	Relector R20	GE2024-7456	19,20,21
	11	4.2	85279	FLE11/2/R20D/BX	6	120	370	296	6500K	82	-15	0.5	<85	10000	9.1	$1.32	Relector R20	GE2000-2946	19,20,21
Med	15	5.3	78950	FLE15/2/R30/D/CD	3	120	650	520	6500K	82	-15	0.6	<85	10000	9.1	$1.81	Reflector R30	GE2000-2946	1,8,9,10,12,19,20,21
	16	5.3	20708	FLE15/2/R30/SWCD FLE16/2/R30/SWCD	12	120	750	600	2700K	80	-15	0.6	<85	10000	9.1	$1.93	Reflector R30	GE2024-7456	1,8,9,10,12,19,20,21
	16	5.3	80893	FLE16/2/R30XL827	10	120	750	600	2700K	80	-15	0.6	<85	10000	9.1	$1.93	Reflector R30	GE2000-2946	1,8,9,10,12,19,20,21
	16	5.3	47478	FLE16/2/R30XL/CD	12	120	750	600	2700K	80	-15	0.6	<85	10000	9.1	$1.93	Reflector R30	GE2000-2946	1,8,9,10,12,19,20,21

For the most up-to-date product information, see www.gelighting.com. To convert inches to millimeters, multiply by 25.4.
All footnotes and caution notices found at the end of this section (page 5-15).

Base	Watts	Nominal Length (in)	Order Code	Description	Case/ Std. Pkg Qty	Volts	Initial Lumens	Mean Lumens	Color Temp K	CRI	Min. Start. Temp (°F)	Power Factor	THD	Rated Life (hrs)	Life In Years	Energy Cost $/Year	Additional Information	Caution Notice	Footnotes
Self-Ballasted Lamps (continued)																			
Reflectors/Indoor PAR (continued)																			
Med	16	5.3	72984	FLE16/2/R30/2P	3	120	750	600	2700K	80	-15	0.5	<85	10000	9.1	$1.93	Reflector R30	GE2024-7456	19,20,21
	15	5.5	66664	FLE15/2DMR30/BX	3	120	550	440	3000K	82	-5	0.5	<85	8000	7.3	$1.81	Reflector R30 Dimming	GE2025-1509	19,21
Outdoor																			
Med	14	5.1	49894	FLE11/2TC14SWCD FLE14/2TC16SW/CD	3	120	750	600	2700K	82	-15	0.6	<85	10000	9.1	$1.69	Post Light	GE2000-2946	1,8,10,12,19,20,21
	14	4.9	49895	FLE11/2TC14BUGCD FLE14/2TC16BUGCD	3	120	750	600	2700K	80	-15	0.6	<85	10000	9.1	$1.69	Bug Yellow Post Light	GE2000-2946	1,8,10,12,19,20,21
	14	4.9	47464	FLE14/2/TC16/BUG	12	120	750	600	2700K	80	-15	0.5	<85	10000	9.1	$1.69	Bug Yellow Post Light	GE2000-2946	1,8,10,12,19,20,21
	14	5.1	85384	FLE14/2/TC16SWCD	12	120	750	600	2700K	82	-15	0.5	<85	10000	9.1	$1.69	Bullet Shape	GE2000-2946	1,8,10,12,19,20,21
	24	5.4	78964	FLE24/2PAR38FLCD	3	120	1185	948	2700K	80	-15	0.6	<85	10000	9.1	$2.89	Par 38 Flat Lens	GE2010-3449	1,8,9,12,16,19,20,21
Med	26	5.9	21739	FLE26/2/PAR38/CD	3	120	1300	1040	2700K	80	-10	0.6	<85	10000	9.1	$3.13	Par 38 Glass Reflector	GE2010-3449	1,8,9,12,16,19,20,21
	26	5.9	80895	FLE26/2/PAR38/XL	6	120	1300	1040	2700K	80	-10	0.6	<85	10000	9.1	$3.13	Par 38 Glass Reflector	GE2010-3449	1,8,9,12,16,19,20,21
	26	5.9	47483	FLE26/2PAR38XCD	3	120	1300	1040	2700K	80	-10	0.6	<85	10000	9.1	$3.13	Par 38 Glass Reflector	GE2010-3449	1,8,9,12,16,19,20,21
	26	5.9	82004	FLE26/2PAR38/BX	6	120	1300	1040	2700K	80	-10	0.5	<85	10000	9.1	$3.13	Par 38 Glass Reflector	GE2010-3449	19,20,21,23
	26	5.9	73157	FLE26/2/PAR382P	3	120	1300	1040	2700K	80	-10	0.5	<85	10000	9.1	$3.13	Par 38 Glass Reflector	GE2010-3449	19,20,21,23
Decorative Ceiling Fan Medium Base																			
Med	11	4.4	78939	FLE11/2/A17/D/CD	3	120	460	368	6500K	80	-15	0.6	<85	10000	9.1	$1.32	A-Line Shape A17	GE2000-2946	1,8,10,12,19,20,21
	11	4.4	78940	FLE11/2/A17/D/3P	3	120	460	368	6500K	80	-15	0.6	<85	10000	9.1	$1.32	A-Line Shape A17	GE2000-2946	1,8,10,12,19,20,21
	11	4.4	47486	FLE11/2/A17XL/CD	12	120	500	400	2700K	82	-15	0.6	<85	10000	9.1	$1.32	A-Line Shape A17	GE2000-2946	1,8,10,12,19,20,21
	11	4.4	49687	FLE11/2/A17XL2PK	3	120	500	400	2700K	82	-15	0.5	<85	10000	9.1	$1.32	A-Line Shape A17	GE2000-2946	19,20,21
Decorative Ceiling Fan Candelabra Base																			
Cand	11	4.4	78937	FLE11/2/A17CB/CD	3	120	500	400	2700K	82	-15	0.6	<85	10000	9.1	$1.32	A-Line Shape A17, Candelabra Base	GE2000-2946	1,8,10,12,19,20,21
	11	4.4	78938	FLE11/2/A17CB/3P	3	120	500	400	2700K	82	-15	0.6	<85	10000	9.1	$1.32	A-Line Shape A17, Candelabra Base	GE2000-2946	1,8,10,12,19,20,21
	11	4.3	78941	FLE11/2A17CBD/CD	3	120	460	368	6500K	82	-15	0.6	<85	10000	9.1	$1.32	A-Line Shape A17, Candelabra Base	GE2000-2946	1,8,10,12,19,20,21
Decorative A Shapes																			
Med	11	4.1	89622	FLE11/2/A19XL	10	120	500	400	2700K	82	-15	0.6	<85	10000	9.1	$1.32	A-Line Shape A19	GE2000-2946	1,8,10,12,19,20,21
	15	4.5	89632	FLE15/2/A19XL	10	120	825	660	2700K	82	-15	0.6	<85	10000	9.1	$1.81	A-Line Shape A19	GE2000-2946	1,8,10,12,19,20,21
	20	5.6	89634	FLE20/2/A19XL	10	120	1100	880	2700K	82	-15	0.6	<85	10000	9.1	$2.41	A-Line Shape A19	GE2024-7456	1,8,10,12,19,20,21
	15	4.8	47487	FLE15/2/A21XL/CD	12	120	800	640	2700K	80	-15	0.6	<85	10000	9.1	$1.81	A-Line Shape A21	GE2000-2946	1,8,10,12,19,20,21
Decorative Bullet																			
Med	20	5.3	89635	FLE20/2/T19XL	10	120	1100	880	2700K	82	-15	0.6	<85	8000	7.3	$2.41	Bullet Shape	GE2000-2946	1,8,10,12,19,20,21
	26	5.9	89636	FLE26/2/T21XL	10	120	1350	1080	2700K	82	-15	0.6	<85	10000	9.1	$3.13	Bullet Shape	GE2000-2946	1,8,10,12,19,20,21
Decorative Candle Candelabra Base																			
Cand	9	5.5	85388	FLE9/2/CAC/SW/CD	12	120	400	320	2700K	82	-15	0.6	<85	10000	9.1	$1.08	Candle Shape, Candelabra Base	GE2000-2946	1,8,10,12,19,20,21
	9	5.5	16105	FLE9/2CAC/XL/827	10	120	400	320	2700K	82	-15	0.6	<85	10000	9.1	$1.08	Candle Shape, Candelabra Base	GE2000-2946	1,8,10,12,19,20,21
	9	4.3	60299	FLE9/3/CAC/SWBX3	4	120	380	304	2700K	82	-10	0.5	<85	8000	7.3	$1.08	Candle Shape, Candelabra Base	GE2000-2946	19,20,21
	9	4.3	60295	FLE9/3/CAC/SSBX3	4	120	380	304	5000K	82	-10	0.5	<85	8000	7.3	$1.08	Candle Shape, Candelabra Base	GE2000-2946	19,20,21
	14	5.2	60300	FLE14/3/CACSWBX3	4	120	650	520	2700K	82	-10	0.5	<85	8000	7.3	$1.69	Candle Shape, Candelabra Base	GE2000-2946	19,20,21
	14	5.2	60296	FLE14/3/CACSSBX3	4	120	650	520	5000K	82	-10	0.5	<85	8000	7.3	$1.69	Candle Shape, Candelabra Base	GE2000-2946	19,20,21
Decorative Candle Medium Base																			
Med	9	5.4	47488	FLE9/2/CAM/XL/CD	12	120	430	344	2700K	80	-15	0.6	<85	10000	9.1	$1.08	Candle Shape, Med Base	GE2000-2946	1,8,10,12,19,20,21
	9	4.8	60297	FLE9/3/CAM/SWBX3	4	120	380	304	2700K	82	-10	0.5	<85	8000	7.3	$1.08	Candle Shape, Med Base	GE2000-2946	19,20,21
	9	4.8	60292	FLE9/3/CAM/SSBX3	4	120	380	304	5000K	82	-10	0.5	<85	8000	7.3	$1.08	Candle Shape, Med Base	GE2000-2946	19,20,21
	9	5.4	24692	FLE9/2/CAM/SW/CD	12	120	430	344	2700K	82	-15	0.5	<85	6000	5.5	$1.08	Candle Shape, Med Base	GE2000-2946	19,20,21
	9	5.5	79068	FLE9/2/CAC/XL2PK	3	120	430	344	2700K	82	-15	0.5	<85	10000	9.1	$1.08	Candle Shape, Med Base	GE2000-2946	19,20,21
	14	5.4	60298	FLE14/3/CAMSWBX3	4	120	650	520	2700K	82	-10	0.5	<85	8000	7.3	$1.69	Candle Shape, Med Base	GE2000-2946	19,20,21
	14	5.4	60294	FLE14/3/CAMSSBX3	4	120	650	520	5000K	82	-10	0.5	<85	8000	7.3	$1.69	Candle Shape, Med Base	GE2000-2946	19,20,21

For the most up-to-date product information, see www.gelighting.com. To convert inches to millimeters, multiply by 25.4.
All footnotes and caution notices found at the end of this section (page 5-15).

Compact Fluorescent Lamps

Base	Watts	Nominal Length (in)	Order Code	Description	Case/ Std. Pkg Qty	Volts	Initial Lumens	Mean Lumens	Color Temp K	CRI	Min. Start. Temp (°F)	Power Factor	THD	Rated Life (hrs)	Life In Years	Energy Cost $/Year	Additional Information	Caution Notice	Footnotes
Self-Ballasted Lamps (continued)																			
Decorative Globes																			
Med	9	3.2	74587	FLE9/3/G18/3PK	3	120	360	288	2700K	80	0	0.5	<85	8000	7.3	$1.08	Globe G18	GE2000-2946	19,20,21
	9	3.2	74586	FLE9/3/G18/CD	3	120	360	288	2700K	80	0	0.5	<85	8000	7.3	$1.08	Globe G18	GE2000-2946	19,20,21
	11	4.6	89629	FLE11/2/G25XL	10	120	500	400	2700K	82	-15	0.6	<85	10000	9.1	$1.32	Globe G25	GE2000-2946	1,8,10,12,19,20,21
	11	4.6	47484	FLE11/2/G25XL/CD	12	120	500	400	2700K	82	-15	0.6	<85	10000	9.1	$1.32	Globe G25	GE2000-2946	1,8,10,12,19,20,21
	11	4.6	78946	FLE11/2/G25/D/CD	3	120	450	360	6500K	82	-15	0.6	<85	10000	9.1	$1.32	Globe G25	GE2000-2946	1,8,10,12,19,20,21
	11	4.6	78947	FLE11/2/G25/D/3P	3	120	450	360	6500K	82	-15	0.6	<85	10000	9.1	$1.32	Globe G25	GE2000-2946	1,8,10,12,19,20,21
	11	4.6	85392	FLE11/2/G25XL3PK	3	120	500	400	2700K	82	-15	0.5	<85	10000	9.1	$1.32	Globe G25	GE2000-2946	19,20,21
	11	4.6	89096	FLE11/2/G25XL2PK	3	120	500	400	2700K	82	-15	0.5	<85	10000	9.1	$1.32	Globe G25	GE2000-2946	19,20,21
Specialty																			
Colored Spiral®																			
Med	13	4.9	78957	FLE13HT3/2/BL	6	120	NA	NA	NA	NA	5	0.6	<85	8000	7.3	$1.57	T3, Blacklight, Boxed	GE2000-0948	1,8,9,10
	13	4.9	78958	FLE13HT3/2/ORANGE	6	120	NA	NA	NA	NA	5	0.6	<85	8000	7.3	$1.57	T3, Orange, Boxed	GE2000-0948	1,8,9,10
	13	4.9	78959	FLE13HT3/2/YELLOW	6	120	NA	NA	NA	NA	5	0.6	<85	8000	7.3	$1.57	T3, Yellow, Boxed	GE2000-0948	1,8,9,10
Film and TV Lighting HLBX 4-Pin																			
2G11	55	20.7	41873	F55BX/STUDIOBX56	40		4100		5600	89				10000			High color rendering. Ideal for TV studios, live broadcasts. Color tuned to match tungsten and daylight light sources.		
	55	20.7	41903	F55BX/CINPLUS/32	40		2400		3200	92				2000			High color rendering. Soft light used in film applications. GEL free light source. Matches the color spectrum of film. LB and CC +/-5.		
	55	20.7	41911	F55BX/CINPLUS/55	40		2400		5500	95				2000			High color rendering. Soft light used in film applications. GEL free light source. Matches the color spectrum of film. LB and CC +/-5.		

For the most up-to-date product information, see www.gelighting.com. To convert inches to millimeters, multiply by 25.4.
All footnotes and caution notices found at the end of this section (page 5-15).

Footnotes

1 Fluorescent lamp lumens decline during life.

2 Based on 60Hz reference circuit.

3 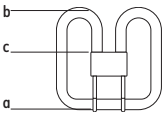

10-watt, 16-watt and 28-watt 2D® lamps may be operated in any position. 21-watt, 38-watt, 39-watt and 55-watt 2D® lamps must be used with the leg marked (a) in the diagram below the bend (b), in order to avoid overheating the end of the cap marked (c).

4 Life ratings for the F18BX preheat lamps are based on operating the lamp at 3 hrs. per start on a preheat type circuit. Operation on rapid start and instant start ballasts is not recommended.

5 Cold cathode resistance is approximately 6.0 Ohms.

6 4-Pin lamp minimum starting temperature is a function of the ballast. Most ballasts are rated with a minimum starting temperature of 50°F (10°C). Ballasts are also available that provide reliable starting to 0°F (-18°C) and -20°F (-29°C).

7 Most one-piece self-ballasted lamps for incandescent sockets and plug-in lamps with screw-in adapters do not work with clip-on shades.

8 Lumens on one-piece self-ballasted lamp systems are measured base up.

9 Best performance if operated base up and at 77°F (25°C) ambient temperature.

10 Use only on 120V, 60Hz circuits. Do not use on dimming circuits, photocells or timers. Do not use in wet locations.

11 Adapters rated at 40,000 hours life.

12 Amalgam products experience stable brightness over a wider temperature range and in various operating positions.

13 Life ratings are based on operating the lamp at 3 hrs. per start on a rapid start type ballast. Life rating on a preheat or instant start ballast is 25% lower.

14 Use only on 120V, 60Hz circuits. Do not use on with photocells or timers. Do not use in wet locations.

15 These lamps are only recommended for use with single-lamp ballasts or parallel-wired 2-lamp ballasts.

16 UL Listed for wet locations. Use only on 120V, 60Hz circuits. Do not use on dimming circuits, photocells or timers.

17 Max. bulb wall temperature not to exceed 180°C. Consult GE sales representative for further information.

18 Life ratings are based on operating the lamp on a high frequency electronic rapid start type ballast.

19 This product complies with Part 18 of the FCC Rules, but may cause interference to radios, televisions, wireless telephones, and remote controls. Avoid placing this product near these devices. If interference occurs, move the product away from the device or plug either into a different outlet. Do not install this product near maritime safety equipment or other critical navigation or communication equipment operating between 0.45 - 30 MHz. Not intended for use with emergency exit fixtures or lights.

Use only on 120V 60 Hz circuits.

When using CFL with motion sensor, preset "on" time on the device as long as possible to avoid frequent switching. (Otherwise lamp life will be decreased significantly)

20 Not intended for use with dimmers. Some electronic timer and photosensor devices contain dimming circuitry, so before using them, check with its manufacturer to ensure compatibility with CFL bulbs.

21 RISK OF ELECTRICK SHOCK
DO NOT USE WHERE DIRECTLY EXPOSED TO WATER
Do not open - no user serviceable parts inside

22 Lamp may shatter and cause injury if broken
Remove and install by grasping only plastic portion of the lamp

23 SUITABLE FOR WET LOCATION

24 SUITABLE FOR USE IN ENCLOSED LUMINAIRES

25 NOT FOR USE IN ENCLOSED FIXTURE

Caution Notices

151

⚠ **CAUTION**

Lamp may shatter and cause injury if broken

- Remove and install by grasping only plastic portion of the lamp

GE2000-0948

⚠ **CAUTION**

Risk of electric shock

- Do not use where directly exposed to water
- Do not open—no user serviceable parts inside

Lamp may shatter and cause injury if broken

- Remove and install by grasping only plastic portion of the lamp

This product complies with Part 18 of the FCC Rules, but may cause interference to radios, televisions, wireless telephones, and remote controls. Avoid placing this product near these devices. If interference occurs, move the product away from the device or plug either into a different outlet. Do not install this product near maritime safety equipment or other critical navigation or communication equipment operating between 0.45-30 MHz. Not intended for use with emergency exit fixture or lights, electronic timers, photocells, or with dimmers

GE2000-0950

⚠ **CAUTION**

Risk of electric shock

- Do not use where directly exposed to water
- Do not open—no user serviceable parts inside

Lamp may shatter and cause injury if broken

- Remove and install by grasping only plastic portion of the lamp

This product complies with Part 18 of the FCC Rules, but may cause interference to radios, televisions, wireless telephones, and remote controls. Avoid placing this product near these devices. If interference occurs, move the product away from the device or plug either into a different outlet. Do not install this product near maritime safety equipment or other critical navigation or communication equipment operating between 0.45 - 30 MHz. Not intended for use with emergency exit fixtures or lights, or with dimmers. Not for use in enclosed fixtures.

GE2000-0951

⚠ **CAUTION**

Risk of electric shock

- Do not use where directly exposed to water
- Do not open—no user serviceable parts inside

Lamp may shatter and cause injury if broken

- Remove and install by grasping only plastic portion of the lamp

This product complies with Part 18 of the FCC Rules, but may cause interference to radios, televisions, wireless telephones, and remote controls. Avoid placing this product near these devices. If interference occurs, move the product away from the device or plug either into a different outlet. Do not install this product near maritime safety equipment or other critical navigation or communication equipment operating between 0.45 - 30 MHz. Not intended for use with emergency exit fixtures or lights, or with dimmers. Not for use in enclosed fixtures.

Caution Notices (continued)

GE2000-2709

⚠ CAUTION

Risk of electric shock

- Do not use where directly exposed to water
- Do not open - no user serviceable parts inside

Lamp may shatter and cause injury if broken

- Remove and install by grasping only plastic portion of the lamp

This product complies with Part 18 of the FCC Rules, but may cause interference to radios, televisions, wireless telephones, and remote controls. Avoid placing this product near these devices. If interference occurs, move the product away from the device or plug either into a different outlet. Do not install this product near maritime safety equipment or other critical navigation or communication equipment operating between 0.45 - 30 MHz. Not intended for use with emergency exit fixtures or lights, or with dimmers. Not for use in enclosed fixtures.

GE2000-2946

⚠ CAUTION

Risk of electric shock

- Do not open—no user serviceable parts inside
- Do not use where directly exposed to water or outdoors without an enclosed fixture

This product complies with Part 18 of the FCC Rules, but may cause interference to radios, televisions, wireless telephones, and remote controls. Avoid placing this product near these devices. If interference occurs, move the product away from the device or plug either into a different outlet. Do not install this product near maritime safety equipment or other critical navigation or communication equipment operating between 0.45-30 MHz. Not intended for use with emergency exit fixtures or lights, electronic timers, photocells, or with dimmers.

GE2010-3449

⚠ CAUTION

Risk of electric shock

- Do not use where directly exposed to water
- Do not open—no user serviceable parts inside
- Use indoors only

Lamp may shatter and cause injury if broken

- Remove and install by grasping only plastic portion of the lamp

This product complies with Part 18 of the FCC Rules, but may cause interference to radios, televisions, wireless telephones, and remote controls. Avoid placing this product near these devices. If interference occurs, move the product away from the device or plug either into a different outlet. Do not install this product near maritime safety equipment or other critical navigation or communication equipment operating between 0.45-30 MHz. Not intended for use with emergency exit fixtures or lights, in totally enclosed recessed fixtures, or with dimmers. Added weight may cause instability of free-standing portable lamps. Use only with portable lamps in which the distance from the bottom of the base to the top of the lamp holder does not exceed three times the base width. Use only with portable lamps which are provided with lamp shades.

GE2010-9353

⚠ CAUTION

Risk of electric shock

- Do not use where directly exposed to water
- Do not open - no user serviceable parts inside

Lamp may shatter and cause injury if broken

- Remove and install by grasping only plastic portion of the lamp

This product complies with Part 18 of the FCC Rules, but may cause interference to radios, televisions, wireless telephones, and remote controls. Avoid placing this product near these devices. If interference occurs, move the product away from the device or plug either into a different outlet. Do not install this product near maritime safety equipment or other critical navigation or communication equipment operating between 0.45 - 30 MHz. Not intended for use with emergency exit fixtures or lights, or with dimmers. Not for use in enclosed fixtures.

GE2023-6025

⚠ CAUTION

Risk of electric shock

- Do not use where directly exposed to water
- Do not open - no user serviceable parts inside

This product complies with Part 18 of the FCC Rules, but may cause interference to radios, televisions, wireless telephones, and remote controls. Avoid placing this product near these devices. If interference occurs, move the product away from the device or plug either into a different outlet. Do not install this product near maritime safety equipment or other critical navigation or communication equipment operating between 0.45 - 30 MHz. Not intended for use with emergency exit fixtures or lights, or with dimmers. Not for use in enclosed fixtures.

GE2024-7455

⚠ CAUTION

Risk of electric shock

- Do not use where directly exposed to water
- Do not open - no user serviceable parts inside

This product complies with Part 18 of the FCC Rules, but may cause interference to radios, televisions, wireless telephones, and remote controls. Avoid placing this product near these devices. If interference occurs, move the product away from the device or plug either into a different outlet. Do not install this product near maritime safety equipment or other critical navigation or communication equipment operating between 0.45 - 30 MHz. Not intended for use with emergency exit fixtures or lights, or with dimmers.

GE2024-7456

⚠ CAUTION

Risk of electric shock

- Do not open—no user serviceable parts inside
- Do not use where directly exposed to water or outdoors without an enclosed fixture

This product complies with Part 18 of the FCC Rules, but may cause interference to radios, televisions, wireless telephones, and remote controls. Avoid placing this product near these devices. If interference occurs, move the product away from the device or plug either into a different outlet. Do not install this product near maritime safety equipment or other critical navigation or communication equipment operating between 0.45-30 MHz. Not intended for use with emergency exit fixtures or lights, electronic timers, photocells, dimmers, or in totally enclosed recessed fixtures.

GE2025-1509

⚠ CAUTION

Risk of electric shock

- Do not use where directly exposed to water
- Do not open - no user serviceable parts inside

This product complies with Part 18 of the FCC Rules, but may cause interference to radios, televisions, wireless telephones, and remote controls. Avoid placing this product near these devices. If interference occurs, move the product away from the device or plug either into a different outlet. Do not install this product near maritime safety equipment or other critical navigation or communication equipment operating between 0.45 - 30 MHz. Not intended for use with emergency exit fixtures or lights. Performance ratings are based on base up orientation.

Do not operate this product in ambient temperatures exceeding xx°C

Cross-Reference

GE Description	GE Product Code	Generic Description	Osram/Sylvania Description	Philips Description
Order This GE Lamp		If you currently use these lamps		
Low Wattage Biax® 2-Pin				
F5BX/827/ECO	97551	CFT5W/G23/827	CF5DS/827/ECO	PL-S 5W/827/2P/Alto
F5BX/841/ECO	97553	CFT5W/G23/841	CF5DS/841/ECO	PL-S 5W/841/2P/Alto
F7BX/827/ECO	97554	CFT7W/G23/827	CF7DS/827/ECO	PL-S 7W/827/2P/Alto
F7BX/835/ECO	97556	CFT7W/G23/835	CF7DS/835/ECO	PL-S 7W/835/2P/Alto
F7BX/841/ECO	97557	CFT7W/G23/841	CF7DS/841/ECO	PL-S 7W/841/2P/Alto
F9BX/827/ECO	97558	CFT9W/G23/827	CF9DS/827/ECO	PL-S 9W/827/2P/Alto
F9BX/835/ECO	97560	CFT9W/G23/835	CF9DS/835/ECO	PL-S 9W/835/2P/Alto
F9BX/841/ECO	97561	CFT9W/G23/841	CF9DS/841/ECO	PL-S 9W/841/2P/Alto
F13BX/827/ECO	97573	CFT13W/GX23/827	CF13DS/827/ECO	PL-S 13W/827/2P/Alto
F13BX/830/ECO	97574	CFT13W/GX23/830	CF13DS/830/ECO	PL-S 13W/830/2P/Alto
F13BX/835/ECO	97569	CFT13W/GX23/835	CF13DS/835/ECO	PL-S 13W/835/2P/Alto
F13BX/841/ECO	97571	CFT13W/GX23/841	CF13DS/841/ECO	PL-S 13W/841/2P/Alto
F13BX/850/ECO	97572	CFT13W/GX23/850	CF13DS/850/ECO	PL-S 13W/850/2P/Alto
F13BX/E/830/ECO	97563	CFT13W/GX23/830	CFT13WDS/EC/830/ECO	–
High Lumen Biax® 4-Pin				
F18BX/SPX30	16649	FT18W/2G11/830	FT18DL/830	PL-L 18W/830
F18BX/SPX35	16053	FT18W/2G11/835	FT18DL/835	PL-L 18W/835
F18BX/SPX41	16940	FT18W/2G11/841	FT18DL/841	PL-L 18W/841
F18BX/SPX30/RS	17174	FT18W/2G11/RS/830	FT18DL/830/RS	–
F18BX/SPX35/RS	17175	FT18W/2G11/RS/835	FT18DL/835/RS	–
F18BX/SPX65/RS	12521	FT18W/2G11/RS/865	–	–
F27BX/SPX30/RS	16944	FT24W/2G11/830	FT24DL/830	PL-L 24W/830
F27BX/SPX35/RS	16948	FT24W/2G11/835	FT24DL/835	PL-L 24W/835
F27BX/SPX41/RS	16951	FT24W/2G11/841	FT24DL/841	PL-L 24W/841
F39BX/SPX30/RS	16538	FT36W/2G11/830	FT36DL/830	PL-L 36W/830
F39BX/SPX35/RS	15867	FT36W/2G11/835	FT36DL/835	PL-L 36W/835
F39BX/SPX41/RS	16952	FT36W/2G11/841	FT36DL/841	PL-L 36W/841
F40/25/BX830/IS/WM	75399	FT40W/2G11/IS/830	F40DL/28W/830/SS/ IS/ECO	PL-L 40W/830/XEW/4P/ IS 25W
F40/25/BX835/IS/WM	75400	FT40W/2G11/IS/835	F40DL/28W/835/SS/ IS/ECO	PL-L 40W/835/XEW/4P/ IS 25W
F40/25/BX841/IS/WM	75401	FT40W/2G11/IS/841	F40DL/28W/841/SS/ IS/ECO	PL-L 40W/841/XEW/4P/ IS 25W
F40/25/BX850/IS/WM	75402	FT40W/2G11/IS/850	–	–
F40/30BX/SPX30	16953	FT40W/2G11/RS/830	FT40DL/830/RS	PL-L 40W/830/RS/IS
F40/30BX/SPX35	16648	FT40W/2G11/RS/835	FT40DL/835/RS	PL-L 40W/835/RS/IS
F40/30BX/SPX41	16954	FT40W/2G11/RS/841	FT40DL/841/RS	PL-L 40W/841/RS/IS
F40/30BX/SPX50/RS	10490	FT40W/2G11/RS/850	FT40DL/850/RS	–
F50BXSPX30RS	20898	FT50W/2G11/RS/830	–	PL-L 50W/830/RS
F50BXSPX35RS	20899	FT50W/2G11/RS/835	–	PL-L 50W/835/RS
F50BXSPX41RS	20900	FT50W/2G11/RS/841	–	PL-L 50W/841/RS
F55BX/830	31951	FT55W/2G11/RS/830	FT55DL/830	–
F55BX/835	31952	FT55W/2G11/RS/835	FT55DL/835	–
F55BX/841	31953	FT55W/2G11/RS/841	FT55DL/841	–
Double Biax® 2-Pin				
F9DBX23/827/ECO	97576	CFQ9W/G23/827	CF9DD/827	–
F9DBX23/841/ECO	97575	CFQ9W/G23/841	–	–
F13DBX23/827/ECO	97586	CFQ13W/GX23/827	CF13DD/827	PL-C 13W/827/USA/Alto
F13DBX23/830/ECO	97587	CFQ13W/GX23/830	CF13DD/830	PL-C 13W/830/USA/Alto
F13DBX23/835/ECO	97588	CFQ13W/GX23/835	CF13DD/835	PL-C 13W/835/USA/Alto
F13DBX23/841/ECO	97589	CFQ13W/GX23/841	CF13DD/841	PL-C 13W/841/USA/Alto
F13DBX/827/ECO	97590	CFQ13W/G24d/827	–	PL-C 13W/827/Alto
F13DBX/830/ECO	97591	CFQ13W/G24d/830	–	PL-C 13W/830/Alto
F13DBX/835/ECO	97592	CFQ13W/G24d/835	–	–
F13DBX/841/ECO	97593	CFQ13W/G24d/841	–	–
F18DBX/827/ECO	97577	CFQ18W/G24d/827	CF18DD/827	PL-C 18W/827/Alto
F18DBX/830/ECO	97578	CFQ18W/G24d/830	CF18DD/830	PL-C 18W/830/Alto
F18DBX/835/ECO	97579	CFQ18W/G24d/835	CF18DD/835	PL-C 18W/835/Alto
F18DBX/841/ECO	97580	CFQ18W/G24d/841	CF18DD/841	PL-C 18W/841/Alto
F26DBX/827/ECO	97606	CFQ26W/G24d/827	CF26DD/827	PL-C 26W/827/Alto

GE Description	GE Product Code	Generic Description	Osram/Sylvania Description	Philips Description
Order This GE Lamp		If you currently use these lamps		
Double Biax® 2-Pin (continued)				
F26DBX/830/ECO	97607	CFQ26W/G24d/830	CF26DD/830	PL-C 26W/830/Alto
F26DBX/835/ECO	97608	CFQ26W/G24d/835	CF26DD/835	PL-C 26W/835/Alto
F26DBX/841/ECO	97609	CFQ26W/G24d/841	CF26DD/841	PL-C 26W/841/Alto
F26DBX/E/827/ECO	97602	CFQ26W/G24d/827	–	–
F26DBX/E/835/ECO	97604	CFQ26W/G24d/835	–	–
Double Biax® 4-Pin				
F13DBX/827/ECO4P	97594	CFQ13W/G24q/827	CF13DD/E/827	PL-C 13W/827/4P/Alto
F13DBX/830/ECO4P	97595	CFQ13W/G24q/830	CF13DD/E/830	PL-C 13W/830/4P/Alto
F13DBX/835/ECO4P	97596	CFQ13W/G24q/835	CF13DD/E/835	PL-C 13W/835/4P/Alto
F13DBX/841/ECO4P	97597	CFQ13W/G24q/841	CF13DD/E/841	PL-C 13W/841/4P/Alto
F18DBX/827/ECO4P	97598	CFQ18W/G24q/827	CF18DD/E/827	PL-C 18W/827/4P/Alto
F18DBX/830/ECO4P	97599	CFQ18W/G24q/830	CF18DD/E/830	PL-C 18W/830/4P/Alto
F18DBX/835/ECO4P	97600	CFQ18W/G24q/835	CF18DD/E/835	PL-C 18W/835/4P/Alto
F18DBX/841/ECO4P	97601	CFQ18W/G24q/841	CF18DD/E/841	PL-C 18W/841/4P/Alto
F26DBX/827/ECO4P	97610	CFQ26W/G24q/827	CF26DD/E/827	PL-C 26W/827/4P/Alto
F26DBX/830/ECO4P	97611	CFQ26W/G24q/830	CF26DD/E/830	PL-C 26W/830/4P/Alto
F26DBX/835/ECO4P	97612	CFQ26W/G24q/835	CF26DD/E/835	PL-C 26W/835/4P/Alto
F26DBX/841/ECO4P	97613	CFQ26W/G24q/841	CF26DD/E/841	PL-C 26W/841/4P/Alto
Triple Biax® 4-Pin				
F13TBX827/4P/ECO	97623	CFTR13W/GX24q/827	CF13DT/E/827	PL-T 13W/827/X/4P/Alto
F13TBX/827/A/ECO	97519	CFTR13W/GX24q/827	–	–
F13TBX/830/A/ECO	97620	CFTR13W/GX24q/830	–	–
F13TBX/835/A/ECO	97621	CFTR13W/GX24q/835	–	–
F13TBX/841/A/ECO	97622	CFTR13W/GX24q/841	–	–
F18TBX827/4P/ECO	97628	CFTR18W/GX24q/827	CF18DT/E/827	PL-T 18W/827/X/4P/Alto
F18TBX/827/A/ECO	97624	CFTR18W/GX24q/827	CF18DT/E/IN/827	PL-T 18W/827/4P/Alto
F18TBX/830/A/ECO	97625	CFTR18W/GX24q/830	CF18DT/E/IN/830	PL-T 18W/830/4P/Alto
F18TBX/835/A/ECO	97626	CFTR18W/GX24q/835	CF18DT/E/IN/835	PL-T 18W/835/4P/Alto
F18TBX/841/A/ECO	97627	CFTR18W/GX24q/841	CF18DT/E/IN/841	PL-T 18W/841/4P/Alto
F26TBX827/4P/ECO	97618	CFTR26W/GX24q/827	CF26DT/E/827	PL-T 26W/827/X/4P/Alto
F26TBX/827/A/ECO	97614	CFTR26W/GX24q/827	CF26DT/E/IN/827	PL-T 26W/827/4P/Alto
F26TBX/830/A/ECO	97615	CFTR26W/GX24q/830	CF26DT/E/IN/830	PL-T 26W/830/4P/Alto
F26TBX/835/A/ECO	97616	CFTR26W/GX24q/835	CF26DT/E/IN/835	PL-T 26W/835/4P/Alto
F26TBX/841/A/ECO	97617	CFTR26W/GX24q/841	CF26DT/E/IN/841	PL-T 26W/841/4P/Alto
F32TBX/827/A/ECO	97629	CFTR32W/GX24q/827	CF32DT/E/IN/827	PL-T 32W/827/4P/Alto
F32TBX/830/A/ECO	97630	CFTR32W/GX24q/830	CF32DT/E/IN/830	PL-T 32W/830/4P/Alto
F32TBX/835/A/ECO	97631	CFTR32W/GX24q/835	CF32DT/E/IN/835	PL-T 32W/835/4P/Alto
F32TBX/841/A/ECO	97632	CFTR32W/GX24q/841	CF32DT/E/IN/841	PL-T 32W/841/4P/Alto
F42TBX/827/A/ECO	97633	CFTR42W/GX24q/827	CF42DT/E/IN/827	PL-T 42W/827/4P/Alto
F42TBX/830/A/ECO	97634	CFTR42W/GX24q/830	CF42DT/E/IN/830	PL-T 42W/830/4P/Alto
F42TBX/835/A/ECO	97635	CFTR42W/GX24q/835	CF42DT/E/IN/835	PL-T 42W/835/4P/Alto
F42TBX/841/A/ECO	97636	CFTR42W/GX24q/841	CF42DT/E/IN/841	PL-T 42W/841/4P/Alto
High Output Biax® 4-Pin				
F57QBX827A4P/EOL	48861	CFM57W/GX24q/827	CF57DT/E/IN/827	–
F57QBX835A4P/EOL	48863	CFM57W/GX24q/835	CF57DT/E/IN/835	PL-T 57W/835/4P/A
F57QBX841A4P/EOL	48864	CFM57W/GX24q/841	CF57DT/E/IN/841	PL-T 57W/841/4P/A
F57QBX850A4P/EOL	93404	CFM57W/GX24q/850	–	–
F70QBX827A4P/EOL	48865	CFM70W/GX24q/827	–	–
F70QBX830A4P/EOL	48866	CFM70W/GX24q/830	–	–
F70QBX835A4P/EOL	48867	CFM70W/GX24q/835	–	–
F70QBX841A4P/EOL	48868	CFM70W/GX24q/841	–	–
F70QBX850A4P/EOL	93406	CFM70W/GX24q/850	–	–

GE Enhanced Plug-in Product Conversion

PC	PC Description	New PC	New Description
If you used to order GE product:		Now order GE product:	
37654	F5BX/SPX27/827	97551	F5BX/827/ECO
37661	F5BX/SPX41/840	97553	F5BX/841/ECO
37846	F7BX/SPX27/827	97554	F7BX/827/ECO
37659	F7BX/SPX35/835	97556	F7BX/835/ECO
37660	F7BX/SPX41/840	97557	F7BX/841/ECO
37651	F9BX/SPX27/827	97558	F9BX/827/ECO
37652	F9BX/SPX35/835	97560	F9BX/835/ECO
37653	F9BX/SPX41/840	97561	F9BX/841/ECO
41645	F13BX/E/827	97562	F13BX/E/827/ECO
41646	F13BX/E/830	97563	F13BX/E/830/ECO
17048	F13BX/SPX35/835	97569	F13BX/835/ECO
20434	F13BX/SPX41/840	97571	F13BX/841/ECO
11671	F13BX/SPX50	97572	F13BX/850/ECO
14650	F13BXSPX27/827	97573	F13BX/827/ECO
17612	F13BXSPX30/830	97574	F13BX/830/ECO
42065	F9DBX23T4/841	97575	F9DBX23/841/ECO
12409	F9DBX23T4SPX27/8	97576	F9DBX23/827/ECO
18844	F13DBX23T4/SPX27	97586	F13DBX23/827/ECO
10574	F13DBX23T4/SPX30	97587	F13DBX23/830/ECO
18556	F13DBX23T4/SPX35	97588	F13DBX23/835/ECO
20531	F13DBX23T4/SPX41	97589	F13DBX23/841/ECO
18557	F13DBXT4/SPX27	97590	F13DBX/827/ECO
12956	F13DBXT4/SPX30	97591	F13DBX/830/ECO
18559	F13DBXT4/SPX35	97592	F13DBX/835/ECO
20532	F13DBXT4/SPX41	97593	F13DBX/841/ECO
30035	F13DBX/SPX27/4P	97594	F13DBX/827/ECO4P
10580	F13DBX/SPX30/4P	97595	F13DBX/830/ECO4P
30037	F13DBX/SPX35/4P	97596	F13DBX/835/ECO4P
30038	F13DBX/SPX41/4P	97597	F13DBX/841/ECO4P
12860	F18DBXT4/SPX27	97577	F18DBX/827/ECO
12861	F18DBXT4/SPX30	97578	F18DBX/830/ECO
12863	F18DBXT4/SPX35	97579	F18DBX/835/ECO
12864	F18DBXT4/SPX41	97580	F18DBX/841/ECO
12865	F18DBX/SPX27/4P	97598	F18DBX/827/ECO4P
12866	F18DBX/SPX30/4P	97599	F18DBX/830/ECO4P
12869	F18DBX/SPX35/4P	97600	F18DBX/835/ECO4P
12870	F18DBX/SPX41/4P	97601	F18DBX/841/ECO4P
46290	F26DBX/E/827	97602	F26DBX/E/827/ECO
46292	F26DBX/E/835	97604	F26DBX/E/835/ECO
35250	F26DBXT4/SPX27	97606	F26DBX/827/ECO
35237	F26DBXT4/SPX30	97607	F26DBX/830/ECO
35251	F26DBXT4/SPX35	97608	F26DBX/835/ECO
35252	F26DBXT4/SPX41	97609	F26DBX/841/ECO
35247	F26DBXT4SPX27/4P	97610	F26DBX/827/ECO4P
35235	F26DBXT4SPX30/4P	97611	F26DBX/830/ECO4P
35248	F26DBXT4SPX35/4P	97612	F26DBX/835/ECO4P
35236	F26DBXT4SPX41/4P	97613	F26DBX/841/ECO4P
34391	F13TBX/SPX27/A/4	97619	F13TBX/827/A/ECO
34395	F13TBX/SPX30/A/4	97620	F13TBX/830/A/ECO
34400	F13TBX/SPX35/A/4	97621	F13TBX/835/A/ECO
34387	F13TBX/SPX41/A/4	97622	F13TBX/841/A/ECO
47696	F13TBX827/4P/EOL	97623	F13TBX827/4P/ECO
34392	F18TBX/SPX27/A/4	97624	F18TBX/827/A/ECO
34396	F18TBX/SPX30/A/4	97625	F18TBX/830/A/ECO
34405	F18TBX/SPX35/A/4	97626	F18TBX/835/A/ECO
34385	F18TBX/SPX41/A/4	97627	F18TBX/841/A/ECO
48869	F18TBX827/4P/EOL	97628	F18TBX827/4P/ECO
34393	F26TBX/SPX27/A/4	97614	F26TBX/827/A/ECO
34397	F26TBX/SPX30/A/4	97615	F26TBX/830/A/ECO
34406	F26TBX/SPX35/A/4	97616	F26TBX/835/A/ECO
34381	F26TBX/SPX41/A/4	97617	F26TBX/841/A/ECO
48870	F26TBX827/4P/EOL	97618	F26TBX827/4P/ECO
39377	F32TBX/SPX27A/4P	97629	F32TBX/827/A/ECO

PC	PC Description	New PC	New Description
If you used to order GE product:		Now order GE product:	
39378	F32TBX/SPX30A/4P	97630	F32TBX/830/A/ECO
39379	F32TBX/SPX35A/4P	97631	F32TBX/835/A/ECO
39380	F32TBX/SPX41A/4P	97632	F32TBX/841/A/ECO
46312	F42TBX827A4P/EOL	97633	F42TBX/827/A/ECO
46313	F42TBX830A4P/EOL	97634	F42TBX/830/A/ECO
46314	F42TBX835A4P/EOL	97635	F42TBX/835/A/ECO
46315	F42TBX841A4P/EOL	97636	F42TBX/841/A/ECO
48861	F57QBX/827/A/4P/EOL	48861	F57QBX/827/A/ECO
48862	F57QBX/830/A/4P/EOL	48862	F57QBX/830/A/ECO
48863	F57QBX/835/A/4P/EOL	48863	F57QBX/835/A/ECO
48864	F57QBX/841/A/4P/EOL	48864	F57QBX/841/A/ECO
93404	F57QBX/850/A/4P/EOL	93404	F57QBX/850/A/ECO
48865	F70QBX/827/A/4P/EOL	48865	F70QBX/827/A/ECO
48866	F70QBX/830/A/4P/EOL	48866	F70QBX/830/A/ECO
48867	F70QBX/835/A/4P/EOL	48867	F70QBX/835/A/ECO
48868	F70QBX/841/A/4P/EOL	48868	F70QBX/841/A/ECO
93406	F70QBX/850/A/4P/EOL	93406	F70QBX/850/A/ECO

LED Lamps, Tubes and Modules

LED Lamps, Tubes and Modules

Introduction

A GE scientist invented the first visible LED in 1962, pioneering a technology that is revolutionizing the lighting industry. GE is also one of the largest LED systems companies in the world. But it's not only about size. We're dedicated to LED performance on your behalf. That's why we are helping to develop a universal set of performance measures so you can make an informed decision.

Product Information

LED Lamps and Tubes

Quality

The first time you turn on GE LED replacement lamps, you'll be amazed by the color, distribution, output and uniformity. The proof is in your "before and after" environment. In addition, every LED system comes with a product life rating that recognizes acceptable light output for its intended application, ensuring that you won't be left in the dark.

Long Life

GE's LED replacement lamps are sturdy, dependable and long lasting. Depending on the lamp, you can expect up to 50,000 hours of rated life. That's 12 hours a day, every day of the year, for over a decade.

Innovation

We continually invest in new products and are often the first to market with the latest upgrades, including light sources, luminaires and controls for a system that's both efficient and effective.

ENERGY STAR®

In addition to energy savings, ENERGY STAR® qualified LED lamps can further reduce the overall cost of ownership through lamp rebate incentives. Good news for you is that GE has the most ENERGY STAR® rated LEDs. According to ENERGY STAR® guidelines, the benefits of an ENERGY STAR® qualified LED lamp include:

- Uses about 75% less energy than a traditional incandescent lamp
- Lasts at least 6 times longer than an incandescent lamp
- Turns on instantly—there's no warm up time

Total System Solutions

Anyone can install a lamp. What we implement are lighting strategies and solutions. Our products are designed to benefit you from an overall performance perspective.

Proven Track Record

We've been here. We'll be here. Built into each of GE's LED replacement lamps is 125 years of experience, reliability and innovation. Every performance claim we make is supported by stringent, comprehensive testing —ensuring that your lighting investment pays off today and in the future.

Trusted Advisor

From the start, we provide a comprehensive lighting audit of existing systems, provide photometric analysis with 3D renderings of the new system, and forecast energy and maintenance savings. We also search out opportunities for improvement you may not have considered.

Short Payback Period

Decreased energy and maintenance costs, combined with utility rebates, deliver results that often exceed your expectations.

Family of Solutions

Directional. Omni-directional. Decorative. Dimming. Tight optical control. Accent. Task. Display. Indoor. Outdoor. You name it—we've got it in LED.

Infusion™ LED Module

GE Infusion™ is a game-changing technology and one of the most flexible LED lighting solutions on the market. As a designer, OEM, or end-users, you can choose from an extensive selection of modules. Plus, there's the assurance of GE reliability and performance.

- Built for the Future: If lighting needs change or LED technology advances, there is no need to buy new fixtures. Simply twist in the latest GE Infusion™ LED Module.
- Environmentally Conscious: The Infusion™ LED Module can use fewer materials than integral LED fixtures because only the module is replaced at the end of lamp life—not the entire light fixture.
- Customizable: Select the module with the light level or color quality that meets your needs. The Infusion™ LED Module dims using a variety of dimming protocols including 0-10V, Phase and DALI.
- Compatible: Ideal for fixture manufacturers designing for track, recessed, pendant or other types of luminaires around one compatible solution—no need for multiple base designs.

Bulb Shape	Base Type	Watts	Order Code	Description	Volts	Case Qty	MOL (in)	Lumens Initial	CBCP	Initial Color Temp	CRI	†Wattage Equivalency	*Rated Life – Hours L70	Dimmable	††ENERGY STAR®	‡Location Rating	Additional Information
LED Decorative Lamps																	
LED Candles (1.8W candles are 10-watt incandescent replacements – based on ENERGY STAR® requirements for lumens)																	
CA11	Med	3.5	68168	LED3DCAM-C/TP	120	3	4.2	170		2700	80	25W	15,000	▲		Damp	Clear, Bent Tip
		4	21250	LED4DCAM-C3/827	120	6	4.2	300		2700	80	40W	15,000	▲	★	Damp	Clear, Bent Tip
		4	75554	LED4DCAMCF/824	120	6	4.2	250		2400	76	25W	15,000	▲		Damp	Clear, Bent Tip
		4.5	68167	LED4DCAM-F/TP	120	3	4.2	270		2700	82	25W	15,000	▲		Damp	Frost, Blunt Tip
		7	21251	LED7DCAM-C3/827	120	6	4.8	500		2700	80	60W	15,000	▲	★	Damp	Clear, Bent Tip
	E16	4	69111	LED4DCAM-C3/850	120	6	4.2	300		5000	80	40W	15,000	▲		Damp	Clear, Bent Tip
	Cand	3.5	68166	LED3DCAC-C/TP	120	3	4.3	170		2700	80	25W	15,000	▲		Damp	Clear, Bent Tip
		4	21231	LED4DCAC-C3/827	120	6	4.3	300		2700	80	40W	15,000	▲	★	Damp	Clear, Bent Tip
		4	69109	LED4DCAC-C3/850	120	6	4.3	300		2700	80	40W	15,000	▲		Damp	Clear, Bent Tip
		4	75553	LED4DCACCF/824	120	6	4.3	250		2400	76	25W	15,000	▲		Damp	Clear, Bent Tip
		4.5	68165	LED4DCAC-F/TP	120	3	4.3	270		2700	82	25W	15,000	▲		Damp	Frost, Bent Tip
		7	21233	LED7DCAC-C3/827	120	6	4.8	500		2700	80	60W	15,000	▲	★	Damp	Clear, Bent Tip
LED Globes (1.8W candles are 10-watt and 2.3W candles are 15-watt incandescent replacements – based on ENERGY STAR® requirements for lumens)																	
G16.5	Cand	4.5	68169	LED4DG16C-W/TP	120	3	3.0	270		2700	82	25W	15,000	▲		Damp	White
		4.5	68170	LED4DG16C-C/TP	120	3	3.0	270		2700	82	25W	15,000	▲		Damp	Clear
G25	Med	4.5	68171	LED4DG25M-W/TP	120	3	4.3	280		2700	82	25W	15,000	▲		Damp	White
		4.5	68172	LED4DG25M-C/TP	120	3	4.3	280		2700	82	25W	15,000	▲		Damp	Clear
		5	21253	LED5DG25-W3/827	120	6	4.3	350		2700	80	40W	15,000	▲	★	Damp	White
		7	21255	LED7DG25-W3/827	120	6	4.3	500		2700	80	60W	15,000	▲	★	Damp	White
LED Night Lights																	
C7	Cand	0.5	13887	LED0.5C7/C/CD2	120	6	2			2700	80		25,000			Dry	Clear
		0.5	14150	LED0.5C7/W/CD2	120	6	2			2700	80		25,000			Dry	White
LED Filament Lamps																	
CA11	E12	3	75915	LED3DCAC-V	120	6	4.4	300		2500	80	40W	15,000	▲		Damp	Bent Tip, Vintage Filament
	Cand	3	75914	LED3DCAM-V	120	6	4.4	300		2500	80	40W	15,000	▲		Damp	Bent Tip, Vintage Filament
ST19	Med	3	76018	LED3DST19-V	120	6	5	440		2500		25W	15,000	▲		Damp	Vintage Filament
		5	33025	LED5DST19-V-OT2P	120	8	5	440		2500		40W	15,000	▲		Damp	4, 2-packs, Vintage Filament
LED A-Line Lamps																	
LED A-15																	
A-15	Med	3	92122	LED3A15RED	120	3	3.5			Red			15,000			Damp	Red
		3	92125	LED3A15BLUE	120	3	3.5			Blue			15,000			Damp	Blue
		3	92126	LED3A15GREEN	120	3	3.5			Green			15,000			Damp	Green
		3	92132	LED3A15PINK	120	3	3.5			Pink			15,000			Damp	Pink
		3	23054	LED3A15ORNG	120	3	3.5			Orange			15,000			Damp	Orange
		4	34038	LED4DA15-W3/827	120	6	3.5	300		2700	80	40W	15,000	▲		Damp	White
		4	34051	LED4DA15-C3/827	120	6	3.5	300		2700	80	40W	15,000	▲		Damp	Clear
		4.5	83645	LED4.5DA15C-FRIG	120	3	3.5	350		5000	80	40W	15,000	▲		Damp	Clear Refrigerator Bulb
LED A-19 (The 9W A-19s are 40-watt and the 13W A-19s are 60-watt incandescent replacements – based on ENERGY STAR® requirements for lumens)																	
A-19	Med	6	69115	LED6DA19/827	120	6	4.4	480		2700	80	40W	15,000	▲	★	Damp	White, Omnidirectional, ES 2.0
		6	69118	LED6DA19/830	120	6	4.4	480		3000	80	40W	15,000	▲	★	Damp	White, Omnidirectional, ES 2.0
		6	69132	LED6DA19/840	120	6	4.4	480		4000	80	40W	15,000	▲	★	Damp	White, Omnidirectional, ES 2.0
		6	69144	LED6DA19/850	120	6	4.4	480		5000	80	40W	15,000	▲	★	Damp	White, Omnidirectional, ES 2.0
		7	89944	LED7DAV3/5K/BX	120	4	4.63	500		5000	80	40W	25,000	▲		Damp	White, Semi-Omni
		7	14063	LED7DAV3/827W	120	6	4.63	470		2700	80	40W	25,000	▲		Damp	White, Semi-Omni
		7	34238	LED7DA19/824	120	6	4.44	450		2400	80	40W	25,000	▲		Damp	White
		7	11332	LED7DA19/827	120	6	4.43	450		2700	80	40W	25,000	▲		Damp	White, Omnidirectional
		7	71208	LED7DA19/830	120	6	4.43	450		3000	80	40W	25,000	▲		Damp	White, Omnidirectional
		7	95928	LED7DAV3/5K	120	6	4.63	500		5000	80	40W	25,000	▲		Damp	White, Semi-Omni

* The life rating is based on the hours of operation the lamp will provide before reaching 70% of its original lumen rating (L70).
** Minimum order quantity = 6
† Incandescent or halogen wattage equivalencies based on Energy Star guidelines using lumens or CBPB according to lamp type
†† Energy Star status: Certified as meeting Energy Star guidelines.
‡ UL 1993 Environmental Requirements for LED Lamps.
Location, damp – Exterior or interior location that is normally or periodically subject to condensation of moisture in, on, or adjacent to electrical equipment, and includes partially protected locations.
Location, dry – Location not normally subject to dampness, may include a location subject to temporary dampness, i.e., building under construction, provided ventilation is adequate to prevent an accumulation of moisture.
Location, wet – Location in which water or other liquid can drip, splash, or flow on or against electrical equipment.
Note: Product descriptions ending in "/TP" indicate a carded blister or clamshell package nested in a tray for shelf display. Cards also designed for hook display.

LED Lamps, Tubes and Modules

Bulb Shape	Base Type	Watts	Order Code	Description	Volts	Case Qty	MOL (in)	Lumens Initial	CBCP	Initial Color Temp	CRI	†Wattage Equivalency	*Rated Life – Hours L70	Dimmable	††ENERGY STAR®	‡Location Rating	Additional Information
LED A-Line Lamps (continued)																	
LED A-19 (continued)	**(The 9W A-19s are 40-watt and the 13W A-19s are 60-watt incandescent replacements – based on ENERGY STAR® requirements for lumens)**																
A-19 	Med	10	69117	LED10DA19/827	120	6	4.4	800		2700	80	60W	15,000	▲	★	Damp	White, Omnidirectional, ES 2.0
		10	69119	LED10DA19/830	120	6	4.4	800		3000	80	60W	15,000	▲	★	Damp	White, Omnidirectional, ES 2.0
		10	69133	LED10DA19/840	120	6	4.4	800		4000	80	60W	15,000	▲	★	Damp	White, Omnidirectional, ES 2.0
		10	69146	LED10DA19/850	120	6	4.4	800		5000	80	60W	15,000	▲	★	Damp	White, Omnidirectional, ES 2.0
		10.5	95927	LED11DA19/5K	120	6	4.43	850		5000	80	60W	15,000	▲		Damp	White, Semi-Omni
		10.5	13791	LED11DAV3/827W	120	6	4.63	800		2700	80	60W	15,000	▲		Damp	White, Semi-Omni
		11	29268	LED11DA19/824	120	6	4.44	800		2400	80	60W	25,000	▲		Damp	White, Omnidirectional
		11	11328	LED11DA19/827	120	6	4.43	800		2700	80	60W	25,000	▲		Damp	White, Omnidirectional
		11	71209	LED11DA19/830	120	6	4.43	800		3000	80	60W	25,000	▲		Damp	White, Omnidirectional
	GU24	11	74357	LED11DA19827GU24	120	6	5.43	800		2700	80	60W	25,000	▲		Damp	White, Omnidirectional
LED A-21																	
A-21 	GU24	12	73384	LED12DA21F/830FE	120	6	5.31	1100		3000	80	100W	25,000	▲		Enclosed	White, Enclosed, Omnidi-rectional
		12	73404	LED12DA21/850FE	120	6	5.31	1100		5000	80	100W	25,000	▲		Enclosed	White, Enclosed, Omnidi-rectional
	Med	13	12422	LED13DA212/827	120	6	5.28	1100		2700	80	75W	25,000	▲		Damp	White, Omnidirectional
		14	94936	LED14DA21/827W	120	6	5.28	1100		2700	80	75W	15,000	▲			White, Semi-Omni
		16	12349	LED16DA212/827	120	6	5.28	1600		2700	80	100W	25,000	▲		Damp	White, Omnidirectional
		16	12399	LED16DA212/830	120	6	5.28	1600		3000	80	100W	25,000	▲		Damp	White, Omnidirectional
	GU24	16	92498	LED16DA21827GU24	120	6	5.43	1600		2700	80	100W	25,000	▲		Damp	White, Omnidirectional
	Med	16	92118	LED16A30/100/5KB	120	3	5.31	400/ 1600/ 1050		5000	80	30W/ 70W/ 100W	25,000		★	Damp	White, 3-Way
		16	73376	LED16A30/100/827	120	6	5.31	360/ 1400/ 900		2700	80	30W/ 70W/ 100W	25,000		★	Damp	White, 3-Way
		17	34369	LED17DA21/5K/BX	120	4	5.28	1600		5000	80	100W	15,000	▲		Damp	White, Semi-Omni
		17	16113	LED17DA21/827	120	6	5.28	1600		2700	78	100W	15,000	▲		Damp	White, Semi-Omni
		17	23006	LED17DA221XSW	120	4	5.28	1520		2700	85	100W	15,000	▲		Damp	White, Semi-Omni
		22	73378	LED22A50/150/827	120	6	5.31	700/ 2155/ 1600		2700	80	50W/ 100W/ 150W	25,000			Damp	White, 3-Way
		22	92120	LED22A50/150/5KB	120	3	5.31	700/ 2155/ 1600		5000	80	50W/ 100W/ 150W	25,000			Damp	White, 3-Way
LED Bright Stik																	
	Med	5.5	66256	LED5.5LS3/827	120	48	4.45	450		2700	80	40W	15,000		★	Damp	Case = 16 3-pack, ES 2.0
		5.5	75177	LED5.5LS3/850	120	48	4.45	450		5000	80	40W	15,000		★	Damp	Case = 16 3-pack, ES 2.0
		6	35517	LED6LS3/828	120	48	4.45	450		2850	80	40W	15,000			Indoor	Case = 16 3-pack
		6	35519	LED6LS3/850	120	48	4.45	450		5000	80	40W	15,000			Indoor	Case = 16 3-pack
		9	75184	LED9LS3/827	120	48	4.45	800		2700	80	60W	15,000		★	Damp	Case = 16 3-pack, ES 2.0
		9	75588	LED9LS3/850	120	48	4.45	800		5000	80	60W	15,000		★	Damp	Case = 16 3-pack, ES 2.0
		10	28089	LED10LS3/828	120	48	4.45	760		2850	80	60W	15,000			Indoor	Case = 16 3-pack
		10	32273	LED10LS3/850	120	48	4.45	760		5000	80	60W	15,000			Indoor	Case = 16 3-pack
		14	35520	LED14LS2/828	120	32	5.24	1060		2850	80	75W	15,000			Indoor	Case = 16 2-pack
		14	35522	LED14LS2/850	120	32	5.24	1060		5000	80	75W	15,000			Indoor	Case = 16 2-pack
		16	35523	LED16LS2/828	120	32	5.24	1520		2850	80	100W	15,000			Indoor	Case = 16 2-pack
		16	35524	LED16LS2/850	120	32	5.24	1520		5000	80	100W	15,000			Indoor	Case = 16 2-pack
LED Reflector Lamps																	
LED R20																	
R20 	Med	7	38268	LED7DR20/827	120	6	3.64	470		2700	80		25,000	▲		Damp	White
		7	43233	LED7DR20/830	120	6	3.64	470		3000	80		25,000	▲		Damp	White
		7	38273	LED7DR20/850	120	6	3.64	500		5000	80		25,000	▲		Damp	White

* The life rating is based on the hours of operation the lamp will provide before reaching 70% of its original lumen rating (L70).
** Minimum order quantity = 6
† Incandescent or halogen wattage equivalencies based on Energy Star guidelines using lumens or CBPB according to lamp type
†† Energy Star status: Certified as meeting Energy Star guidelines.
‡ UL 1993 Environmental Requirements for LED Lamps.
Location, damp – Exterior or interior location that is normally or periodically subject to condensation of moisture in, on, or adjacent to electrical equipment, and includes partially protected locations.
Location, dry – Location not normally subject to dampness, may include a location subject to temporary dampness, i.e., building under construction, provided ventilation is adequate to prevent an accumulation of moisture.
Location, wet – Location in which water or other liquid can drip, splash, or flow on or against electrical equipment.
Notes: Product descriptions ending in "/TP" indicate a carded blister or clamshell package nested in a tray for shelf display. Cards also designed for hook display.

For the most up-to-date product information, see www.gelighting.com. To convert inches to millimeters, multiply by 25.4.

Bulb Shape	Base Type	Watts	Order Code	Description	Volts	Case Qty	MOL (in)	Lumens Initial	CBCP	Initial Color Temp	CRI	†Wattage Equivalency	*Rated Life – Hours L70	Dimmable	††ENERGY STAR®	‡Location Rating	Additional Information
LED Reflector Lamps (continued)																	
LED BR30 (The 12W BR30s are 65-watt incandescent replacements – based on ENERGY STAR® requirements for lumens)																	
BR30	Med	10	68160	LED10DR303V/827W	120	6	5.37	700		2700	80	65W	25,000	▲	★	Damp	Frosted, White body
		10	68161	LED10DR303V/830W	120	6	5.37	700		3000	80	65W	25,000	▲	★	Damp	Frosted, White body
		10	43234	LED10DR30V/827W	120	3	5.37	650		2700	80	65W	25,000	▲		Damp	Frosted, White body
		10	43237	LED10DR30V/830W	120	3	5.37	650		3000	80	65W	25,000	▲		Damp	Frosted, White body
		10	43241	LED10DR30V/850W	120	3	5.37	650		5000	80	65W	25,000	▲		Damp	Frosted, White body
		10	69107	LED10DR303/850W	120	6	5.37	700		5000	80	65W	25,000	▲	★	Damp	Frosted, White body
LED BR40																	
BR40	Med	13	20445	LED13BR40/5K/TP	120	3	6.34	1070		5000	80	85W	25,000	▲	★	Damp	Frosted, White body
		13	64176	LED13DBR40/827	120	6	6.34	1070		2700	80	85W	25,000	▲	★	Damp	Frosted, White body
		13	14708	LED13DBR40/830	120	6	6.34	1070		3000	80	85W	25,000	▲	★	Damp	Frosted, White body
LED Directional Lamps (MR16)																	
LED 12 Volt AC/DC MR16 and MRX16 (35-watt Halogen replacements – based on ENERGY STAR® requirements for center beam candlepower)																	
MR16	GU5.3	7	69920	LED7DMR16D830/25	12	6	1.9	390	1900	3000	83	35W	25,000	▲		Damp	Narrow Flood, 25° beam, Silver
		7	93412	LED7DMR16S830/15	12	6	2.3	460	3800	3000	80	35W	25,000	▲		Damp	Spot, 15° beam, Silver
		7	93433	LED7DMR16S840/15	12	6	1.97	490	4200	4000	80	35W	25,000	▲		Damp	Accent, 15° beam, Silver
		7	89947	LED7XDMR16D/TP	12	6	1.88	500	2500	3000	82	50W	25,000	▲		Damp	Accent, 25° beam, Silver
MRX16	GU5.3	7	35529	LED7DMRX15827/15	12	6	2.2	400	3400	2700	80	35W	25,000	▲		Damp	Spot, 15° beam, White
		7	35206	LED7XDMRX1682725	12	6	2.2	500	2350	2700	80	50W	25,000	▲	★	Damp	Narrow Flood, 25° beam, White
		7	35214	LED7XDMRX1682735	12	6	2.2	500	1350	2700	80	50W	25,000	▲	★	Damp	Flood, 35° beam, White
		7	35196	LED7XDMRX1683025	12	6	2.2	500	1350	3000	80	50W	25,000	▲	★	Damp	Flood, 35° beam, White
		7	35195	LED7XDMRX1683025	12	6	2.2	500	2350	3000	80	50W	25,000	▲	★	Damp	Narrow Flood, 25° beam, White
		7	21359	LED7MRX16R930/10	12	6	2.01	350	8000	3000	95	50W	25,000			Damp	Spot, 10° beam, Reveal
MR16	GU5.3	5.5	35540	LED5.5DMR1682735	12	6	1.88	400	1000	2700	80	35W	25,000	▲	★	Damp	Flood, 35° beam, White
		5.5	35535	LED5.5DMR1683035	12	6	1.88	420	1000	3000	80	35W	25,000	▲	★	Damp	Flood, 35° beam, White
		5.5	35542	LED5.5DMR1684035	12	6	1.8	460	1100	4000	80	35W	25,000	▲	★	Damp	Flood, 35° beam, White
		7	35543	LED7XDMR16-28325	12	6	1.8	500	2350	3000	80	50W	25,000	▲	★	Damp	Narrow Flood, 25° beam, White
		7	35544	LED7XDMR16-28335	12	6	1.8	500	1350	3000	80	50W	25,000	▲	★	Damp	Flood 35° beam, White
		7	39542	LED7XDMR16-V2725	12	6	1.88	530	2400	2700	80	50W	25,000	▲		Damp	Narrow Flood, 25° beam, White
		7	39567	LED7XDMR16-V2735	12	6	1.88	530	1400	2700	80	50W	25,000	▲		Damp	Flood, 35° beam, White
LED 120 Volt GU10																	
MR16	GU10	1	73153	LED1GU10/NFL/CD	120	3	2.30	35	100	5500	70		12,000			Damp	Deco Light
		3.5	37114	LED4D/GU1083035	120	6	2.1	250	550	3000	80	35W	25,000	▲	★	Dry	Flood, 35° beam, White
		4	75865	LED4GU10/NFL/TP	120	3	2.30	100	250	3050	82		15,000			Damp	Accent, 25° beam, Silver
		4	89020	LED4D/GU10/NFLTP	120	3	2.1	250	720	3000	80	35W	25,000	▲	★	Damp	Flood, 35° beam, White
		4.5	62909	LED5GU10/NFL/TP	120	3	2.30	200	800	3000	82	35W	25,000			Damp	Accent, 25° beam, Silver
		6	26346	LED6D/GU10/NFL/TP	120	3	2.1	380	1100	3000	80	50W	25,000	▲	★	Damp	Flood, 35° beam, White
LED Directional Lamps (PAR)																	
LED Compact PAR16																	
PAR16	Med	4	26383	LED4D/P16/NFLTP	120	3	2.8	250	720	3000	80	40W	25,000	▲	★	Dry	Flood, 35° beam, White
		6	26384	LED6D/P16/NFLTP	120	3	2.8	380	1100	3000	80	60W	25,000	▲	★	Dry	Flood, 35° beam, White
LED Compact PAR20 (50-watt halogen replacements – based on ENERGY STAR® requirements for center beam candlepower)																	
PAR20	Med	7	92163	LED7DO202NFL-OD	120	3	3.5	500	3600	2700	80	50W	25,000	▲		Wet	Accent, 20° beam, White, in/outdoor
		7	21282	LED7DP202NFL5KOD	120	3	3.5	550	3600	5000	80	50W	25,000	▲		Wet	Accent, 20° beam, White, in/outdoor
		7	93327	LED7DP203B830/20	120	6	3.5	520	3600	3000	80	50W	25,000	▲	★	Damp	Narrow Flood, 20° beam Black
		7	92121	LED7DP203NFL5KTP	120	3	3.5	550	4000	5000	80	70W	25,000	▲	★	Damp	Accent, 20° beam, White
		7	74374	LED7DP203W/NFLTP	120	3	3.5	500	3600	2700	80	70W	25,000	▲	★	Damp	Accent, 20° beam, White
		7	93347	LED7DP203W830/20	120	6	3.5	520	3600	3000	80	50W	25,000	▲	★	Damp	Narrow Flood, 20° beam White

* The life rating is based on the hours of operation the lamp will provide before reaching 70% of its original lumen rating (L70).
** Minimum order quantity = 6
† Incandescent or halogen wattage equivalencies based on Energy Star guidelines using lumens or CBPB according to lamp type
†† Energy Star status: Certified as meeting Energy Star guidelines.
‡ UL 1993 Environmental Requirements for LED Lamps.
Location, damp – Exterior or interior location that is normally or periodically subject to condensation of moisture in, on, or adjacent to electrical equipment, and includes partially protected locations.
Location, dry – Location not normally subject to dampness, may include a location subject to temporary dampness, i.e., building under construction, provided ventilation is adequate to prevent an accumulation of moisture.
Location, wet – Location in which water or other liquid can drip, splash, or flow on or against electrical equipment.
Note: Product descriptions ending in "/TP" indicate a carded blister or clamshell package nested in a tray for shelf display. Cards also designed for hook display.

LED Lamps, Tubes and Modules

Bulb Shape	Base Type	Watts	Order Code	Description	Volts	Case Qty	MOL (in)	Lumens Initial	CBCP	Initial Color Temp	CRI	†Wattage Equivalency	*Rated Life – Hours L70	Dimmable	††ENERGY STAR®	‡Location Rating	Additional Information
LED Directional Lamps (PAR) (continued)																	
LED Compact PAR20 (continued) (50-watt halogen replacements – based on ENERGY STAR® requirements for center beam candlepower)																	
PAR20	Med	7	93348	LED7DP203W830/35	120	6	3.5	520	1200	3000	80	50W	25,000	▲	★	Damp	Flood, 35° beam White
		7	93349	LED7DP203B827/20	120	6	3.5	500	3600	2700	80	50W	25,000	▲	★	Damp	Narrow Flood, 20° beam Black
		7	93354	LED7DP203B827/35	120	6	3.5	500	1150	2700	80	50W	25,000	▲	★	Damp	Flood, 35° beam Black
		7	93360	LED7DP203W827/20	120	6	3.5	500	3600	2700	80	50W	25,000	▲	★	Damp	Narrow Flood, 20° beam White
		7	93362	LED7DP203W827/35	120	6	3.5	500	1150	2700	80	50W	25,000	▲	★	Damp	Flood, 35° beam White
LED Compact PAR30 – Low Glare – Visual Comfort Lens™ (Halogen replacement info below is based on ENERGY STAR® requirements for center beam candlepower)																	
PAR30	Med	12	84374	LED12DP30RW93015	120	6	3.74	860	9400	3000	90	75W	25,000	▲	★	Damp	Spot, 15° beam, White
		12	84379	LED12DP30RW93025	120	6	3.74	900	3900	3000	90	75W	25,000	▲	★	Damp	Narrow Flood, 25° beam, White
		12	84380	LED12DP30RW93040	120	6	3.74	900	1800	3000	90	75W	25,000	▲	★	Damp	Flood, 40° beam, White
		12	84392	LED12DP30RW92725	120	6	3.74	850	3500	2700	90	75W	25,000	▲	★	Damp	Narrow Flood, 25° beam, White
		12	84395	LED12DP30RW92740	120	6	3.74	850	1700	2700	90	75W	25,000	▲	★	Damp	Flood, 40° beam, White
		12	84384	LED12DP30RW83025	120	6	3.74	1050	4800	3000	80	75W	25,000	▲	★	Damp	Narrow Flood, 25° beam, White
		12	42131	LED12DP30RW83040	120	6	3.74	1050	2400	3000	80	75W	25,000	▲	★	Damp	Flood, 40° beam, White
		12	42133	LED12DP30RW82725	120	6	3.74	1000	4700	2700	80	75W	25,000	▲	★	Damp	Narrow Flood, 25° beam, White
		12	42134	LED12DP30RW82740	120	6	3.74	1000	2200	2700	80	75W	25,000	▲	★	Damp	Flood, 40° beam, White
		12	73583	LED12DP30RB82740	120	6	3.74	1000	2200	2700	80	75W	25,000	▲	★	Damp	Flood, 40° beam, Black
LED Compact PAR30 – Long Neck - Low Glare – Visual Comfort Lens™ (Halogen replacement info below is based on ENERGY STAR® requirements for center beam candlepower)																	
PAR30L	Med	12	84399	LED12DP3LRW93025	120	6	4.72	900	3900	3000	90	75W	25,000	▲	★	Damp	Narrow Flood, 25° beam, White
		12	84400	LED12DP3LRW93040	120	6	4.72	900	1800	3000	90	75W	25,000	▲	★	Damp	Flood, 40° beam, White
		12	84407	LED12DP3LRW92740	120	6	4.72	850	1700	2700	90	75W	25,000	▲	★	Damp	Flood, 40° beam, White
		12	42136	LED12DP3LRW83025	120	6	4.72	1050	4800	3000	80	75W	25,000	▲	★	Damp	Narrow Flood, 25° beam, White
		12	42137	LED12DP3LRW83040	120	6	4.72	1050	2400	3000	80	75W	25,000	▲	★	Damp	Flood, 40° beam, White
		12	42141	LED12DP3LRW82725	120	6	4.72	1000	4700	2700	80	75W	25,000	▲	★	Damp	Narrow Flood, 25° beam, White
		12	42144	LED12DP3LRW82740	120	6	4.72	1000	2200	2700	80	75W	25,000	▲	★	Damp	Flood, 40° beam, White
		17	20151	LED17DP30LW93025	120	6	4.8	1100	4600	3000	90	75W	25,000	▲	★	Damp	Spot, 25° beam, White
LED Compact PAR30 (Halogen replacement info below is based on ENERGY STAR® requirements for center beam candlepower)																	
PAR30	Med	12	89988	LED12DP302/FL/TP	120	3	3.66	850	2300	2700	84	75W	25,000	▲		Damp	Accent, 35° beam, White
		12	98755	LED12DP303W83035	120	6	3.66	950	2600	3000	80	75W	25,000	▲	★	Damp	Flood, 35° beam, White, STIR
LED Compact PAR30 Long Neck (Halogen replacement info below is based on ENERGY STAR® requirements for center beam candlepower)																	
PAR30L	Med	12	89989	LED12DP3L2/FL/TP	120	3	4.61	850	2300	2700	84	75W	25,000	▲		Damp	Accent, 35° beam, White
		12	22233	LED12DP3L2FL5KTP	120	3	4.61	1050	3000	5000	84	75W	25,000	▲		Damp	Accent, 35° beam, White
		12	98811	LED12DP3L3W83035	120	6	4.61	950	2600	3000	80	75W	25,000	▲	★	Damp	Flood, 35° beam, White, STIR
LED PAR30 HO - Universal 120-277V																	
		18	75089	LED18P30LW83015	120-277	6	4.6	1800	15500	3000	80	75W	25,000			Damp	Spot, 15° beam, White
		18	75091	LED18P30LW83025	120-277	6	4.6	1800	7000	3000	80	75W	25,000			Damp	Narrow Flood, 25° beam, White
		18	75065	LED18P30LW93015	120-277	6	4.6	1400	12500	3000	90	75W	25,000			Damp	Spot, 15° beam, MTO, 1000 Min. Qty, 12 Week Lead Time, White
		18	75078	LED18P30LW93025	120-277	6	4.6	1400	5000	3000	90	75W	25,000			Damp	Narrow Flood, 25° beam, White
LED PAR38 STIR																	
PAR38		15	32213	LED15DP38W830/40	120	6	5.04	1300	2300	3000	81	90W	25,000	▲	★	Wet	Flood, 40° beam, STIR

* The life rating is based on the hours of operation the lamp will provide before reaching 70% of its original lumen rating (L70).
** Minimum order quantity = 6
† Incandescent or halogen wattage equivalencies based on Energy Star guidelines using lumens or CBPB according to lamp type
†† Energy Star status: Certified as meeting Energy Star guidelines.
‡ UL 1993 Environmental Requirements for LED Lamps.
Location, damp – Exterior or interior location that is normally or periodically subject to condensation of moisture in, on, or adjacent to electrical equipment, and includes partially protected locations.
Location, dry – Location not normally subject to dampness, may include a location subject to temporary dampness, i.e., building under construction, provided ventilation is adequate to prevent an accumulation of moisture.
Location, wet – Location in which water or other liquid can drip, splash, or flow on or against electrical equipment.
Note: Product descriptions ending in "/TP" indicate a carded blister or clamshell package nested in a tray for shelf display. Cards also designed for hook display.

LED Directional Lamps (PAR) (continued)

Bulb Shape	Base Type	Watts	Order Code	Description	Volts	Case Qty	MOL (in)	Lumens Initial	CBCP	Initial Color Temp	CRI	†Wattage Equivalency	*Rated Life – Hours L70	Dimmable	††ENERGY STAR®	‡Location Rating	Additional Information
LED PAR38 – Low Glare – Visual Comfort Lens™ (90-watt halogen replacements – based on ENERGY STAR® requirements for center beam candlepower)																	
PAR38 	Med	12	63323	LED12DP38W827/25	120	6	5.32	960	4600	2700	80	90W	25,000	▲		Dry	Narrow Flood, 25° beam, White
		12	63334	LED12DP38W927/25	120	6	5.32	820	3900	2700	91	90W	25,000	▲		Dry	Narrow Flood, 25° beam, White
		12	92971	LED12D38W3827/40	120	6	5.31	1050	2300	2700	81	100W	25,000	▲	★	Damp	Flood, 40° beam, White
		12	92972	LED12D38W3830/25	120	6	5.31	1050	5500	3000	81	100W	25,000	▲	★	Damp	Narrow Flood, 25° beam, White
		12	92973	LED12D38WO383040	120	6	5.31	1050	2300	3000	80	100W	25,000	▲	★	Wet	Flood, 40° beam, White
		18	94909	LED18D38W830/15	120	6	5.31	1400	8700	3000	80	85W	25,000	▲		Dry	Spot, 15° beam, White
		18	92923	LED18D38W3927/25	120	6	5.31	1250	4900	2700	92	100W	25,000	▲	★	Damp	Narrow Flood, 25° beam, White
		18	92927	LED18D38W3930/15	120	6	5.32	1350	15,000	3000	92	75W	25,000	▲	★	Damp	Spot, 15° beam, White
		18	92933	LED18D38W3930/25	120	6	5.31	1350	5200	3000	92	100W	25,000	▲	★	Damp	Narrow Flood, 25° beam, White
		18	92934	LED18D38W3930/40	120	6	5.12	1350	3200	3000	92	120W	25,000	▲	★	Damp	Flood, 40° beam, White
		18	92950	LED18D38OW382725	120	6	5.12	1550	5800	2700	81	120W	25,000	▲	★	Wet	Narrow Flood, 25° beam, White
		18	92958	LED18D38OW382740	120	6	5.12	1550	3800	2700	81	120W	25,000	▲	★	Wet	Flood, 40° beam, White
		18	92963	LED18D38OW383025	120	6	5.12	1550	6000	3000	81	120W	25,000	▲	★	Wet	Narrow Flood, 25° beam, White
		18	92967	LED18D38OW383040	120	6	5.12	1550	4000	3000	81	150W	25,000	▲	★	Wet	Flood, 40° beam, White
		18	85085	LED18D38OW383525	120	6	5.31	1700	6500	3500	81	120W	25,000	▲	★	Wet	Narrow Flood, 25° beam, White
		18	87917	LED18D38OW383540	120	6	5.31	1700	4400	3500	81	150W	25,000	▲	★	Wet	Flood, 40° beam, White
		18	92961	LED18D38W3830/15	120	6	5.12	1750	20,000	3000	81	150W	25,000	▲	★	Damp	Spot, 15° beam, White
		18	92926	LED18D38W3927/40	120	6	5.12	1250	2900	2700	92	120W	25,000	▲	★	Damp	Flood, 40° beam, White
		18	93171	LED18D38OW384025	120	6	5.31	1700	6500	4000	81	120W	25,000	▲	★	Wet	Narrow Flood, 25° beam, White
		18	93172	LED18D38OW384040	120	6	5.31	1700	4400	4000	81	150W	25,000	▲	★	Wet	Flood, 40° beam, White
		18	65730	LED18D38OW385025	120	6	5.31	1700	6500	5000	81	120W	25,000	▲	★	Wet	Narrow Flood, 25° beam, White
		18	65731	LED18D38OW385040	120	6	5.31	1700	4400	5000	81	150W	25,000	▲	★	Wet	Flood, 40° beam, White
LED reveal® Whiter White Technology																	
PAR38		18	31300	LED18D38WW930/15	120	6	5.31	1170	10000	3000	91	100W	25,000	▲	★	Damp	Spot, 15° beam, MTO, 1000 Min. Qty, 12 Week Lead Time, White
		18	31301	LED18D38WW930/25	120	6	5.31	1170	4500	3000	91	100W	25,000	▲	★	Damp	Narrow Flood, 25° beam, White
LED Commercial PAR38 (Indoor/Outdoor) (Halogen replacement info below is based on ENERGY STAR® requirements for center beam candlepower)																	
PAR38 	Med	12	90132	LED12DP382W82725	120	6	5.12	850	4000	2700	84	85W	25,000	▲		Wet	Narrow Flood, 25° beam, White
		12	89990	LED12DP382WFL/TP	120	3	5.12	950	2700	3000	84	85W	25,000	▲		Wet	Flood, 35° beam, White
		18	89992	LED18DP38W/FL/TP	120	6	5.12	1300	2400	3000	84	100W	25,000	▲		Wet	Flood, 40° beam, White
		26	68183	LED26DP38S830/12	120	6	5.31	1500	24000	3000	82	130W	25,000	▲		Wet	Spot, 12° beam, Silver, 130-w Repl.
		26	68184	LED26DP38S830/25	120	6	5.31	1500	6800	3000	82	130W	25,000	▲		Wet	Narrow Flood, 25° beam, Silver, 130-w Repl.
		26	68185	LED26DP38S830/40	120	6	5.31	1500	3100	3000	82	120W	25,000	▲		Wet	Flood, 40° beam, Silver, 120-w Repl.
		26	68182	LED26DP38S840/40	120	6	5.31	1650	3200	4000	82	120W	25,000	▲		Wet	Flood, 40° beam, Silver, 120-w Repl.
		26	68181	LED26DP38S-FL/TP	120	6	5.31	1650	3200	4000	82	120W	25,000	▲		Wet	Flood, 40° beam, Silver, 120-w Repl.
		26	33647	LED26DP38S835/12	120	6	5.31	1900	31,000	3500	82	160W	25,000	▲	★	Wet	Spot, 12° beam, Silver
		26	70591	LED26DP38S835/40	120	6	5.31	1900	4,000	3500	82	160W	25,000	▲	★	Wet	Flood, 40° beam, Silver
		28	15139	LED28P38S830/15	120	6	5.31	2500	20,000	3000	81	150W	25,000		★	Damp	Spot, 15° beam, Silver, Non-Dimming
		28	25844	LED28P38S830/25	120	6	5.31	2400	11,000	3000	81	150W	25,000		★	Damp	Narrow Flood, 25° beam, Silver, Non-Dimming
		28	25953	LED28P38S830/40	120	6	5.31	2400	5,600	3000	81	150W	25,000		★	Damp	Flood, 40° beam, Silver, Non-Dimming

* The life rating is based on the hours of operation the lamp will provide before reaching 70% of its original lumen rating (L70).
** Minimum order quantity = 6
† Incandescent or halogen wattage equivalencies based on Energy Star guidelines using lumens or CBPB according to lamp type
†† Energy Star status: Certified as meeting Energy Star guidelines.
‡ UL 1993 Environmental Requirements for LED Lamps.
Location, damp – Exterior or interior location that is normally or periodically subject to condensation of moisture in, on, or adjacent to electrical equipment, and includes partially protected locations.
Location, dry – Location not normally subject to dampness, may include a location subject to temporary dampness, i.e., building under construction, provided ventilation is adequate to prevent an accumulation of moisture.
Location, wet – Location in which water or other liquid can drip, splash, or flow on or against electrical equipment.
Note: Product descriptions ending in "/TP" indicate a carded blister or clamshell package nested in a tray for shelf display. Cards also designed for hook display.

LED Lamps, Tubes and Modules

Bulb Shape	Base Type	Watts	Order Code	Description	Volts	Case Qty	MOL (in)	Lumens Initial	CBCP	Initial Color Temp	CRI	†Wattage Equivalency	*Rated Life – Hours L70	Dimmable	††ENERGY STAR®	‡Location Rating	Additional Information
LED HID – 400 Watt Metal Halide Replacement Lamp																	
ED37	EX39	60	43263	LED60/2M175/740		3	8.4	8,800	-	4000	70	175W	50,000			Damp	Open or Enclosed Rated, CWA ANSI-M57, M137, M152
		60	88107	LED60/2M175/750		3	8.4	8,800	-	5000	70	175W	50,000			Damp	Open or Enclosed Rated, CWA ANSI-M57, M137, M152
		80	43258	LED80/2M250/740		3	8.4	11,800	-	4000	70	250W	50,000			Damp	Open or Enclosed Rated, CWA ANSI-M58, M138, M153
		80	88099	LED80/2M250/750		3	8.4	11,800	-	5000	70	250W	50,000			Damp	Open or Enclosed Rated, CWA ANSI-M58, M138, M153
		165	21259	LED165/M400/740		3	11.42	20,000	-	4000	73	400W	50,000			Dry	Open Rated, ANSI - M59, M135, M155
LED Plug-in																	
Vertical 	G24q/ GX24	12	96801	LED12G24Q-V/827	#	6	5.31	950	-	2700	80		50,000			Damp	Requires Electronic Ballast, White
		12	96775	LED12G24Q-V/830	#	6	5.31	950	-	3000	80		50,000			Damp	Requires Electronic Ballast, White
		12	96689	LED12G24Q-V/835	#	6	5.31	1000	-	3500	80		50,000			Damp	Requires Electronic Ballast, White
		12	96771	LED12G24Q-V/840	#	6	5.31	1000	-	4000	80		50,000			Damp	Requires Electronic Ballast, White
	GX24q	18.5	39288	LED19GX24q-V/827	#	6	6.42	1800	-	2700	80		50,000			Damp	Requires Electronic Ballast, White
		18.5	39277	LED19GX24q-V/830	#	6	6.42	1850	-	3000	80		50,000			Damp	Requires Electronic Ballast, White
		18.5	39275	LED19GX24q-V/835	#	6	6.42	1950	-	3500	80		50,000			Damp	Requires Electronic Ballast, White
		18.5	39279	LED19GX24q-V/840	#	6	6.42	1950	-	4000	80		50,000			Damp	Requires Electronic Ballast, White
Horizontal 	G24q/ GX24	12	96799	LED12G24Q-H/827	#	6	5.31	950	-	2700	80		50,000			Damp	Requires Electronic Ballast, White
		12	96798	LED12G24Q-H/830	#	6	5.31	950	-	3000	80		50,000			Damp	Requires Electronic Ballast, White
		12	96761	LED12G24Q-H/835	#	6	5.31	1000	-	3500	80		50,000			Damp	Requires Electronic Ballast, White
		12	96769	LED12G24Q-H/840	#	6	5.31	1000	-	4000	80		50,000			Damp	Requires Electronic Ballast, White
	GX24q	18.5	39289	LED19GX24q-H/827	#	6	6.7	1800	-	2700	80		50,000			Damp	Requires Electronic Ballast, White
		18.5	39282	LED19GX24q-H/830	#	6	6.7	1850	-	3000	80		50,000			Damp	Requires Electronic Ballast, White
		18.5	39276	LED19GX24q-H/835	#	6	6.7	1950	-	3500	80		50,000			Damp	Requires Electronic Ballast, White
		18.5	39283	LED19GX24q-H/840	#	6	6.7	1950	-	4000	80		50,000			Damp	Requires Electronic Ballast, White
High Lumen Biax																	
HLBX	2G11	17	39073	LED172G11/830/10	#	10	22.3	2150	-	3000	80		40,000			Damp	Requires Electronic Ballast, White
		17	39074	LED172G11/835/10	#	10	22.3	2150	-	3500	80		40,000			Damp	Requires Electronic Ballast, White
		17	39075	LED172G11/840/10	#	10	22.3	2200	-	4000	80		40,000			Damp	Requires Electronic Ballast, White
		17	39076	LED172G11/850/10	#	10	22.3	2200	-	5000	80		40,000			Damp	Requires Electronic Ballast, White, MTO
RS Can																	
	E26	10	95853	LED10RS4/827E26P	120	12	5.88	700		2700	80	65W	50,000	▲	★	Damp	4" Can, Pigtail Attachment
		10	95854	LED10RS4/830E26P	120	12	5.88	700		3000	80	65W	50,000	▲	★	Damp	4" Can, Pigtail Attachment
		10	35365	LED10RS4/840E26P	102	12	7.5	700		4000	80	65W	50,000	▲	★	Damp	4" Can, Pigtail Attachment
	GU24	10	95855	LED10RS4/827GUP	120	12	5.88	700		2700	80	65W	50,000	▲	★	Damp	4" Can, Pigtail Attachment
		10	95856	LED10RS4/830GUP	120	12	5.88	700		3000	80	65W	50,000	▲	★	Damp	4" Can, Pigtail Attachment

Check ballast compatibility at GELighting.com/LED4pin-compatibility.
* The life rating is based on the hours of operation the lamp will provide before reaching 70% of its original lumen rating (L70).
** Minimum order quantity = 6
† Incandescent or halogen wattage equivalencies based on Energy Star guidelines using lumens or CBPB according to lamp type
†† Energy Star status: Certified as meeting Energy Star guidelines.
‡ UL 1993 Environmental Requirements for LED Lamps.
Location, damp – Exterior or interior location that is normally or periodically subject to condensation of moisture in, on, or adjacent to electrical equipment, and includes partially protected locations.
Location, dry – Location not normally subject to dampness, may include a location subject to temporary dampness, i.e., building under construction, provided ventilation is adequate to prevent an accumulation of moisture.
Location, wet – Location in which water or other liquid can drip, splash, or flow on or against electrical equipment.
Note: Product descriptions ending in "/TP" indicate a carded blister or clamshell package nested in a tray for shelf display. Cards also designed for hook display.

For the most up-to-date product information, see www.gelighting.com. To convert inches to millimeters, multiply by 25.4.

Bulb Shape	Base Type	Watts	Order Code	Description	Volts	Case Qty	MOL (in)	Lumens Initial	CBCP	Initial Color Temp	CRI	†Wattage Equivalency	*Rated Life – Hours L70	Dimmable	††ENERGY STAR®	‡Location Rating	Additional Information
RS Can (continued)																	
	E26	10	85153	LED10RS6/827E26P	120	12	7.5	700		2700	80	65W	50,000	▲	★	Damp	6" Can, Pigtail Attachment
		10	85160	LED10RS6/830E26P	120	12	7.5	700		3000	80	65W	50,000	▲	★	Damp	6" Can, Pigtail Attachment
		10	30367	LED10RS6/840E26P	120	12	7.5	700		4000	80	65W	50,000	▲	★	Damp	6" Can, Pigtail Attachment
	GU24	10	95851	LED10RS6/827GUP	120	12	7.5	700		2700	80	65W	50,000	▲	★	Damp	6" Can, Pigtail Attachment
		10	95852	LED10RS6/830GUP	120	12	7.5	700		3000	80	65W	50,000	▲	★	Damp	6" Can, Pigtail Attachment
	E26	13	70120	LED13RS6/827E26P	120	12	7.5	1000		2700	80	90W	50,000	▲	★	Damp	6" Can, Pigtail Attachment
		13	70122	LED13RS6/830E26P	120	12	7.5	1000		3000	80	90W	50,000	▲	★	Damp	6" Can, Pigtail Attachment
	GU24	13	70124	LED13RS6/827GUP	120	12	7.5	1000		2700	80	90W	50,000	▲	★	Damp	6" Can, Pigtail Attachment
		13	70127	LED13RS6/830GUP	120	12	7.5	1000		3000	80	90W	50,000	▲	★	Damp	6" Can, Pigtail Attachment

Bulb	Watts	Order Code	Description	Base	Qty	MOL (in.)	Initial Lumens	Initial Color Temp	CRI	Life (L70)	DLC	UL	‡Location Rating	Additional Information
LED Tubes														
Integrated 4 ft LED Plastic Tubes (Operates on Instant Start or Program Start Ballast)														
T8	18	31550	LED18ET8/4/830	G13	25	48	2150	3500K	80+	50K	Yes	Yes	Damp	Instant or PRS Ballastt
	18	93133	LED18ET8/4/835	G13	25	48	2250	3500K	80+	50K	Yes	Yes	Damp	Instant or PRS Ballast
	18	93135	LED18ET8/4/840	G13	25	48	2250	4000K	80+	50K	Yes	Yes	Damp	Instant or PRS Ballast
	18	93140	LED18ET8/4/850	G13	25	48	2350	5000K	80+	50K	Yes	Yes	Damp	Instant or PRS Ballast
	15	62399	LED15ET8/4/830	G13	25	48	1850	3000K	80+	50K	Yes	Yes	Damp	Instant or PRS Ballast
	15	62401	LED15ET8/4/835	G13	25	48	1950	3500K	80+	50K	Yes	Yes	Damp	Instant or PRS Ballast
	15	62402	LED15ET8/4/840	G13	25	48	1950	4000K	80+	50K	Yes	Yes	Damp	Instant or PRS Ballast
	15	62409	LED15ET8/4/850	G13	25	48	2050	5000K	80+	50K	Yes	Yes	Damp	Instant or PRS Ballast
	15	62410	LED15ET8/4/865	G13	25	48	1950	6500K	80+	50K	-	Yes	Damp	Instant or PRS Ballast
	12	61218	LED12ET8/4/830	G13	25	48	1550	3000K	80+	50K	Yes	Yes	Damp	Instant or PRS Ballast
	12	61223	LED12ET8/4/835	G13	25	48	1600	3500K	80+	50K	Yes	Yes	Damp	Instant or PRS Ballast
	12	61271	LED12ET8/4/840	G13	25	48	1600	4000K	80+	50K	Yes	Yes	Damp	Instant or PRS Ballast
	12	61327	LED12ET8/4/850	G13	25	48	1700	5000K	80+	50K	Yes	Yes	Damp	Instant or PRS Ballast
	12	61329	LED12ET8/4/865	G13	25	48	1600	6500K	80+	50K	-	Yes	Damp	Instant or PRS Ballast
Integrated 3 ft LED Plastic Tubes (Operates on Instant Start or Program Start Ballast)														
T8	12	31554	LED12ET8/3/830	G13	25	36	1350	3500K	80+	50K	-	Yes	Damp	Instant or PRS Ballast
	12	26544	LED12ET8/3/835	G13	25	36	1400	3500K	80+	50K	-	Yes	Damp	Instant or PRS Ballast
	12	26625	LED12ET8/3/840	G13	25	36	1400	4000K	80+	50K	-	Yes	Damp	Instant or PRS Ballast
	12	26627	LED12ET8/3/850	G13	25	36	1500	5000K	80+	50K	-	Yes	Damp	Instant or PRS Ballast
Integrated 2 ft LED Plastic Tubes (Operates on Instant Start or Program Start Ballast)														
T8	9	31557	LED9ET8/2/830	G13	25	24	1100	3500K	80+	50K	Yes	Yes	Damp	Instant or PRS Ballast
	9	26635	LED9ET8/2/835	G13	25	24	1100	3500K	80+	50K	Yes	Yes	Damp	Instant or PRS Ballast
	9	26648	LED9ET8/2/840	G13	25	24	1100	4000K	80+	50K	Yes	Yes	Damp	Instant or PRS Ballast
	9	26676	LED9ET8/2/850	G13	25	24	1100	5000K	80+	50K	Yes	Yes	Damp	Instant or PRS Ballast
Integrated U6 LED Plastic Tubes (Operates on Instant Start or Program Start Ballast)														
T8	13	43120	LED13ET8/U6/830	G13	12	22.5	1800	3000K	80+	50K	-	Yes	Damp	Instant or PRS Ballast
	13	43125	LED13ET8/U6/835	G13	12	22.5	1850	3500K	80+	50K	-	Yes	Damp	Instant or PRS Ballast
	13	43129	LED13ET8/U6/840	G13	12	22.5	1900	4000K	80+	50K	-	Yes	Damp	Instant or PRS Ballast
	13	43130	LED13ET8/U6/850	G13	12	22.5	1900	5000K	80+	50K	-	Yes	Damp	Instant or PRS Ballast
Integrated 4 ft LED Glass Tubes (Type A)														
T8	18	35767	LED18ET8/G/4/830	G13	20	48	2200	3000K	80+	50K	Yes	Yes	Damp	Instant or PRS Ballast
	18	35768	LED18ET8/G/4/835	G13	20	48	2300	3500K	80+	50K	Yes	Yes	Damp	Instant or PRS Ballast
	18	35769	LED18ET8/G/4/840	G13	20	48	2300	4000K	80+	50K	Yes	Yes	Damp	Instant or PRS Ballast
	18	35772	LED18ET8/G/4/850	G13	20	48	2400	5000K	80+	50K	Yes	Yes	Damp	Instant or PRS Ballast
	18	35773	LED18ET8/G/4/865	G13	20	48	2300	6500K	80+	50K	-	Yes	Damp	Instant or PRS Ballast
	15	35790	LED15ET8/G/4/830	G13	20	48	2000	3000K	80+	50K	Yes	Yes	Damp	Instant or PRS Ballast
	15	35791	LED15ET8/G/4/835	G13	20	48	2000	3500K	80+	50K	Yes	Yes	Damp	Instant or PRS Ballast
	15	35793	LED15ET8/G/4/840	G13	20	48	2000	4000K	80+	50K	Yes	Yes	Damp	Instant or PRS Ballast
	15	35797	LED15ET8/G/4/850	G13	20	48	2100	5000K	80+	50K	Yes	Yes	Damp	Instant or PRS Ballast

Check ballast compatibility at GELighting.com/LED4pin-compatibility.
* The life rating is based on the hours of operation the lamp will provide before reaching 70% of its original lumen rating (L70).
** Minimum order quantity = 6
† Incandescent or halogen wattage equivalencies based on Energy Star guidelines using lumens or CBPB according to lamp type
†† Energy Star status: Certified as meeting Energy Star guidelines.
‡ UL 1993 Environmental Requirements for LED Lamps.
Location, damp – Exterior or interior location that is normally or periodically subject to condensation of moisture in, on, or adjacent to electrical equipment, and includes partially protected locations.
Location, dry – Location not normally subject to dampness, may include a location subject to temporary dampness, i.e., building under construction, provided ventilation is adequate to prevent an accumulation of moisture.
Location, wet – Location in which water or other liquid can drip, splash, or flow on or against electrical equipment.
Note: Product descriptions ending in "/TP" indicate a carded blister or clamshell package nested in a tray for shelf display. Cards also designed for hook display.

Bulb	Watts	Order Code	Description	Base	Qty	MOL (in.)	Initial Lumens	Initial Color Temp	CRI	Life (L70)	DLC	UL	‡Location Rating	Additional Information
LED Tubes (continued)														
Integrated 4 ft LED Glass Tubes (Type A) (continued)														
T8	15	35798	LED15ET8/G/4/865	G13	20	48	2000	6500K	80+	50K	-	Yes	Damp	Instant or PRS Ballast
	15	43284	LED12ET8/G/4/830	G13	20	48	1600	3000K	80+	50K	Yes	Yes	Damp	Instant or PRS Ballast
	15	43288	LED12ET8/G/4/835	G13	20	48	1650	3500K	80+	50K	Yes	Yes	Damp	Instant or PRS Ballast
	15	43291	LED12ET8/G/4/840	G13	20	48	1650	4000K	80+	50K	Yes	Yes	Damp	Instant or PRS Ballast
	15	43293	LED12ET8/G/4/850	G13	20	48	1750	5000K	80+	50K	Yes	Yes	Damp	Instant or PRS Ballast
Integrated 4 ft Value LED Glass Tubes (Type A)														
T8	15	35896	LED15ET8/835-V6P	G13	6	48	1750	3500K	80+	36K	No	Yes	Damp	Instant or PRS Ballast
	15	35900	LED15ET8/840-V6P	G13	6	48	1750	4000K	80+	36K	No	Yes	Damp	Instant or PRS Ballast
	15	35911	LED15ET8/850-V6P	G13	6	48	1800	5000K	80+	36K	No	Yes	Damp	Instant or PRS Ballast
	15	35913	LED15ET8/865-V6P	G13	6	48	1800	6500K	80+	36K	No	Yes	Damp	Instant or PRS Ballast
Integrated 3 ft LED Glass Tubes (Type A)														
T8	11	35783	LED11ET8/G/3/830	G13	20	36	1350	3000K	80+	50K	-	Yes	Damp	Instant or PRS Ballast
	11	35784	LED11ET8/G/3/835	G13	20	36	1400	3500K	80+	50K	-	Yes	Damp	Instant or PRS Ballast
	11	35788	LED11ET8/G/3/840	G13	20	36	1400	4000K	80+	50K	-	Yes	Damp	Instant or PRS Ballast
	11	35789	LED11ET8/G/3/850	G13	20	36	1500	5000K	80+	50K	-	Yes	Damp	Instant or PRS Ballast
Integrated 2 ft LED Glass Tubes (Type A)														
T8	8	35775	LED8ET8/G/2/830	G13	20	24	1100	3000K	80+	50K	Yes	Yes	Damp	Instant or PRS Ballast
	8	35776	LED8ET8/G/2/835	G13	20	24	1100	3500K	80+	50K	Yes	Yes	Damp	Instant or PRS Ballast
	8	35778	LED8ET8/G/2/840	G13	20	24	1100	4000K	80+	50K	Yes	Yes	Damp	Instant or PRS Ballast
	8	35779	LED8ET8/G/2/850	G13	20	24	1100	5000K	80+	50K	Yes	Yes	Damp	Instant or PRS Ballast
Remote 4 ft LED Plastic Tubes (Operates with Remote Driver)														
T8	18	94381	LED21T8/4/835	G13	10	48	2400	3500K	80+	50K	Yes	Yes	Damp	Requires Driver
	18	94382	LED21T8/4/840	G13	10	48	2500	4000K	80+	50K	Yes	Yes	Damp	Requires Driver
	18	94383	LED21T8/4/850	G13	10	48	2500	5000K	80+	50K	Yes	Yes	Damp	Requires Driver
	18	26059	LED21T8/4/865	G13	10	48	2400	6500K	80+	50K	-	Yes	Damp	Requires Driver
	13	38954	LED15T8/4/830	G13	10	48	1700	3000K	80+	50K	Yes	Yes	Damp	Requires Driver
	13	38957	LED15T8/4/835	G13	10	48	1800	3500K	80+	50K	Yes	Yes	Damp	Requires Driver
	13	38958	LED15T8/4/840	G13	10	48	1800	4000K	80+	50K	Yes	Yes	Damp	Requires Driver
	13	38962	LED15T8/4/850	G13	10	48	1800	5000K	80+	50K	Yes	Yes	Damp	Requires Driver
	13	38964	LED15T8/4/865	G13	10	48	1800	6500K	80+	50K	-	Yes	Damp	Requires Driver
Remote 3 ft LED Plastic Tubes (Operates with Remote Driver)														
T8	16	82343	LED18T8/3/835	G13	10	36	1800	3500K	80+	50K	-	Yes	Damp	Requires Driver
	16	82345	LED18T8/3/840	G13	10	36	1800	4000K	80+	50K	-	Yes	Damp	Requires Driver
	16	82346	LED18T8/3/850	G13	10	36	1800	5000K	80+	50K	-	Yes	Damp	Requires Driver
Remote 2 ft LED Plastic Tubes (Operates with Remote Driver)														
T8	8	65706	LED9T8/2/835	G13	20	24	1000	3500K	80+	50K	Yes	Yes	Damp	Requires Driver
	8	65707	LED9T8/2/840	G13	20	24	1100	4000K	80+	50K	Yes	Yes	Damp	Requires Driver
	8	65711	LED9T8/2/850	G13	20	24	1100	5000K	80+	50K	Yes	Yes	Damp	Requires Driver
	8	92997	LED9T8/2/865	G13	20	24	1000	6500K	80+	50K	-	Yes	Damp	Requires Driver
Remote LED Plastic U-Tubes (Operates with Remote Driver)														
T8	12	28084	LED14T8/U/835	G13	15	22.5	1700	3500K	80+	50K	-	Yes	Damp	Requires Driver
	12	28164	LED14T8/U/840	G13	15	22.5	1700	4000K	80+	50K	-	Yes	Damp	Requires Driver
Remote 8 ft LED Glass Tubes (Operates on Remote Driver)														
T8	30	62326	LED36T8/G/8/830	Fa8	20	96	4200	3000K	80+	50K	-	Yes	Damp	Requires Driver, Made in USA
	30	62327	LED36T8/G/8/835	Fa8	20	96	4400	3500K	80+	50K	-	Yes	Damp	Requires Driver, Made in USA
	30	62329	LED36T8/G/8/840	Fa8	20	96	4400	4000K	80+	50K	-	Yes	Damp	Requires Driver, Made in USA
	30	62349	LED36T8/G/8/850	Fa8	20	96	4500	5000K	80+	50K	-	Yes	Damp	Requires Driver, Made in USA
Remote 4 ft LED Glass Tubes (Operates on Remote Driver)														
T8	18	62428	LED21T8/G/4/835	G13	10	48	2400	3500K	80+	50K	Yes	Yes	Damp	Requires Driver
	18	62485	LED21T8/G/4/840	G13	10	48	2500	4000K	80+	50K	Yes	Yes	Damp	Requires Driver
	18	62487	LED21T8/G/4/850	G13	10	48	2500	5000K	80+	50K	Yes	Yes	Damp	Requires Driver
	18	62406	LED21T8/G4/835HL	G13	10	48	2750	3500K	80+	50K	Yes	Yes	Damp	Requires Driver
	18	62407	LED21T8/G4/840HL	G13	10	48	2800	4000K	80+	50K	Yes	Yes	Damp	Requires Driver
	18	62408	LED21T8/G4/850HL	G13	10	48	2800	5000K	80+	50K	Yes	Yes	Damp	Requires Driver
	18	91475	LED21T8/G4/830US	G13	10	48	2600	3000K	80+	50K	Yes	Yes	Damp	Requires Driver, Made in USA
	18	91496	LED21T8/G4/835US	G13	10	48	2600	3500K	80+	50K	Yes	Yes	Damp	Requires Driver, Made in USA
	18	91497	LED21T8/G4/840US	G13	10	48	2600	4000K	80+	50K	Yes	Yes	Damp	Requires Driver, Made in USA
	18	91498	LED21T8/G4/850US	G13	10	48	2600	5000K	80+	50K	Yes	Yes	Damp	Requires Driver, Made in USA
	13	38944	LED15T8/G/4/830	G13	10	48	1700	3000K	80+	50K	Yes	Yes	Damp	Requires Driver
	13	38945	LED15T8/G/4/835	G13	10	48	1750	3500K	80+	50K	Yes	Yes	Damp	Requires Driver

* The life rating is based on the hours of operation the lamp will provide before reaching 70% of its original lumen rating (L70).
** Minimum order quantity = 6
† Incandescent or halogen wattage equivalencies based on Energy Star guidelines using lumens or CBPB according to lamp type
†† Energy Star status: Certified as meeting Energy Star guidelines.
‡ UL 1993 Environmental Requirements for LED Lamps.
Location, damp – Exterior or interior location that is normally or periodically subject to condensation of moisture in, on, or adjacent to electrical equipment, and includes partially protected locations.
Location, dry – Location not normally subject to dampness, may include a location subject to temporary dampness, i.e., building under construction, provided ventilation is adequate to prevent an accumulation of moisture.
Location, wet – Location in which water or other liquid can drip, splash, or flow on or against electrical equipment.
Note: Product descriptions ending in "/TP" indicate a carded blister or clamshell package nested in a tray for shelf display. Cards also designed for hook display.

LED Tubes (continued)

Bulb	Watts	Order Code	Description	Base	Qty	MOL (in.)	Initial Lumens	Initial Color Temp	CRI	Life (L70)	DLC	UL	‡Location Rating	Additional Information
Remote 4 ft LED Glass Tubes (Operates on Remote Driver) (continued)														
T8	13	38950	LED15T8/G/4/840	G13	10	48	1800	4000K	80+	50K	Yes	Yes	Damp	Requires Driver
	13	38951	LED15T8/G/4/850	G13	10	48	1800	5000K	80+	50K	Yes	Yes	Damp	Requires Driver
	13	38952	LED15T8/G/4/865	G13	10	48	1800	6500K	80+	50K	-	YES	Damp	Requires Driver
	10	76194	LED12T8/G/4/830	G13	10	48	1550	3000K	80+	50K	Yes	Yes	Damp	Requires Driver
	10	76264	LED12T8/G/4/835	G13	10	48	1600	3500K	80+	50K	Yes	Yes	Damp	Requires Driver
	10	76265	LED12T8/G/4/840	G13	10	48	1650	4000K	80+	50K	Yes	Yes	Damp	Requires Driver
	10	76271	LED12T8/G/4/850	G13	10	48	1650	5000K	80+	50K	Yes	Yes	Damp	Requires Driver
	10	76278	LED12T8/G/4/865	G13	10	48	1650	6500K	80+	50K	-	Yes	Damp	Requires Driver
Remote 4 ft LED Glass T5 Tubes (Operates on Remote Driver)														
T5	31	91973	LED36T5/G/4/830	G5	20	46	4100	3000K	80+	50K	-	Yes	Damp	Requires Driver
	31	91976	LED36T5/G/4/835	G5	20	46	4200	3500K	80+	50K	-	Yes	Damp	Requires Driver
	31	91977	LED36T5/G/4/840	G5	20	46	4400	4000K	80+	50K	-	Yes	Damp	Requires Driver
	31	91997	LED36T5/G/4/850	G5	20	46	4500	5000K	80+	50K	-	Yes	Damp	Requires Driver
	31	92006	LED36T5/G/4/865	G5	20	46	4500	6500K	80+	50K	-	Yes	Damp	Requires Driver
Remote 3 ft LED Glass Tubes (Operates on Remote Driver)														
T8	16	38257	LED18T8/G/3/830	G13	10	36	1800	3000K	80+	50K	-	Yes	Damp	Requires Driver
	16	38258	LED18T8/G/3/835	G13	10	36	1800	3500K	80+	50K	-	Yes	Damp	Requires Driver
	16	38260	LED18T8/G/3/840	G13	10	36	1900	4000K	80+	50K	-	Yes	Damp	Requires Driver
	16	38261	LED18T8/G/3/850	G13	10	36	1900	5000K	80+	50K	-	Yes	Damp	Requires Driver
Remote 2 ft LED Glass Tubes (Operates on Remote Driver)														
T8	8	38933	LED9T8/G/2/830	G13	20	24	1000	3000K	80+	50K	Yes	Yes	Damp	Requires Driver
	8	38935	LED9T8/G/2/835	G13	20	24	1000	3500K	80+	50K	Yes	Yes	Damp	Requires Driver
	8	38936	LED9T8/G/2/840	G13	20	24	1100	4000K	80+	50K	Yes	Yes	Damp	Requires Driver
	8	38939	LED9T8/G/2/850	G13	20	24	1100	5000K	80+	50K	Yes	Yes	Damp	Requires Driver
	8	38943	LED9T8/G/2/865	G13	20	24	1000	6500K	80+	50K	-	Yes	Damp	Requires Driver
Remote 2 ft LED Glass T5 Tubes (Operates on Remote Driver)														
T5	13	76150	LED15T5/G/2/830	G5	20	24	1800	3000K	80+	50K	-	Yes	Damp	Requires Driver
	13	76164	LED15T5/G/2/835	G5	20	24	1850	3500K	80+	50K	-	Yes	Damp	Requires Driver
	13	76129	LED15T5/G/2/840	G5	20	24	1900	4000K	80+	50K	-	Yes	Damp	Requires Driver
	13	76167	LED15T5/G/2/850	G5	20	24	1900	5000K	80+	50K	-	Yes	Damp	Requires Driver
	13	76192	LED15T5/G/2/865	G5	20	24	1900	6500K	80+	50K	-	Yes	Damp	Requires Driver
Remote Glass U6 Tubes (Operates on Remote Driver)														
T8	13	43131	LED15T8/G/U6/830	G13	12	22.5	1700	3000K	80+	50K	-	Yes	Damp	Requires Driver
	13	43135	LED15T8/G/U6/835	G13	12	22.5	1800	3500K	80+	50K	-	Yes	Damp	Requires Driver
	13	43143	LED15T8/G/U6/840	G13	12	22.5	1800	4000K	80+	50K	-	Yes	Damp	Requires Driver
	13	43145	LED15T8/G/U6/850	G13	12	22.5	1800	5000K	80+	50K	-	Yes	Damp	Requires Driver

Remote Drivers

	Watts	Order Code	Description	Input Volts (V)	Qty	Output Current (A)	Fre-quency	Eff	Output	Output Voltage (V)	Temp (Min)	Temp (Max)	Dimmable	Additional Information
Lightech™ Drivers - Non-dimming														
	18	93100	LED9T8/DR/UN/2L	120-277	10	0.27x2	50/60 Hz	>.9	DC	26-34	-4°F	113°F		Maximum 2 Tube (non potted)
	30	38970	LED15T8/DR/UN/2L	120-277	10	.44x2	50/60 Hz	>.9	DC	26-34	-4°F	113°F		Maximum 2 Tube (non potted)
	36	82347	LED18T8/DR/UN/2L	120-277	10	0.53x2	50/60 Hz	>.9	DC	26-34	-4°F	113°F		Maximum 2 Tube (non potted)
	24	76289	LED12T8/DR/2L	120-277	10	.21x2	50/60 Hz	>.9	DC	26-34	-4°F	113°F		Maximum 2 Tube
	21	94384	LED21T8/DR/1L	120-277	10	0.62	50/60 Hz	>.9	DC	26-34	-4°F	113°F		Maximum 1 Tube
	42	94385	LED21T8/DR/2L	120-277	10	0.62x2	50/60 Hz	>.9	DC	26-34	-4°F	113°F		Maximum 2 Tube
Lightech™ Drivers - Dimming														
	42	28174	LED14/DR/D3L	120-277	10	0.43x3	50/60 Hz	>.9	DC	26-34	-4°F	113°F	▲	Maximum 3 Tube
	24	76290	LED12T8/DR/D2L	120-277	10	.21x2	50/60 Hz	>.9	DC	26-34	-4°F	113°F	▲	Maximum 2 Tube
	48	76318	LED12T8/DR/D4L	120-277	10	.21x4	50/60 Hz	>.9	DC	26-34	-4°F	113°F	▲	Maximum 4 Tube
	30	38974	LED15T8/DR/D2L	120-277	10	.44x2	50/60 Hz	>.9	DC	26-34	-4°F	113°F	▲	Maximum 2 Tube
	60	38975	LED15T8/DR/D4L	120-277	10	.44x4	50/60 Hz	>.9	DC	26-34	-4°F	113°F	▲	Maximum 4 Tube
	36	88141	LED18T8/DR/D2L	120-277	10	0.53x2	50/60 Hz	>.9	DC	26-34	-4°F	113°F	▲	Maximum 2 Tube
	72	88139	LED18T8/DR/D4L	120-277	10	0.53x4	50/60 Hz	>.9	DC	26-34	-4°F	113°F	▲	Maximum 4 Tube
	42	60041	LED21T8/DR/D2L	120-277	10	0.62x2	50/60 Hz	>.9	DC	26-34	-4°F	113°F	▲	Maximum 2 Tube
	84	62030	LED21T8/DR/D4L	120-277	10	0.62x4	50/60 Hz	>.9	DC	26-34	-4°F	113°F	▲	Maximum 4 Tube
	45	34016	LED21T8/DR/VLC2L	120-277	10	0.62x2	50/60 Hz	>.9	DC	26-34	-4°F	113°F	▲	Maximum 2 Tube
	72	63126	LED36T8/DR/D2L	120-277	10	1.06x2	50/60 Hz	>.9	DC	26-34	-4°F	113°F	▲	Maximum 2 Tube
	144	92013	LED36T8/DR/D4L	120-277	10	1.06x4	50/60 Hz	>.9	DC	26-34	-4°F	113°F	▲	Maximum 4 Tube

* The life rating is based on the hours of operation the lamp will provide before reaching 70% of its original lumen rating (L70).
** Minimum order quantity = 6
† Incandescent or halogen wattage equivalencies based on Energy Star guidelines using lumens or CBPB according to lamp type
†† Energy Star status: Certified as meeting Energy Star guidelines.
‡ UL 1993 Environmental Requirements for LED Lamps.
Location, damp – Exterior or interior location that is normally or periodically subject to condensation of moisture in, on, or adjacent to electrical equipment, and includes partially protected locations.
Location, dry – Location not normally subject to dampness, may include a location subject to temporary dampness, i.e., building under construction, provided ventilation is adequate to prevent an accumulation of moisture.
Location, wet – Location in which water or other liquid can drip, splash, or flow on or against electrical equipment.
Note: Product descriptions ending in "/TP" indicate a carded blister or clamshell package nested in a tray for shelf display. Cards also designed for hook display.

LED Lamps, Tubes and Modules

Series	Order Code	Description	Body Color	Nominal Lumens [1]	CCT (Kelvin)	CRI	Nominal Watts	Color Variation (MacAdam)	Rated Drive Current (mA)	Rated Life (hours) [2]
Infusion™ LED Modules										
M1000 Series	19192	M1000/827/W/G4	White	1000	2700	> 80	10.5	< 4-step	700	50,000
	19193	M1000/830/W/G4	White	1100	3000	> 80	10.5	< 4-step	700	50,000
	19195	M1000/835/W/G4	White	1100	3500	> 80	10.5	< 4-step	700	50,000
	19196	M1000/930/W/G4	White	800	3000	90	10.5	< 2-step	700	50,000
	19197	M1000/840/W/G4	White	1100	4000	> 80	10.5	< 4-step	700	50,000
M1500 Series	19198	M1500/827/W/G4	White	1400	2700	> 80	14.5	< 4-step	700	50,000
	19200	M1500/830/W/G4	White	1500	3000	> 80	14.5	< 4-step	700	50,000
	19201	M1500/835/W/G4	White	1500	3500	> 80	14.5	< 4-step	700	50,000
	19202	M1500/930/W/G4	White	1200	3000	90	14.5	< 2-step	700	50,000
	19207	M1500/840/W/G4	White	1500	4000	> 80	14.5	< 4-step	700	50,000
M2000 Series	19209	M2000/827/W/G4	White	2000	2700	> 80	21	< 4-step	1400	50,000
	19210	M2000/830/W/G4	White	2100	3000	> 80	21	< 4-step	1400	50,000
	19211	M2000/835/W/G4	White	2200	3500	> 80	21	< 4-step	1400	50,000
	19214	M2000/930/W/G4	White	1700	3000	90	21	< 2-step	1400	50,000
	19215	M2000/840/W/G4	White	2200	4000	> 80	21	< 4-step	1400	50,000
M3000 Series	19216	M3000/827/W/G4	White	2800	2700	> 80	29.5	< 4-step	1400	50,000
	19218	M3000/830/W/G4	White	3000	3000	> 80	29.5	< 4-step	1400	50,000
	19220	M3000/835/W/G4	White	3000	3500	> 80	29.5	< 4-step	1400	50,000
	19224	M3000/930/W/G4	White	2300	3000	90	29.5	< 2-step	1400	50,000
	19225	M3000/840/W/G4	White	3100	4000	> 80	29.5	< 4-step	1400	50,000
M4500 Series	19226	M4500/827/W/G4	White	4300	2700	> 80	46	< 4-step	1400	50,000
	19230	M4500/830/W/G4	White	4500	3000	> 80	46	< 4-step	1400	50,000
	19231	M4500/835/W/G4	White	4600	3500	> 80	46	< 4-step	1400	50,000
	19307	M4500/930/W/G4	White	3600	3000	90	46	< 2-step	1400	50,000
	19337	M4500/840/W/G4	White	4700	4000	> 80	46	< 4-step	1400	50,000

[1]Lumens are 'hot lumens' measured at steady state at a Tp temperature of 65°C
[2]Rated life refers to 70% lumen maintenance (L70).
Note: For use in dry location only or in luminaire which is designed and tested to an environmental location appropriate for intended operating conditions.

Series	Order Code	Description	Body Color	Nominal Lumens [1]	CCT (Kelvin)	CRI	Nominal Watts	Beam Angle (°)	Rated Drive Current (mA)	Rated Life (hours) [2]
Infusion™ LED Downlight Modules (DLM)										
DLM1000 Series	99607	DLM1000/927	White	1000	2700	92	13	90	700	50,000
	99608	DLM1000/930	White	1000	3000	92	13	90	700	50,000
	99609	DLM1000/935	White	1000	3500	92	13	90	700	50,000
	99610	DLM1000/940	White	1000	4000	92	13	90	700	50,000
DLM1500 Series	99611	DLM1500/927	White	1475	2700	92	19	90	700	50,000
	99612	DLM1500/930	White	1475	3000	92	19	90	700	50,000
	99613	DLM1500/935	White	1475	3500	92	19	90	700	50,000
	99614	DLM1500/940	White	1475	4000	92	19	90	700	50,000
DLM2000 Series	99615	DLM2000/927	White	2000	2700	92	25	90	700	50,000
	99616	DLM2000/930	White	2000	3000	92	25	90	700	50,000
	99617	DLM2000/935	White	2000	3500	92	25	90	700	50,000
	99618	DLM2000/940	White	2000	4000	92	25	90	700	50,000
DLM3000 Series	99619	DLM3000/927	White	3000	2700	92	37	90	1,400	50,000
	99620	DLM3000/930	White	3000	3000	92	37	90	1,400	50,000
	99621	DLM3000/935	White	3000	3500	92	37	90	1,400	50,000
	99622	DLM3000/940	White	3000	4000	92	37	90	1,400	50,000
DLM4000 Series	99623	DLM4000/927	White	3925	2700	92	49	90	1,400	50,000
	99624	DLM4000/930	White	3925	3000	92	49	90	1,400	50,000
	99625	DLM4000/935	White	3925	3500	92	49	90	1,400	50,000
	99626	DLM4000/940	White	3925	4000	92	49	90	1,400	50,000

	Order Code	Description	Body Color	Nominal Lumens [1]	CCT (Kelvin)	CRI	Nominal Watts	Color Variation (MacAdam)	Rated Drive Current (mA)	Rated Life (hours) [2]
Infusion™ LED Narrow Punch Modules (NPM)										
	98471	MP30/827/W/N	White	1300	2700	> 80	25	< 4-step	700	50,000
	98472	MP30/830/W/N	White	1400	3000	> 80	25	< 4-step	700	50,000
	98473	MP30/930/W/N	White	1100	3000	> 87	25	< 2-step	700	50,000
	98474	MP30/840/W/N	White	1500	4000	> 80	25	< 4-step	700	50,000

[1]Lumens are 'hot lumens' measured at steady state at a Tp temperature of 65°C
[2]Rated life refers to 70% lumen maintenance (L70).
Note: For use in dry location only or in luminaire which is designed and tested to an environmental location appropriate for intended operating conditions.

	Order Code	Description	Body Color	Corresponding Module Series	Beam Category	Nominal Beam Angle (°)
Infusion™ Optics						
	97204	OP1000/SP/W	White	1000	Spot	14
	97205	OP1500/SP/W	White	1500	Spot	14
	97208	OP1000/1500/FL/W OP3000/WFL/W	White	1000 and 1500 3000 and 4500	Flood Wide Flood	25 / 25 35 / 35
	65294	OP1000/1500/FL/B, OP3000/WFL/B	Black	1000 and 1500 3000 and 4500	Flood Wide Flood	25 / 25 35 / 35
	98480	OP10001500FL100W	White	1000 and 1500	Flood	25 /25
	98486	OP10001500FL100B	Black	1000 and 1500	Flood	25 /25
	99995	OP10001500WFL50W	White	1000 and 1500	Wide Flood	25 / 25
	99996	OP10001500WFL50B	Black	1000 and 1500	Wide Flood	25 / 25
	97206	OP1000/1500/WFL	White	1000 and 1500	Wide Flood	35 / 35
	65295	OP1000/1500/WFLB	Black	1000 and 1500	Wide Flood	35 / 35
	98483	OP10/15/WFL/100W	White	1000 and 1500	Wide Flood	35 / 35
	98489	OP10/15/WFL/100B	Black	1000 and 1500	Wide Flood	35 / 35
	97207	OP1000/1500/VWFL	White	1000 and 1500	Very Wide Flood	55 / 55
	65296	OP1000/1500VWFLB	Black	1000 and 1500	Very Wide Flood	55 / 55
	98485	OP10-45/VWFL100W	White	1000, 1500, 2000, 3000, 4500	Very Wide Flood	55 / 55 / 55 / 55 / 55
	98491	OP10-45/VWFL100B	Black	1000, 1500, 2000, 3000, 4500	Very Wide Flood	55 / 55 / 55 / 55 / 55
	64996	OP2000/3000/FL	White	2000 , 3000 , 4500	Flood	25 / 25 / 25
	65297	OP2000/3000/FL/B	Black	2000 , 3000 , 4500	Flood	25 / 25 / 25
	98481	OP2000/FL/100/W	White	2000	Flood	25
	98487	OP2000/FL/100/B	Black	2000	Flood	25
	64995	OP2000/WFL	White	2000	Wide Flood	35
	65298	OP2000/WFL/B	Black	2000	Wide Flood	35
	98484	OP20-45/WFL/100W	White	2000 , 3000 , 4500	Wide Flood	35 / 35 / 35
	98490	OP20-45/WFL/100B	Black	2000 , 3000 , 4500	Wide Flood	35 / 35 / 35
	64994	OP2000/3000/VWFL	White	2000 , 3000 , 4500	Very Wide Flood	55 / 55
	65301	OP2000/3000VWFLB	Black	2000 , 3000 , 4500	Very Wide Flood	55 / 55
	98482	OP30004500FL100W	White	3000 and 4500	Flood	25 / 25
	98488	OP30004500FL100B	Black	3000 and 4500	Flood	25 / 25
	94637	OP30/SP/50MM/W	White	NPM	Narrow Spot	13
	94638	OP30/SP/50MM/B	Black	NPM	Narrow Spot	13
	94635	OP30/SP/75MM/G2W	White	NPM	Narrow Spot	11
	94636	OP30/SP/75MM/G2B	Black	NPM	Narrow Spot	11
	94633	OP30/SP100MM/G2W	White	NPM	Narrow Spot	8
	94634	OP30/SP100MM/G2B	Black	NPM	Narrow Spot	8
	98477	OP30/SP/75MM/W	White	NPM	Narrow Spot	12
	98478	OP30/SP/100MM/W	White	NPM	Narrow Spot	10
	98475	OP30/SP/75MM/B	Black	NPM	Narrow Spot	12
	98476	OP30/SP/100MM/B	Black	NPM	Narrow Spot	10

	Order Code	Description	Body Color	Lead Insulation	Lead Length (mm)
Infusion™ Collar					
	61450	MACC07HOLDERW	White	None	n/a
	78835	MACC07HOLDERB	Black	None	n/a
	66233	MHOLDERW/PVC600	White	PVC	600
	66232	MHOLDERB/PVC600	Black	PVC	600

Notes

Stage and Studio Lamps

Bulb Identification

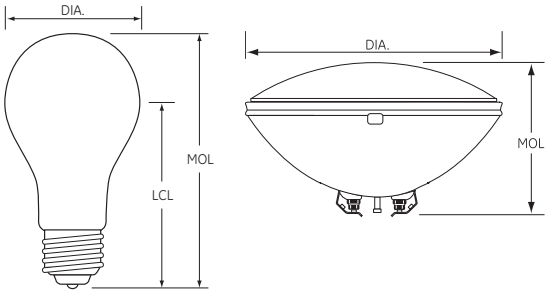

DIA: Diameter of bulb at widest point.

MOL: Maximum Overall Length including base or pins.

LCL: Distance between the center of the arc tube and the Light Center Length reference plane.

Note: Lamp drawings are not drawn to scale. Be sure to check size and dimension information when identifying each lamp.

To convert inches to millimeters, multiply the dimension (in inches) by 25.4 (i.e. 1.5" x 25.4 = 38.1 mm).

Lamp Locator

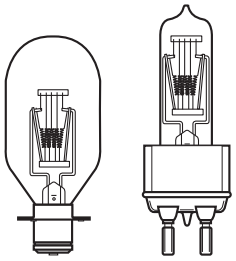

T12
Med Pf

T14
Med 2-Pin (G9.5)

Incandescent Lamps

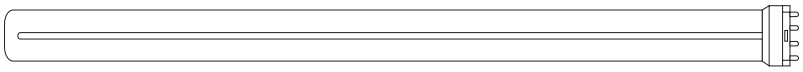

Biax®
2G11

Fluorescent Cinema Lamps

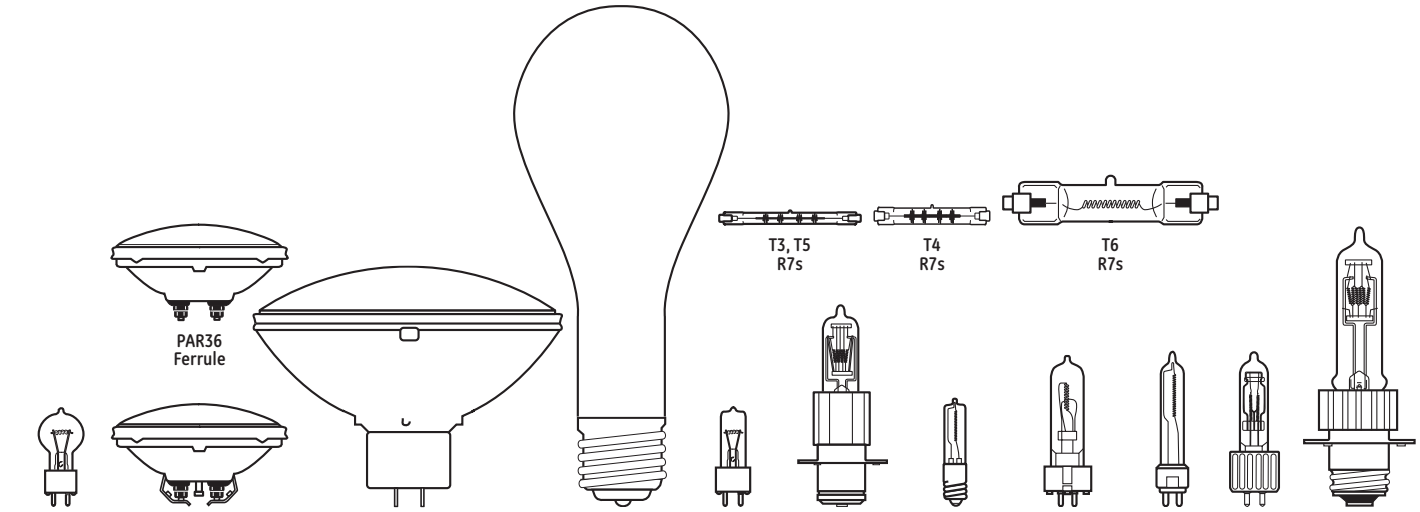

PAR36
Ferrule

T3, T5
R7s

T4
R7s

T6
R7s

G7
2-Pin Prefocus
(GX9.5 / GY9.5)

PAR36
Scrw Term

PAR64
Extended Mog End
Prefocus

PS52
Mog (E39)

T4, T6
Med 2-Pin
(G9.5)

T4, T6, T7, T8
Med Prefocus
(P28s)

T4
Mini-Cand

T5
2-Pin Prefocus
(GX9.5 / GY9.5)

T6
Med 2-Pin
(G9.5)

T6
Special

T7, T8, T10
Mog Prefocus
(P40s)

Quartzline® Tungsten Halogen

Lamp Locator (continued)

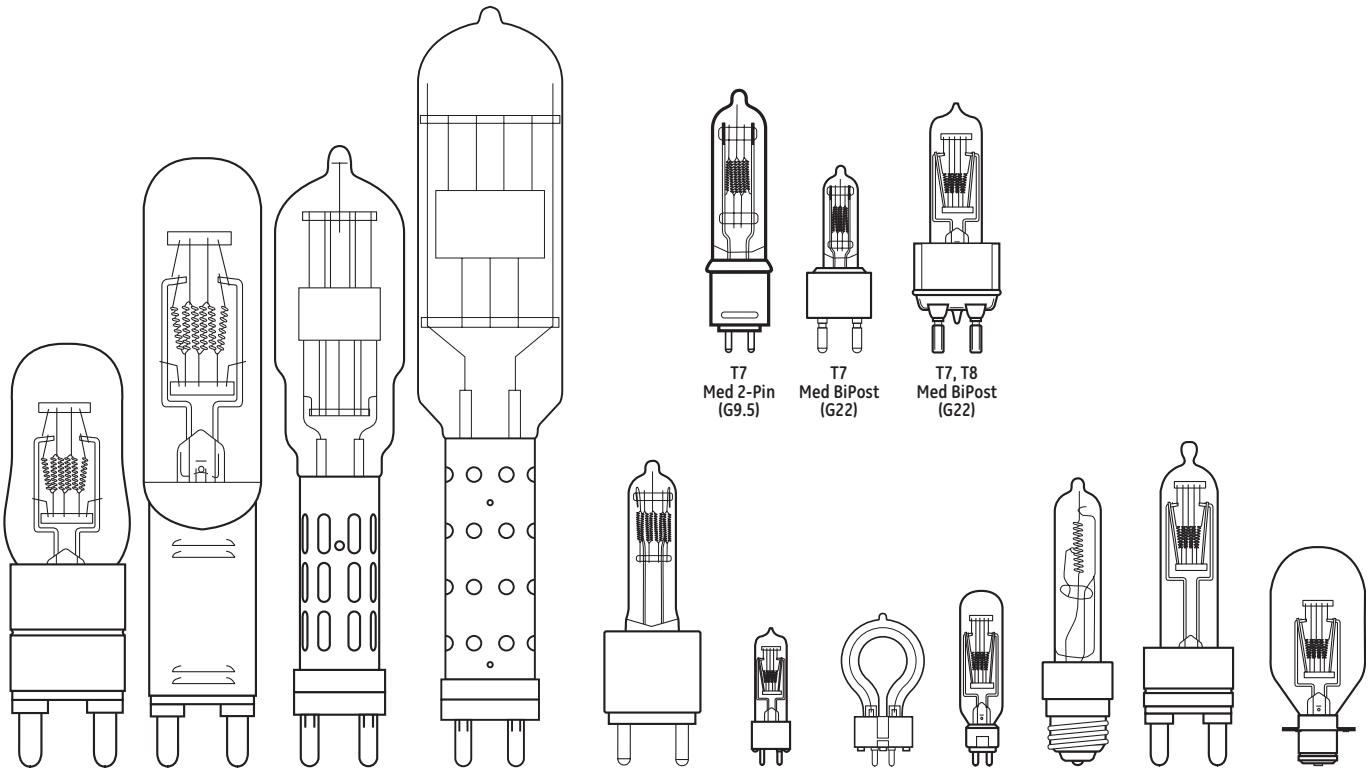

Quartzline® Tungsten Halogen (continued)

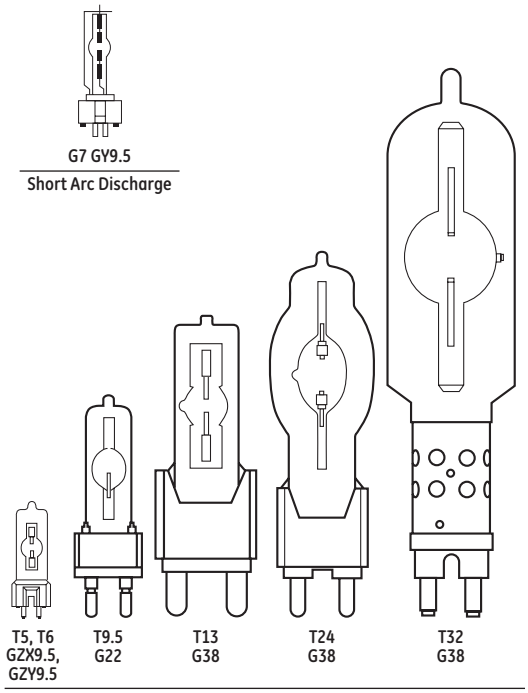

Single-Ended Hot Restrike

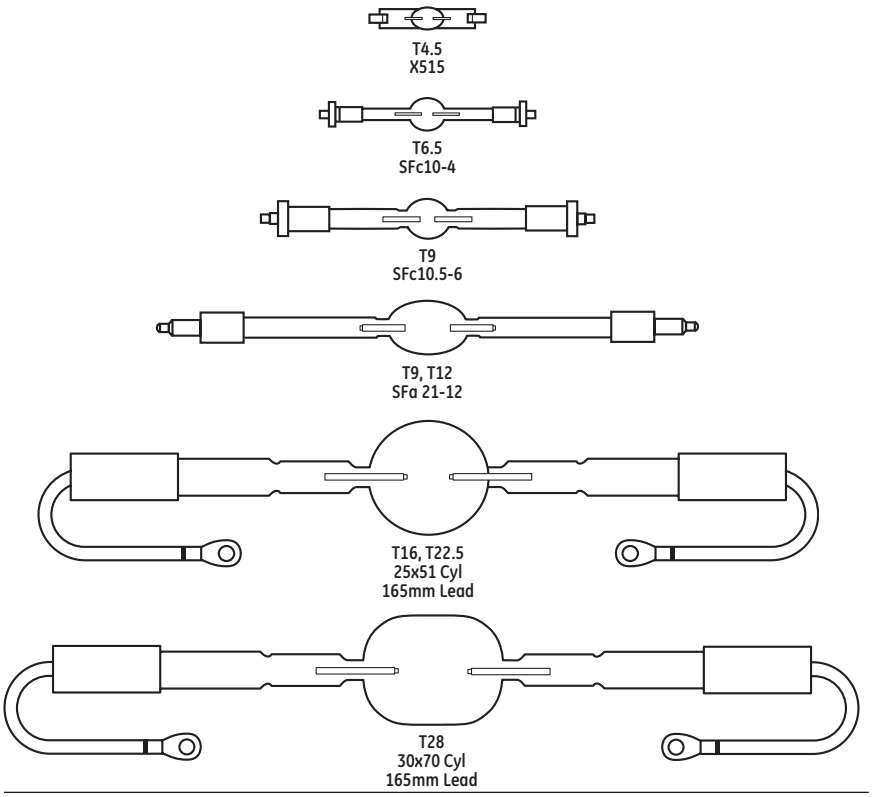

Double-Ended Hot Restrike

For the most up-to-date product information, see www.gelighting.com.

Lamp Locator (continued)

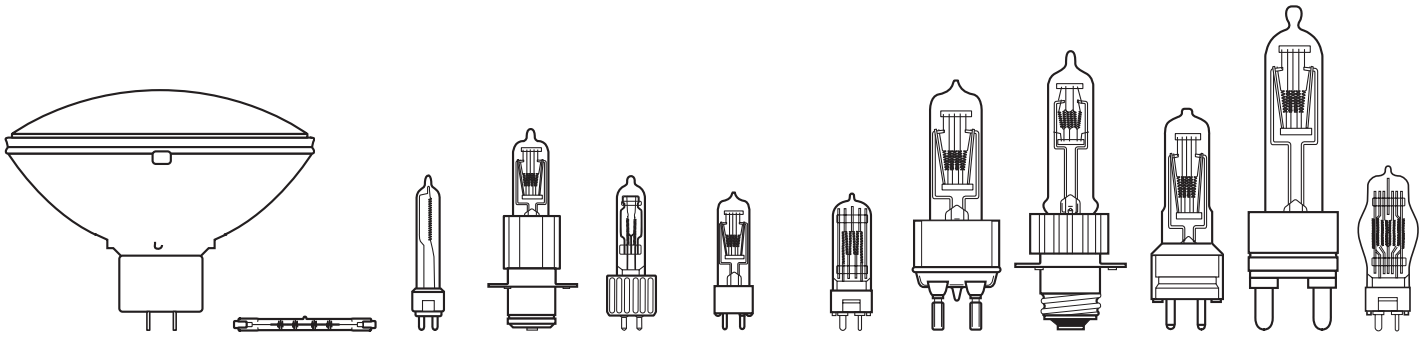

Quartzline® Tungsten Halogen High Voltage

Filament Identification

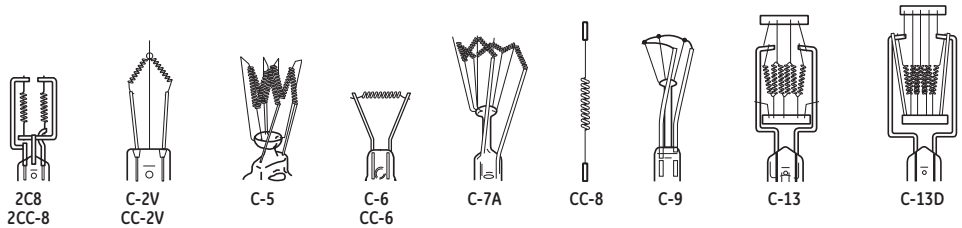

Base Identification

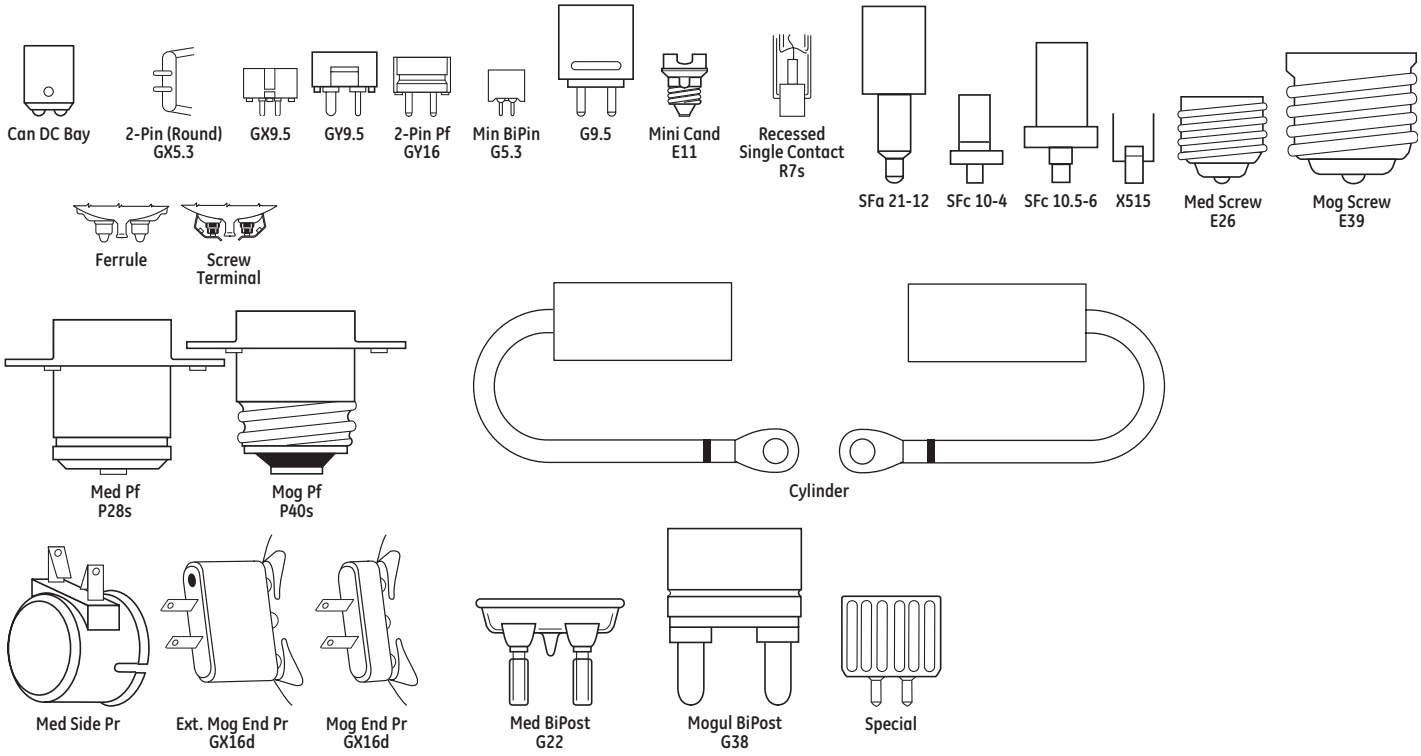

For the most up-to-date product information, see www.gelighting.com.

Introduction

GE has been a leading supplier to stage and studio users for many decades, and continues its pioneering work in the development of new and innovative light sources.

The primary change in recent years has been the migration from glass to quartz as the standard bulb material. The higher melting point of quartz enables bulb envelopes to be reduced in size and the halogen fillings to be run at higher pressures, leading to smaller, lighter, brighter, more energy-efficient and more reliable lamps.

GE's comprehensive range of single- and double-ended lamps is complemented by a group of PAR lamps, where the light source is enclosed in a sealed reflector unit.

The beam patterns of PAR lamps range from very narrow spot to wide-angle floods. This ensures consistency from lamp to lamp, interchangeability to suit the beam pattern needs of the moment and instant replaceability without the need to refocus and re-aim fixtures.

The sealed beam design prolongs the life of the inner lamp as well as protecting it from dust, vapor and other hazards, thereby ensuring high lumen maintenance over the life of the lamp.

PAR lamps may be used with very simple, lightweight, economical fixtures.

General Information

Operational Characteristics

Quartz halogen lamps are designed to be operated within close voltage tolerances, and excessive voltage can lead to drastically shortened life, albeit with significantly higher light output.

A second important variable is temperature. The tungsten halogen cycle does not operate properly below about 482°F (250°C) and quartz may begin to devitrify above about 1832°F (1000°C). Bulb envelopes should therefore be held in the range 482-1472°F (250-800°C).

The contact pins are plated to ensure good electrical connection with the lampholder. However, at temperatures above 350°C, the plating may lose adhesion, leading to deterioration in contact and possibly local hot spots, arcing and consequent irreparable damage to both lamp and holder. Note that if there is evidence that this has occurred, the lampholder should be replaced before the next lamp is fitted, otherwise it is likely to fail prematurely for the same reason.

Lamps normally fail by fusing of the filament. This is often followed by arcing, leading to very high currents which can cause the envelope and seals to fail and the lamp to shatter. A quick-acting, high-breaking capacity fuse should therefore be connected to the supply line in all applications. Suitable types are given in IEC 127, 241 and 269.

Chromised Seal Protection

Chromised seal protection for increased reliability.

Many Quartzline® Stage/Studio lamps have a special chromised seal protection, which allows lamp seal temperatures up to 500° C (vs traditional 350° C), which increases life and reliability.

If the package does not have this seal, lamp base temperatures for Quartzline® lamps should not exceed 350°C because, above that point, lead wires in the sealing area will deteriorate, and base cement can loosen, both causing premature lamp failure. Note overvoltaging a lamp will increase the seal heat.

Lamp Codes

GE Stage & Studio lamps are coded as such:

Lamp Description. This may be either an American National Standards Institute (ANSI) three-letter code such as EJG, or a descriptive code in the general form Q750T3/4CL. ANSI codes are assigned to lamp specifications—mechanical, electrical and photometric characteristics—filed with the Institute.

They ensure interchangeability among similarly coded lamps from different manufacturers. Most of these lamps are rated for 120-volt operation. In a few cases a pair of ANSI codes are given (e.g. BFL/BFK), where the first is the official code for the lamp and the second code describes lamps the specifications of which are met or exceeded. In such cases, the lamps may be used to replace lamps with either code.

Base designations conform to IEC standards.

Product Information

GE CSR/CSD Metal Halide Lamps

New GE range of metal halide lamps for use in a variety of applications including TV and film, stage, concerts, photographic and large-screen presentation and color simulation.

- Excellent color rendering Ra >90
- Daylight color temperature, typically 6000K
- Universal burning position
- High efficiency up to 100 Lm/Watt
- Hot restrike and dimmable with stable color temperature
- Superior color stability
- Excellent lumen maintenance
- Use with electronic or AC magnetic ballast/ignitor control gear
- Applications include inside and outside TV and film production, stage, concerts, sporting events, photographic studios, overhead and large-screen projection and color simulation.

GE Cinema Fluorescent Lamps

- High CRI (Color Rendering Index)...traditional fluorescent lamps have not been widely used in photography and film making because of relatively low CRI and the prominent green spike found in typical fluorescent phosphors. GE Lighting Cinema 32 and Cinema 55 lamps have corrected these deficiencies with products that now have a CRI of 95 (out of 100 max.) and colors that respond to the spectral sensitivity curves of film and electronic imaging media.
- Optional Shatter Resistance...GE Cinema 32 and 55 offer the option of GE's exclusive *covRguard*® shatter resistance that helps contain glass fragments if the lamps are broken. Reduce the possibility of glass-related injuries to irreplaceable talent, damage to expensive sets, contamination of delicate equipment or missing critical deadlines because GE offers shatter resistance. GE's covRguard® process wraps the Cinema lamps in a full 15-ml-thick casing of GE's exclusive Lexan® polycarbonate that helps contain the glass, phosphor and chemicals if the lamp is broken. Unlike some other shatter-resistant lamps, GE's covRguard® lamps require no assembly.

Product Information (continued)

- Superior Light Output...the GE covRguard® process offers maximum protection with minimal light loss...the lowest loss of initial light of other shielded products.
- Dependable UV Blocking...the GE covRguard® process also offers excellent UV blocking. CovRguard® blocks 98% of the UV that is normally transmitted from an unprotected fluorescent lamp—all UVC, all UVB and most of UVA. This is critical for protecting expensive sets and wardrobe from the fading effects of UV exposure.
- Chromaticity...the Cinema 32 has a chromaticity of X=.415 and Y=.377 with a CRI of 95. The Cinema 32 mixes well with both incandescent and quartz halogen light sources without color corrections. The Cinema 55 is a broad band spectrum daylight lamp with a chromaticity of X=.325 and Y=.321 and a CRI of 96. The Cinema 55 mixes well with ambient daylight and short arc discharge HID light sources without color corrections.

For more detailed information on all GE Stage and Studio lighting order "Showbiz®" 2008, PC 72475 from your GE sales representative.

Headings in this catalog section

The following terms and descriptions can help you when checking Stage/Studio lamp specifications and when ordering products. Within each product line, lamps are divided into families, within these families, lamps are then listed by wattage.

Watts: Energy used. To find actual energy used (kWh) multiply power (watts shown) x time divided by 1000.

Bulb Shape: Bulb shape followed by its size (the maximum diameter of the bulb expressed in eighths of an inch).

Base: The type of base (ANSI).

Volts: Lamp data is based on operation at rated voltage.

Order Code: It is important to use this five-digit code when ordering to ensure that you receive the exact product you require.

LIF Code: These are assigned by the Lighting Federation of London, U.K. They ensure electrical and mechanical interchangeability of similarly coded lamps. LIF codes are divided into groups according to the primary application of the lamps.

Description: The lamp's identification code.

ANSI Codes: These are 3-letter codes assigned by the American National Standards Institute. They provide a system of assuring mechanical and electrical interchangeability among similarly coded lamps from various manufacturers. General Electric uses the assigned ANSI Codes as Lamp Ordering Codes for most Projection Lamps.

Pack/Case Quantity: Number of product units packed in a pack or case.

Initial Lumens: Initial light output.

Approximate MBCP (Maximum Beam Candlepower): For reflector type lamps. Center Beam Candlepower is the intensity (candelas) at the center or maximum intensity of the beam.

Design Color Temperature – Kelvins (K): A measure of the visual "warmth" or "coolness" of the light from the lamp. The higher the value, the whiter or "cooler" the light appears.

Color Rendering Index (CRI): An indication of the ability of the lamp to render object colors in a normal, natural way. The higher the number (0-100), the better the color appearance.

Filament Type: Filaments are designated by a letter combination in which C is a coiled wire filament, CC is a coiled wire that is itself wound into a larger coil, and SR is a straight ribbon filament. Numbers represent the type of filament-support arrangement.

MOL (in): Maximum Overall Length in inches.

Light Center Length (LCL): This dimension defines the location of the filament in relation to the base. It is measured from the geometric center of the filament to a specified point on, or plane through, the base. Light Center Length is subject to manufacturing tolerances. Reference points/planes from which LCL is measured are tabulated on page 7-4 for the various styles of lamp bases.

Beam Spread: For reflector-type lamps. The total angle of the directed beam (in degrees) to where the intensity of the beam falls to 50% or 10% of the maximum value as indicated.

Rated Life – Hours: Lamp burning hours to rated life expectancy.

Footnotes and Safety Notices: See pg 7-11 for information.

Watts	Bulb Shape	Base	Volts	Order Code	LIF Code	Description	ANSI Codes	Pack Qty	Initial Lumens	MBCP	Design Color Temp K	CRI	CIE x	Color y	Arc Length (mm)	Filament Type	MOL (in)	LCL (in)	Beam Spread 50% H	Beam Spread 50% V	Rated Life (hrs)	Burning Position	Footnotes and Safety Notices
Quartzline® Tungsten Halogen																							
500	T6	Med Pf (P28s)	120	**11966**	T17	BTL-Q500 T6/CL/P		6	5500		3200					CC-2V	2.43	1.37			50		12

BTL- Q500 T6/CL/P

- BTL- : Identifies the lamp ANSI code.
- Q500 : Identifies the lamp's wattage. Q=Quartz Halogen
- T6/CL/P : Identifies the lamp shape and the bulb diameter in eighths of inches.

WHEN YOU DON'T KNOW THE LAMP DESCRIPTION

1. Identify bulb shape by using tables on page 7-2.
2. Measure bulb diameter using ruler in Appendix section page D-1 to determine width in eighths of an inch.
3. Identify base type using table on page 7-4.
4. Find your lamp in the table containing the bulb shape, size and base.

Watts	Bulb Shape	Base	Volts	Order Code	LIF Code	Description	ANSI Code	Pack Qty	Initial Lumens	Design Color Temp K	Rated Life (hrs)	Filament Type	MOL (in)	Burning Position	Footnotes and Safety Notices
Halogen Double-Ended															
300	T-3	R7s	120	43703		Q300T3/CL	EHM	6	5950	2950	2000	C-8	4.69	H4	62
500	T-3			23731		Q500T3/CL	FCL	12	11100	3000	2000	C-8	4.69	H4	62
				23744		Q500T3/CL/6		12	10950	2950	1500	C-8	4.69	H4	62
				23735	P2/30	FDF-Q500T3/4CL	FDF	12	13250	3200	400	C-8	4.69	H4	62
				23734	P2/31	FDN-Q500T3/4	FDN	12	12800	3200	400	C-8	4.69	H4	62,15
			130	23733		Q500T3/CL	DVS	12	10550	3000	2000	C-8	4.69	H4	62
650	T-4		120	30325	P2/6	FAD-Q650T4/4CL	FAD	24	16500	3200	100	CC-8	3.13	Any	62
750	T-3			23756	–	EJG-Q750T3/4CL	EJG	12	20600	3200	400	C-8	4.69	H4	62
				23755	–	EMD-Q750T3/4	EMD	12	19500	3200	400	C-8	4.69	H4	62,15
1000	T-5			30157		DXW-Q1000T5/4CL	DXW	24	28000	3200	150	CC-8	3.75	Any	62,27
				30374		FBY-Q1000T5/4	FBY	24	26000	3200	150	CC-8	3.75	Any	62,15
	T-6			33760		FER-Q1000T6/4CL	FER	6	27500	3200	500	CC-8	5.63	Any	62
	T-3			23797	P2/28	FCM-Q1000T3/4CL	FCM	12	28000	3200	400	C-8	4.69	H4	62
				23792	P2/29	FHM-Q1000/T3/4	FHM	12	27300	3200	400	C-8	4.69	H4	62,15,31
				33280	–	FFT-Q1000T3/1CL	FFT	12	26400	3200	400	C-8	6.56	H4	62
1500	T-4			23841	–	FDB-Q1500T4/4CL	FDB	12	41250	3200	400	C-8	6.56	H4	62
2000	T-10			88629	P2/27	FEY-Q2000T8/4CL	FEY	12	57000	3200	400	CC-8	5.63	H4	62
Halogen Single-Ended															
30	T-3.5	G5.3	10.8	37346		DZA	DZA	24	530	3100	400	C-6	2.00	BDTHCH	62
375	T-6	G9.5/Heat Sink	115	88540		HPL375/C 115V		12	10540	3250	300	4-C8	4.17	Any	62
				88539		HPL375/LL/C 115V		12	8000	3050	1000	4-C8	4.17	Any	62
500	T-6	G9.5	120	88624		EHD-Q500CL/TP	EHD	24	10,000	2900	2000	CC-8	4.13	Any	62
				88628		EHC-Q500/5CL	EHC	24	12,700	3150	500	CC-8	4.13	Any	62
	T-8	GY9.5		88467	CP82	FRG-Q500T8	FRG	24	13000	3200	150	C-13	3.54	BDTH	62
		G22		88509		EGN-Q500T8	EGN	12	13000	3200	150	C-13	5.51	BDTH	62
	T-6	P28s		88547	T17	BTL-Q500T6/CL/P	BTL	12	11000	3000	500	C-13	5.25	BDTH	62
				88546	–	BTM-Q500T6/4CL/2P	BTM	12	13000	3200	150	C-13	5.12	BDTH	62
	T-4	P28s		88617	–	EGE-Q500CL/P	EGE	12	10450	2950	2000	CC-8	6.00	Any	62
575	T-6	G9.5	115	88548		FLK-Q575T6	FLK	24	16500	3200	300	CC-8	4.13	Any	62
				88452		FLK/LL-Q575T6		24	12800	3100	1500	CC-8	4.13	Any	62
				88424		GLA-Q575T6/4CL	GLA	24	13000	3050	1500	C-13D	4.13	Any	62
				88423		GLC-Q575T6/5CL	GLC	24	14500	3200	300	C-13D	4.13	Any	62
		G9.5/Heat Sink		88438		HPL575/C 115V		12	16500	3200	300	4-C8	4.17	Any	62
				88435		HPL575/LL/C 115V		12	12360	3050	2000	4-C8	4.17	Any	62
			120	88436		HPL575/C 120V		12	16520	3200	300	4-C8	4.17	Any	62
				88434		HPL575/LL/C 120V		12	12360	3050	2000	4-C8	4.17	Any	62
600	G-7	GZ9.5	120	32955	A1/264	DYS/DYV/BHC	DYS	24	17000	3200	75	CC-6	2.50	BDTHCH	62
650	T-8	GY9.5		88462	CP89	FRK-Q650T8	FRK	24	16900	3200	200	C-13	3.54	BDTH	62
750	T-6	G9.5	115	88427		GLD-Q750T6/4CL	GLD	24	19000	3200	300	C-13D	4.13	Any	62
				88426		GLE-Q750T6/4CL	GLE	24	17400	3050	1500	C-13D	4.13	Any	62
		G9.5/Heat Sink		88437		HPL750/C 115V		12	22000	3200	300	4-C8	4.17	Any	62,7
				88428		HPL750/LL/C		12	16400	3050	2000	4-C8	4.17	Any	62,7
		G9.5	120	88626		EHG-Q750CL/TP	EHG	24	15000	3000	2000	CC-8	4.13	Any	62
				88627		EHF-Q750/4CL	EHF	24	20000	3200	300	CC-8	4.13	Any	62
	T-7	G22		88621		EGR-Q750T7/4CL	EGR	12	21000	3200	200	C-13D	5.00	BDTH	62,1
		P28s		88605	–	BTN-Q750T7/CL/2P	BTN	12	17600	3050	500	C-13D	4.75	BD30	62,1
				88606	–	BTP-Q750T7/4CL/2P	BTP	12	21000	3200	200	C-13D	4.75	BD30	62,1
	T-6	P28s		88619	–	EGG-Q750CL/P	EGG	12	15750	3000	2000	CC-8	6.00	Any	62
		G9.5/Heat Sink	230	88474		HPL750		12	19750	3200	300	6-C8	4.17	Any	62,7
1000	T-6	G9.5	120	88625	CP77	FEL-Q1000/4CL	FEL	24	27500	3200	300	CC-8	4.13	Any	62
	T-7	G22		88622		EGT-Q1000T7/4CL	EGT	12	28500	3200	250	C-13D	5.00	BDTH	62,1
		G38		88630		CYV-Q1000T7/4CL/BP	CYV	6	28500	3200	200	C-13D	8.00	BDTH	62,1
	PS-52	E39		39582	–	DKZ/DSE-Q1000PS52/4	DKZ	12	28000	3200	750	CC-8	13.00	Any	1,62,51
	ED-37	E39		19926		DSE/Q1000	DSE	10	28000	3200	750	CC-8	13.00	Any	1,62
	T-7	P28s		88607	–	BTR-Q1000T7/4CL/2P	BTR	12	28500	3200	250	C-13D	4.75	BD30	62,1
	T-6	P28s		88615	–	EGJ-Q1000/4/CL/P	EGJ	12	27500	3200	300	CC-8	6.00	Any	62
				88614	–	EGK-Q1000/4/P	EGK	12	26500	3200	300	CC-8	6.00	Any	62
	T-7	P40s		88608	–	BVT-Q1000T7/CL/MP	BVT	6	24500	3050	500	C-13D	7.25	BDTH	62,1
				88631	–	BVV-Q1000T7/4CL/MP	BVV	6	28500	3200	200	C-13D	7.25	BDTH	62,1

For the most up-to-date product information, see www.gelighting.com. To save energy costs, find the bulbs with the light output you need, then choose the one with the lowest watts. All footnotes and safety notices found at the end of this section (page 7-11).

Watts	Bulb Shape	Base	Volts	Order Code	LIF Code	Description	ANSI Code	Pack Qty	Initial Lumens	Design Color Temp K	Rated Life (hrs)	Filament Type	MOL (in)	Burning Position	Footnotes and Safety Notices
Halogen Single-Ended (continued)															
1500	T-10	G38	120	88612		CXZ-Q1500T10/4CL	CXZ	6	44500	3200	400	C-13	8.50	BDTH	62,1
	PS-52	E39		40357	–	DKX/DSF-Q1500PS52/4	DKX	12	41000	3200	1000	C-8	13.00	Any	1,62,51
2000	T-10	G38		88610		CYX-Q2000T10/4CL	CYX	6	59000	3200	350	C-13	8.50	BDTH	62,1
	T-8	E39		88611	–	BWF-Q2000/4CL	BWF	6	54000	3200	500	CC-8	7.50	Any	62
	T-10	P40s		88609	CP53	BVW-Q2000T10/4CL/MP	BVW	6	59000	3200	350	C-13	8.46	BDTH	62
5000	T-20	G38	120	41736	CP29	DPY-Q5000T20/4CL	DPY	6	143000	3200	500	C-13	11.00	BD45	62,1
				22959		HX5000		6	147000	3200	250	C-8	11.02	Any	62
10000	T-24	G38	120	24886	–	DTY-Q10M/T24/4CL	DTY	4	290000	3200	300	C-13	15.75	BD45	62,1
12000	T-26	GX38	120	48770		Q12MT26/4CL		1	420000	3400	150	C-13	16.13	BD45	62
			230	48771		Q12MT26/4CL		1	420000	3400	130	C-13	16.13	BD45	62
			240	48779		Q12MT26/4CL		1	420000	3400	130	C-13	16.13	BD45	62
20000	T-32	GX38	208	48772		BCM-Q20MT32/4CL	BCM	1	580000	3200	400	C-13	22.05	BD45	62
24000	T-32	GX38	230	48776		Q24MT32/4CL		1	800000	3400	150	C-13	22.05	BD45	62
			240	48777		Q24MT32/4CL		1	800000	3400	150	C-13	22.05	BD45	62

Watts	Bulb Shape	Base	Volts	Description	ANSI Code	LIF Code	Order Code	Pack Qty	MBCP	Design Color Temp K	Beam Spread 50%		MOL (in)	Rated Life (hrs)	Footnotes and Safety Notices
											H	V			
Halogen Sealed Beam															
500	PAR56	Mog End Pr	120	Q500PAR56NSP			43494	6	96000	2950	13	8	5	4000	63
			120	Q500PAR56MFL			43495	6	43000	2950	26	10	5	4000	63
			120	Q500PAR56WFL			43496	6	19000	2950	44	20	5	4000	63
	PAR64	ExMogEndPr	120	500PAR64/NSP			39406	12	110000	2800	12	7	6	2000	64
			120	500PAR64/MFL			39409	12	37000	2800	23	11	6	2000	64
			120	500PAR64/WFL			39412	12	13000	2800	42	20	6	2000	64
		MogEndPr	230	500PAR64/MFL			39411	12		2700	21	10	6	2000	64
			230	500PAR64/WFL			39414	12		2700	42	20	6	2000	64
650	PAR36	Ferrule	120	FAY-Q650PAR36/3D	FAY		41668	12	36000	5000	25	15	2.75	30	63
			120	FCW-Q650PAR36/6	FCW		41672	12	9000	3200	60	55	2.75	100	63
			120	FCX-Q650PAR36/7	FCX		41673	12	24000	3200	40	30	2.75	100	63
		Screw Terminals	120	DWE-Q650PAR36/1	DWE		41667	12	24000	3200	40	30	2.75	100	63
			120	FBE-Q650PAR36/5D	FBE		41669	12	36000	5000	25	15	2.75	30	63
			120	FBO-Q650PAR36/5	FBO		41671	12	67000	3400	25	15	2.75	30	63
1000	PAR64	ExMogEndPr	120	FFN-Q1000PAR64/1	FFN		13233	6	400000	3200	12	6	6	800	63
			120	FFP-Q1000PAR64/2	FFP		13229	6	330000	3200	14	7	6	800	63
			120	FFR-Q1000PAR64/5	FFR		13228	6	125000	3200	28	12	6	800	63
			120	FFS-Q1000PAR64/6	FFS		13227	6	40000	3200	48	24	6	800	63
			120	Q1000PAR64NSP			43497	6	200000	3000	15	8	6	4000	63
			120	Q1000PAR64MFL			43498	6	80000	3000	28	12	6	4000	63
			120	Q1000PAR64/WFL			43499	6	33000	3000	48	24	6	4000	63
1200	PAR64	ExMogEndPr	120	GFC-Q1200PAR64/1	GFC		88487	6	540000	3200	8	10	6	400	63

For the most up-to-date product information, see www.gelighting.com. To save energy costs, find the bulbs with the light output you need, then choose the one with the lowest watts. All footnotes and safety notices found at the end of this section (page 7-11).

CSR Metal Halide Lamps

Watts	Bulb Shape	Base	Volts	Description	Order Code	Pack Qty	Initial Lumens	Design Color Temp K	CRI	CIE x	Color y	Arc Length (mm)	Rated Life (hrs)	LCL (in)	MOL (in)	Burning Position	Footnotes and Safety Notices
Discharge-CSR/CSD (Daylight) Metal Halide Single-Ended Cold Start																	
300		PGJX28	95	CSR300/2/TAL	76160	4	23000	7800	75+			5	750	2.64	4.96	Any	14,63
575	T9	GX9.5	97	CSR575/2/SE	15378	10	46000	7200	65+	0.302	0.320	7	1000	2.56	4.92	Any	14,63
700	T9	G22	70	CSR700/2/SE	49491	10	55000	7200	70+	0.312	0.325	7.5	1000	2.95	6.10	Any	14,63
1200	T12	G22	100	CSR1200/2/SE	49490	6	110000	7200	75+	0.305	0.315	10	800	3.35	6.90	Any	14,63
1500		PGJX50	100	CSR1500/TAL/60/S	74873	4	135000	6000	85+			5	750	2.56	5.12	Any	14,63
Discharge-CSR (Daylight) Metal Halide, Single-Ended Short Arc																	
700	G7	GY9.5	70	CSR700/SA	15380	10	58000	5600	70+	0.330	0.342	4.3	500	1.53	3.35	Any	14,63
1200	G8	GY22	100	CSR1200/SA	21849	6	96000	5600	75+	0.326	0.330	7.5	750	2.32	5.31	Any	14,63
Discharge-CSR (Daylight) Metal Halide, Single-Ended Hot Restrike																	
125	T5	GZX9.5	80	CSR125/SE/HR	48461	10	9400	5600	90+	0.323	0.328	4	200	1.53	2.95	Any	14,63
12000	T32	G38	160	CSR12000/SE/HR	48468	4	1100000	6000	90+	0.323	0.328	28	250	10.04	17.72	Any	14,63
18000	T32	G51	225	CSR18000/SE/HR	22496	1	1650000	6000	90+	0.323	0.328	35	250	10.04	18.00	Any	14,63
Discharge-CSR (Daylight) Metal Halide, Double-Ended Hot Restrike																	
200	T4.5	X515	80	CSR200/DE	48450	10	16000	6000	90+	0.323	0.325	8	300		2.95	H15	14,63
575	T6.5	SFc 10-4 Sl/M4	95	CSR575/S/DE/70	70979	10	40000	7000	75+	0.307	0.309	7	750		5.43	Any	14,63
			100	CSR575/SS/DE/75	45231	10	44000	7500	70+	0.297	0.312	5	500		3.62	Any	14,63
700	T6.5		70	CSR700/S/DE/72	41357	10	59000	7200	75+	0.322	0.332	4	750		5.43	Any	14,63
1200	T6.5		100	CSR1200/S/DE/60	22494	10	110000	6000	90+	0.323	0.325	7	500		5.43	Any	14,63
1500	T6.5		115	CSR1500/S/DE/60	96800	10	135000	6000	85+	0.326	0.334	7	750		5.43	Any	14,63
4000	T12	Sfa21-12	200	CSR4000/DE	48455	6	410000	6000	90+	0.323	0.325	34	500		15.94	H15	14,63
18000	T28	30x70 Cyl 165mm	225	CSR18000/DE	48459	4	1650000	6000	90+	0.323	0.325	45	300		19.68	H15	14,63
Discharge-CSR (Daylight) Metal Halide, Single-Ended Hot Restrike UV Control																	
200	T6	GZY9.5	70	CSR200/SE/HR/UVC	48462	10	15000	5600	90+	0.323	0.328	5	200	1.53	3.15	Any	14,63
400	T7	GZZ9.5	70	CSR400/SE/HR/UVC	21853	10	32000	6000	85+	0.323	0.320	6.5	750	2.38	4.32	Any	14,63
575	T9.5	G22	95	CSR575/SE/HR/UVC	40460	10	49000	5600	80+	0.330	0.325	7	750		5.71	Any	14,63
800	T9.5	G22	95	CSR800/SE/HR/UVC	22495	10	64000	5600	90+	0.325	0.327	7	1000		5.71	Any	14,63
1200	T13	G38	100	CSR1200/SE/HR/UVC	27764	6	110000	5600	90+	0.333	0.333	10	750		7.87	Any	14,63
1800		G38	140	CSR1800/SE/HR/UVC	77390	4	165000	6000	90+	0.333	0.333	12	750		7.87	Any	14,63
2500	T19.5	G38	115	CSR2500/SE/HR/UVC	40482	6	220000	5600	90+	0.330	0.325	14	500		9.45	Any	14,63
4000	T24	G38	200	CSR4000/SE/HR/UVC	27765	6	380000	5600	90+	0.330	0.325	24	500		10.24	Any	14,63
6000	T26.5	G38	130	CSR6000/SE/HR/UVC	40492	6	540000	5600	90+	0.333	0.333	26	300		14.17	Any	14,63
9000	T26.5	G38	160	CSR9000/SE/HR	65852	6	875000	5800	90+	0.333	0.333	26	250		14.17	Any	14,63
12000	T32	G38	160	CSR12000/SE/HR/UVC	97272	4	1100000	6000	90+	0.323	0.328	28	250	18.04	17.72	Any	14.63

Watts	Bulb Shape	Base	Footnotes and Safety Notices	Order Code	Description	Case Qty	Lumens Initial	Design Color Temp K	MOL (in)	Rated Life (hrs)	CRI	Burning Position
Fluorescent Cinema Lighting												
Cinema Biax®												
55	T5	2G11-4 PIN	171	41869	F55BX/STUDIOBIAX32	10	4100	3200	21.10	8000	86	Any
			171	41873	F55BX/STUDIOBIAX56	10	4100	5600	21.10	8000	86	Any
			171	41903	F55BX/CINPLUS/32	10	2400	3200	21.10	2000	86	Any
			171	41911	F55BX/CINPLUS/56	10	2400	5600	21.10	2000	86	Any

ANSI Codes

ANSI Code	Order Code	Volts	Lamp Description
BCM	48772	208	BCM-Q20MT32/4CL
BCM	48773	230	BCM-Q20MT32/4CL
BCM	48774	240	BCM-Q20MT32/4CL
BTL	11966	120	BTL-Q500T6/CL/P
BTM	16465	120	BTM-Q500T6/4CL/2P
BTN	11953	120	BTN-Q750T7/CL/2P
BTP	11954	120	BTP-Q750T7/4CL/2P
BTR	11955	120	BTR-Q1000T7/4CL/2P
BVT	12554	120	BVT-Q1000T7/CL/MP
BVV	12553	120	BVV-Q1000T7/4CL/MP
BVW	12555	120	BVW-Q2000T10/4CL/MP
BWA	39587	120	BWA-Q2000/4CL/BP
BWF	37086	120	BWF-Q2000/4CL
CXZ	37564	120	CXZ-Q1500T10/4CL
CYV	42697	120	CYV-Q1000T7/4CL/BP
CYX	36636	120	CYX-Q2000T10/4CL
DKX	40357	120	DKX/DSF-Q1500PS52/4
DKZ	39582	120	DKZ/DSE-Q1000PS52/4
DPY	41736	120	DPY-Q5000T20/4CL
DSE	19926	120	DSE/Q1000
DSF	19927	120	DSF/Q1500
DTY	24886	120	DTY-Q10M/T24/4CL
DVS	23733	130	Q500T3/CL
DWE	41667	120	DWE-Q650PAR36/1

ANSI Code	Order Code	Volts	Lamp Description
DXW	30157	120	DXW-Q1000T5/4CL
DYS	32955	120	DYS/DYV/BHC
DZA	37346	10.8	DZA
EGE	39135	120	EGE-Q500CL/P
EGG	39137	120	EGG-Q750CL/P
EGJ	38853	120	EGJ-Q1000/4/CL/P
EGK	38852	120	EGK-Q1000/4/P
EGN	30373	120	EGN-Q500T8
EGR	39190	120	EGR-Q750T7/4CL
EGT	39191	120	EGT-Q1000T7/4CL
EHC	39789	120	EHC-Q500/5CL
EHD	39768	120	EHD-Q500CL/TP
EHF	39771	120	EHF-Q750/4CL
EHG	39770	120	EHG-Q750CL/TP
EHM	43703	120	Q300T3/CL
EJG	23756	120	EJG-Q750T3/4CL
EKB	33934	120	EKB-Q420/4CL/2PP
EMD	23755	120	EMD-Q750T3/4
FAD	30325	120	FAD-Q650T4/4CL
FAY	41668	120	FAY-Q650PAR36/3D
FBE	41669	120	FBE-Q650PAR36/5D
FBO	41671	120	FBO-Q650PAR36/5
FBY	30374	120	FBY-Q1000T5/4
FCL	23731	120	Q500T3/CL

ANSI Code	Order Code	Volts	Lamp Description
FCM	23797	120	FCM-Q1000T3/4CL
FCW	41672	120	FCW-Q650PAR36/6
FCX	41673	120	FCX-Q650PAR36/7
FDB	23841	120	FDB-Q1500T4/4CL
FDF	23735	120	FDF-Q500T3/4CL
FDN	23734	120	FDN-Q500T3/4
FEL	39769	120	FEL-Q1000/4CL
FER	33760	120	FER-Q1000T6/4CL
FEY	39790	120	FEY-Q2000T8/4CL
FFN	13233	120	FFN-Q1000PAR64/1
FFP	13229	120	FFP-Q1000PAR64/2
FFR	13228	120	FFR-Q1000PAR64/5
FFS	13227	120	FFS-Q1000PAR64/6
FFT	33280	120	FFT-Q1000T3/1CL
FHM	23792	120	FHM-Q1000/T3/4
FLK	11450	115	FLK-Q575T6
FRG	39623	120	FRG-Q500T8
FRK	39637	120	FRK-Q650T8
GFC	34808	120	GFC-Q1200PAR64/1
GLA	93428	115	GLA-Q575T6/4CL
GLC	93429	115	GLC-Q575T6/5CL
GLD	92771	115	GLD-Q750T6/4CL
GLE	92773	115	GLE-Q750T6/4CL

For the most up-to-date product information, see www.gelighting.com. To save energy costs, find the bulbs with the light output you need, then choose the one with the lowest watts. All footnotes and safety notices found at the end of this section (page 7-11).

Footnotes and Safety Notices

1 Filament with low noise construction.

2 New Product Code. See cross reference for previous code.

7 Pinned base to secure correct application.

14 Enclosed fixture only, per UL Standard 1572. In accordance to Federal Regulations (21CFR1040.30) the following notice applies:

WARNING: This lamp can cause serious skin burn and eye inflammation if the outer envelope is broken or punctured, and the arc tube continues to operate. Do not use where people will remain more than a few minutes unless adequate shielding or other safety precautions are used. Certain types of lamps that will automatically extinguish when the outer envelope is broken or punctured are commercially available.

15 Apparent lighted length slightly longer than similar clear lamp.

27 Has blackening collector grid on only one side of filament. Unless burned base down, install lamp so grid is above filament.

31 GE lamp is 240 volt; 250 volt lamp specified for Colortran.

51 Silica coated.

52 Rough service. 6 filament supports.

55 Burn BDTH, but avoid horizontal burning with support spine beneath filament to prevent premature arcing.

62 Safety Notice for exposed unshielded lamps (if shielded fixture use footnote 63)

⚠ Warning

Risk of electrical shock

- Turn power off before inspection, installation or removal

Risk of fire

- Keep combustible materials away from lamp
- Use in enclosed fixture rated for this product

Pressurized lamp—unexpected rupture may cause injury, fire, or property damage

- Use eye protection when handling lamp
- Do not touch glass with bare hands
- Use in enclosed fixtures rated for this product
- Do not use lamp if outer glass is scratched or broken
- Operate lamp only in specified position
- Do not exceed 110% of rated voltage

⚠ Caution

Risk of burn

- Allow lamp/fixture to cool before handling
- Turn power off before installing lamp

Lamp may shatter and cause injury if broken

- Do not use lamp if outer glass is scratched or broken
- Dispose of lamp in a closed container
- Wear safety glasses and gloves when handling lamp

Lamp emits UV radiation which may cause eye/skin irritation. RG-2.

- Limit unshielded exposure to less than 15 minutes per day

63 Safety Notice for PAR lamps and enclosed, shielded lamps

⚠ Warning

Risk of electrical shock

- Turn power off before inspection, installation or removal

Risk of fire

- Keep combustible materials away from lamp
- Use in fixture rated for this product

A damaged lamp emits UV radiation which may cause eye/skin injury

- Turn power off if glass is broken. Remove and dispose of lamp

Pressurized lamp—unexpected rupture may cause injury, fire, or property damage

- Use in enclosed fixtures rated for this product
- Do not use lamp if outer glass is scratched or broken
- Do not exceed 110% of rated voltage
- Avoid direct water/liquid contact

⚠ Caution

Risk of burn

- Allow lamp/fixture to cool before handling
- Turn power off before installing lamp

Lamp may shatter and cause injury if broken

- Do not use lamp if outer glass is scratched or broken
- Dispose of lamp in a closed container

64 High Wattage Incandescent Par Lamps

⚠ Warning

Risk of electrical shock

- Turn power off before inspection, installation, or removal

Risk of fire

- Keep combustible materials away from lamp

Unexpected lamp rupture may cause injury, fire, or property damage

- Avoid direct water/liquid contact
- Use in enclosed fixtures rated for this product

Burning Position Key

H4	operate horizontally +-4 degrees
H15	operate horizontally +-15 degrees
BDTH	operate base down to horizontal
BDTHCH	operate base down to horizontal with filament coil axis horizontal
ANYCH	base in any position, but with filament coil axis horizontal
BD30	base down +-30 degrees
BD45	base down +-45 degrees

Notes

Miniature, Sealed Beam and Automotive Lamps

GE LIGHTING: INNOVATING TECHNOLOGY

A revolutionary advance from a leader in automotive lighting.

Every technological advance we make is backed by our global reputation as a trusted partner, and an unwavering commitment to the customers we serve. With a wide variety of quality options, you can be sure that there is a GE Automotive lighting product for everything on wheels.

imagination at work

GE HAS THE RIGHT LIGHT FOR YOUR VEHICLE

Product Product Producto	Feature Feature Características	Benefit Benefit Beneficios	Miniatures Miniatures Miniaturas	Sealed Beam Faisceau étanche Haz sellado	Fog Feu de brouillard Faro antiniebla	Halogen Composite Composite Halogène Compuestos Halógenos
GE NIGHTHAWK™ LED	Superior LED technology Superior technologie LED Superior tecnología LED	Bright, white light that's virtually maintenance-free Lumineux, lumière blanche et pratiquement sans entretien Luz blanca brillante que es virtualmente libre de mantenimiento		✓		
GE NIGHTHAWK™ Xenon	HID caliber performance and style HID performance de calibre et de style HID calidad rendimiento y estilo	Exceptional visibility Une visibilité exceptionnelle Visibilidad excepcional				✓
GE NIGHTHAWK™ Platinum	Up to 90% more light* Jusqu'à 90% de lumière en plus* Hasta un 90% más de luz*	Better visibility during night time driving Une meilleure visibilité en conduite de nuit Una mejor visibilidad durante la noche conducción				✓
GE NIGHTHAWK™ Sport	Crisp, blue-white light Croustillant, bleu-blanc lumineux Crespo, luz blanca azulada	Increased contrast provides improved visibility Augmentation du contraste fournit une meilleure visibilité Mayor contraste para una mayor visibilidad		✓		✓
GE NIGHTHAWK™	Up to 50% more light* Jusqu'à 50% de lumière en plus* Hasta un 50% más de luz*	Improved visibility during night time driving Visibilité améliorée pendant la nuit lors de la conduite Mejora de la visibilidad durante la noche conducción	✓	✓	✓	✓
Long Life	2-6x the life of a standard** 2-6x plus longue durée de vie** Ya 2-6x vida**	Save time and money, less maintenance Économisez du temps et de l'argent, moins de maintenance Ahorre tiempo y dinero, menor mantenimiento	✓	✓		✓
Standard	High quality OE value Haute qualité OE valeur OE valor Alta calidad	Dependable performance Performances fiables Rendimiento fiable	✓	✓	✓	✓

*GE NIGHTHAWK™ halogen lamps focus more light in an area illuminated with more than 15,000 candelas in light intensity compared to a standard halogen headlamp bulb. Specific light levels vary by bulb type and headlamp assembly. See page 8-14 for illustration.
**Long Life lamps last up to 2-6x longer when compared to standard GE halogen lamps.

REVOLUTIONARY HEADLIGHT PERFORMANCE

GE NIGHTHAWK™ XENON:
Get closer to the look and feel of HID lighting without the cost or hassle of conversion.

Few things attract an auto enthusiast's gaze like the cutting-edge look of HID headlamps. That is, until they see the high cost of conversion. Now there's a revolutionary solution that delivers performance and style close to HID-caliber lighting at a fraction of the cost: GE NIGHTHAWK™ XENON headlamps.

up to 120% more light*

bright white light

breakthrough performance

exceptional visibility

GE NIGHTHAWK™ PLATINUM:
High performance lamps for visibility, convenience and style.

No matter the nighttime driving conditions, GE NIGHTHAWK™ PLATINUM headlamps give you a better chance of seeing – and reacting to – what's ahead of you. The bottom line is: with more light on the road, you'll have more peace of mind.

up to 90% more light*

improved reaction time

greater visibility

THE RIGHT LIGHT

FOR NEARLY EVERYTHING ON WHEELS

Feature / Benefit	GE NIGHTHAWK™ LED: 15,000 HOUR LAMP	GE NIGHTHAWK™ XENON: UP TO 120% MORE LIGHT**	GE NIGHTHAWK™ PLATINUM: UP TO 90% MORE LIGHT**	GE NIGHTHAWK™ SPORT: UP TO 50% MORE LIGHT**
	3 yr warranty*	up to 120% more light*	up to 90% more light*	up to 50% more light*
	bright white light	bright white light	improved reaction time	more visibility
	exceptional visibility	breakthrough performance	greater visibility	blue white color
		exceptional visibility		
Available in:	LED 7" RND, LED 200 RECT, LED 4.5" RND	9003, 9005, 9006, 9007, H1, H4, H7, H11	9003, 9004, 9005, 9006, 9007, H1, H4, H7, H11, H13	9003, 9004, 9005, 9006, 9007, H7, H13, H4656, H4666, H6024, H6054

*GE NIGHTHAWK™ halogen lamps focus more light in an area illuminated with more than 15,000 candelas in light intensity compared to a standard halogen headlamp bulb. Specific light levels vary by bulb type and headlamp assembly. See page 8-14 for illustration.

For the most up-to-date product information, see www.gelighting.com.

Miniature, Sealed Beam and Automotive Lamps

GE NIGHTHAWK™: UP TO 50% MORE LIGHT**	LONG LIFE: 2-6X LONGER LIFE**	STANDARD	HID	
up to 50% more light* improved reaction time more visibility	OEM quality 2-6X longer life* less time on maintenance	smart value OEM quality meets DOT requirements	exceptional visibility lasting performance white light	Feature / Benefit
9003, 9004, 9005, 9006, 9007, H1, H4, H7, H13, H4656, H4666, H6024, H6054	9003, 9004, 9005, 9006, 9007, H1, H7, H11, H5024, H5051, H5054, H5062	9003, 9004, 9005, 9006, 9007, 9008, H1, H3, H4, H7, H9, H11, H4656, H4666, H6024, H6054	D1S, D2R, D2S, D2S BLUE	Available in:

*GE NIGHTHAWK™ halogen lamps focus more light in an area illuminated with more than 15,000 candelas in light intensity compared to a standard halogen headlamp bulb. Specific light levels vary by bulb type and headlamp assembly. See page 8-14 for illustration.
**Long Life lamps last up to 2-6x longer when compared to standard GE halogen lamps.

North American Vehicles
Véhicules d'Amérique du Nord
Vehículos Norteamericanos

FRONT VIEW
VUE DE FACE
VISTA FRONTAL

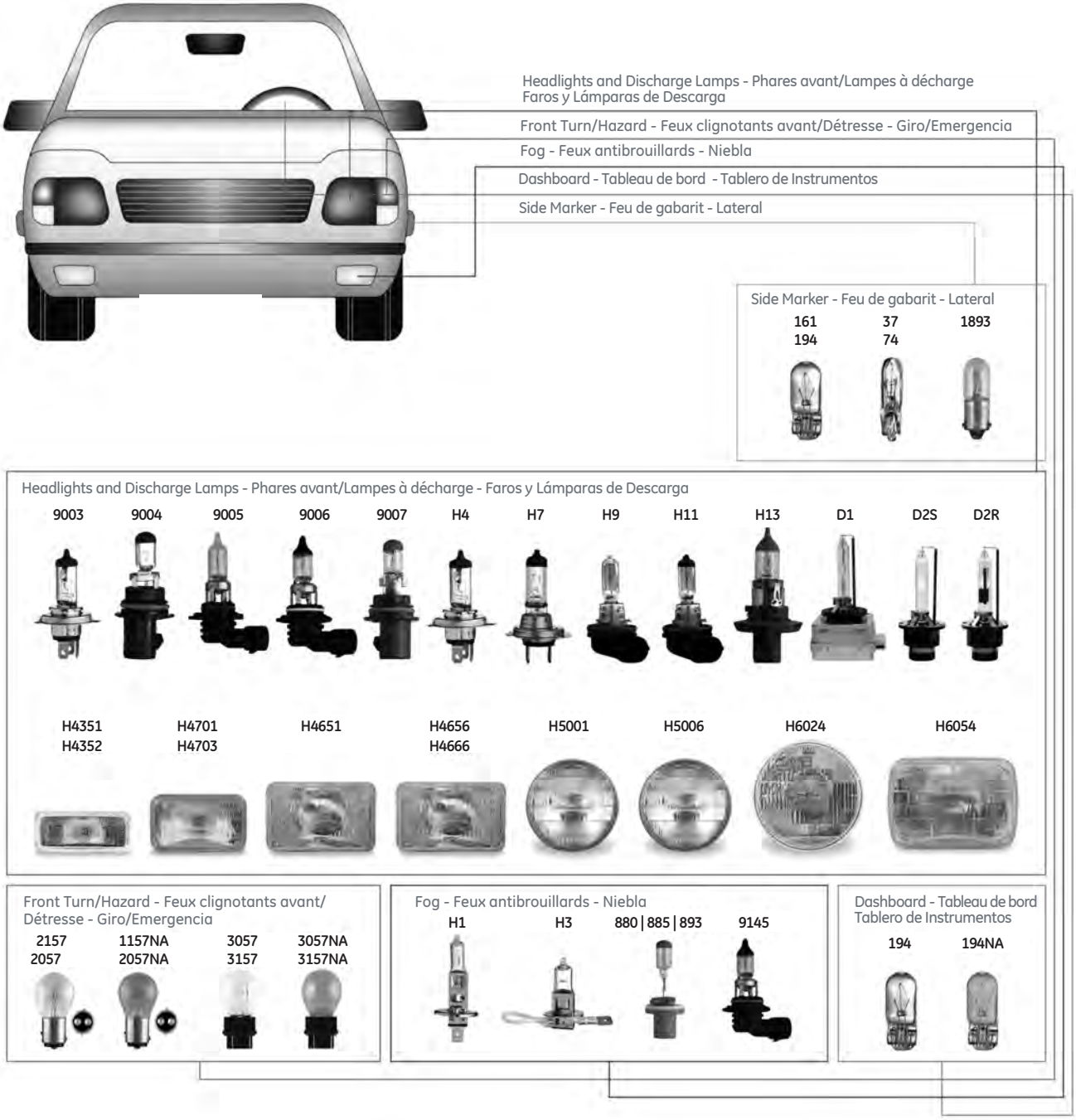

REAR VIEW
VUE DE DOS
VISTA POSTERIOR

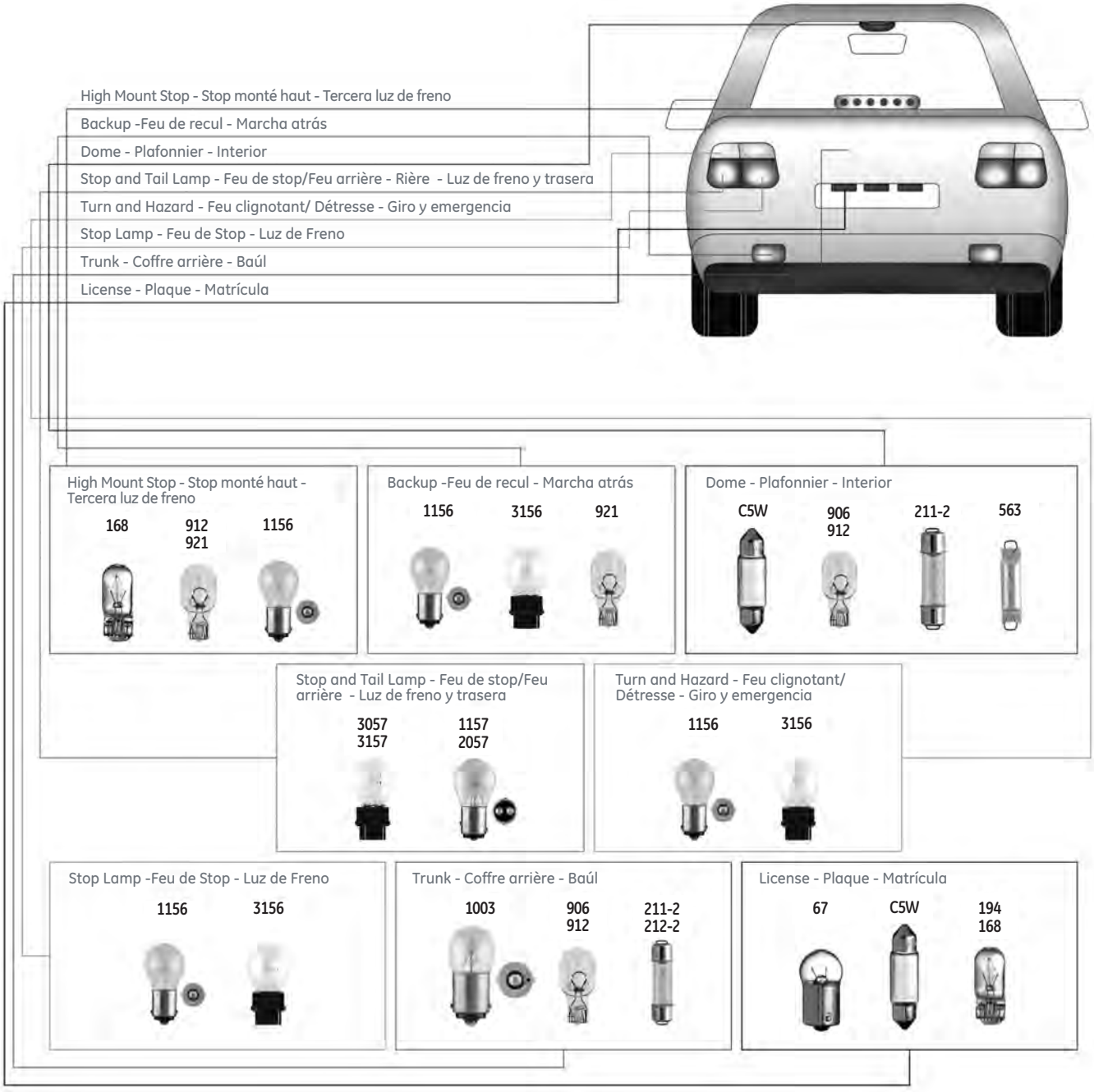

GE NIGHTHAWK™ Automotive Lighting
Éclairage Autmobile GE NIGHTHAWK™
Illuminación para automóviles GE NIGHTHAWK™

GE NIGHTHAWK LED™: 15,000 Hour Lamp

Product Code	Lamp Description	Direct Replacement For	Color	Meets DOT Requirements	Lamps/ Card	Cards/ Inner	Cards/ Master
69821	NH LED 7" RND	6012, 6014, 6015, 6016, 6017, H5024, H6024	5600K	✓	1	6	24
69822	NH LED 200 RECT	6052, 6053, H5054, H6054	5600K	✓	1	6	24
69823	NH LED 4.5" RND	Coming 2014	5600K	✓	1	6	24

GE NIGHTHAWK™ XENON: Up to 120% More Light†

Product Code	Lamp Description	Lamps/ Card	Cards/ Inner	Cards/ Master
69861	9003 NHX/BP2	2	3	12
69862	9005 NHX/BP2	2	3	12
69863	9006 NHX/BP2	2	3	12
69864	9007 NHX/BP2	2	3	12
69857	H1 NHX/BP2	2	3	12
69858	H4 NHX/BP2	2	3	12
69860	H7 NHX/BP2	2	3	12
69865	H11 NHX/BP2	2	3	12

GE NIGHTHAWK™ PLATINUM: Up to 90% More Light††

Product Code	Lamp Description	Lamps/ Card	Cards/ Inner	Cards/ Master
75814	9003NHP/BP2	2	3	12
75815	9004NHP/BP2	2	3	12
75816	9005NHP/BP2	2	3	12
75817	9006NHP/BP2	2	3	12
75818	9007NHP/BP2	2	3	12
78134	H1-55NHP/BP2	2	3	12
75820	H4-60NHP/BP2	2	3	12
75821	H7-55NHP/BP2	2	3	12
62267	H11-55NHP/BP2	2	3	12
62430	H13NHP/BP2	2	3	12

†GE NIGHTHAWK™ XENON headlamps focus up to 120% more light on the road - flux projected to area with more than 15,000 candelas in light intensity compared to a standard halogen headlamp bulb. Specific light levels vary by bulb type and headlamp assembly.
††GE NIGHTHAWK™ PLATINUM headlamps focus up to 90% more light on the road - flux projected to area with more than 15,000 candelas in light intensity compared to a standard halogen headlamp bulb. Specific light levels vary by bulb type and headlamp assembly.

GE NIGHTHAWK SPORT™: Up to 50% More Light‡

Product Code	Lamp Description	Lamps/ Card	Cards/ Inner	Cards/ Master
89139	9003NHS/BP	1	3	24
66004	9003NHS/BP2	2	3	12
97698	9004NHS/BP	1	3	24
97699	9004NHS/BP2	2	3	12
89140	9005NHS/BP	1	3	24
66005	9005NHS/BP2	2	3	12
97700	9006NHS/BP	1	3	24
97701	9006NHS/BP2	2	3	12
97696	9007NHS/BP	1	3	24
97697	9007NHS/BP2	2	3	12
89141	H7-55NHS/BP	1	3	24
66006	H7-55NHS/BP2	2	3	12
78654	H13NHS/BP2	2	3	12
97695	H4656NHS	1	-	6
97694	H4666NHS	1	-	6
97693	H6024NHS	1	-	6
97692	H6054NHS	1	-	6

GE NIGHTHAWK™ Composite Headlamps: Up to 50% More Light on the Road‡‡

Product Code	Lamp Description	Lamps/ Card	Cards/ Inner	Cards/ Master
25150	9003NH/BP	1	3	24
25107	9003NH/BP2	2	3	12
25149	9004NH/BP	1	3	24
25106	9004NH/BP2	2	3	12
25148	9005NH/BP	1	3	24
25105	9005NH/BP2	2	3	12
25147	9006NH/BP	1	3	24
25104	9006NH/BP2	2	3	12
25146	9007NH/BP	1	3	24
25103	9007NH/BP2	2	3	12
25159	H1-55NH/BP	1	3	24
25092	H1-55NH/BP2	2	3	12
25094	H4-60NH/BP1	1	3	24
25095	H7-55NH/BP2	2	3	12
25160	H7-55NH/BP	1	3	24
78653	H13NH/BP2	2	3	12

GE NIGHTHAWK™ Fog Lamps: Up to 30% More Light on the Road‡‡

Product Code	Lamp Description	Lamps/ Card	Cards/ Inner	Cards/ Master
25163	880NH/BP	1	3	24
25101	880NH/BP2	2	3	12
25172	893NH/BP	1	3	24
25102	893NH/BP2	2	3	12

GE NIGHTHAWK™ Sealed Beam Headlamps: Up to 30% More Light on the Road‡‡

Product Code	Lamp Description	Lamps/ Card	Cards/ Inner	Cards/ Master
25098	H4656NH	1	-	6
28157	H4666NH	1	-	6
28153	H6024NH	1	-	6
25097	H6054NH	1	-	6

‡GE NIGHTHAWK™ SPORT halogen lamps focus up to 50% more light in an area illuminated with more than 15,000 candelas in light intensity compared to a standard halogen headlamp bulb.
‡‡These GE NIGHTHAWK™ lamps focus 30%-50% more light in an area illuminated with more than 15,000 candelas in light intensity compared to a standard halogen headlamp bulb. Specific light levels vary by bulb type and headlamp assembly. See page 8-14 for light distribution illustration.

Long Life and Discharge Automotive Lighting
Long Life et Éclairage Automobile de Décharge
Illuminación para Automóviles Long Life y Descarga

Long Life Headlamps: 2-6X Longer Life**

Product Code	Lamp Description	Lamps/ Card	Cards/ Inner	Cards/ Master
78935	9003LL/BP	1	6	48
13993	9004LL/BP	1	6	48
45866	9005XSLL/BP	1	6	48
45868	9006XSLL/BP	1	6	48
78639	9007LL/BP	1	6	48
12777	H1-LL	1	-	300
78640	H7-55LL/BP	1	6	48
89255	H11-55LL/BP	1	6	48
19428	H5024	1	-	6
19411	H5051	1	-	6
19429	H5054	1	-	6
19412	H5062	1	-	6

HID

Ordering information

Description	Characteristic	Watts	Color Temperature	Packaging	Product Code
D1S Unit	HID projection beam	35	4200K	1/4/12 box	78734
D2R Unit	HID reflector beam	35	4000K	1/6/24 box	80851
D2R Bulk	HID reflector beam	35	4000K	144 bulk	46911
D2S Unit	HID projection beam	35	4200K	1/6/24 box	25088
D2S Bulk	HID projection beam	35	4200K	144 bulk	48504
D2S Blue	Off road only - no highway use	35	5100K	1/32 box	90057

**Long Life lamps last up to 2-6x longer when compared to standard GE halogen lamps.

Standard Headlamps

Product Code	Lamp Description	Lamps/ Card	Cards/ Inner	Cards/ Master
22389	9003	1	-	100
22432	9003/BP	1	6	48
72252	9003/BP2	2	-	4
13382	9004	1	-	100
18508	9004/BP	1	6	48
14604	9004/BP2	2	-	6
13384	9005	1	-	100
18509	9005/BP	1	6	48
13397	9006	1	-	100
18510	9006/BP	1	6	48
25135	9006/BP2	2	-	4
20551	9007	1	-	100
22388	9007/BP	1	6	48
25136	9007/BP2	2	-	4
71342	9008 (H13)/BP	1	6	48
40843	9145/BP	1	6	48
40336	H1-55/BP	1	6	48
12339	H3-55/BP	1	6	48
12341	H3-100/BP	1	6	48
27334	H4-60/55	1	-	10
18132	H4-60/55/BP	1	6	48
89256	H4-60MS/BP	1	3	24
26374	H7-55/BP	1	6	48
29047	H8-35W BP	1	6	48
29049	H9-65W BP	1	6	48
23762	H11-55/BP	1	6	48
18533	H4656	1	-	6
18535	H4666	1	-	6
18525	H6024	1	-	6
18534	H6054	1	-	6

Standard Fog Lamps

Product Code	Lamp Description
12320	880/BP
12334	881/BP
12335	885/BP
14689	886/BP
12336	889/BP
12337	890/BP
12308	891/BP
12338	893/BP

Product Code	Lamp Description
22112	894/BP
22113	896/BP
98093	898/BP
22111	899/BP
40843	9145/BP
40336	H1-55/BP
12339	H3-55/BP
12341	H3-100/BP

Heavy Duty Truck Automotive Lighting
Éclairage Automobile de Camions
Illuminación de Alto Rendimiento para Camiones

GE NIGHTHAWK LED™: 15,000 Hour Lamp

Product Code	Lamp Description	Direct Replacement For	Color	Meets DOT Requirements	Lamps/ Card	Cards/ Inner	Cards/ Master
69821	NH LED 7" RND	6012, 6014, 6015, 6016, 6017, H5024, H6024	5600K	✓	1	6	24
69822	NH LED 200 RECT	6052, 6053, H5054, H6054	5600K	✓	1	6	24
69823	NH LED 4.5" RND	Coming 2014	5600K	✓	1	6	24

Long Life Headlamps: 2-6X Longer Life**

Product Code	Lamp Description	Lamps/ Card	Cards/ Inner	Cards/ Master
78935	9003LL/BP	1	6	48
13993	9004LL/BP	1	6	48
45866	9005XSLL/BP	1	6	48
45868	9006XSLL/BP	1	6	48
78639	9007LL/BP	1	6	48
12777	H1-LL	1	-	300
78640	H7-55LL/BP	1	6	48
89255	H11-55LL/BP	1	6	48
19411	H5051	1	-	6
19412	H5062	1	-	6
19428	H5024	1	-	6
19429	H5054	1	-	6

**Long Life lamps last up to 2-6x longer when compared to standard GE halogen lamps.

Standard Replacement Sealed Beam Lamps

Product Code	Lamp Description	Product Code	Lamp Description	Product Code	Lamp Description
18511	4000	25114	6006	18525	H6024
24448	4411	18519	6014	28153	H6024NH*
24454	4412	38416	6015	18534	H6054
24460	4412A	18521	6052	14752	H6054HO◊
24478	4414	22386	H4351	25097	H6054NH*
22982	4415	22387	H4352	43576	H7604
24499	4415A	18532	H4656	49695	H7612
24539	4421	14753	H4656HO◊	45058	H7621-1
24572	4434A	18535	H4666	13426	H7921-1
18517	4651	28157	H4666NH*	16484	H9415
18518	4652	18536	H4701	17988	H9415A
24973	4800	18538	H4703	16976	H9420
45110	4912-1	18522	H5001	16482	H9421
45116	4921-1	18523	H5006		

Standard Replacement Headlamps

Product Code	Lamp Description	Product Code	Lamp Description	Product Code	Lamp Description
22432	9003/BP	45866	9005XSLL/BP	27342	H4-75/70
25150	9003NH/BP*	18510	9006/BP	26374	H7-55/BP
18508	9004/BP	25147	9006NH/BP*	29049	H9 65W BP
25149	9004NH/BP*	45868	9006XSLL/BP	23762	H11-55/BP
18509	9005/BP	22388	9007/BP	80851	D2R UNIT
25148	9005NH/BP*	25146	9007NH/BP*	25088	D2S UNIT
		27334	H4-60/55	78734	D1S UNIT

GE NIGHTHAWK™ PLATINUM

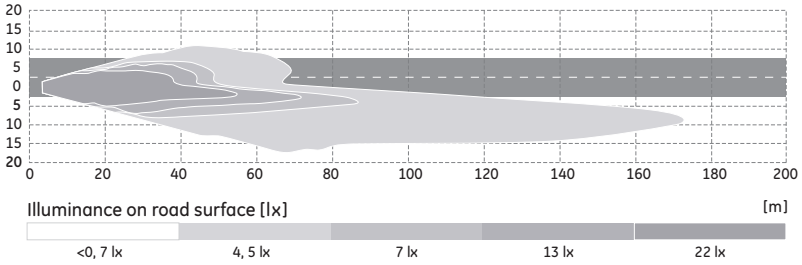

* GE NIGHTHAWK™ halogen lamps focus more light in an area illuminated with more than 15,000 candelas in light intensity compared to a standard halogen headlamp bulb. Specific light levels vary by bulb type and headlamp assembly.

◊ High Output headlamps offer increased light output over standard halogen.

Assortment Architecture Matrix
Assortiment D'ampoules
Surtido De Arquitectura De Matriz

HID Discharge • HID Décharge • HID Descarga

Bulb Type Type d'ampoule Tipo de Lápara	Projection Beam Faisceau de projection Proyección del Haz	Reflector Beam Réflecteur Reflector de Haz	Off Road Only - No Highway Hors route uniquement - Pas sur route Sólo Off Road - Momentos de Peligro
D1S	D1S	-	-
D2R	-	D2R	-
D2S	D2S	-	D2SBlue & D2S Superblue

Halogen Composite • Halogéne Composit • Halógeno Compuesto

Bulb Type Type D'ampoule Tipo De Lápara	Long Life La Fiabilité Fiabilidad	GE NIGHTHAWK™	GE NIGHTHAWK™ SPORT	GE NIGHTHAWK™ PLATINUM	GE NIGHTHAWK™ XENON
9003	9003LL	903NH	9003NHS	9003NHP	9003NHX
9004	9004LL	9004NH	9004NHS	9004NHP	_
9005	9005LL	9005NH	9005NHS	9005NHP	9005NHX
9006	9006LL	9006NH	9006NHS	9006NHP	9006NHX
9007	9007LL	9007NH	9007NHS	9007NHP	9007NHX
9005XS	9005XSLL	-	-	-	-
9006XS	9006XSLL	-	-	-	-
H1-55	-	H1-55NH	-	H1-55NHP	H1-55NHX
H4-60	-	H4-60NH	-	H4-60NHP	H4-60NHX
H7-55	H7-55LL	H7-55NH	H7-55NHS	H7-55NHP	H7-55NHX
H11-55	H11-55LL	H11-55NH	H11-55NHS	H11-55NHP	H11-55NHX
H13 (9008)	_	H13NH	H13NHS	H13NHP	_

Halogen Sealed Beam • Halogéne Faisceau Scelle • Halógeno Sellado Rayo

Bulb Type Type D'ampoule Tipo De Lápara	Long Life La Fiabilité Fiabilidad	GE NIGHTHAWK™	GE NIGHTHAWK™ SPORT
H4656, H4656LL, H4740, 4652, HP4656	H4656LL	H4656NH	H4656NHS
H6054, H6054LL, H6059, 6052, 6053, HP6054, H5054	H6054LL	H6054NH	H6054NHS
H4666 HP4666, H6545, HP6545	-	H4666NH	H4666NHS
H6024, H6026LL, 6014, 6015, 6016	H6024LL	H6024NH	H6024NHS
4651, H4651, H5051?	H5051	-	-
4652, H4656, H4662, 4739, H5062?, H5024?	H5062	-	-
6012, 6014, 6015, 6016, 6017, H6024, H6026	H5024	-	-
6052, 6053, H6054	H5054	-	-

Assortment Architecture Matrix
Assortiment D'ampoules
Surtido De Arquitectura De Matriz

Miniature • Miniature • Miniatura

Lamp	Standard OEM Standard OEM Estándar OEM		Long Life La fiabilité Fiabilidad		GE NIGHTHAWK™		Popular Applications
	Product Code	Lamp Description	Product Code	Lamp Description	Product Code	Lamp Description	
67	25652	67	-	-	71895	67 NH/BP2	License, Cargo • Plaque, Cargo • Licencia, de Carga
89	12363	89/BP2	47797	89LL/BP2	-	-	Instrument, License, Step/Courtesy, Underhood • Instrument, Plaque, Pied/Courtoisie, Sous le Capot • Instrumento, de Licencia, Paso/Coresía, Debajo del Capó
93	25811	93	-	-	71904	93 NH/BP2	Underhood, Backup • Sous le Capot, Backup • Bajo el Capó, de Copia de Seguridad
161	23016	161/BP2	-	-	71902	161 NH/BP2	Instrument • Instrument • Instrumento
168	12327	168/BP2	47827	168LL/BP2	89239	168NH/BP2	License, Courtesy, Map, Cargo, High Mount Stop • Plaque de Courtoisie, Carte, Cargo, Haute Arrétez le Mont • Licencia, de Cortesía, Mapa, de Cargo, Alta Detener el Monte
194	12328	194/BP2	25832	194LL/BP2	89240	194NH/BP2	Instrument, License, Dome, Sidemarker • Instrument, Licnce, Dome, Sidemarker • Instrumento, Licencia, Cúpula, Sidemarker
194NA	12319	194NA/BP2	47794	194NA/LL/BP2	71894	194NA NH/BP2	Front Sidemarker • Sidemarker Avant • Sidemarker Frente
211-2	12673	211-2/BP2	-	-	71900	211-2 NH/BP2	Cargo, Trunk, Dome • Cargo, Tranc, Dome • De Carga, del Tranco, la Cúpula
912	12365	912/BP2	-	-	89242	912NH/BP2	Dome, High Mount Stop, Cargo • Dome, Butée Haute Montagne, Cargo • Dome, Parada de Alta Montaña, de Carga
921	12307	921/BP2	-	-	89238	921NH/BP2	Backup, High Mount Stop, Cargo • Sauvegarde, Butée Haute Montagne, Cargo • Copia de Seguridad, Parada de Alta Montaña, de Carga
922	23027	922/BP2	-	-	71903	922 NH/BP2	High Mount Stop, Courtesy • Butée Haute Montagne, Courtoisie • Parada de Alta Montaña, Cortesía
1003	12367	1003/BP2	47800	1003LL/BP2	-	-	License, Underhood • Plaque, Sous le Capot • Licencia, Debajo del Capó
1073	26838	1073	-	-	71905	1073 NH/BP2	Directional, Stop and Backup • Directionnel, Stop et de Sauvegarde • Deje de Dirección y Copia de Seguridad
1141	12346	1141/BP2	47802	1141LL/BP2	71897	1141 NH/BP2	Directional, Stop and Backup • Directionnel, Stop et de Sauvegarde • Deje de Dirección y Copia de Seguridad
1154	12297	1154/BP2	-	-	71889	1154NH/BP2	Directional, Stop and Tail Lamp • Directionnel, Stop et de Sauvegarde, et Feux Arrié • Deje de Dirección, Copia de Seguridad, Luces Traseras
1156	12344	1156/BP2	23334	1156LL/BP2	89241	1156NH/BP2	Directional, Stop and Backup • Directionnel, Stop et de Sauvegarde • Deje de Dirección y Copia de Seguridad
1157	12294	1157/BP2	23337	1157LL/BP2	89236	1157NH/BP2	Directional, Stop and Tail Lamp • Directionnel, Stop et de Sauvegarde, et Feux Arrié • Deje de Dirección, Copia de Seguridad, Luces Traseras
1157NA	12310	1157NA/BP2	47798	1157NALL/BP2	71891	1157NA NH/BP2	Directional, Parking Lamp • Directionnel, Feu de Stationnement • Direccionales, Luz de Estacionamiento
1895	12330	1895/BP2	-	-	71896	1895 NH/BP2	Instrument, Sidemarker • Instrument, Sidemarker • Instrumento, Sidemarker
2057	12296	2057/BP2	23339	2057 LL/BP2	89237	2057NH/BP2	Directional, Stop and Tail Lamp • Directionnel, Stop et de Sauvegarde, et Feux Arrié • Deje de Dirección, Copia de Seguridad, Luces Traseras
2057NA	12312	2057NA/BP2	47799	2057NALL/BP2	71892	2057NA NH/BP2	Directional, Parking Lamp • Directionnel, Feu de Stationnement • Direccionales, Luz de Estacionamiento
2357	12298	2357/BP2	-	-	71890	2357NH/BP2	Directional, Stop and Tail Lamp • Directionnel, Stop et de Sauvegarde, et Feux Arrié • Deje de Dirección, Copia de Seguridad, Luces Traseras
3057	12305	3057/BP2	26378	3057LL/BP2	89243	3057NH/BP2	Directional, Stop and Tail Lamp • Directionnel, Stop et de Sauvegarde, et Feux Arrié • Deje de Dirección, Copia de Seguridad, Luces Traseras
3156	12351	3156/BP2	27565	3156LL/BP2	71898	3156 NH/BP2	Backup, Cornering, Directional • Directionnel, Sauvegarde, les Virages • Copia de Seguridad, en Curvas, Direccional
3157	12306	3157/BP2	26377	3157LL/BP2	89244	3157NH/BP2	Directional, Stop and Tail Lamp • Directionnel, Stop et de Sauvegarde, et Feux Arrié • Deje de Dirección, Copia de Seguridad, Luces Traseras
3157NA	12314	3157NA/BP2	26380	3157NA/LL/BP2	71893	3157NA NH/BP2	Directional, Parking Lamp • Directionnel, Feu de Stationnement, Avant Sidemarker • Direccionales, Luz de Estacionamiento, Frente Sidemarker
3457	14387	3457/BP2	26379	3457/LL/BP2	71901	3457 NH/BP2	Directional, Stop and Tail Lamp • Directionnel, Stop et de Sauvegarde, et Feux Arrié • Deje de Dirección, Copia de Seguridad, Luces Traseras
4157			15657	4157LL/BP2	-	-	Directional, Stop and Tail Lamp • Directionnel, Stop et de Sauvegarde, et Feux Arrié • Deje de Dirección, Copia de Seguridad, Luces Traseras
4157NA	-	-	47458	4157NA/LL/BP2	-	-	Directional, Parking Lamp • Directionnel, Feu de Stationnement • Direccionales, Luz de Estacionamiento
7443	26201	7443/BP2	-	-	89248	7443NH/BP2	Directional, Stop and Tail Lamp • Directionnel, Stop et de Sauvegarde, et Feux Arrié • Deje de Dirección, Copia de Seguridad, Luces Traseras
DE3175	12354	DE3175/BP2	-	-	89245	DE3175NH/BP2	Dome, Courtesy • Dome, Courtoisie • Dome, Cortesía
P21W	23306	P21W/BP2	-	-	89247	P21W NH/BP2	Directional, Stop and Backup • Directionnel, Stop et de Sauvegarde • Deje de Dirección y Copia de Seguridad
P21/5W	23303	P21/5W/BP2	-	-	89246	P21/5W NH/BP2	Directional, Stop and Tail Lamp • Directionnel, Stop et de Sauvegarde, et Feux Arrié • Deje de Dirección, Copia de Seguridad, Luces Traseras

Cross Reference Tables
Tableau de Renvoi
Referencias Cruzadas

Headlamps
Phares - Raros

GE	OSRAM	PHILIPS	WAGNER
H1-55	H1	H1-55W	1255/H1
H7-55	H7	H7-55W	1255/H7
H9-65	H9W	H9-65W	1265/H9
H11-55	H11	H11	1255/H11
H13	H13 (9008)	H13 (9008)	9008
4000	4000	4000	4000
4001	5001	5001	5001
4040	4040	4040	4040
H4351	H4351	H4351	H4351
H4352	H4352	H4352	H4352
4651	4651	4651	4651
H4651	H4651	H4651	H4651
H4651	H4651	H4651	HP4651
4652	4652	4652	4652
H4656	H4656	H4656	H4656
H4656	H4656	H4656	HP4656
H4666	H4666	H4666	H6545
H4666	H4666	H4666	HP6545
H4701	H4701	H4701	H4701
H4703	H4703	H4703	H4703
H5001	H5001	H5001	H5001
H5006	H5006	H5006	H5006
H5024	-	H6017LL	H6024LL
H5054	H6054LL	H6054LL	H6054LL
6006	6006	6006	6006
6014	6014	6014	6014
6015	6015	6015	6015
H6024	H6024	H6017	H6024
6052	6052	6052	6052
H6054	H6054	H6054	H6054
H6054	H6054	H6054	HP6054
9003	9003	9003	9003
9004	9004	9004	9004
9004LL	9004LL	9004LL	9004LL
9005	9005	9005	9005
9005LL	9005	9005LL	9005LL
9005XSLL	9005XS	9005XS	9005XS
9005XSLL	9005XS	9005XSLL	9005XS
9006	9006	9006	9006
9006HO	9006LL	9006LL	9006LL
9006XSLL	9006XS	9006XS	9006XS
9006XSLL	9006XS	9006XSLL	9006XSLL
9007	9007	9007	9007
9007LL	9007LL	9007LL	9007LL
9011	-	9011	9011
9012	-	-	-

Miniature Lamps
Ampoules Miniatures -Lámparas En Miniatura

GE	OSRAM	PHILIPS	WAGNER
12	12	12	12
24	24	24	24
24NA	24NA	24NA	24NA
37	37	37	37
53	53	53	53
57	57	57	57
67	67	67	67
68	68	68	68
70	70	70	70
73	73	73	73
74	74	74	74
89	89	89	89
90	90	90	90
93	93	93	93
94	94	94	94
97	97	97	97
98	98	98	98
105	105	105	105
158	158	194	158
161	161	161	161
168	168	168	168
193	193	193	193
194	194	194	194
194B	194B	194B	194B
194G	194G	194G	194G
194NA	194NA	194NA	194NA
194NALL	194NALL	194NALL	194NALL
194R	194R	194R	194R
198	1157	198	198
199	199	199	199
211-2	211-2	211-2	211-2
212-2	212-2	212-2	212-2
214-2	214-2	214-2	214-2
293	293	293	293
330	330	-	330
558	-	558	558
561	561	561	561
562	562	562	562
563	563	563	563
570	570	570	-
577	577	577	-
631	631	631	631
658	658	658	658
756	756	-	756
880	880	880	880
880LL	880	880	880
881	881	881	881
881LL	881	881	881
882	882	882	882
885	885	885	885
886	886	886	886

For the most up-to-date product information, see www.gelighting.com.

Cross Reference Tables
Tableau de Renvoi
Referencias Cruzadas

Miniature Lamps
Ampoules Miniatures -Lámparas En Miniatura

GE	OSRAM	PHILIPS	WAGNER
889	889	889	889
890	890	890	890
891	891	891	891
892	892	892	-
893	893	893	893
894	894	894	894
896	896	896	896
898	898	898	898
899	899	899	899
904	904	904	904
906	906	906	906
912	912	912	912
916	916	916	916
916NA	916NA	916NA	916NA
917	917	912	917
920	920	920	917
921	921	921	921
922	922	922	922
1003	1003	1003	1003
1004	1004	1004	1004
1034	1034	1157	1034
1073	1073	1156	1073
1141	1141	1141	1141
1142	1142	1142	1142
1155	1155	1155	1155
1156	1156	1156	1156
1156NA	1156A	1156NA	1156NA
1157	1157	1157	1157
1157NA	1157A	1157NA	1157NA
1295NA	1295NA	1295NA	1295NA
1445	1445	1445	1445
1815	1815	1815	1815
1816	1816	1816	1816
1889	1889	1889	1889
1891	1891	1891	1891
1892	1892	1892	1892
1893	1893	1893	1893
1895	1895	1895	1895
2040	2040	2040	2040
2057	2057	2057	2057
2057NA	2057A	2057NA	2057NA
2357	2357	2357	2357
2357NA	2357A	2357NA	2357NA
2396	2396	2396	2396
2397	2397	2397	2397
3057	3057	3057	3057
3057LL	3057LL	3057LL	3057LL
3057NA	3057A	3057NA	3057NA
3155	3155LL	3155	3155
3156	3156	3156	3156

Miniature Lamps
Ampoules Miniatures -Lámparas En Miniatura

GE	OSRAM	PHILIPS	WAGNER
3156LL	3156LL	3156LL	3156LL
3157	3157	3157	3157
3157LL	3157LL	3157LL	3157LL
3157NA	3157A	3157NA	3157NA
3157NALL	3157NALL	3157NALL	3157NALL
3457	3357	3457	3357
3457LL	3357LL	3457LL	3357LL
3457LL	3457LL	3457LL	3457LL
3457NA	3357NA	3457NA	3357NA
3457NA	3457ALL	3457NALL	3457NALL
3496	3496	3496	3496
3497	3497	3497	3497
3652	3652	-	3652
4157LL	4157LL	4157LL	4157LL
4157NALL	4157NALL	4157NALL	4157NALL
7440	7440	7440	7440
7443	7443	7443	7443
9145	9145	9145BP	9145
56110	64115	-	47835
58540	64111	12023	47830
C5W	6418	12844	11005
DE3021	DE3021	12818	11006
DE3022	DE3022	12818	13050
DE3175	DE3175	DE3175	12100
DE3425	DE3425	12854	11004
DE757	66411	12866	17314
H1-55	H1-64150	H1-55W	BP1255/H1
H2-55	H2-64173	H2-55W	BP1255/H2
H3-55	H3-64151	H3-55W	BP1255/H3
H3-100	H3-64153	12455	BP1210/H3
H4-60/55	H4-64193	12342	BP1260/H4
H4-75/70	H4-64196	13342	BP2475/H4
H7-55	H7-64210	H7-55W	BP1255/H7
H8-35	H8-35W	H8-35W	BP1235/H8
H9-65	H9-65W	H9-65W	BP1265/H9
H11-55	H11-55W	H11-55W	BP1255/H11
P21W	7506	12498	17635
P21WLL	7506	LL12498LL	
P21/4W	7225	12594	17881
P21/5W	7528	12499	17916
P21/5W LL	7528LL	-	-
PC168	-	PC168	-
PC194	-	PC194	PC194
PY21W	7507A	12496	17638NA
R5W	5007	12821	17171
R5WLL	5007LL	-	-
R10W	5008	12814	17311
T4W	3893	12929	17131
W3W	2821	12256	17097
W5W	2825	12961	17177

Lamp Locator

The lamps listed here are not to scale. To determine the diameter of a bulb in inches, multiply the bulb number by one-eighth. For example T-2 means approximately 2/8" or 1/4" diameter.

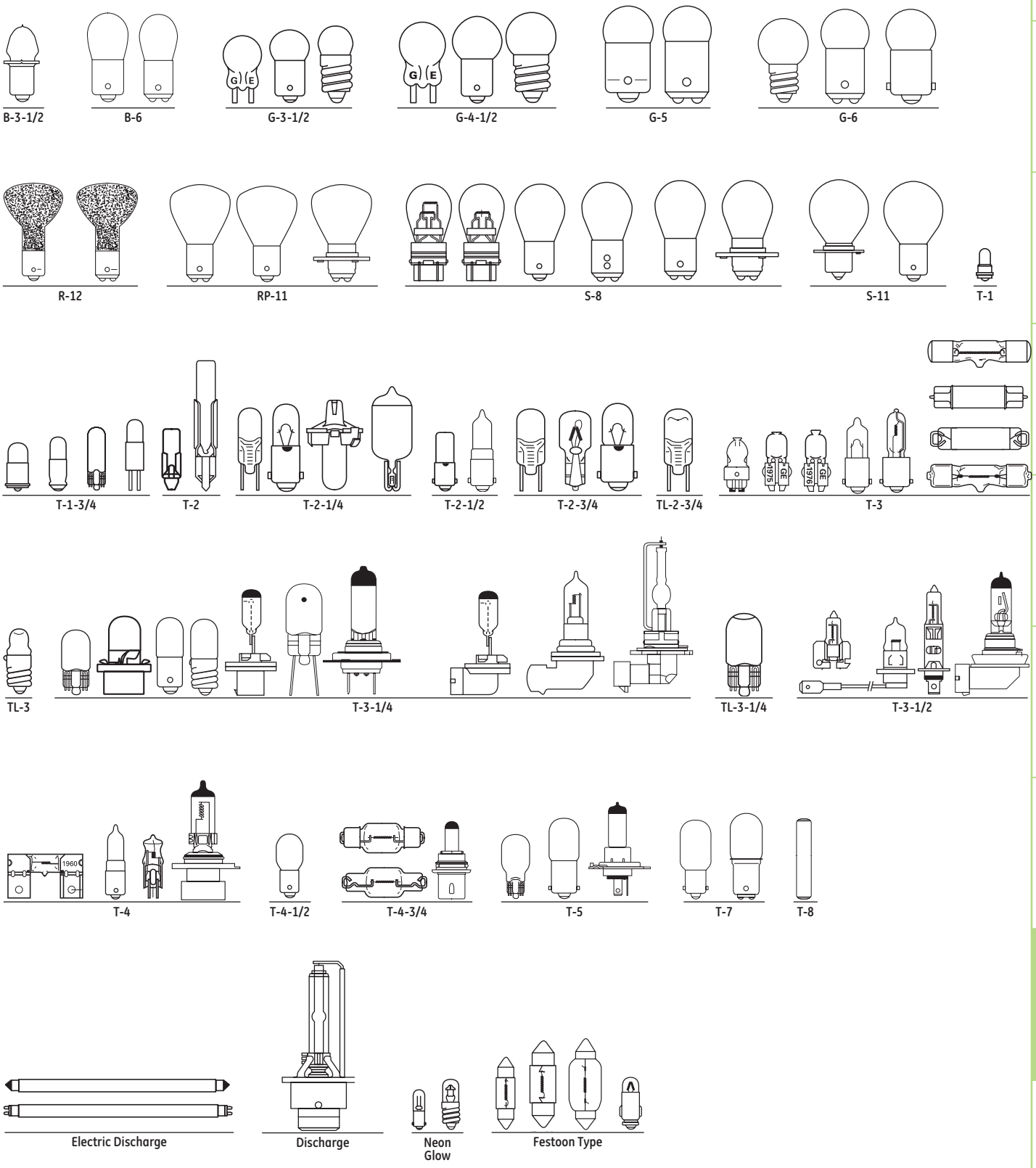

For the most up-to-date product information, see www.gelighting.com.

Miniature Bases

Bases provide electrical contact to the lamp and, in most cases, also support the lamp in the fixture. For miniature and subminiature lamps, bayonet or wedge base types are generally preferred over screw types when vibration is present.

In addition, wedge bases reduce socket size and complexity. Flanged or collared types are usually associated with requirements for filament location.

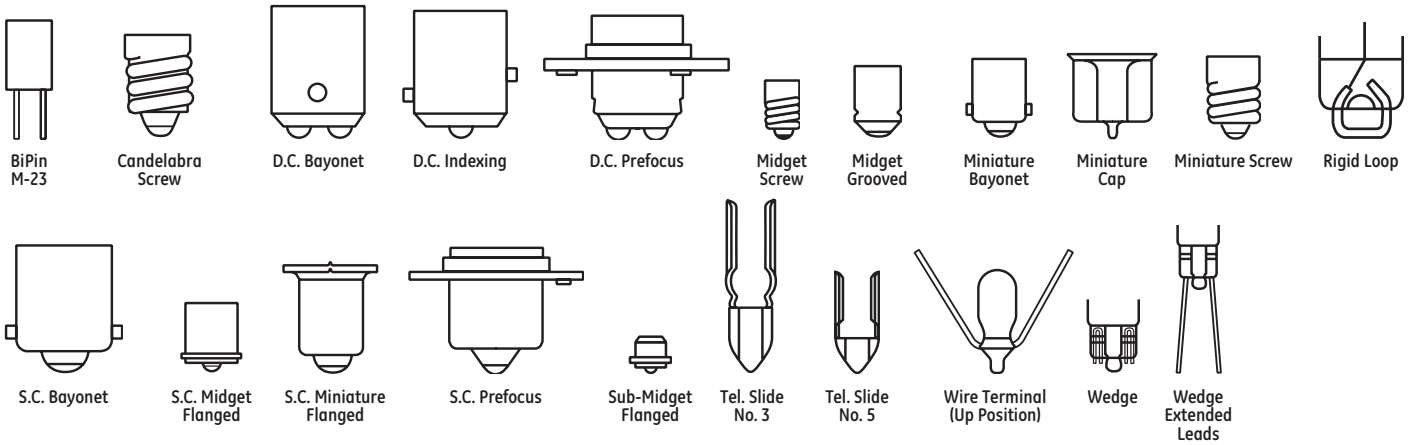

Sealed Beam Lamps

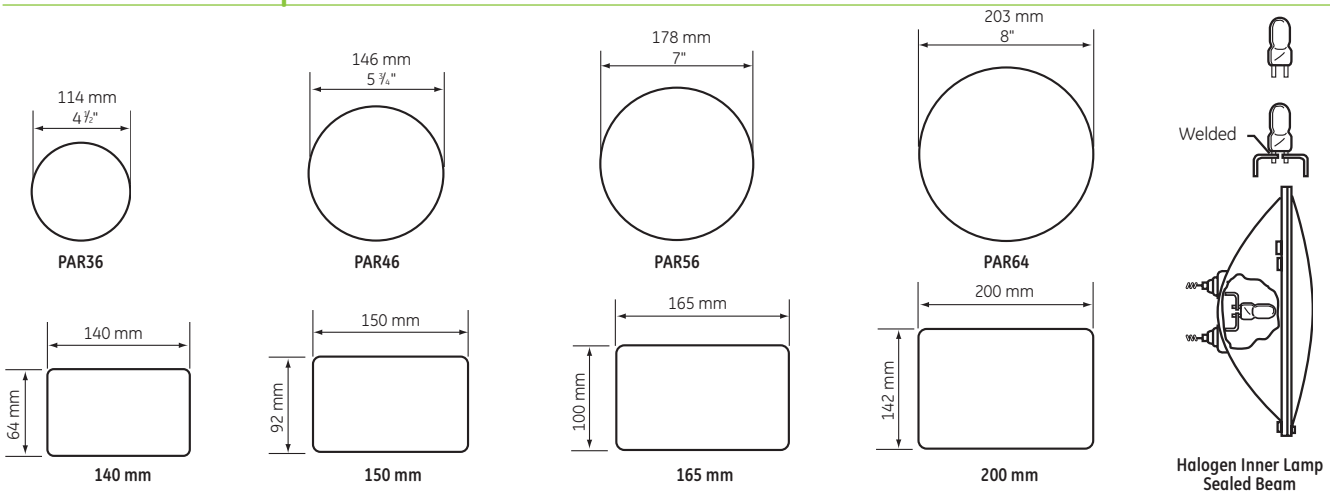

Sealed Beam Bases

Bases provide electrical contact to the lamp. The most common bases for sealed beam lamps are the screw terminal and contact lug types. Other types are also available, as illustrated.

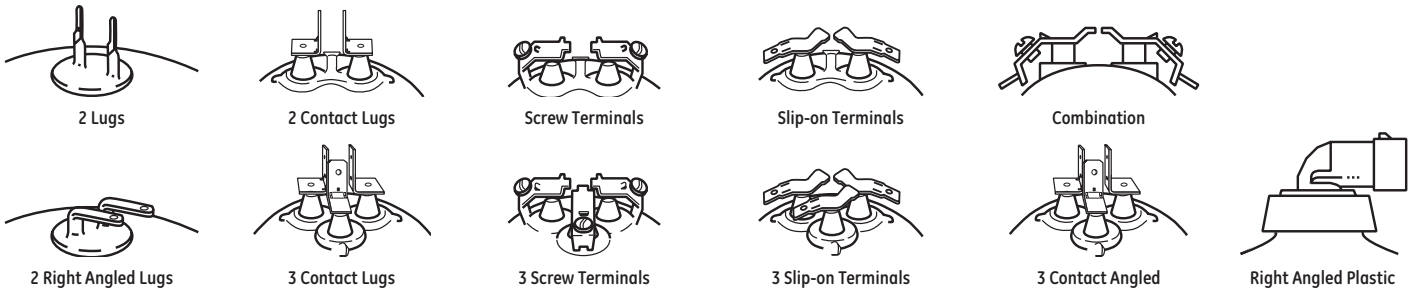

Introduction

GE Miniature and Sealed Beam Product Ordering Information

GE Miniature and Sealed Beam Lamps are designed for those applications requiring specific bulb size, base, and voltage. These lamps are operated on vehicles (cars, trucks, boats, aircraft, tractors) or in special applications utilizing low voltage sources. Most lamps are designated by common ANSI (American National Standards Institute) lamp numbers and lamps in this section are arranged in numerical order. To assist you in identifying lamps, drawings (not to scale) are provided, along with descriptions of bulb and base sizes.

Specific market segments covered in this section are products used in:

Aircraft	Emergency Building Lighting	Marine
Automotive	Flashlight/Hand Lanterns	Medical/Instruments
Agriculture	Garden/Outdoor	Telephone
CIM/Tractor	Indicator	Toys/Entertainment

For additional specifications refer to the Automotive Lamp Catalog obtained through your GE Sales Office. Automotive Selection Guide also available.

Finding and Ordering a Lamp

Most Miniature Lamps have a number on the base or bulb. Generally it will match the lamp number in this catalog, which is sorted in numeric order (prefixes last). The catalog is divided into Miniature and Sealed Beam sections. Sealed Beam lamps start on page 9-14. Often the first prefix is another lamp manufacturer's identification and can be ignored. You can verify the lamp using the drawings provided. Order codes for Blister, Unit, and Bulk Pack for OEM's are provided.

Formulas

The following are commonly used formulas to assist any calculations you may need. For further information, contact your GE Lamp Representative.

- Watts = Volts x Amps Candlepower
- Lumens = 12.57 x Mean Spherical
- Kelvin = Celsius + 273
- Footcandles = Candlepower/Distance squared (miniature lamps only)
- Hot Resistance (Ohms) = Volts/Amps

Abbreviations

The abbreviations used in this catalog include:

A	Amperes
ANSI	American National Standards Institute
Bay.	Bayonet
D.C.	Double Contact
ECE	European Common Market (European Motor Vehicle Standards)
Flg.	Flanged
HID	High Intensity Discharge
LCL	Light Center Length
Min.	Miniature
MOL	Maximum Overall Length
MSCP	Mean Spherical Candlepower
Nom.	Nominal
C.I.M.	Construction & Industrial Machinery
C.P.	Candlepower
Cand.	Candelabra
PAR	Parabolic Aluminized Reflector
Pf.	Prefocus
SAE	Society of Automotive Engineers (US Motor Vehicle Standards)
Sc.	Screw
S.C.	Single Contact
Spec.	Special
Tel.	Telephone
Term.	Terminals
V	Volts
W	Watts

GE Miniature Lamp Prefixes

DE	Double-Ended
H	Halogen
K	Krypton Gas
PC	Printed Circuit Application
PR	Prefocus Base (e.g., "Flashlight Lamp")
Q	Quartz Halogen
W,T,R, C,P	European Designation
D2	Discharge

GE Miniature Lamp Suffixes

A	Amber
AF	All Frost (on outside)
AS15	Ages and Selected to 15% (for candlepower)
B	Blue
CW	Cool White (aircraft lighting)
E-1	Different lead wire material (NI plated)
G	Green
HD	Heavy Duty
HO	High Output
LL	Long Life
NH	Nighthawk™
NHS	Nighthawk™ Sport
NA	Natural Amber (automotive lighting)
PSB	Pilot Indicator/ Short Base
R	Red
SB	Silver Bowl (all or some portion of bulb is silver). Also blue halogen.
TY	Letters after a quartz halogen lamp mean a deviation from the standard lamp – usually refers to the electrical terminals
WW	Warm White (aircraft lighting)
X	Indicates some arbitrary deviation from the normal product
Y	Yellow
-1	Slip-on terminals
-2	Represents various deviations
-3	Represents deviations (e.g. combination terminal)
W	European Designation (Watts)

Headings in this catalog section

The following terms and descriptions can help you when checking Halogen lamp specifications and when ordering products. Within each product line, lamps are divided into families. Within families, lamps are listed by wattage. In each of these groups, lamps are listed alphabetically by bulb shape.

GE Lamp No.: In nearly all cases lamps are marked with a General Electric Trade Number recorded with the ANSI. See glossary of prefixes and suffixes on page 8-21.

Order Code: Use this code when ordering to ensure that you receive the exact product you require.

Case Qty: Quantity of lamps per case if blister pack (BP), unit, or bulk (OEM's).*

Primary Application: Current uses of the lamp in general. Lamps are used in other applications than listed.

Volts: Voltage at which the lamp is designed to provide the amperes, candlepower, and laboratory life characteristics.

Amps or Watts: Energy used expressed as amperes (A) or watts (W) at design voltage.

MSCP/MBCP: Approximate output expressed as initial mean spherical candlepower (see lumen conversion). For Sealed Beam MBCP is the maximum intensity of the beam in candelas, generally in the beam's center, and spread is beam size expressed in degrees.

Bulb: The prefix letter describes the shape and the number is the approximate bulb diameter.

Base: Base types are depicted on the previous pages for both Miniature and Sealed Beam.

Filament Design: C = coiled, CC = coiled coil, -6 = horizontal, -8 = vertical to base. See Miniature and Sealed Beam Catalog for all variations.

LCL (in): Distance in inches between base reference plane and filament center.

MOL (in): In inches from the top of the bulb to the bottom of the base.

Rated Life (hrs): Lamp burning hours to medium life expectancy.

Footnotes, Warning and Caution Notices: See page 8-34 for explanation.

Order Code			Case Qty														
Blister	Unit	Bulk	BP	Unit	Bulk	GE Lamp No.	Primary Application	Volts	Amps (A) or Watts (W)	MSCP	Bulb	Base	Filament	LCL (in)	MOL (in)	Rated Life (hrs)	Footnotes, Warning and Caution Notices
12325	17853		48	50		24	Auto Sidemarker	14.0	.24A	2.0	T2 3/4	Wedge (W2.1x9.5d)	C-2V	0.46	0.91	1500	

T-2 is Tubular approximately 2/8" in diameter. Sealed Beam bulb sizes are also in eighths of an inch if round (PAR). PAR36 is 36/8" or 4-1/2" in diameter. If the Sealed Beam is rectangular in shape the longest side is measured in millimeters. A 165mm Sealed Beam measures 6-1/2" (165mm) across the top.

T 2-3/4

Identifies the shape (S=Pear, T=Tubular, G=Globe, R=Reflector)

Identifies the approximate bulb diameter in eighths of an inch.

*Miniature Incandescent BP is 2 lamps, Miniature Halogen BP is 1 lamp, selected miniature headlamps available in 2 pack BP; PC not shown.

Miniature Lamps

Order Code			Case Qty														
Blister	Unit	Bulk	BP	Unit	Bulk	GE Lamp No.	Primary Application	Volts	Amps (A) or Watts (W)	MSCP	Bulb	Base	Filament	LCL (in)	MOL (in)	Rated Life (hrs)	Footnotes, Warning and Caution Notices
12325	17853		48	50		24	Auto Sidemarker	14.0	.24A	2.0	T2 3/4	Wedge (W2.1x9.5d)	C-2V	0.46	0.91	1500	
12316			48			24NA	Auto Sidemarker	14.0	.24A	1.5	T2 3/4	Wedge (W2.1x9.5d)	C-2V	0.46	0.91	1500	
26480	39220	17460	48	50	4000	37	Auto	14.0	.09A	0.5	T1 3/4	Wedge (W2.1x9.5d)	C-2F	0.40	0.80	2500	
	25450			50		44	Indicator	6.3	.25A	0.9	T3 1/4	Miniature Bayonet (Ba9s)	C-2R	0.78	1.19	3000	
	25485			50		47	Indicator	6.3	.15A	0.5	T3 1/4	Miniature Bayonet (Ba9s)	C-2R	0.78	1.19	3000	
	25550	25552		50	4000	53	Auto and Indicator	14.4	.12A	1.0	G3 1/2	Miniature Bayonet (Ba9s)	C-2V	0.50	0.94	1000	
23218	25591		48	50		57	Auto and Instrument	14.0	.24A	2.0	G4 1/2	Miniature Bayonet (Ba9s)	C-2V	0.56	1.07	500	
12324	25652	25654	48	50	1000	67	Auto	13.5	.59A	4.0	G6	Single Contact Bayonet (BA15s)	C-2R	0.81	1.44	5000	4
71895			48			67NH	Auto, Nighthawk™	13.5	.59A	4.0	G6	Single Contact Bayonet (BA15s)	C-2R	0.81	1.44		
	25692			50		68	Auto and Marine	13.5	.59A	4.0	G6	Double Contact Bayonet (BA15d)	C-2R	0.81	1.44	5000	4
23015		28770	48		4000	73	Indicator	14.0	.08A	0.3	T1 3/4	Wedge (W2.1x9.5d)	C-2F	0.40	0.80	15000	79
21029	38457	38458	48	50	4000	74	Auto	14.0	.10A	0.7	T1 3/4	Wedge (W2.1x9.5d)	C-2F	0.40	0.80	1000	
	40969			50		85	Indicator	28.0	.04A	0.3	T1 3/4	Wedge (W2.1x9.5d)	C-2F	0.40	0.80	7000	79
	25772			10		88	Indicator	6.8	1.91A	15.0	S8	Double Contact Bayonet (BA15d)	C-6	1.12	2.00	300	
12363	25778		48	50		89	Auto	13.0	.58A	6.0	G6	Single Contact Bayonet (BA15s)	C-2R	0.75	1.44	750	
47797			48			89 LL	Auto, Long Life	13.0	.58A	6.0	G6	Single Contact Bayonet (BA15s)	C-2R	0.75	1.44	1500	
12364	25794	25796	48	50	1000	90	Auto and Marine	13.0	.58A	6.0	G6	Double Contact Bayonet (BA15d)	C-2R	0.75	1.44	750	
23217	25811	17461	48	50	500	93	Auto	12.8	1.04A	15.0	S8	Single Contact Bayonet (BA15s)	C-6	1.12	2.00	700	
71904			48			93NH	Auto, Nighthawk™	12.8	1.04A	15.0	S8	Single Contact Bayonet (BA15s)	C-6	1.12	2.00		
00764	25829		48	50		94	Auto and Marine	12.8	1.04A	15.0	S8	Double Contact Bayonet (BA15d)	C-6	1.12	2.00	700	
12322	25836	25838	48	50	1000	97	Auto	13.5	.69A	4.0	G6	Single Contact Bayonet (BA15s)	C-2V	0.81	1.44	5000	4
	16287			50		98	Auto	13.0	.62A	6.0	G6	Single Contact Bayonet (BA15s)	C-2V	0.75	1.44	800	
	36147			50		105	Auto	12.8	1.0A	12.0	B6	Single Contact Bayonet (BA15s)	C-6	1.06	1.75	500	
	25931			50		158	Auto Instrument	14.0	.24A	2.0	T3 1/4	Wedge (W2.1x9.5d)	C-2V	0.56	1.06	500	
23016	25956	16489	48	50	4000	161	Auto Instrument	14.0	.19A	1.0	T3 1/4	Wedge (W2.1x9.5d)	C-2F	0.56	1.06	4000	
71902			48			161 NH	Auto, Nighthawk™	14.0	.19A	1.0	T3 1/4	Wedge (W2.1x9.5d)	C-2F	0.56	1.06		
12327	25962	28757	48	50	4000	168	Auto Instrument	14.0	.35A	3.0	T3 1/4	Wedge (W2.1x9.5d)	C-2F	0.56	1.06	1500	
47827			48			168 LL	Auto, Long Life	14.0	.35A	3.0	T3 1/4	Wedge (W2.1x9.5d)	C-2F	0.56	1.06	3000	
89239			48			168 NH	Auto, Nighthawk™	14.0	.35A	3.0	T3 1/4	Wedge (W2.1x9.5d)	C-2F	0.56	1.06		
	19553	19852		50	4000	193	Truck	14.0	.33A	2.0	T3 1/4	Wedge (W2.1x9.5d)	C-2F	0.56	1.06	15000	
		11807			4000	193E1	Truck Clearance	14.0	.33A	2.0	T3 1/4	Wedge, Wire Terminal (122)	C-2F		1.06	15000	122
12328	25965	28758	48	50	4000	194	Auto	14.0	.27A	2.0	T3 1/4	Wedge (W2.1x9.5d)	C-2F	0.56	1.06	2500	
89240			48			194 NH	Auto, Nighthawk™	14.0	.27A	2.0	T3 1/4	Wedge (W2.1x9.5d)	C-2F	0.56	1.06		
12357			48			194G	Auto, Green	14.0	.27A		T3 1/4	Wedge (W2.1x9.5d)	C-2F		1.06	2500	132

For the most up-to-date product information, see www.gelighting.com.
All footnotes, warning and caution notices found at the end of this section (page 8-34).

Miniature Lamps (continued)

Order Code			Case Qty														
Blister	Unit	Bulk	BP	Unit	Bulk	GE Lamp No.	Primary Application	Volts	Amps (A) or Watts (W)	MSCP	Bulb	Base	Filament	LCL (in)	MOL (in)	Rated Life (hrs)	Footnotes, Warning and Caution Notices
12319	**44859**	**27470**	48	50	4000	**194NA**	Auto Sidemarker	14.0	.27A	1.5	T3 1/4	Wedge (W2.1x9.5d)	C-2F		1.06	2500	
47794			48			**194NA LL**	Auto Amber, Long Life	14.0	.27A	1.5	T3 1/4	Wedge (W2.1x9.5d)	C-2F		1.06	5000	
71894			48			**194NA LL NH**	Auto, Amber, Nighthawk™	14.0	.27A	1.5	T3 1/4	Wedge (W2.1x9.5d)	C-2F		1.06		
12355			48			**194R**	Auto, Red	14.0	.27A	2.0	T3 1/4	Wedge (W2.1x9.5d)	C-2F		1.06	2500	132
25832			48			**194LL**	Auto, Long Life	14.0	.27A	2.0	T3 1/4	Wedge (W2.1x9.5d)	C-2F	0.56	1.06	12000	
00760	**37983**	**37984**	48	50	500	**198**	Truck Stop, Signal	12.8/14.0	2.25/.59A	32.0/3.0	S8	Double Contact Index (BAY15d)	C-6/C-6	1.25	2.00	1200/1500	110,147
	37985	**37986**		50	500	**199**	Truck Stop	12.8	2.25A	32.0	S8	Single Contact Bayonet (BA15s)	C-6	1.25	2.00	1200	110
	25988			50		**210**	Instrument	6.5	1.78A	15.0	B6	Double Contact Bayonet (BA15d)	C-6	1.06	1.75	100	
12673	**39224**	**11803**	48	50	2520	**211-2**	Auto	12.8	.97A	12.0	T3	Miniature Cap	C-8		1.72	1000	
71900			48			**211-2 NH**	Auto, Nighthawk™	12.8	.97A	12.0	T3	Miniature Cap	C-8		1.72		
23220			48			**212-2**	Auto	13.5	.74A	6.0	T3	Miniature Cap	C-8		1.72	2000	4
	39356			50		**214-2**	Auto	13.5	.52A	4.0	T3	Miniature Cap	C-8		1.72	1000	4
	44719			50		**265**	Indicator	28.0	.08A	0.8	G3 1/2	Miniature Bayonet (Ba9s)	C-2F	0.50	0.94	5000	
	81642			50		**301**	Aircraft	28.0	.17A	3.0	G-5	Single Contact Bayonet (BA15s)	C-2F	0.69	1.25	500	
	81641			50		**303**	Aircraft	28.0	.30A	6.0	G-6	Single Contact Bayonet (BA15s)	C-2F	0.75	1.44	500	
	81643			50		**304**	Aircraft	28.0	.30A	6.0	G-6	Double Contact Bayonet (BA15d)	C-2F	0.75	1.44	500	
	26143			50		**305**	Aircraft	28.0	.51A	15.0	S8	Single Contact Bayonet (BA15s)	C-2V	1.12	2.00	300	
	26145			50		**305AF**	Aircraft, Frosted	28.0	.51A		S8	Single Contact Bayonet (BA15s)	C-2V		2.00	300	
	26152			50		**306**	Aircraft	28.0	.51A	15.0	S8	Double Contact Bayonet (BA15d)	C-2V	1.12	2.00	300	
	81644			50		**307**	Aircraft	28.0	.67A	21.0	S-8	Single Contact Bayonet (BA15s)	C-2V	1.12	2.00	300	
	26161			50		**307AF**	Aircraft, Frosted	28.0	.67A	21.0	S8	Single Contact Bayonet (BA15s)	C-2V		2.00	300	
	81645			50		**308**	Aircraft	28.0	.67A	21.0	S8	Double Contact Bayonet (BA15d)	C-2V	1.12	2.00	300	
	81646			50		**308AF**	Aircraft, Frosted	28.0	.67A		S8	Double Contact Bayonet (BA15d)	C-2V		2.00	300	
	26175			10		**309**	Aircraft, Frosted	28.0	.90A	32.0	S11	Single Contact Bayonet (BA15s)	C-2V	1.25	2.38	300	
	81647			10		**311**	Aircraft	28.0	1.29A	50.0	S11	Single Contact Bayonet (BA15s)	C-2V	1.25	2.38	300	
	81649	**81650**		50	4000	**313**	Aircraft	28.0	.17A	3.5	T3 1/4	Miniature Bayonet (Ba9s)	C-2F	0.62	1.19	500	
	81651			50		**315**	Aircraft	28.0	.90A	32.0	S8	Single Contact Bayonet (BA15s)	C-2V	1.12	2.00	300	
	81652			50		**316**	Aircraft	6.0	.70A	3.4	T3 1/4	Miniature Bayonet (Ba9s)	C-2R	0.62	1.19	500	
	80862			10		**317**	Aircraft	28.0	3.50W	2.6	T3	2-Pin (G4)	C-2R	0.78	1.16	1000	
	28519			50		**327**	Aircraft	28.0	.04A	0.3	T1 3/4	Single Contact Midget Flanged	C-2F	0.38	0.63	4000	79
	28546			50		**328**	Aircraft	6.0	.20A	0.3	T1 3/4	Single Contact Midget Flanged	C-2R	0.38	0.63	1000	10
	28567			50		**330**	Aircraft	14.0	.08A	0.5	T1 3/4	Single Contact Midget Flanged	C-2F	0.38	0.63	1500	
	28588			50		**334**	Aircraft	28.0	.04A	0.3	T1 3/4	Midget Grooved	C-2F	0.38	0.63	4000	79
	26255			50		**356**	Aircraft	28.0	.17A	3.5	G3 1/2	Miniature Bayonet (Ba9s)	C-2F	0.50	0.94	500	14
		87381			1000	**380**	Aircraft	6.3	.04A	0.0	T1 3/4	Single Contact Midget Flanged	C-2V		0.64	50000	79
	28653			50		**381**	Indicator	6.3	.20A	0.4	T1 3/4	Single Contact Midget Flanged	C-2F	0.38	0.63	20000	79
	28657			50		**382**	Indicator	14.0	.08A	0.3	T1 3/4	Single Contact Midget Flanged	C-2F	0.38	0.63	40000	79
	28660			50		**385**	Indicator	28.0	.04A	0.2	T1 3/4	Single Contact Midget Flanged	C-2F	0.44	0.81	10000	78,79
	28662			50		**386**	Indicator	14.0	.08A	0.3	T1 3/4	Midget Grooved	C-2F	0.38	0.63	40000	79
	28664	**25090**		50	1000	**387**	Indicator	28.0	.04A	0.3	T1 3/4	Single Contact Midget Flanged	C-2F	0.38	0.63	7000	
	28672			50		**388**	Indicator	28.0	.04A	0.3	T1 3/4	Midget Grooved	C-2F	0.38	0.63	7000	79
		87398			1000	**394**	Aircraft	12.0	.04A	0.1	T1 3/4	Single Contact Midget Flanged	C-2F		0.64	10000	79
	38918			50		**400**	Aircraft	28.0	.10A	1.6	T3 1/4	Wedge (W2.1x9.5d)	C-2F	0.56	1.06	1000	
	26441			50		**456**	Instrument	28.0	.17A	2.0	G4 1/2	Miniature Bayonet (Ba9s)	C-2F	0.56	1.07	5000	
	39645			50		**464**	Aircraft	28.0	.17A	3.0	T3 1/4	Wedge (W2.1x9.5d)	C-2F	0.56	1.06	1500	
12358	**39746**	**11820**	48	50	2520	**561**	Auto	12.8	.97A	12.0	T3	Rigid Loop	C-8		1.72	1000	
23019			48			**562**	Auto	13.5	.74A	6.0	T3	Rigid Loop	C-8		1.72	2000	4
		11825			1000	**563**	Auto	13.5	.52A	4.0	T3	Rigid Loop	C-8		1.72	1000	4
	18442			50		**590**	Strip Lighting	13.5	.37A	4.0	T3 1/4	Wedge (W2.1x9.5d)	C-2V	0.50	1.06	2000	
	81653	**81654**		50	1000	**623**	Instrument	28.0	.37A	6.0	G-6	Single Contact Bayonet (BA15s)	2C-2V	0.75	1.44	1000	
23023	**26570**		48	50		**631**	Auto	14.0	.63A	6.0	G6	Single Contact Bayonet (BA15s)	2C-2R	0.75	1.44	1000	
	81670	**81671**		50	4000	**658**	Indicator	14.0	.08A	0.3	T3 1/4	Wedge (W2.1x9.5d)	C-2F	0.56	1.06	15000	79
		87407			1000	**680**	Aircraft	5.0	.06A	0.03	T1	Wire Terminals	C-2R		0.24	100000	79
		87336			1000	**683**	Aircraft	5.0	.06A	0.05	T1	Wire Terminals	C-2R		0.24	100000	79
		87321			1000	**683AS15**	Aircraft	5.0	.06A	0.05	T1	Wire Terminals	C-2R		0.24	100000	79
		28706			1000	**685**	Aircraft	5.0	.06A	0.1	T1 3/4	Sub-Midget Flanged	C-2R	0.19	0.38	40000	79
	43132			50		**705**	Aircraft	28.0	.51A	15.0	S8	Single Contact Bayonet (BA15s)	CC-6	1.12	2.00	900	
		87411			1000	**713**	Aircraft	5.0	.75A	0.09	T1	Wire Terminals	C-2R		0.24	100000	79
		29903			1000	**715**	Aircraft	5.0	.115A	0.15	T1	Wire Terminals	C-2R		0.25	40000	79
		29901			1000	**715AS15**	Aircraft	5.0	.115A	0.15	T1	Wire Terminals	C-2R		0.25	40000	79
		29916			1000	**718**	Aircraft	5.0	.115A	0.15	T1	Sub-Midget Flanged	C-2R		0.36	40000	79
		29905			1000	**718AS15**	Aircraft	5.0	.115A	0.15	T1	Sub-Midget Flanged	C-2R		0.36	40000	79
	26591			50		**755**	Indicator	6.3	.15A	0.3	T3 1/4	Miniature Bayonet (Ba9s)	C-2R	0.78	1.19	20000	79

For the most up-to-date product information, see www.gelighting.com.
All footnotes, warning and caution notices found at the end of this section (page 8-34).

Miniature Lamps (continued)

Order Code			Case Qty			GE Lamp No.	Primary Application	Volts	Amps (A) or Watts (W)	MSCP	Bulb	Base	Filament	LCL (in)	MOL (in)	Rated Life (hrs)	Footnotes, Warning and Caution Notices
Blister	Unit	Bulk	BP	Unit	Bulk												
	26593			50		756	Indicator	14.0	.08A	0.3	T3 1/4	Miniature Bayonet (Ba9s)	C-2F	0.62	1.19	15000	79
	81655			50		757	Indicator	28.0	.08A	0.6	T3 1/4	Miniature Bayonet (Ba9s)	C-2F	0.62	1.19	15000	79
	11014			20		767	Instrument	6.0	2.00A	19.0	T2 1/4	Miniature Bayonet (Ba9s)	C-6	0.56	1.13	50	306
	11250			10		773	Instrument	12.0	.67A	10.0	T2 3/4	2-Pin (G4)	C-6	0.77	1.05	1000	124,306
	12723	12724		10	500	774	Emergency Lighting	12.0	.67A	13.0	T2 1/4	2-Pin (G4)	C-6	0.77	1.00	50	124,306
	49718			10		778	Instrument	6.0	3.33A	32.0	T2 3/4	2-Pin (G4)	C-6	0.77	1.05	100	124,306
	18344			10		780	Strip Lighting	12.0	10.00W	12.0	T2 3/4	2-Pin (G4)	C-6	0.77	1.05	2000	124,306
	44840	44841		10	500	782	Instrument	12.0	1.66A	25.0	T2 3/4	2-Pin (G4)	C-6	0.77	1.05	2000	124,306
	44500	44501		10	500	783	Emergency Lighting	12.0	1.00A	22.0	T2 1/4	2-Pin (G4)	C-6	0.77	1.00	50	124,306
	43760	43761		10	500	784	Emergency Lighting	6.0	1.00A	9.0	T2 1/4	2-Pin (G4)	C-6	0.77	1.00	50	124,306
	43762	43763		10	500	785	Emergency Lighting	6.0	1.33A	13.0	T2 1/4	2-Pin (G4)	C-6	0.77	1.00	50	124,306
	43764	43765		10	500	786	Emergency Lighting	6.0	2.00A	19.0	T2 1/4	2-Pin (G4)	C-6	0.77	1.00	50	124,306
	43115	43116		10	500	787	Instrument	6.0	1.67A	16.0	T2 1/4	2-Pin (G4)	C-6	0.77	1.00	100	124,306
	43117	43118		10	500	788	Instrument	6.0	3.33A	32.0	T2 1/4	2-Pin (G4)	C-6	0.77	1.00	100	124,306
	43119			10		789	Instrument	12.0	1.17A	22.0	T2 3/4	2-Pin (G4)	C-6	0.77	1.05	200	124,306
	43121			10		790	Instrument	14.0	1.79A	42.0	T2 3/4	2-Pin (G4)	C-6	0.77	1.05	200	124,306
	43123	43124		10	500	791	Instrument	14.0	2.50A	61.0	T2 3/4	2-Pin (G4)	C-6	0.77	1.05	200	124,306
	20469			10		795	Signal	12.8	50.00W	108.0	T4	Single Contact Bayonet (BA15s)	C-6	1.25	2.50	200	4,306
	40848	14132		10	540	862	Tractor	12.8	2.93A	60.0	T3 1/4	Right Angle Prefocus (PGJ13)	C-6	1.25	2.68	1900	306
12320		20904	48		540	880	Auto Fog	12.8	2.10A	43.0	T3 1/4	Axial Plastic (PG13)	C-6	1.25	2.68	300	17,160,306
		27582			540	880 LL	Auto Fog, Long Life	12.8	2.10A	43.0	T3 1/4	Axial Plastic (PG13)	C-6	1.25	2.68	1000	17,160,306
25101			12			880 NH	Auto Fog, Nighthawk™	12.8	2.10A	43.0	T3 1/4	Axial Plastic (PG13)	C-6	1.25	2.68		17,160,306
25163			24			880 NH	Auto Fog. Nighthawk™	12.8	2.10A	43.0	T3 1/4	Axial Plastic (PG13)	C-6	1.25	2.68		17,160,306
12334		20905	48		540	881	Auto Fog	12.8	2.10A	43.0	T3 1/4	Right Angle Prefocus (PGJ13)	C-6	1.25	2.68	300	17,160,306
		27583			540	881 LL	Auto Fog, Long Life	12.8	2.10A	43.0	T3 1/4	Right Angle Prefocus (PGJ13)	C-6	1.25	2.68	1000	17,160,306
	13158	13161		10	1000	882	Auto Instrument	12.8	.35A	3.8	T2 1/4	Printed Circuit Socket	C-6	0.37	1.18	2000	306
	18167			10		882X	Auto Instrument	12.8	.35A	3.8	T2 1/4	2-Pin (G4)	C-6	0.77	1.00	2000	124,306
12335		20907	48		540	885	Auto Fog	12.8	3.90A	100.0	T3 1/4	Axial Plastic (PG13)	C-6	1.25	2.68	200	4,306
14689		20909	48		540	886	Auto Fog	12.8	3.90A	100.0	T3 1/4	Right Angle Prefocus (PGJ13)	C-6	1.25	2.68	200	4,306
		25639			540	887	Tractor Work Light	12.8	3.90A	95.0	T3 1/4	Axial Plastic (PG13)	C-6	1.25	2.68	400	4,306
		25703			540	888	Tractor Work Light	12.8	3.90A	95.0	T3 1/4	Right Angle Prefocus (PGJ13)	C-6	1.25	2.68	400	4,306
12336		20910	48		540	889	Auto Signal	12.8	2.10A	43.0	T3 1/4	Right Angle Prefocus (PGJ13)	C-6	1.00	2.68	300	306
12337		20911	48		540	890	Auto Signal	12.8	2.10A	43.0	T3 1/4	Axial Plastic (PG13)	C-6	1.00	2.68	300	306
12308	15246	15248	48	10	500	891	Auto Stop	12.8	.63A	11.0	T2 1/4	2-Pin (G4)	C-6	0.77	1.00	500	124,306
12338		20913	48		540	893	Auto Fog	12.8	2.93A	75.0	T3 1/4	Axial Plastic (PG13)	C-6	1.25	2.68	200	4,17,160,306
		89115			540	893CL	Tractor	12.8	2.93A	75.0	T3 1/4	Axial Plastic (PG13)	C-6	1.25	2.68	200	4,160,306
25172			24			893 NH	Auto Fog, Nighthawk™	12.8	2.93A	75.0	T3 1/4	Axial Plastic (PG13)	C-6	1.25	2.68		4,17,160,306
25102			12			893 NH	Auto Fog, Nighthawk™	12.8	2.93A	75.0	T3 1/4	Axial Plastic (PG13)	C-6	1.25	2.68		4,17,160,306
22112	20238	18455	48	10	540	894	Tractor	12.8	2.93A	75.0	T3 1/4	Right Angle Prefocus (PGJ13)	C-6	1.25	2.68	200	4,306
22113		20914	48		540	896	Auto Fog	12.8	2.93A	75.0	T3 1/4	Right Angle Prefocus (PGJ13)	C-6	1.25	2.68	200	4,17,160,306
98093		12271	48		540	898	Auto Fog	12.8	2.93A	60.0	T3 1/4	Right Angle Prefocus (PGJ13)	C-6	1.25	2.68	1900	4,17,160,306
22111		12272	48		540	899	Auto Fog	12.8	2.93A	60.0	T3 1/4	Axial Plastic (PG13)	C-6	1.25	2.68	1900	4,17,160,306
14273			48			901	Garden	12.8	.31A	2.9	T5	Wedge (W2.1x9.5d)	C-2R	0.81	1.49	500	
23024	40462	40463	48	50	1000	904	Auto	13.5	.69A	4.0	T5	Wedge (W2.1x9.5d)	C-2F	0.81	1.49	5000	4
12366	40289	28763	48	50	1000	906	Auto	13.0	.69A	6.0	T5	Wedge (W2.1x9.5d)	C-2F	0.81	1.49	1000	
	44754	16858		50	1000	908	Emergency Lighting	6.0	1.50A	12.0	T5	Wedge (W2.1x9.5d)	C-2R	0.81	1.49	50	
	44756	16859		50	1000	909	Emergency Lighting	6.0	.62A	3.0	T5	Wedge (W2.1x9.5d)	C-2R	0.81	1.49	50	
12365	40504	28767	48	50	1000	912	Auto	12.8	1.00A	12.0	T5	Wedge (W2.1x9.5d)	C-2R	0.81	1.49	1000	
67903			48			912 LL	Auto, Long Life	12.8	1.00A	12	T5	Wedge (W2.1x9.5d)	C-2R	0.81	1.49	2000	
89242			48			912 NH	Auto, Nighthawk™	12.8	1.00A	12.0	T5	Wedge (W2.1x9.5d)	C-2R	0.81	1.49		
	44769			50		914	Emergency Lighting	4.0	.90A	3.5	T5	Wedge (W2.1x9.5d)	C-6	0.75	1.49	50	
	44771	44772		50	1000	915	Emergency Lighting	12.0	.75A	11.0	T5	Wedge (W2.1x9.5d)	C-2R	0.81	1.49	50	
23025		28768	48		1000	916	Auto	13.5	.54A	2.0	T5	Wedge (W2.1x9.5d)	C-2F	0.81	1.49	10000	
	21860			50		916NA	Auto, Amber	13.0	.54A	1.5	T5	Wedge (W2.1x9.5d)	C-2F	0.81	1.49	10000	
40179	17837		30	50		918	Garden	12.8	.56A	6.5	T5	Wedge (W2.1x9.5d)	C-2R	0.81	1.49	500	
12307	43374	45752	48	50	1000	921	Auto	12.8	1.40A	21.0	T5	Wedge (W2.1x9.5d)	C-2R	0.81	1.49	500	
67907			48			921LL	Auto, Long Life	12.8	1.40A	21	T5	Wedge (W2.1x9.5d)	C-2R	0.81	1.49	1000	
89238			48			921 NH	Auto, Nighthawk™	12.8	1.40A	21.0	T5	Wedge (W2.1x9.5d)	C-2R	0.81	1.49		
85938			25			921XE	Undercabinet	12.8	18.00W	21.0	T5	Wedge (W2.1x9.5d)	C-2R	0.81	1.49	10000	121
23027	13274	13275	48	50	1000	922	Auto	12.8	.98A	15.0	T5	Wedge (W2.1x9.5d)	C-2R	0.81	1.49	200	
71903			48			922 NH	Auto, Nighthawk™	12.8	.98A	15.0	T5	Wedge (W2.1x9.5d)	C-2R	0.81	1.49		

For the most up-to-date product information, see www.gelighting.com.
All footnotes, warning and caution notices found at the end of this section (page 8-34).

Miniature Lamps (continued)

Order Code			Case Qty															
Blister	Unit	Bulk	BP	Unit	Bulk	GE Lamp No.	Primary Application	Volts	Amps (A) or Watts (W)	MSCP	Bulb	Base	Filament	LCL (in)	MOL (in)	Rated Life (hrs)	Footnotes, Warning and Caution Notices
40180			30			**923**	Garden	12.8	.91A	12.5	T5	Wedge (W2.1x9.5d)	C-2R	0.81	1.49	500	
	13483			50		**926**	Emergency Lighting	4.0	1.80A	7.5	T5	Wedge (W2.1x9.5d)	C-2R	0.81	1.49	50	
	13485	**13486**		50	1000	**927**	Emergency Lighting	6.0	1.2A	8.0	T5	Wedge (W2.1x9.5d)	C-2R	0.81	1.49	50	
	16975	**15285**		50	1000	**939**	Emergency Lighting	6.0	.9A	5.4	T5	Wedge (W2.1x9.5d)	C-2R	0.81	1.49	50	
		23684			2500	**963**	Emergency Lighting	6.0	2.00A	15.0	T5	Wedge (W2.1x9.5d)	C-2R	0.81	1.49	50	
12367	**26709**		48	50		**1003**	Auto	12.8	.94A	15.0	B6	Single Contact Bayonet (BA15s)	C-6	1.06	1.75	200	
47800			48			**1003 LL**	Auto, Long Life	12.8	.94A	15.0	B6	Single Contact Bayonet (BA15s)	C-6	1.06	1.75	400	
71899			48			**1003 NH**	Auto, Nighthawk™	12.8	.94A	15.0	B6	Single Contact Bayonet (BA15s)	C-6	1.06	1.75		
12373	**26726**		48	50		**1004**	Auto	12.8	.94A	15.0	B6	Double Contact Bayonet (BA15d)	C-6	1.06	1.75	200	
	26775			50		**1034**	Auto Stop, Tail	12.8/14	1.80/.59A	32.0/3.0	S8	Double Contact Index (BAY15d)	C-6/C-6	1.25	2.00	200/ 5000	
40134	**26838**		48	50		**1073**	Auto Signal	12.8	1.8A	32.0	S8	Single Contact Bayonet (BA15s)	C-6	1.25	2.00	200	
71905			48			**1073NH**	Auto, Nighthawk™	12.8	1.8A	32.0	S8	Single Contact Bayonet (BA15s)	C-6	1.25	2.00		
00765	**26854**		48	50		**1076**	Auto	12.8	1.8A	32.0	S8	Double Contact Bayonet (BA15d)	C-6	1.25	2.00	200	
	26885			10		**1133**	Instrument	6.2	3.91A	32.0	RP11	Single Contact Bayonet (BA15s)	C-2R	1.25	2.25	200	305
12346	**26903**	**26905**	48	50	500	**1141**	Auto	12.8	1.44A	21.0	S8	Single Contact Bayonet (BA15s)	C-6	1.25	2.00	1000	
47802			48			**1141 LL**	Auto, Long Life	12.8	1.44A	21.0	S8	Single Contact Bayonet (BA15s)	C-6	1.25	2.00	2000	
71897			48			**1141 NH**	Auto, Nighthawk™	12.8	1.44A	21.0	S8	Single Contact Bayonet (BA15s)	C-6	1.25	2.00		
00759	**26917**	**26919**	48	50	500	**1142**	Auto	12.8	1.44A	21.0	S8	Double Contact Bayonet (BA15d)	C-6	1.25	2.00	1000	
12297			48			**1154**	Auto Stop, Tail	6.4/7.0	2.63/.75A	21.0/3.0	S8	Double Contact Index (BAY15d)	C-6	1.25	2.00	200/1000	
71889			48			**1154 NH**	Auto, Nighthawk™	6.4/7.0	2.63/.75A	21.0/3.0	S8	Double Contact Index (BAY15d)	C-6	1.25	2.00		
	26955			50		**1155**	Truck Marker	13.5	.59A	4.0	G6	Single Contact Bayonet (BA15s)	2C-2R	0.81	1.44	5000	4
12344	**26960**	**26962**	48	50	500	**1156**	Auto, Stop	12.8	2.10A	32.0	S8	Single Contact Bayonet (BA15s)	C-6	1.25	2.00	1200	
23334		**11666**	48		1000	**1156 LL**	Auto, Stop, Long Life	12.8	2.10A	32.0	S8	Single Contact Bayonet (BA15s)	C-6	1.25	2.00	2400	
21028	**20248**		48	50		**1156NA**	Auto, Amber	12.8	2.10A	24.0	S8	Single Contact Bayonet (BA15s)	C-6	1.25	2.00	1200	
89241			48			**1156 NH**	Auto, Nighthawk™	12.8	2.10A	32.0	S8	Single Contact Bayonet (BA15s)	C-6	1.25	2.00		
12294	**26969**	**26971**	48	50	500	**1157**	Auto Stop, Tail	12.8/14	2.10/.59A	32.0/3.0	S8	Double Contact Index (BAY15d)	C-6/C-6	1.25	2.00	1200 /5000	
23337			48			**1157 LL**	Auto Stop, Tail. Long Life	12.8/14	2.10/.59A	32.0/3.0	S8	Double Contact Index (BAY15d)	C-6/C-6	1.25	2.00	2400 /10000	
89236			48			**1157 NH**	Auto, Nighthawk™	12.8/14	2.10/.59A	32.0/3.0	S8	Double Contact Index (BAY15d)	C-6/C-6	1.25	2.00		
12310	**26975**	**26976**	48	50	500	**1157NA**	Auto, Amber	12.8/14	2.10/.59A	24.0/2.0	S8	Double Contact Index (BAY15d)	C-6/C-6	1.25	2.00	1200/ 5000	
47798			48			**1157NA LL**	Auto, Amber, Long Life	12.8/14	2.10/.59A	24.0/2.0	S8	Double Contact Index (BAY15d)	C-6/C-6	1.25	2.00	2400 /10000	
71891			48			**1157NA NH**	Auto, Amber, Nighthawk™	12.8/14	2.10/.59A	24.0/2.0	S8	Double Contact Index (BAY15d)	C-6/C-6	1.25	2.00		
	27004			10		**1176**	Auto Stop, Tail	12.8/14	1.34/.59A	21.0/6.0	S8	Double Contact Bayonet (BA15d)	C-6/C-6	1.25	2.00	300/ 1500	
	27021	**27023**		10	500	**1195**	Auto	12.5	3.00A	50.0	RP11	Single Contact Bayonet (BA15s)	C-2R	1.25	2.25	300	305
	27026			10		**1196**	Auto	12.5	3.00A	50.0	RP11	Double Contact Bayonet (BA15d)	C-2R	1.25	2.25	300	305
	39904			10		**1229**	Emergency Lighting	40.0	.38A	15.0	S8	Double Contact Bayonet (BA15d)	C-2V	1.12	2.00	400	
	81679			50		**1251**	Instrument	28.0	.23A	3.0	G6	Single Contact Bayonet (BA15s)	2C-2V	0.75	1.44	2000	
	22523		48	10		**1295NA**	Auto, Amber	12.5	3.00A	37.0	S8	Single Contact Bayonet (BA15s)	C-2R	1.25	2.00	200	
	12824			50		**1308**	Aircraft, Reading	28.0	.56A	16.0	B6	Single Contact Bayonet (BA15s)	CC-8	1.06	1.75	2000	
	81656			50		**1309**	Aircraft	28.0	.52A	15.0	B6	Single Contact Bayonet (BA15s)	CC-8	1.06	1.75	2000	
	81667			50		**1315**	Aircraft, Emergency	2.5	1.00A	1.8	G5	Single Contact Bayonet (BA15s)	C-6	0.69	1.25	20	116
	34265			50		**1317**	Aircraft, Emergency	6.0	.51A	3.4	B6	Single Contact Bayonet (BA15s)	C-6	1.12	1.75	100	116
	27150			10		**1383**	Aircraft, Reading	13.0	20.0W		R12	Single Contact Bayonet (BA15s)	C-8		2.63	300	
	27154			10		**1385**	Aircraft, Reading	28.0	20.0W		R12	Single Contact Bayonet (BA15s)	CC-8		2.63	300	
	27179			50		**1408**	Signal	10.0	.13A	0.9	T3 1/4	Miniature Bayonet (Ba9s)	C-2V	0.62	1.19	250	13
12329	**27207**		48	50		**1445**	Auto	14.4	.135A	0.7	G3 1/2	Miniature Bayonet (Ba9s)	C-2V	0.50	0.94	2000	13
	27263			50		**1450**	Indicator	24.0	.035A	0.2	G3 1/2	Miniature Bayonet (Ba9s)	C-2F	0.50	0.94	3000	
	81669			10		**1460X**	Microscope	6.5	2.75A	23.0	S8	Double Contact Prefocus	C-6	1.25	2.00	100	11
	81657			10		**1495**	Aircraft	28.0	.30A	6.0	T4 1/2	Miniature Bayonet (Ba9s)	C-2F	0.62	1.38	500	11
	81678			10		**1495X**	Aircraft, Gas Filled	28.0	.30A	6.0	T4 1/2	Miniature Bayonet (Ba9s)	C-2F	0.62	1.38	500	14
	81672			10		**1591**	Aircraft	28.0	.61A	15.0	S8	Single Contact Bayonet (BA15s)	C-2V	1.12	2.00	1000	13
	27461			10		**1612**	Instrument	5.4	1.90A	10.0	S8	Double Contact Bayonet (BA15d)	C-6	1.25	2.00	1000	147
	27472			10		**1619**	Instrument	6.7	1.90A	15.0	S8	Single Contact Bayonet (BA15s)	C-6	1.12	2.00	500	
	27488	**27489**		10	500	**1630**	Instrument	6.5	2.75A	23.0	S8	Double Contact Prefocus	C-6	1.00	2.00	100	11
	27504			50		**1638**	Marine	28.0	1.02A	32.0	S8	Double Contact Bayonet (BA15d)	2C-6	1.25	2.00	500	
	27529			10		**1662**	Aircraft	28/28	.93/.34A	32.0/6.0	S8	Double Contact Index (BAY15d)	CC-6/C-2V	1.25	2.00	400/1000	13,15,33
	27532			50		**1665**	Aircraft	28.0	.80A	21.0	S8	Single Contact Bayonet (BA15s)	C-2V	1.12	2.00	1000	13
	81658			50		**1665AF**	Aircraft, Frosted	28.0	.80A		S8	Single Contact Bayonet (BA15s)	C-2V		2.00	1000	13
	81668			10		**1680X**	Aircraft	6.0	4.10A	32.0	S8	Single Contact Bayonet (BA15s)	C-6	1.25	2.00	300	
	27557			50		**1683**	Aircraft, Series Filament	28.0	1.02A	32.0	S8	Single Contact Bayonet (BA15s)	2C-6	1.25	2.00	500	

For the most up-to-date product information, see www.gelighting.com.
All footnotes, warning and caution notices found at the end of this section (page 8-34).

Miniature Lamps (continued)

Order Code			Case Qty			GE Lamp No.	Primary Application	Volts	Amps (A) or Watts (W)	MSCP	Bulb	Base	Filament	LCL (in)	MOL (in)	Rated Life (hrs)	Footnotes, Warning and Caution Notices
Blister	Unit	Bulk	BP	Unit	Bulk												
	27566			50		1691	Aircraft, Series Filament	28.0	.61A	15.0	S8	Single Contact Bayonet (BA15s)	2C-2R	1.12	2.00	1000	
	27568			50		1691AF	Aircraft, Frosted	28.0	.61A		S8	Single Contact Bayonet (BA15s)	2C-2R		2.00	1000	
	27571			10		1692	Marine	28.0	.61A	15.0	S8	Double Contact Bayonet (BA15d)	2C-2R	1.12	2.00	1000	
	27630			10		1777	Aircraft	12.8	1.52A	26.0	S8	Single Contact Bayonet (BA15s)	C-2R	1.12	2.00	400	
	27667			50		1813	Radio	14.4	.10A	0.9	T3 1/4	Miniature Bayonet (Ba9s)	C-2V	0.62	1.19	1000	13
00758	27677	27679	48	50	4000	1815	Indicator	14.0	.20A	1.4	T3 1/4	Miniature Bayonet (Ba9s)	C-2F	0.75	1.19	3000	147
12359	27688		48	50		1816	Aircraft, Auto	13.0	.33A	3.0	T3 1/4	Miniature Bayonet (Ba9s)	C-2V	0.62	1.19	1000	13
	81659			50		1818	Aircraft	24.0	.17A	3.3	T3 1/4	Miniature Bayonet (Ba9s)	C-2F	0.62	1.19	250	147
	81660	81661		50	1000	1819	Indicator	28.0	.04A	0.3	T3 1/4	Miniature Bayonet (Ba9s)	C-2F	0.62	1.19	2500	
	81663			50		1820	Indicator	28.0	.10A	1.6	T3 1/4	Miniature Bayonet (Ba9s)	C-2F	0.62	1.19	1000	
	27749			50		1822	Indicator	36.0	.10A	2.1	T3 1/4	Miniature Bayonet (Ba9s)	C-2F	0.62	1.19	1000	
	27772			50		1828	Indicator	37.5	.05A	0.7	T3 1/4	Miniature Bayonet (Ba9s)	C-2F	0.62	1.19	3000	
	81664			50		1829	Indicator	28.0	.07A	1.0	T3 1/4	Miniature Bayonet (Ba9s)	C-2F	0.62	1.19	1000	
	27804			50		1835	Indicator	55.0	.05A	1.1	T3 1/4	Miniature Bayonet (Ba9s)	C-2F	0.62	1.19	5000	
	81665	81666		50	1000	1864	Aircraft	28.0	.17A	3.0	T3 1/4	Miniature Bayonet (Ba9s)	C-2F	0.62	1.19	1500	
	27868			50		1866	Radio	6.3	.25A	0.7	T3 1/4	Miniature Bayonet (Ba9s)	C-2R	0.78	1.19	5000	44
	40383			50		1873	Photo Scanner	28.0	.20A	3.0	T3 1/4	Miniature Bayonet (Ba9s)	C-2F	0.62	1.19	7000	
12331	27917		48	50		1891	Auto	14.0	.24A	2.0	T3 1/4	Miniature Bayonet (Ba9s)	C-2F	0.62	1.19	500	
00767	27927		48	50		1892	Auto	14.4	.12A	0.8	T3 1/4	Miniature Bayonet (Ba9s)	C-2F	0.62	1.19	1000	
12332	27935	27937	48	50	4000	1893	Auto	14.0	.33A	2.0	T3 1/4	Miniature Bayonet (Ba9s)	C-2F	0.62	1.19	7500	
12330	27945	27948	48	50	4000	1895	Auto	14.0	14.2	14.3	G4 1/2	Miniature Bayonet (Ba9s)	C-2F	0.56	1.07	2000	
71896			48			1895 NH	Auto, Nighthawk™	14.0	14.2	14.3	G4 1/2	Miniature Bayonet (Ba9s)	C-2F	0.56	1.07		
	34021			10		1939X	Aircraft	28.0	1.79A	70.0	T7	Single Contact Bayonet (BA15s)	C-2V	1.25	2.16	300	13,14
	28008			10		1940	Aircraft	14.0	3.57A	75.0	T7	Single Contact Bayonet (BA15s)	C-8Z	1.25	2.16	300	14
	18617			10		1946	Aircraft	28.0	250W	660.0	T3	2-Pin with Leads	CC-6	0.87	1.46	50	
	28011			10		1958	Aircraft	28.0	150W	250.0	T4	Tab	CC-8	0.75	2.25	300	304
	39641			10		1962B	Special Service	8.5	62W	100.0	T3	Wire Terminals	C-6	0.29	1.14	50	304
	12859			10		1962BG	Aircraft	8.5	62W	110.0	T3	Wire Terminals	C-6	0.29	1.14	50	304
	37947			10		1962DX	Special Service	8.5	62W	80.0	T3	Wire Terminals	C-6	0.29	1.14	150	304
	44152			10		1962DZ	Special Service	8.5	62W	80.0	T3	Wire Terminals	C-6	0.29	1.14	150	304
	13667			10		1962TY	Medical	8.5	62W	110.0	T3	Wire Terminals	C-6	0.29	1.14	50	304
	28034			10		1968	Aircraft	28.0	25W	15.0	T3	Double Slide	C-2V	0.41	1.17	500	13,304
	41938			100		1970X	Aircraft	28.0	100W	140.0	T3	Special	CC-8		2.25	1000	13,304
	32780			10		1974	Instrument	6.0	20W	10.0	T3	Wire Terminals	C-6	0.29	1.14	10000	304
	38545			100		1978X	Aircraft	10.0	100W	130.0	T3	Bi-Pin (Special)	C-8		2.15	2000	304
	38627			10		1982	Aircraft	28.0	75W	11.0	T3	Single Contact Bayonet (BA15s)	CC-8	1.06	1.88	1000	13,304
	21061			10		1982SP	Aircraft	28.0	75W	107.0	T3	Single Contact Bayonet (BA15s)	CC-6	1.00	1.97	2000	304
	39718			10		1983	Aircraft	10.0	100W	130.0	T4	2-Pin	C-8	1.25	1.80	2000	304
	44717			10		1986	Aircraft	28.0	250W	600.0	T4	Wire Terminals	CC-6	1.03	2.00	100	304
	47695			10		1987	Aircraft	28.0	150W	240.0	T4	Double Contact Bayonet (BA15d)	CC-6	1.18	2.44	700	304
	38535			10		1988	Aircraft	10.0	100W	130.0	T3	Special Wire Leads	C-8		2.15	2000	304
12326	19280		48	10		2040	Auto	12.8	.625A	10.5	T2 1/4	Wedge (W2.1x9.5d)	C-6	0.40	1.25	500	306
12296	44760	18620	48	50	500	2057	Auto, Stop, signal	12.8/14.0	2.1/.48A	32.0/2.0	S8	Double Contact Index (BAY15d)	C-6/C-6	1.25	2.00	1200/ 5000	
23339			48			2057 LL	Auto, Long Life	12.8/14.0	2.1/.48A	32.0/2.0	S8	Double Contact Index (BAY15d)	C-6/C-6	1.25	2.00	2400/ 10000	
89237			48			2057 NH	Auto, Nighthawk™	12.8/14.0	2.1/.48A	32.0/2.0	S8	Double Contact Index (BAY15d)	C-6/C-6	1.25	2.00		
12312	44763		48	50		2057NA	Auto, Amber	12.8/14.0	2.1/.48A	24.0/1.5	S8	Double Contact Index (BAY15d)	C-6/C-6	1.25	2.00	1200/ 5000	
47799			48			2057NA LL	Auto, Amber, Long Life	12.8/14.0	2.1/.48A	24.0/1.5	S8	Double Contact Index (BAY15d)	C-6/C-6	1.25	2.00	2400/ 10000	
71892			48			2057NA NH	Auto, Amber, Nighthawk™	12.8/14.0	2.1/.48A	24.0/1.5	S8	Double Contact Index (BAY15d)	C-6/C-6	1.25	2.00		
		12899			600	2058U	Truck	12.8/14.0	2.1/.48A	32.0/2.0	S8	Wire Terminals	C-6/C-6		1.81	1200/ 5000	113
	26697			10		2059	Aircraft	12.0	.833A	9.1	T2 1/2	Miniature Bayonet (Ba9s)	C-8	0.59	1.30	4000	304
	26698			10		2059X	Aircraft	12.0	.833A	8.0	T2 1/2	Miniature Bayonet (Ba9s)	C-8	0.59	1.30	4000	304
	21494			10		2074	Instrument	7.0	25W	24.0	T3	Wire Terminals	C-6	0.285	1.14	2700	304
	34763			50		2232	Aircraft	28.0	18W	18.0	S8	Single Contact Bayonet (BA15s)	CC-8	1.19	2.00	2000	
	26702			50		2232LL	Aircraft, Long Life	28.0	18W	18.0	S8	Single Contact Bayonet (BA15s)	CC-8	1.19	2.00	4000	
	81677			10		2232SB	Aircraft, Reflectorized	28.0	18W		S8	Single Contact Bayonet (BA15s)	CC-8	1.19	2.00	2000	
	36906			10		2233	Aircraft	28.0	21W	21.0	S8	Single Contact Bayonet (BA15s)	CC-8	1.19	2.00	2000	
12298	16291		48	50		2357	Auto, Stop, signal	12.8/14.0	2.2/.59A	40.0/3.0	S8	Double Contact Index (BAY15d)	C-6/C-6	1.25	2.00	400/ 5000	
67904			48			2357LL	Auto, Stop, signal, Long Life	12.8/14.0	2.2/.59A	40.0/3.0	S8	Double Contact Index (BAY15d)	C-6/C-6	1.25	2	800/ 10000	
71890			48			2357 NH	Auto, Nighthawk™	12.8/14.0	2.2/.59A	40.0/3.0	S8	Double Contact Index (BAY15d)	C-6/C-6	1.25	2.00		

For the most up-to-date product information, see www.gelighting.com.
All footnotes, warning and caution notices found at the end of this section (page 8-34).

Miniature Lamps (continued)

Order Code			Case Qty			GE Lamp No.	Primary Application	Volts	Amps (A) or Watts (W)	MSCP	Bulb	Base	Filament	LCL (in)	MOL (in)	Rated Life (hrs)	Footnotes, Warning and Caution Notices
Blister	Unit	Bulk	BP	Unit	Bulk												
12299	15698		48	50		2357NA	Auto, Amber	12.8/14.0	2.2/.59A	30.0/2.2	S8	Double Contact Index (BAY15d)	C-6	1.25	2.00	400/ 5000	
	18047			10		2396	Auto, Stop	12.8	2.23A	40.0	S8	Single Contact Bayonet (BA15s)	C-6	1.25	2.00	400	
27560			48			2397	Auto, Stop, signal	12.8/14.0	2.23/.48A	40.0/2.0	S8	Double Contact Index (BAY15d)	C-6/C-6	1.25	2.00	400/ 5000	
		19792			100	2556	Aircraft	28.0	200W	525.0	T3	2-Pin	CC-6	0.87	1.46	50	304
		19566			100	2586	Aircraft	28.0	250W	600.0	T4	2-Pin with Insulation Leads	CC-6	1.30	1.90	100	304
	43805			10		2604X	Instrument, Lens end	5.0	2.0A		TL2 3/4	2-Pin (G4)	C-6		1.18	5000	124,128,306
	36508			10		3011	Aircraft	28.0	1.29A	44.0	S11	Single Contact Bayonet (BA15s)	C-2V	1.25	2.38	1000	13
12305	18389		48	50		3057	Auto, Stop, signal	12.8/14.0	2.1/.48A	32.0/2.0	S8	Plastic Wedge	C-6/C-6	1.10	2.09	1200/ 5000	
26378			48			3057 LL	Auto, Long Life	12.8/14.0	2.1/.48A	32.0/2.0	S8	Plastic Wedge	C-6/C-6	1.10	2.09	2000/ 10000	
89243			48			3057 NH	Auto, Nighthawk™	12.8/14.0	2.1/.48A	32.0/2.0	S8	Plastic Wedge	C-6/C-6	1.10	2.09		
12313	18391		48	50		3057NA	Auto, Amber	12.8/14.0	2.1/.48A	24.0/1.5	S8	Plastic Wedge	C-6/C-6	1.10	2.09	1200/ 5000	
	14698			10		3078	Aircraft	10.0	100W	95.0	T3	Special	C-8	1.10	2.15	4500	304
23028			48			3155	Auto, Signal	12.8	1.60A	21.0	S8	Plastic Wedge	C-6	1.10	2.09	1500	
12351	21863		48	50		3156	Auto, Stop	12.8	2.1A	32.0	S8	Plastic Wedge	C-6	1.10	2.09	1200	
27565			48			3156 LL	Auto, Long Life	12.8	2.1A	32.0	S8	Plastic Wedge	C-6	1.10	2.09	2000	
71898			48			3156 NH	Auto, Nighthawk™	12.8	2.1A	32.0	S8	Plastic Wedge	C-6	1.10	2.09		
12306	17172		48	50		3157	Auto, Stop, signal	12.8/14.0	2.1/.59A	32.0/3.0	S8	Plastic Wedge	C-6/C-6	1.10	2.09	1200/ 5000	
26377			48			3157 LL	Auto, Long Life	12.8/14.0	2.1/.59A	32.0/3.0	S8	Plastic Wedge	C-6/C-6	1.10	2.09	2000/ 10000	
89244			48			3157 NH	Auto, Nighthawk™	12.8/14.0	2.1/.59A	32.0/3.0	S8	Plastic Wedge	C-6/C-6	1.10	2.09		
12314	17173		48	50		3157NA	Auto, Amber	12.8/14.0	2.1/.59A	24.0/2.2	S8	Plastic Wedge	C-6/C-6	1.10	2.09	1200/ 5000	
26380			48			3157NA LL	Auto, Amber, Long Life	12.8/14.0	2.1/.59A	24.0/2.2	S8	Plastic Wedge	C-6/C-6	1.10	2.09	2000/ 10000	
71893			48			3157NA NH	Auto, Amber, Nighthawk™	12.8/14.0	2.1/.59A	24.0/2.2	S8	Plastic Wedge	C-6/C-6	1.10	2.09		
14387	22525		48	50		3357/3457	Auto, Stop, signal	12.8/14.0	2.1/.59A	40.0/3.0	S8	Plastic Wedge	C-6/C-6	1.10	2.09	400/ 5000	
26379			48			3357/ 3457 LL	Auto, Long Life	12.8/14.0	2.1/.59A	40.0/3.0	S8	Plastic Wedge	C-6/C-6	1.10	2.09	800/ 10000	
71901			48			3457NH	Auto, Nighthawk™	12.8/14.0	2.1/.59A	40.0/3.0	S8	Plastic Wedge	C-6/C-6	1.10	2.09		
14388	22526		48	50		3357NA/ 3457NA	Auto, Amber	12.8/14.0	2.1/.59A	30.0/2.2	S8	Plastic Wedge	C-6/C-6	1.10	2.09	400/ 5000	
67910			48			3357NALL/ 3457NALL	Auto, Amber, Long Life	12.8/14.0	2.1/.59A	30.0/2.2	S8	Plastic Wedge	C-6/C-6	1.1	2.09	800/ 10000	
25834			48			3496	Auto, Japanese	12.8/14.0	2.1/.59A	43.0/3.0	T7	Double Contact Index (BAY15d)	C-6/C-6		2.00	600/ 5000	
25835			48			3497	Auto, Japanese	12.8	2.1A	45.0	T7	Single Contact Bayonet (BA15s)	C-6		2.00	600	
25837			48			3652	Auto, Japanese	13.5	.37A	6.0	T3 1/4	Wedge (W2.1x9.5d)			1.06	700	
15657			48			4157LL	Auto, Stop, signal	12.8/14.0	2.23/.59A	32.0/3.0	S8	Plastic Wedge	C-6/C-6	1.10	2.09	3600/ 10000	
47458			48			4157NA LL	Auto, Stop, signal, Amber	12.8/14.0	2.23/.59A	24.0/2.2	S8	Plastic Wedge	C-6/C-6	1.10	2.09	3600/ 10000	
	28154			24		5004 CW	Aircraft-Cool White	A.C.	4W	11.9	T5	Miniature Pinless			6.00	7500	32,162,309
	28155			24		5004 WW	Aircraft-Warm White	A.C.	4W	11.1	T5	Miniature Pinless			6.00	7500	32,162,309
	28160			24		5008CW	Aircraft-Cool White	A.C.	8W	35.4	T5	Miniature Pinless			12.00	7500	32,162,309
	28163			24		5008WW	Aircraft-Warm White	A.C.	8W	34.6	T5	Miniature Pinless			12.00	7500	32,162,309
	28168			24		5013CW	Aircraft-Cool White	A.C.	13W	65.2	T5	Miniature Pinless			21.00	7500	32,162,309
	28169			24		5013WW	Aircraft-Warm White	A.C.	13W	62.8	T5	Miniature Pinless			21.00	7500	32,162,309
	27367			24		5104CW	Aircraft-Cool White	A.C.	4W	11.9	T5	Miniature Bi-Pin			6.00	7500	32,162,309
	28173			24		5104 WW	Aircraft-Warm White	A.C.	4W	11.1	T5	Miniature Bi-Pin			6.00	7500	32,162,309
	12774			24		5106CW	Aircraft-Cool White	A.C.	6W	24.7	T5	Miniature Bi-Pin			9.00	7500	32,162,309
	33612			24		5106WW	Aircraft-Warm White	A.C.	6W	23.9	T5	Miniature Bi-Pin			9.00	7500	32,162,309
	27466			24		5108CW	Aircraft-Cool White	A.C.	8W	35.4	T5	Miniature Bi-Pin			12.00	7500	32,162,309
	28175			24		5108 WW	Aircraft-Warm White	A.C.	8W	34.6	T5	Miniature Bi-Pin			12.00	7500	32,162,309
	12775			24		5113CW	Aircraft-Cool White	A.C.	13W	65.2	T5	Miniature Bi-Pin			21.00	7500	32,162,309
	28178			24		5113 WW	Aircraft-Warm White	A.C.	13W	62.8	T5	Miniature Bi-Pin			21.00	7500	32,162,309
		29897			1000	6034BP	Aircraft	28.0	.024A	0.15	T1 3/4	Bi-Pin (M-23)	C-2F		0.64	5000	
		29895			1000	6034BPGPL	Aircraft	28.0	.024A	0.15	T1 3/4	BI-Pin (M-23)	C-2F		0.64	5000	
		87360			1000	6832	Aircraft	5.0	.06A	0.05	T1	Short Wire Terminal	C-2R		0.14	100000	
		87351			1000	6832AS15	Aircraft	5.0	.06A	0.05	T1	Short Wire Terminal	C-2R		0.14	100000	
		87291			1000	6839	Aircraft	28.0	.024A	0.15	T1	Sub-Midget Flanged	CC-2F		0.36	16000	
		29893			1000	6839BPE	Aircraft	28.0	.024A	0.15	T1	BI-Pin (M-23)	CC-2F		0.35	16000	
		29894			1000	6839BPEGPL	Aircraft	28.0	.024A	0.15	T1	BI-Pin (M-23)	CC-2F		0.35	16000	
		87274			1000	7132AS15	Aircraft	5.0	.075A	0.09	T1	Short Wire Terminal	C-2R		0.14	40000	

For the most up-to-date product information, see www.gelighting.com.
All footnotes, warning and caution notices found at the end of this section (page 8-34).

Miniature Lamps (continued)

Order Code			Case Qty			GE Lamp No.	Primary Application	Volts	Amps (A) or Watts (W)	MSCP	Bulb	Base	Filament	LCL (in)	MOL (in)	Rated Life (hrs)	Footnotes, Warning and Caution Notices
Blister	Unit	Bulk	BP	Unit	Bulk												
		87402			1000	**7152**	Aircraft	5.0	.115A	0.15	T1	Short Wire Terminal	C-2R		0.14	40000	
		97548			1000	**7152AS15**	Aircraft	5.0	.115A	0.15	T1	Short Wire Terminal	C-2R		0.14	40000	
	28926			50		**7387**	Indicator	28.0	.04A	0.3	T1 3/4	Bi-Pin (M-23)	C-2F	0.50	0.61	7000	79
26200			48			**7440**	Auto, Japanese Vehicles	13.5	1.85A	37.0	T7	Wedge (103x16DQ)	C-6		1.75	300	
67905			48			**7440LL**	Auto, Japanese Vehicles, Long Life	13.5	1.85A	37	T7	Wedge (103x16DQ)	C-6		1.75	600	
26201			48			**7443**	Auto, Japanese Vehicles	13.5/13.5	1.85/.4A	35.0/3.0	T7	Wedge (103x16DQ)	C-6/C-6		1.75	500/1000	
67906			48			**7443LL**	Auto, Japanese Vehicles, Long Life	13.5/13.5	1.85/.4A	35.0/3.0	T7	Wedge (103x16DQ)	C-6/C-6		1.75	1000/2000	
89248			48			**7443 NH**	Auto, Nighthawk™	13.5/13.5	1.85/.4A	35.0/3.0	T7	Wedge (103x16DQ)	C-6/C-6		1.75		
22432	**22389**	**14542**	48	100	200	**9003/HB2**	Auto headlamp	12.8/12.8	60/55W	119.0/72.0	T4 3/4	P43T-38	C-8/C-8	1.12	3.62	150/800	4,306
78935			48			**9003 LL**	Auto headlamp, Long Life	12.8/12.8	67/60W	119.0/72.0	T4 3/4	P43T-38	C-8/C-8	1.12	3.62	300/1600	4,306
25107			12			**9003 NH**	Auto, Nighthawk™	12.8/12.8	67/60W	119.0/72.0	T4 3/4	P43T-38	C-8/C-8	1.12	3.62	160/260	4,306
25150			24			**9003 NH**	Auto, Nighthawk™	12.8/12.8	67/60W	119.0/72.0	T4 3/4	P43T-38	C-8/C-8	1.12	3.62	160/260	4,306
89139			24			**9003 NHS**	Auto, Nighthawk™ Sport	12.8/12.8	67/60W	119.0/72.0	T4 3/4	P43T-38	C-8/C-8	1.12	3.62	100/200	4,306
89230			12			**9003 NHS**	Auto, Nighthawk™ Sport	12.8/12.8	67/60W	119.0/72.0	T4 3/4	P43T-38	C-8/C-8	1.12	3.62	100/200	4,306
66004			3			**9003 NHS**	Auto, Nighthawk™ Sport	12.8/12.8	67/60W	119.0/72.0	T4 3/4	P43T-38	C-8/C-8	1.12	3.62	100/200	4,306
75814			12			**9003 NHP**	Auto, Nighthawk™ Platinum	12.8/12.8	67/60W	119.0/72.0	T4 3/4	P43T-38	C-8/C-8	1.12	3.62	125/125	4,306
69861			12			**9003 NHX**	Auto, Nighthawk™ Xenon	12.8/12.8	67/60W	119.0/72.0	T4 3/4	P43T-38	C-8/C-8	1.12	3.62	125/125	4,306
18508	**13382**		48	100		**9004/HB1**	Auto headlamp	12.8/12.8	65/45A	95.0/55.0	T4 3/4	Axial Plastic Prefocus	C-6/C-6	1.75	4.17	150/320	4,306
13993	**11249**	**20559**	48	100	250	**9004 LL**	Auto, Long Life	12.8/12.8	65/47W	95.0/55.0	T4 3/4	Axial Plastic Prefocus	C-6/C-6	1.75	4.17	150/850	4,306
25106			12			**9004 NH**	Auto, Nighthawk™	12.8/12.8	65/45A	95.0/55.0	T4 3/4	Axial Plastic Prefocus	C-6/C-6	1.75	4.17	150/225	4,306
25149			24			**9004 NH**	Auto, Nighthawk™	12.8/12.8	65/45A	95.0/55.0	T4 3/4	Axial Plastic Prefocus	C-6/C-6	1.75	4.17	150/225	4,306
97698			24			**9004 NHS**	Auto, Nighthawk™ Sport	12.8/12.8	65/45A	95.0/55.0	T4 3/4	Axial Plastic Prefocus	C-6/C-6	1.75	4.17	97/178	4,306
97699			12			**9004 NHS**	Auto, Nighthawk™ Sport	12.8/12.8	65/45A	95.0/55.0	T4 3/4	Axial Plastic Prefocus	C-6/C-6	1.75	4.17	97/178	4,306
75815			12			**9004 NHP**	Auto, Nighthawk™ Platinum	12.8/12.8	65/45A	95.0/55.0	T4 3/4	Axial Plastic Prefocus	C-6/C-6	1.75	4.17	50/150	4,306
18509	**13384**	**36431**	48	100	200	**9005/HB3**	Auto headlamp	12.8	65W	135.0	T4	Right Angle (P20d)	C-8	1.24	3.13	800	4,306
25105			12			**9005 NH**	Auto, Nighthawk™	12.8	65W	135.0	T4	Right Angle (P20d)	C-8	1.24	3.13	340	4,306
25148			24			**9005 NH**	Auto, Nighthawk™	12.8	65W	135.0	T4	Right Angle (P20d)	C-8	1.24	3.13	340	4,306
89140			24			**9005 NHS**	Auto, Nighthawk™ Sport	12.8	65W	135.0	T4	Right Angle (P20d)	C-8	1.24	3.13	340	4,306
89232			12			**9005 NHS**	Auto, Nighthawk™ Sport	12.8	65W	135	T4	Right Angle (P20d)	C-8	1.24	3.13	120	4,306
75816			12			**9005 NHP**	Auto, Nighthawk™ Platinum	12.8	65W	135	T4	Right Angle (P20d)	C-8	1.24	3.13	100	4,306
69862			12			**9005 NHX**	Auto, Nighthawk™ Xenon	12.8	65W	135	T4	Right Angle (P20d)	C-8	1.24	3.13	100	4,306
45866			48			**9005 XS LL**	Auto, Axial Base, Long Life	12.8	65W	135.0	T4	Axial Plastic	C-8	1.24	3.13	700	4,306
18510	**13397**	**36432**	48	100	200	**9006/HB4**	Auto headlamp	12.8	51W	80.0	T4	Right Angle (P22d)	C-8	1.24	3.13	850	4,306
25104			12			**9006 NH**	Auto, Nighthawk™	12.8	55W	80.0	T4	Right Angle (P22d)	C-8	1.24	3.13	1200	4,306
25147			24			**9006 NH**	Auto, Nighthawk™	12.8	55W	80.0	T4	Right Angle (P22d)	C-8	1.24	3.13	1200	4,306
97700			24			**9006 NHS**	Auto, Nighthawk™ Sport	12.8	55W	80.0	T4	Right Angle (P22d)	C-8	1.24	3.13	400	4,306
97701			12			**9006 NHS**	Auto, Nighthawk™ Sport	12.8	55W	80.0	T4	Right Angle (P22d)	C-8	1.24	3.13	400	4,306
75817			12			**9006 NHP**	Auto, Nighthawk™ Platinum	12.8	55W	80	T4	Right Angle (P22d)	C-8	1.24	3.13	125	4,306
69863			12			**9006 NHX**	Auto, Nighthawk™ Xenon	12.8	55W	80	T4	Right Angle (P22d)	C-8	1.24	3.13	125	4,306
45868			48			**9006 XS LL**	Auto, Axial Base, Long Life	12.8	55W	80.0	T4	Axial Plastic	C-8	1.24	3.13	1500	4,306
22388	**20551**	**20552**	48	100	250	**9007/HB5**	Auto headlamp	12.8/12.8	65/55W	107.0/79.0	T4 3/4	Axial Plastic Prefocus	C-8/C-8	1.75	4.17	150/1,100	4,306
78639			48			**9007 LL**	Auto headlamp, Long Life	12.8/12.8	65/55W	107.0/79.0	T4 3/4	Axial Plastic Prefocus	C-8/C-8	1.75	4.17	300/2200	4,306
25103			12			**9007 NH**	Auto, Nighthawk™	12.8/12.8	65/55W	107.0/79.0	T4 3/4	Axial Plastic Prefocus	C-8/C-8	1.75	4.17	250/250	4,306
25146			24			**9007 NH**	Auto, Nighthawk™	12.8/12.8	65/55W	107.0/79.0	T4 3/4	Axial Plastic Prefocus	C-8/C-8	1.75	4.17	250/250	4,306
97696			24			**9007 NHS**	Auto, Nighthawk™ Sport	12.8/12.8	65/55W	107.0/79.0	T4 3/4	Axial Plastic Prefocus	C-8/C-8	1.75	4.17	131/370	4,306

For the most up-to-date product information, see www.gelighting.com.
All footnotes, warning and caution notices found at the end of this section (page 8-34).

Miniature Lamps (continued)

Order Code			Case Qty															
Blister	Unit	Bulk	BP	Unit	Bulk	GE Lamp No.	Primary Application	Volts	Amps (A) or Watts (W)	MSCP	Bulb	Base	Filament	LCL (in)	MOL (in)	Rated Life (hrs)	Footnotes, Warning and Caution Notices
97697			12			9007 NHS	Auto, Nighthawk™ Sport	12.8/12.8	65/55W	107.0/79.0	T4 3/4	Axial Plastic Prefocus	C-8/C-8	1.75	4.17	131/370	4,306
75818						9007 NHP	Auto, Nighthawk™ Platinum	12.8/12.8	65/55W	107.0/79.0	T4 3/4	Axial Plastic Prefocus	C-8/C-8	1.75	4.17	90/150	4,306
69864			12			9007 NHX	Auto, Nighthawk™ Xenon	12.8/12.8	65/55W	107.0/79.0	T4 3/4	Axial Plastic Prefocus	C-8/C-8	1.75	4.17	90/150	4,306
71342			48			9008(H13)	Auto headlamp	12.8/12.8	65/55w	119.0/79.6	T4 5/8	P26.4t	C-8/C-8	1.00	3.54	320/150	4,306
78653			12			9008(H13) NH	Auto headlamp, Nighthawk™	12.8/12.8	65/55w	119.0/79.6	T4 5/8	P26.4t	C-8/C-8	1	3.54	320/150	4,306
78654			12			9008(H13) NHS	Auto headlamp, Nighthawk™ Sport	12.8/12.8	65/55w	119.0/79.6	T4 5/8	P26.4t	C-8/C-8	1	3.54	320/150	4,306
62430			12			9008(H13) NHP	Auto headlamp, Nighthawk™ Platinum	12.8/12.8	65/55w	119.0/79.6	T4 5/8	P26.4t	C-8/C-8	1	3.54	320/150	4,306
40843		42382	48		200	9145/H10	Auto Fog	12.8	45W	65.0	T4	PY20D	C-8	1.24	3.01	1500	4,306
47461			48			58540	Auto, Halogen	13.5	.37A	63.0	T3	Miniature Bayonet (Ba9s)	C-2R	0.59	1.22	240	308
	26696			10		A-103	Aircraft	28.0	50W	60.0	T3	Bi-Pin (Special)	CC-8		1.87	1000	304
	12064			10		B1A	Neon Glow-NE51	120.0	1/25W		T3 1/4	Miniature Bayonet (Ba9s)			1.19	15000	164
	12065			10		B2A	Neon Glow-NE51H	120.0	1/7W		T3 1/4	Miniature Bayonet (Ba9s)			1.19	25000	164
	31675			10		B7A	Neon Glow-NE45	120.0	1/4W		T4 1/2	Candelabra Screw (E12)			1.53	7500	164
23312			48			C5W	Auto. ECE C5W	13.5	.37A	3.6	T3 1/2	SV8.5MM			1.45	450	
	78734			12		D1S	Auto Discharge-Projector	85	35W					1.06		3000	1,2,310
	80851	70603		24	144	D2R	Auto Discharge-Reflector	85.0	35W	114.0	T3	P32d-3		1.06	3.09	1000	1,2,310
	25088	70605		24	144	D2S	Auto Discharge-Projector	85.0	35W	254.0	T3	P32d-2		1.06	3.09	1000	1,2,310
	90057			32		D2S BLUE	Non-Auto Discharge	85.0	35W		T3	P32d-2		1.06	3.09	1000	1,2,310
	90059			32		D2S SUPERBLUE	Non-Auto Discharge	85.0	35W		T3	P32d-2		1.06	3.09	1000	1,2,310
25323			48			DE3021	Auto	14.0	.24A	2.0	T2 1/4	#10 Spade			1.15	1000	
12353			48			DE3022	Auto	13.0	.38A	3.0	T2 1/4	#10 Spade			1.18	1000	
12354	12084	28858	48	50	5000	DE3175	Auto	13.0	.77A	9.6	T3 1/4	SV8.5MM			1.25	400	
67909			48			DE3175LL	Auto, Long Life	13	.77A	9.6	T3 1/4	SV8.5MM			1.25	800	
89245			48			DE3175 NH	Auto, Nighthawk™	13.0	.77A	9.6	T3 1/4	SV8.5MM			1.25		
	12085			10		DE 3425	Auto	13.0	.77A	9.6	T4	SV8.5MM			1.50	400	
23324			48			DE7576	Strip Lighting	13.5	.74A	9.8	T3 1/2	SV8.5MM			1.65	200	
40336	27328	32376	48	10	300	H1-55	Auto, GE 50310/1	13.2	62W	123.0	T3 1/2	P14.5S	C-8	1.08	2.66	225	308
25159			24			H1-55 NH	Auto, Nighthawk™	13.2	62W	123.0	T3 1/2	P14.5S	C-8	1.08	2.66	1000	308
25092			12			H1-55 NH	Auto, Nighthawk™	13.2	62W	123.0	T3 1/2	P14.5S	C-8	1.08	2.66	1000	308
94193			12			H1-55NHP	Auto, Nighthawk™ Platinum	13.2	62W	123	T3 1/2	P14.5S	C-8	1.08	2.66	250	308
69857			12			H1-55NHX	Auto, Nighthawk™ Xenon	13.2	62W	123	T3 1/2	P14.5S	C-8	1.08	2.66	250	308
78134			12			H1-55NHP	Auto, Nighthawk™ Platinum	13.2	62W	123	T3 1/2	P14.5S	C-8	1.08	2.66	250	308
	27569			10		H1-70	Auto, GE50230/1	28.0	80W	151.0	T3 1/2	P14.5S	C-8	1.08	2.46	600	308
	27330			10		H2-55	Auto, GE 50410	13.2	62W	143.0	T3 1/2	X511	C-8	0.48	1.22	225	308
		23442			400	H3-35	CIM, GE 50390	13.2	40W	60.0	T3 1/2	PK22S	C-6	0.71	1.65	200	308
12339	27331	22132	48	10	400	H3-55	Auto, GE 50340	12	62W	115.0	T3 1/2	PK22S	C-6	0.71	1.65	225	308
		23445			400	H3-55D	CIM, GE 50340D	13.2	62W	111.0	T3 1/2	PK22S	C-6	0.71	1.65	600	308
		35044			400	H3-55LL	Auto, GE50340, Long Life	13.2	64W	106.0	T3 1/2	PK22S	C-6	0.71	1.65	2000	308
		23428			400	H3-65/28V	CIM, GE 52590D	28.0	66W	102.0	T3 1/2	PK22S	C-6	0.71	1.65	1000	308
	27332			10		H3-70/28V	CIM, GE50350	28.0	75W	135.0	T3 1/2	PK22S	CC-6	0.71	1.65	225	308
12341			48			H3-100	Off Road, GE52130	13.2	92W	187.0	T3 1/2	PK22S	C-6	0.71	1.65	100	308
18132	27334	22133	48	10	200	H4-60/55	Auto H4.GE 50440	13.2/13.2	71/66W	138.0/80.0	T5	P43T-38	C-8/C-8	1.12	3.62	225/900	308
25094			24			H4-60 NH	Auto, Nighthawk™	13.2/13.2	71/66W	138.0/80.0	T5	P43T-38	C-8/C-8	1.12	3.62	300	
75820			12			H4-60NHP	Auto, Nighthawk™ Platinum	13.2/13.2	71/66W	138.0/80.0	T5	P43T-38	C-8/C-8	1.12	3.62	250/250	
69858			12			H4-60NHX	Auto, Nighthawk™ Xenon	13.2/13.2	71/66W	138.0/80.0	T5	P43T-38	C-8/C-8	1.12	3.62	250/250	
	27342	93732		10	200	H4-75/70/24V	Bus, GE 50450	24.0/24.0	80/73W	151.0/95.0	T5	P43T-38	C-8/C-8	1.14	3.62	150/300	308
26374		38641	48		200	H7-55	Auto, ECE/DOT, GE58520	13.2	57W	115.0	T3 1/2	PX26D	C-8	0.98	2.36	500	308
78640			48			H7-55 LL	Auto, ECE/DOT, GE58520, Long Life	13.2	57W	115	T3 1/2	PX26D	C-8	0.98	2.36	1000	308
		35755			200	H7-55LL	Auto, ECE/DOT	13.2	57W	115.0	T3 1/2	PX26D	C-8	0.98	2.36	610	
25160			24			H7-55 NH	Auto, Nighthawk™	13.2	57W	115.0	T3 1/2	PX26D	C-8	0.98	2.36	250	

For the most up-to-date product information, see www.gelighting.com.
All footnotes, warning and caution notices found at the end of this section (page 8-34).

Miniature Lamps (continued)

Order Code			Case Qty														
Blister	Unit	Bulk	BP	Unit	Bulk	GE Lamp No.	Primary Application	Volts	Amps (A) or Watts (W)	MSCP	Bulb	Base	Filament	LCL (in)	MOL (in)	Rated Life (hrs)	Footnotes, Warning and Caution Notices
89141			24			**H7-55 NHS**	Auto, Nighthawk™ Sport	13.2	57W	115.0	T3 1/2	PX26D	C-8	0.98	2.36	130	308
89235			12			**H7-55 NHS**	Auto, Nighthawk™ Sport	13.2	57W	115	T3 1/2	PX26D	C-8	0.98	2.36	130	308
66006			3			**H7-55 NHS**	Auto, Nighthawk™ Sport	13.2	57W	115	T3 1/2	PX26D	C-8	0.98	2.36	130	308
75821			12			**H7-55NHP**	Auto, Nighthawk™ Platinum	13.2	57W	115	T3 1/2	PX26D	C-8	0.98	2.36	130	308
69860			12			**H7-55NHX**	Auto, Nighthawk™ Xenon	13.2	57W	115	T3 1/2	PX26D	C-8	0.98	2.36	130	308
29047		**15765**	48		140	**H8**	Auto, ECE Fog	13.2	40W	64.0	T3 1/2	PGJ19-1	C-8	1.06	2.63	400	2,308
29049		**15827**	48		140	**H9**	Auto, ECE headlamp	13.2	65W	167.0	T3 1/2	PGJ19-5	C-8	1.08	2.63	125	2,308
23762		**15828**	48		140	**H11**	Auto, ECE headlamp	13.2	55W	107.0	T3 1/2	PGJ19-2	C-8	1.07	2.63	550	2,308
89255		**15963**	48		140	**H11LL**	Auto, ECE headlamp. Long Life	13.2	55W	107.0	T3 1/2	PGJ19-2	C-8	1.07	2.63	1100	4,308
62267			12			**H11-55NHP**	Auto, Nighthawk™ Platinum	13.2	55W	107	T3 1/2	PGJ19-2	C-8	1.07	2.63	125	4,308
69865			12			**H11-55NHX**	Auto, Nighthawk™ Xenon	13.2	55W	107	T3 1/2	PGJ19-2	C-8	1.07	2.63	125	4,308
76189			12			**H11 C55NHP**	Auto, Nighthawk™ Platinum	13.2	55W	107	T3 1/2	PGJ19-2	C-8	1.07	2.63	125	4,308
71342			48			**H13 (9008)**	Auto headlamp	12.8/12.8	65/55W	119.0/79.6	T4 5/8	P26.4t	C-8/C-8	1.00	3.54	320/150	308
78653			12			**H13 (9008) NH**	Auto headlamp, Nighthawk™	12.8/12.8	65/55w	119.0/79.6	T4 5/8	P26.4t	C-8/C-8	1	3.54	320/150	4,306
78654			12			**H13 (9008) NHS**	Auto headlamp, Nighthawk™ Sport	12.8/12.8	65/55w	119.0/79.6	T4 5/8	P26.4t	C-8/C-8	1	3.54	320/150	4,306
62430			12			**H13 (9008) NHP**	Auto headlamp, Nighthawk™ Platinum	12.8/12.8	65/55w	119.0/79.6	T4 5/8	P26.4t	C-8/C-8	1	3.54	320/150	4,306
22961			48			**KPR102**	Flashlight-2D Krypton	2.4	.7A	3.0	B3 1/2	Single Contact Miniature Flanged	C-2R	0.25	48.00	15	116
23153			48			**KPR 113**	Flashlight-4D Krypton	4.8	.47A	4.1	B3 1/2	Single Contact Miniature Flanged	C-2R	0.25	1.25	20	116
23306			48			**P21W**	Auto, ECE.Stop	13.5	1.85A	36.6	S8	Single Contact Bayonet (BA15s)	C-6	1.25	2.00	250	
89247			48			**P21W NH**	Auto, Nighthawk™	13.5	1.85A	36.6	S8	Single Contact Bayonet (BA15s)	C-6	1.25	2.00		
20695		**30852**	48		1000	**P21W LL**	Auto, Long Life	13.5	1.85A	36.6	S8	Single Contact Bayonet (BA15s)	C-6	1.25	2.00	300	
67896			48			**P21W LL**	Auto, Long Life	13.5	1.85A	36.6	S8	Single Contact Bayonet (BA15s)	C-6	1.25	2	300	
	40778			10		**P21W 24V**	Bus, Stop	28.0	1.0A	36.6	S8	Single Contact Bayonet (BA15s)	C-6	1.25	2.00	150	
27561			48			**P21/4W**	Auto, ECE, Stop, tail	13.5/13.5	1.85/.37A	35.0/1.19	S8	Double Contact Index (BAY15d)	C-6/C-6	1.25	2.00	100/100	
23303		**30856**	48		1000	**P21/5W**	Auto, ECE, Stop, tail	13.5/13.5	1.85/.44	35.0/2.78	S8	Double Contact Index (BAY15d)	C-6/C-6	1.25	2.00	250 1000	
67894			48			**P21/5WLL**	Auto, ECE, Stop, tail, Long Life	13.5/13.5	1.85/.44	35.0/2.78	S8	Double Contact Index (BAY15d)	C-6/C-6	1.25	2	500/2000	
		21274			1000	**P21/5W LL**	Auto, Long Life	13.5/13.5	1.85/.44	35.0/2.78	S8	Double Contact Index (BAY15d)	C-6/C-6	1.25	2.00	600/3000	
89246			48			**P21/5W NH**	Auto, Nighthawk™	13.5/13.5	1.85/.44	35.0/2.78	S8	Double Contact Index (BAY15d)	C-6/C-6	1.25	2.00		
	27222	**23037**		10	1000	**PC168**	Auto Instrument	14.0	.35A	3.0	T3 1/4	Printed Circuit Socket	C-2F	0.45	1.11	1500	
	27221			10		**PC194**	Auto Instrument	14.0	.27A	2.0	T3 1/4	Printed Circuit Socket	C-2F	0.45	1.11	2500	
12675	**25181**		48	50		**PR2**	Flashlight-2D cells	2.4	.5A	0.8	B3 1/2	Single Contact Miniature Flanged	C-2R	0.25	1.25	15	116
12676	**25193**		48	50		**PR3**	Flashlight-3D cells	3.6	.5A	1.5	B3 1/2	Single Contact Miniature Flanged	C-2R	0.25	1.25	15	116
12677			48			**PR4**	Flashlight-2C cells	2.3	.27A	0.4	B3 1/2	Single Contact Miniature Flanged	C-2R	0.25	1.25	15	116
	25222			50		**PR6**	Flashlight-2D cells	2.5	.3A	0.5	B3 1/2	Single Contact Miniature Flanged	C-2R	0.25	1.25	30	116
	25235			50		**PR7**	Flashlight-3D cells	3.7	.3A	0.9	B3 1/2	Single Contact Miniature Flanged	C-2R	0.25	1.25	30	116
	25252			50		**PR12**	Flashlight-5D cells	6.0	.5A	3.1	B3 1/2	Single Contact Miniature Flanged	C-2R	0.25	1.25	15	116
12681	**25262**		48	50		**PR13**	Flashlight-4F cells	4.8	.5A	2.2	B3 1/2	Single Contact Miniature Flanged	C-2R	0.25	1.25	15	116
	25289			50		**PR18**	Flashlight-6D cells	7.2	.55A	5.5	B3 1/2	Single Contact Miniature Flanged	C-2R	0.25	1.25	3	116
41370		**18294**	48		500	**PY21W**	Auto, ECE, Stop, Tail, Amber	13.5	1.85A	22.3	S8	Single Contact Bayonet (BA15s)	C-6	1.25	2.00	250	
23314			48			**R5W**	Auto, ECE, GE2619	13.5	5W	4.0	G6	Single Contact Bayonet (BA15s)	C-2R	0.75	1.47		
23765		**30859**			2000	**R5WLL**	Auto, ECE	13.5	5W	4.0	G6	Single Contact Bayonet (BA15s)	C-2R	0.75	1.47	500	
23322		**35417**	48		2000	**R10W**	Auto, ECE, GE2641	13.5	10W	10.0	G6	Single Contact Bayonet (BA15s)	C-2R	0.75	1.47	400	
23318			48			**T4W**	Auto, ECE, GE2662	13.5	4W	2.8	T2 3/4	Miniature Bayonet (Ba9s)	C-2R	0.59	1.08	450	
	12756			50		**TEL/6PSB**	Telephone Indicator	6.0	.14A	550.0	T2	Tel. Slide No. 5	C-2V		1.11	20000	80
	12760			50		**TEL/12PSB**	Telephone Indicator	12.0	.17A	2000.0	T2	Tel. Slide No. 5	C-2F		1.11	12000	80
	29001			50		**TEL/24E2**	Telephone Indicator	24.0	.035A	600.0	T2	Tel. Slide No. 3	C-2F		1.69	7000	80
	12071			50		**TEL/24PSB**	Telephone Indicator	24.0	.073A	3000.0	T2	Tel. Slide No. 5	C-2F		1.11	10000	80
	12761			50		**TEL/28MB**	Telephone Indicator	28.0	.04A	0.3	T2 1/2	Miniature Bayonet (Ba9s)	C-2F		1.19	5000	80
	12072			50		**TEL/28PSB**	Telephone Indicator	28.0	.04A	1600.0	T2	Tel. Slide No. 5	C-2F		1.11	5000	80
	29041			50		**TEL/48C2**	Telephone Indicator	48.0	.035A	750.0	T2	Tel. Slide No. 3	C-2F		1.69	5000	80
	12075			50		**TEL/48PSB**	Telephone Indicator	48.0	.05A	1800.0	T2	Tel. Slide No. 5	C-7A		1.11	10000	80
	12076			50		**TEL/60MB**	Telephone Indicator	60.0	.05A	0.7	T2 1/2	Miniature Bayonet (Ba9s)	C-7A		1.19	7500	80
	12077			50		**TEL/60PSB**	Telephone Indicator	60.0	.05A	1800.0	T2	Tel. Slide No. 5	C-7A		1.11	7500	80

For the most up-to-date product information, see www.gelighting.com.
All footnotes, warning and caution notices found at the end of this section (page 8-34).

Miniature Lamps (continued)

Order Code			Case Qty			GE Lamp No.	Primary Application	Volts	Amps (A) or Watts (W)	MSCP	Bulb	Base	Filament	LCL (in)	MOL (in)	Rated Life (hrs)	Footnotes, Warning and Caution Notices
Blister	Unit	Bulk	BP	Unit	Bulk												
	12078			50		TEL/120MB	Telephone Indicator	120.0	.025A	0.4	T2 1/2	Miniature Bayonet (Ba9s)	CC-7A		1.19	7500	80
	12080			50		TEL/120PSB	Telephone Indicator	120.0	.025A	1000.0	T2	Tel. Slide No. 5	CC-7A		1.11	7500	80
27562		35030	48		2000	W3W	Auto, ECE	13.5	3W	1.8	T3 1/4	Wedge (W2.1x9.5d)	C-2V	0.50	1.06	1000	
27563		28759	48		2000	W5W	Auto, ECE	13.5	5W	4.0	T3 1/4	Wedge (W2.1x9.5d)	C-2V	0.50	1.06	300	
67895			48			W5WLL	Auto, ECE, Long Life	13.5	5W	4	T3 1/4	Wedge (W2.1x9.5d)	C-2V	0.5	1.06	600	
		26353			1000	W16W	Auto, ECE	13.5	16W	24.6	T5	Wedge (W2.1x9.5d)	C-2F	0.81	1.49	250	121
		20280			1000	W16W	Auto, ECE	13.5	16W	24.6	T5	Wedge (W2.1x9.5d)	C-2F	0.81	1.49	250	121
		20279			1000	WY5W	Auto, ECE, Amber	13.5	5W	3.0	T3 1/4	Wedge (W2.1x9.5d)	C-2V	0.50	1.06	300	

Sealed Beam and Automotive Lamps

Product Code		Quantity		GE Lamp No.	Bulb	Applications	Volts	Watts	MBCP	Base	MOL (in)	Rated Life (hrs)	Spread to 10% MBCP		Footnotes, Warning and Caution Notices
Unit	Bulk	Unit	Bulk										Horizontal	Vertical	
18511		6		4000	PAR46	Headlamp-Low beam	12.8/12.8	38/60	SAE	3 Contact Lugs	4.00	200/320			4
24327		12		4013	PAR46	Tractor, Flood	6.4	25	800	Screw Terminals	3.75	300	80°	20°	
	24338		60	4014	PAR36	Emergency Building Light	6.4	18	1500	Screw Terminals	2.75	200	50°	25°	
24369		12		4019	PAR46	Tractor	6.2	30	1200	Screw Terminals	3.75	300	Trapezoidal		23
38418		12		4040	PAR46	Truck, Low beam	12.8/12.8	38/60	SAE	3 Contact Lugs	4.00	300/500			4
39585	39586	12	60	4042	PAR36	Emergency Building Light	6.4	12	1100	Screw Terminals	2.75	150	45°	20°	
40588	40589	12	60	4044	PAR36	Emergency Building Light	12.0	12	1100	Screw Terminals	2.75	150	50°	25°	
10540	10541	12	60	4044-1	PAR36	Emergency Building Light	12.0	12	1100	Slip-on Terminals	2.75	150	50°	25°	
25051		12		4313	PAR36	Aircraft Landing	13.0	250	140000	Screw Terminals	2.75	25 h	16°	7°	302
39366	39367	12	60	4340	PAR36	Electric Truck Worklight	48.0	80	2500	Slip-on Terminals	2.75	400	Trapezoidal		15
39362	39363	12	60	4350	PAR36	Electric Truck Worklight	36.0	60	2100	Slip-on Terminals	2.75	400	Trapezoidal		15
12961		12		4402A	PAR36	CIM Signal	28.0	50	1000	Screw Terminals	2.75	400	50°	25°	
24425	24423	12	60	4405	PAR36	Spotlamp	12.8	30	50000	Screw Terminals	2.75	100	6°	5°	167
24430	24428	12	60	4406	PAR36	Tractor ,Flood	12.8	35	600	Screw Terminals	2.75	300	80°	30°	4
24439		12		4410	PAR36	Backup, Tractor Flood	12.8	35	600	Screw Terminals	2.75	300	80°	30°	4
24448	24443	12	60	4411	PAR36	Tractor	12.8	35	3000	Screw Terminals	2.75	300	Trapezoidal		4
37889	37890	12	60	4411-1	PAR36	Tractor	12.8	35	3000	Slip-on Terminals	2.75	300	Trapezoidal		4
29040		12		4411-3	PAR36	Tractor	12.8	35	3000	Combination	2.75	300	Trapezoidal		4
24454	24453	12	24	4412	PAR46	Fog	12.8	35	11000	Screw Terminals	3.75	300	40°	7°	167
24460	24459	12	24	4412A	PAR46	Fog, yellow	12.8	35	8800	Screw Terminals	3.75	300	40°	7°	167
22981	24464	12	24	4413	PAR46	Tractor ,Flood	12.8	35	1100	Screw Terminals	3.75	300	80°	20°	4
24478	24477	12	60	4414	PAR36	Garden	12.8	18	1500	Screw Terminals	2.75	300	50°	25°	
24487		12		4414R	PAR36	Warning Signal, Red Lens	12.8	18	275	Screw Terminals	2.75	300	50°	25°	
22982	24490	12	60	4415	PAR36	Fog	12.8	35	9000	Screw Terminals	2.75	300	40°	5°	167
24499	24497	12	60	4415A	PAR36	Truck Fog, Amber Lens	12.8	35	7000	Screw Terminals	2.75	300	40°	5°	167
22983	24503	12	60	4416	PAR36	Narrow Spot	12.8	30	35000	Screw Terminals	2.75	300	11°	4°	
	34901		60	4416-1	PAR36	Warning Signal, Narrow Spot	12.8	30	35000	Slip-on Terminals	2.75	300	11°	4°	
24506		12		4416A	PAR36	Signal, Amber	12.8	30	26000	Screw Terminals	2.75	300	11°	4°	
24513		12		4416R	PAR36	Signal, Red	12.8	30	4000	Screw Terminals	2.75	300	11°	4°	
24531	24525	12	24	4419	PAR46	Tractor	12.8	35	1600	Screw Terminals	3.75	300	Trapezoidal		4
24539		12		4421	PAR46	Truck	13.0	100	23000	Slip-on Terminals	3.75	300	50°	7°	109,167
24542		12		4422	PAR36	Tractor	12.8	35	600	Screw Terminals	2.75	300	75° Cone		4
24572		12		4434A	PAR46	Bus, Red Lens	12.8	40	1000	Screw Terminals	3.75	100	55°	25°	
24577	24576	12	24	4435	PAR46	Pin Spotlight	12.8	30	75000	Screw Terminals	3.75	100	5°	5°	167
24582		12		4436	PAR46	Signal	12.8	35	60000	Screw Terminals	3.75	300	10°	4°	
39932	39933	12	60	4440X	PAR36	Tractor	12.8/12.8	40/40	6000/4500	3 Contact Lugs	3.00	320/320	40°/33°	7°/9°	4
39748		12		4440X-1	PAR36	Tractor	12.8/12.8	40/40	6000/4500	3 Slip-on Terminals	2.75	320/320	40°/33°	7°/9°	4
37046	37047	12	60	4446	PAR36	Emergency Building Light	12.8	25	400	Screw Terminals	2.75	300	80°	80°	
40176		12		4460X	PAR36	Tractor	12.8/12.8	40/40	0	3 Screw Terminals	2.75	320/320	22°	13°	4
24592		12		4461	PAR36	Tractor	12.8	60	6000	Screw Terminals	2.7500 cm	300	Trapezoidal		4
24596		12		4466	PAR36	Tractor	12.8	60	1000	Screw Terminals	2.75	300	80°	30°	4
24613		12		4478	PAR46	CIM	13.0	60	1600	2 Contact Lugs	4.00	800	56°	32°	4
24627		12		4502	PAR36	Headlamp Military	28.0	50	10000	Screw Terminals	2.75	400	40°	7°	
24640	24638	12	60	4505	PAR36	Aircraft Navigation	28.0	50	45000	Screw Terminals	2.75	400	11°	5°	
24650	24649	12	60	4509	PAR36	Aircraft Landing	13.0	100	110000	Screw Terminals	2.75	25	12°	6°	167
41503		12		4509X	PAR36	Marine Spotlight	13.0	100	110000	Screw Terminals	2.75	25	12°	6°	167
11524		12		4509Y	PAR36	Emergency Vehicle	13.0	100		Screw Terminals	2.75	25	12°	6°	
24654	24653	12	60	4510	PAR36	Tractor	6.4	25	800	Screw Terminals	2.75	300	80°	20°	
24663	24661	12	60	4511	PAR36	Tractor	6.2	30	2300	Screw Terminals	2.75	300	Trapezoidal		23
24673	24671	12	60	4515	PAR36	Pin Spot	6.4	30	55000	Screw Terminals	2.75	100	5°	5°	167
24678		12		4516	PAR36	Narrow Spot	6.2	30	45000	Screw Terminals	2.75	300	9°	4°	

For the most up-to-date product information, see www.gelighting.com.
All footnotes, warning and caution notices found at the end of this section (page 8-34).

Sealed Beam and Automotive Lamps (continued)

Product Code		Quantity		GE Lamp							MOL	Rated Life	Spread to 10% MBCP		Footnotes, Warning
Unit	Bulk	Unit	Bulk	No.	Bulb	Applications	Volts	Watts	MBCP	Base	(in)	(hrs)	Horizontal	Vertical	and Caution Notices
24690		12		**4519**	PAR36	Marine	13.0	100	30000	Screw Terminals	2.75	25	40°	7°	
24700		12		**4522**	PAR46	Aircraft Landing	13.0	250	290000	Screw Terminals	3.13	25	12°	10°	92,138,167
24721		12		**4530**	PAR46	Signal, Flashing	26.0	139	100000	Screw Terminals	3.75	50	11°	11°	
24726		12		**4531**	PAR46	Headlamp, Military	12.5	40	30000	Screw Terminals	3.75	400	20°	5°	
19628		12		**4532**	PAR46	Aircraft	28.0/28.0	250/150	75000/14500	Screw Terminals	3.75	100/100	12°/16°	19°/19°	
24735		12	24	**4535**	PAR46	Pin Spot	6.4	30	95000	Screw Terminals	3.75	100	20°	4°	167
24742	**24775**	12		**4537**	PAR46	Aircraft Landing	13.0	100	200000	Screw Terminals	3.13	25	11°	6°	167
40822		12		**4537-2**	PAR46	Spotlamp	13.0	100	200000	Screw Terminals	3.13	25	11°	6°	
39022		12		**4537X**	PAR46	Marine	13.0	100	200000	Screw Terminals	3.13	25	11°	6°	167
24756		12		**4541**	PAR56	Aircraft Landing	28.0	450	470000	Screw Terminals	4.50	25	15°	11°	167,302
24764		12		**4543**	PAR56	Marine	12.5	100	250000	Screw Terminals	4.50	50	9°	5°	
24768		12		**4545**	PAR56	Marine, Hand Lantern	12.0	100	225000	Screw Terminals	4.50	100	9°	5°	167
24780	**24783**	12	60	**4546**	PAR36	Hand Lantern	4.7	2	6300	Screw Terminals	2.75	100	3°	3°	
24770		12		**4546-1**	PAR36	Hand Lantern	4.7	2	6300	Slip-on Terminals	2.75	100	3°	3°	
24795		12		**4551**	PAR46	Aircraft Taxiing	28.0	250	75000	Screw Terminals	3.75	25	50°	10°	138
40576		12		**4552**	PAR64	Aircraft Landing	28.0	250	500000	Screw Terminals	3.75	25	7°	8°	138,167
24799		12		**4553**	PAR46	Aircraft Landing	28.0	250	300000	Screw Terminals	3.13	25	11°	12°	138,167
24802		12		**4554**	PAR46	Aircraft Taxiing	28.0	450	90000	Screw Terminals	3.13	25	50°	16°	302
40581		12		**4557**	PAR64	Aircraft Landing	28.0/28.0	1000/400	540000/100000	3 Screw Terminals	3.75	25 /100	25°/100°	11°/25°	138,302
40578		12		**4559**	PAR64	Aircraft Landing	28.0	600	600000	Screw Terminals	3.75	25	11°	12°	138,167
24828		12		**4570**	PAR46	Aircraft Taxiing	28.0	150	32000	Screw Terminals	3.75	300	50°	9°	
24830		12		**4571**	PAR46	CIM Flood	28.0	150	7000	Screw Terminals	3.75	300	80°	25°	
24833		12		**4572**	PAR46	Military	28.0	150	4500	Screw Terminals	3.75	300	55°	55°	
25005	**25007**	12	24	**4578**	PAR46	CIM Flood	28.0	60	1600	2 Contact Lugs	4.00	800	55°	30°	
25009		12		**4579**	PAR46	CIM Headlamp	28.0/28.0	80/60	24000/11000	3 Contact Lugs	4.00	400/400	25°/7°	25°/7°	
24859		12		**4580**	PAR46	Aircraft Landing	28.0	450	400000	Screw Terminals	3.75	10	13°	14°	302
24862		12		**4581**	PAR46	Aircraft Landing	28.0	450	400000	Screw Terminals	3.13	10	13°	14°	302
24853		12		**4582**	PAR46	Aircraft Flood	28.0	450	20000	Screw Terminals	3.75	10	50°	55°	302
24867		12		**4587**	PAR36	Aircraft Taxiing	28.0	250	40000	Screw Terminals	2.75	25 h	40°	13°	302
24873	**24871**	12	60	**4589**	PAR36	Aircraft Flood	28.0	50	5000	Screw Terminals	2.75	400	Trapezoidal		
	23509		60	**4589-1**	PAR36	Aircraft Flood	28.0	50	5000	Slip-on Terminals	2.75	400	Trapezoidal		
24882		12		**4591**	PAR36	Aircraft Landing	28.0	100	90000	Screw Terminals	2.75	25 h	12°	6°	
24887		12		**4593**	PAR36	Aircraft Refueling	28.0	50	1500	Screw Terminals	2.75	400	80°	30°	
24891		12		**4594**	PAR36	Aircraft Navigation	28.0	100	70000	Screw Terminals	2.75	300	13°	7°	
24892		12		**4595**	PAR36	Aircraft Navigation	13.0	100	60000	Screw Terminals	2.75	300	14°	6°	
24898		12		**4596**	PAR36	Aircraft Landing	28.0	250	150000	Screw Terminals	2.75	25 h	11°	12°	302
24964		12		**4626**	PAR36	Aircraft Taxiing	28.0	150	25000	Screw Terminals	2.75	300	40°	9°	
24966		12		**4627**	PAR36	Aircraft Flood	28.0	100	3000	Screw Terminals	2.75	300	80°	30°	
33284		12		**4635**	PAR46	Aircraft Landing	16.5	450	325000	Screw Terminals	3.75	25 h	14°	15°	302
19632	**16407**	12	672	**4636-3**	PAR46	Emergency Vehicle	14.0	80	90000	Combination	3.75	200	9°	7.5°	
18517		6		**4651**	165mm	Headlamp-High beam	12.8	50	SAE	2 Contact Lugs	4.80	200			4,307
18518		6		**4652**	165mm	Headlamp-Low beam	12.8/12.8	40/60	SAE	3 Contact Lugs	4.80	200/320			4,307
39906	**39907**	12	60	**4700**	PAR36	Spot/ Flood	13.0/13.0	100/100	100000/50000	3 Screw Terminals	2.75	25/250	12°/17°	7°/18°	
46427		12		**4713**	PAR36	Aircraft Logo	28.0	150	4200	Screw Terminals	2.75	300	50°	65°	
44724		12		**4752**	PAR36	CIM Flood	28.0	60	2000	Screw Terminals	2.75	800	50°	25°	
24973		12		**4800**	PAR56	Military Headlamp	28.0/28.0	50/40	SAE	3 Contact Lugs	5.00	400/400			
24980		12		**4811**	PAR36	Military Headlamp	28.0/28.0	110/55	SAE	3 Contact Lugs	3.00	400/400			
24981	**24982**	12	60	**4825R**	PAR36	CIM Stop/Tail, Red Lens	28.0/28.0	50/18	200/40	3 Screw Terminals	2.75	200/200			
24995		12		**4880**	PAR46	CIM Headlamp	28.0	60	6000	2 Contact Lugs	4.00	800			
45110	**45111**	12	576	**4912-1**	165mm	Truck Fog	12.8	50	14000	Slip-on Terminals	4.53	300	40°	7°	167,307
	45113		16	**4913-1**	165mm	Tractor Flood	12.8	50		Slip-on Terminals	4.53	400	80°	20°	4,307
45116	**16195**	12	576	**4921-1**	165mm	Truck	13.0	100	25000	Slip-on Terminals	4.53	300	40°	7°	109,307
11639		6		**5001**	PAR46	Headlamp-High beam	12.8	50		2 Contact Lugs	4.00	200			4
16152		12		**5557**	PAR64	Aircraft Landing	28.0/28.0	1000/40	540000/100000	3 Screw Terminals	3.75	50/100	11° 25°	15° 11°	138,302
25114		12		**6006**	PAR56	Headlamp-High/Low beam	6.1/6.2	50/40	SAE	3 Contact Lugs	5.00	300/500			
18519		6		**6014**	PAR56	Headlamp-High/Low beam	12.8/12.8	60/50	SAE	3 Contact Lugs	5.00	320/150			4
38416	**38607**	12	432	**6015**	PAR56	Truck-High/Low beam	12.8/12.8	50/50	SAE	3 Contact Lugs	5.00	300/500			4
25153		12		**6045**	PAR56	Signal	26.0	170	230000	Screw Terminals	4.50	100	9°	8°	
18521	**43867**	6	448	**6052**	200mm	Headlamp-High/Low beam	12.8/12.8	65/55	SAE	3 Contact Lugs	5.44	150/320			4,307
69822	**85695**	1	24		200mm	LED Sealed Beam	11/33			3 Contact Lugs	5.44	15000			
40190	**40191**	12	60	**7400**	PAR36	Signal-rotating beacon	12.8	35	33000	Slip-on Terminals	2.75	300	12°	5°	
	42385		60	**7400-1**	PAR36	Signal-rotating beacon	12.8	35	33000	Screw Terminals	2.75	300	12°	5°	
39987		12	60	**7414Y**	PAR36	Signal-Amber Lens	12.8	18	1000	Screw Terminals	2.75	300	50°	25°	
41865	**41866**	12	60	**7613**	PAR36	Emergency Building Light	6.0	8	400	Screw Terminals	2.75	50	30°	20°	
45101	**45102**	12	60	**7613-1**	PAR36	Emergency Building Light	6.0	8	400	Slip-on Terminals	2.75	50	30°	20°	

For the most up-to-date product information, see www.gelighting.com.
All footnotes, warning and caution notices found at the end of this section (page 8-34).

Sealed Beam and Automotive Lamps (continued)

Product Code		Quantity		GE Lamp No.	Bulb	Applications	Volts	Watts	MBCP	Base	MOL (in)	Rated Life (hrs)	Spread to 10% MBCP		Footnotes, Warning and Caution Notices
Unit	Bulb	Unit	Bulk										Horizontal	Vertical	
11421	**11422**	12	60	**7672-1**	PAR36	Emergency Building Light	6.0	7	350	Slip-on Terminals	2.75	50	30°	20°	
22386		6		**H4351**	140mm	Headlamp-Low beam	12.8	55	SAE	Right Angle Lugs	4.00	500			307
10211		6		**H4351LH**	140mm	Auto export only	12.8	55		Right Angle Lugs	4.00	500			307
22387		6		**H4352**	140mm	Headlamp-High beam	12.8	65	SAE	Right Angle Lugs	4.00	150			307
	18350		48	**H4360**	140mm	Tractor	12.8	38	2000	2 Right Angle Lugs	3.00	320	Trapezoidal		307
15129		12		**H4405**	PAR36	Very Narrow Spot	12.8	30	66000	Screw Terminals	2.75	100	7°	4°	167,307
	17674		60	**H4460X**	PAR36	Tractor	12.8/12.8	40/40	11000/8500	3 Screw Terminals	2.75	320/320	22°/22°	10°/13°	4,307
15133		12		**H4515**	PAR36	Very Narrow Spot	6.4	30	67000	Screw Terminals	2.75	100	5.5°	4°	167,307
18532	**45027**	6	576	**H4651**	165mm	Headlamp-High beam	12.8	50	SAE	2 Contact Lugs	4.80	200			4,307
46375		6		**H4651SB**	165mm	Headlamp-High beam	12.8	50	SAE	2 Contact Lugs	4.80	200			4,307
18533	**49810**	6	576	**H4656**	165mm	Headlamp-Low beam	12.8/12.8	35/35	SAE	3 Contact Lugs	4.80	200/320			4,307
14753		6		**H4656HO**	165mm	Headlamp-Low beam	12.8/12.8	40/55	SAE	3 Contact Lugs	4.80	200/700			4,307
45475		6		**H4656SB**	165mm	Headlamp-Low beam	12.8/12.8	40/55	SAE	3 Contact Lugs	4.80	75/200			4,307
25098		6		**H4656 NH**	165mm	Headlamp Nighthawk™	12.8/12.8	40/55	SAE	3 Contact Lugs	4.80				307
97695		6		**H4656 NHS**	165mm	Headlamp Nighthawk™ Sport	12.8/12.8	40/55	SAE	3 Contact Lugs	4.80				307
18535	**22879**	6	576	**H4666**	165mm	Headlamp-High/Low beam	12.8/12.8	65/55	SAE	3 Contact Lugs	4.80	150/320			4,166,307
28157		6		**H4666 NH**	165mm	Headlamp Nighthawk™	12.8/12.8	65/55	SAE	3 Contact Lugs	4.80				166,307
97694		6		**H4666 NHS**	165mm	Headlamp Nighthawk™ Sport	12.8/12.8	65/55	SAE	3 Contact Lugs	4.80				166,307
18536	**48533**	6	480	**H4701**	150mm	Headlamp-High beam	12.8	65	SAE	2 Lugs	3.40	150			307
18538	**48534**	6	480	**H4703**	150mm	Headlamp-Low beam	12.8	55	SAE	2 Lugs	3.40	320			307
18522		6		**H5001**	PAR46	Headlamp-High beam	12.8	50	SAE	2 Contact Lugs	4.00	200			
18523		6		**H5006**	PAR46	Headlamp-Low beam	12.8/12.8	35/35	SAE	3 Contact Lugs	4.00	200/320			4,307
19428	**19559**	6	432	**H5024**	PAR56	Truck-High/Low beam	12.8/12.8	65/42	SAE	3 Contact Lugs	5.00	400/2000			4,307
69821	**85694**	1	24		PAR56	LED Sealed Beam	11/33			3 Contact Lugs	5	15000			
19411	**19556**	6	576	**H5051**	165mm	Truck- High beam	12.8	50	SAE	2 Contact Lugs	4.80	500			4,307
19429	**19558**	6	448	**H5054**	200mm	Truck-High/Low beam	12.8/12.8	65/42	SAE	3 Contact Lugs	5.44	400/2000			4,307
19412	**19557**	6	576	**H5062**	165mm	Truck-High/Low beam	12.8/12.8	40/55	SAE	3 Contact Lugs	4.80	400/2000			4,307
	41453		448	**H5360**	140mm	Tractor Worklight	12.8	38	2000	2 Right Angle Lugs	3.00	900	Trapezoidal		307
18525		6		**H6024**	PAR56	Headlamp-High/Low beam	12.8/12.8	65/35	SAE	3 Contact Lugs	5.00	150/320			4,307
28153		6		**H6024 NH**	PAR56	Headlamp Nighthawk™	12.8/12.8	65/35	SAE	3 Contact Lugs	5.00				307
97693		6		**H6024NHS**	PAR56	Headlamp Nighthawk™ Sport	12.8/12.8	65/35	SAE	3 Contact Lugs	5.00				307
18534	**11545**	6	448	**H6054**	200mm	Headlamp-High/Low beam	12.8/12.8	65/35	SAE	3 Contact Lugs	5.44	150/320			4,307
14752		6		**H6054HO**	200mm	Headlamp-High/Low beam	12.8/12.8	65/55	SAE	3 Contact Lugs	5.44	150/700			4,307
25097		6		**H6054 NH**	200mm	Headlamp Nighthawk™	12.8/12.8	65/55	SAE	3 Contact Lugs	5.44				307
97692		6		**H6054NHS**	200mm	Headlamp Nighthawk™ Sport	12.8/12.8	65/55	SAE	3 Contact Lugs	5.44				307
43561	**43562**	12	60	**H7550**	PAR36	Hand Lantern	6.0	8	25000	Screw Terminals	2.75	50	3°	3°	307
	23541		60	**H7550-1**	PAR36	Hand Lantern	6.0	8	25000	Slip-on Terminals	2.75	50	3°	3°	307
43564	**43565**	12	60	**H7551**	PAR36	Emergency Building Lighting	6.0	8	550	Screw Terminals	2.75	50	30°	20°	307
43567		12		**H7552**	PAR36	Emergency Building Lighting	6.0	10	650	Screw Terminals	2.75	50	30°	20°	307
43570	**43571**	12	60	**H7553**	PAR36	Emergency Building Lighting	6.0	12	850	Screw Terminals	2.75	50	30°	20°	307
	43574		60	**H7554**	PAR36	Emergency Building Lighting	6.0	20	1400	Screw Terminals	2.75	50	30°	20°	307
44642	**44643**	12	60	**H7555**	PAR36	Emergency Building Lighting	12.0	8	550	Screw Terminals	2.75	50	30°	20°	307
44924	**44925**	12	60	**H7556**	PAR36	Emergency Building Lighting	6.0	6	400	Screw Terminals	2.75	50	30°	20°	307
12720	**12721**	12	60	**H7557**	PAR36	Emergency Building Lighting	12.0	12	850	Screw Terminals	2.75	50	30°	20°	307
42841	**42842**	12	60	**H7600**	PAR36	Signal, Rotating Beacon	12.8	38	60000	Screw Terminals	2.75	300	9°	4.5°	307
43576	**43577**	12	60	**H7604**	PAR36	Very Narrow Spot	12.8	50	100000	Screw Terminals	2.75	100	7°	5°	307
14616	**48580**	6	60	**H7606**	PAR36	Tractor Flood	12.8	50	1000	Screw Terminals	2.75	400	80°	30°	4,307
	17672		60	**H7607**	PAR36	Tractor Flood	12.8	65		Screw Terminals	2.75	600	Non-symmetrical		4,307
14617	**43583**	6	24	**H7609**	PAR46	Tractor Flood	12.8	50	2200	Screw Terminals	3.75	400	80°	20°	4,307
14618	**43586**	6	60	**H7610**	PAR36	Tractor	12.8	50	5200	Screw Terminals	2.75	400	Trapezoidal		4,307
49695		12		**H7612**	PAR46	Truck Fog	12.8	38	15000	Screw Terminals	3.75	450	40°	7°	307
49731	**49732**	12	60	**H7614**	PAR36	Wide Flood	12.8	50	2000	Screw Terminals	2.75	100	70°	30°	307
42838	**42839**	12	60	**H7616**	PAR36	Very Narrow Spot	12.8	38	70000	Screw Terminals	2.75	300	7°	4°	307
14619	**43589**	6	24	**H7619**	PAR46	Tractor	12.8	50	6000	Screw Terminals	3.75	400	Trapezoidal		4,307
	45058		24	**H7621-1**	PAR46	Truck	12.8	50		Slip-on Terminals	3.75	200	50°	7°	4,109,307
43591	**43592**	12	24	**H7635**	PAR46	Very Narrow Spot	12.8	50	160000	Screw Terminals	3.75	100	6.5°	4°	307
	18022		24	**H7635X**	PAR46	Spot. Shielded Filament	12.8	50	160000	Screw Terminals	3.75	100	6.5°	4°	167,307
	13426		16	**H7921-1**	165mm	Truck Special Service	12.8	50		Slip-on Terminals	4.53	200	35°	5°	4,109,307
47460	**14892**	6	16	**H7935-1**	165mm	Narrow Spot	12.8	50	175000	Slip-on Terminals	4.53	100	6.5°	3.5°	307
15767	**15763**	12	48	**H9405**	150mm	Spotlamp	12.8	50	100000	2 Right Angle Lugs	3.00	100	7°	4°	307
15769	**15768**	12	48	**H9406**	150mm	Tractor Flood	12.8	50	1350	2 Right Angle Lugs	3.00	400	70°	30°	4,307
15771	**15770**	12	48	**H9411**	150mm	Tractor Trapezoidal Beam	12.8	50	5400	2 Right Angle Lugs	3.00	400	Trapezoidal		4,307
	15772		48	**H9414**	150mm	Tractor Flood	12.8	50		2 Right Angle Lugs	3.00	400	45°	20°	4,307

For the most up-to-date product information, see www.gelighting.com.
All footnotes, warning and caution notices found at the end of this section (page 8-34).

Sealed Beam and Automotive Lamps (continued)

Product Code		Quantity		GE Lamp No.	Bulb	Applications	Volts	Watts	MBCP	Base	MOL (in)	Rated Life (hrs)	Spread to 10% MBCP		Footnotes, Warning and Caution Notices
Unit	Bulk	Unit	Bulk										Horizontal	Vertical	
16484	**16483**	12	48	**H9415**	150mm	Truck Fog	12.8	38	12000	2 Right Angle Lugs	3.00	200	45°	5°	4,307
17988		12		**H9415A**	150mm	Truck Fog, Amber	12.8	38		2 Right Angle Lugs	3.00	200	45°	5°	4,307
16976	**16978**	12	48	**H9420**	150mm	Truck, Driving	12.8	50	47000	2 Right Angle Lugs	3.00	200	15°	5°	4,307
16482	**16204**	12	48	**H9421**	150mm	Truck, Special Service	12.8	50	4000	2 Right Angle Lugs	3.00	200	45°	8°	4,109,307
22109		12		**Q4509**	PAR36	Aircraft Landing	13.0	100	140000	Screw Terminals	2.75	100	7°	7°	301
37706		12		**Q4554**	PAR46	Aircraft Taxing	28.0	450	65000	Screw Terminals	2.63	100	50°	11°	301
40579		12		**Q4559**	PAR64	Aircraft Landing	28.0	600	600000	Screw Terminals	3.75	100	12°	8°	138,301
42552		12		**Q4559X**	PAR64	Aircraft Landing	28.0	600	765000	Screw Terminals	3.75	100	11°	7.5°	139,301
41097		12		**Q4566**	PAR46	Aircraft Logo	28.0	450	150000	Screw Terminals	3.32	1000	16°	12°	301
37372		12		**Q4597**	PAR46	Aircraft Flood	28.0	450	16000	Screw Terminals	3.32	1000	60°	35°	301
34537		12		**Q4631**	PAR36	Aircraft Landing	13.0	250	80000	Screw Terminals	2.75	500	13°	12°	301
39112		12		**Q4632**	PAR36	Aircraft Logo	13.0	250	75000	Screw Terminals	2.75	500	14°	12°	301
36271		12		**Q4681**	PAR46	Aircraft Landing	28.0	450	310000	Screw Terminals	2.63	50	15°	9°	301
41452		12		**Q5551**	PAR46	Aircraft Taxing	28.0	250	60000	Screw Terminals	3.32	100	48°	12°	301
16784		12		**Q5559**	PAR64	Aircraft Landing	28.0	600	650000	Screw Terminals	3.75	200	11°	7.5°	138,301
29130	**22227**	12	60	**Q7558**	PAR36	Landscape Lighting	12.0	18	365	Screw Terminals	2.75	5000	55°	45°	301
28113		12		**Q7559**	PAR36	Landscape Lighting	12.0	18	120	Screw Terminals	2.75	5000	70°	70°	301
28111		12		**Q7560**	PAR36	Landscape Lighting	12.0	18	1900	Screw Terminals	2.75	5000	24°	23°	301
28874		12		**Q7561**	PAR36	Landscape Lighting	12.0	18	11000	Screw Terminals	2.75	5000	9°	8°	301

Footnotes

1 Special ballast required per ECE R99.

2 B3 life, not average life.

4 Life at 14 volts.

10 Life at 5 volts.

11 Filament vertical.

12 Average overall length.

13 Filament supported.

14 This lamp may not be suitable for some uses because of its excessive wattage requirements for the bulb size.

15 This lamp may not be suitable for some uses because of its limited mechanical strength.

17 Filament shielded.

23 Life at 7 volts.

32 Designed and rated for operation in supplementary cathode preheat circuits.

33 Connections of major and minor filament to base are reversed from those for automotive lamps with Double Contact Index bases. Burn base down to horizontal.

44 Life at 6.6 volts.

78 ANSI specifies .38" LCL and .63" MOL.

79 Life shown is AC voltage only. DC life will be approx. 50% of AC.

80 Light output is approx. end foot candles, not spherical MSCP.

92 Filament segments parallel.

109 Special fixture required for highway use.

110 To be used with variable load flasher in applications where bulb outage indication is not required, or with an appropriate fixed load flasher. Flash rate may be altered if used with incorrect fixed load flasher.

113 This is a flange seal wire terminal lamp. When unbased lamps such as these are handled and wired into a device, damage can be kept to a minimum by allowing sufficient clearance so that no physical strain or excessive heat is placed on the exhaust tube, exhaust tube tip, or glass seal; by taking care in mounting lamp in equipment so that any material touching the glass is compatible in thermal expansion; and by avoiding excessive tensile strain on the lead wires.

116 Life tests are performed on DC voltage only.

121 To minimize the possible adverse effects on lamp life due to excessive wattage in relationship to bulb size: Burn Base Down to Base 45° Above Horizontal. Regardless of burning position, this excessive wattage will abnormally decrease light output during lamp life.

122 This is a wire terminal lamp. The glass-to-metal seal (and tip where applicable) are susceptible to damage by thermal shock, and soldering or welding within 1⁄8" of the glass should be avoided as glass cracks and air leaks may develop. Solderability may be adversely affected by storage for an extended period in excess of six months or by storage in a high-humidity environment. Lamps with tinned leads would be subject to these storage restrictions. Nickel-plated leads are not recommended for soldering; however, their ability to be welded is not affected by these storage restrictions.

124 .028" metal pins spaced 44mm (.157") apart. GE's two-pin lamps might not be compatible with all G-4 sockets since many sockets do not provide clearance for the exhaust tip.

128 Output is minimum 1⁄4" spot at .100" from bulb top.

132 Paint may peel, craze or discolor when subjected to excessive moisture, heat, and freezing in housings with plugged drain holes or which otherwise leak or trap moisture.

138 Life Test Conditions: Cycled 5 minutes on, 5 off.

139 Life Test Conditions: Cycled 20 minutes on, 20 off.

147 Differs from ANSI.

160 Filament will generate specified MSCP in a non-shielded bulb.

162 Life based on three hours of burning per start. MSCP at 100 hours. Designed and rated for operation in supplementary cathode preheat circuits. Use these lamps with auxiliary equipment specially designed to produce proper electrical values according to established specification. For total load, add auxiliary watts to lamp watts.

166 Contact Lugs are angled.

167 Filament shielded.

All footnotes, warning and caution notices found at the end of this section (page 8-34).

Warning and Caution Notices

301

⚠ WARNING

Risk of fire

- Keep combustible materials away from lamp
- Use in fixture rated for this product

A damaged lamp emits UV radiation which may cause eye/skin injury

- Turn power off if glass bulb is broken. Remove and dispose of lamp

Pressurized lamp—unexpected rupture may cause injury, fire, or property damage

- Use in enclosed fixture rated for this product
- Do not use lamp if outer glass is scratched or broken

⚠ CAUTION

Risk of burn

- Allow lamp/fixture to cool before handling

Lamp may shatter and cause injury if broken

- Do not use lamp if outer glass is scratched or broken
- Dispose of lamp in a closed container

302

⚠ WARNING

Risk of fire

- Keep combustible materials away from lamp
- Use in fixture rated for this product

Unexpected lamp rupture may cause injury, fire, or property damage

- Avoid contact with glass during operation
- Avoid direct water/liquid contact
- Use in enclosed fixture rated for this product

304

⚠ WARNING

Risk of fire

- Keep combustible materials away from lamp
- Use in fixture rated for this product

Lamp emits UV radiation which may cause eye/skin injury

- Avoid exposure of eyes and skin to unshielded lamp

Pressurized lamp—unexpected rupture may cause injury, fire, or property damage

- Use eye protection when handling lamp
- Do not exceed rated voltage
- Do not touch glass with bare hands
- Do not use lamp if outer glass is scratched or broken
- Dispose of lamp in a closed container
- Do not turn on lamp until fully installed
- Keep away from children
- Use protective screen when handling

⚠ CAUTION

Risk of burn

- Allow lamp/fixture to cool before handling

For Best Performance

- Limit seal temperature to 350°C
- Maintain 250°C minimum bulb wall temperature
- Remove fingerprints from bulb with grease-free solvent
- Operate at design voltage

305

⚠ CAUTION

Lamp may shatter and cause injury if broken

- Do not use excessive force when installing lamp

306

⚠ WARNING

Pressurized lamp—unexpected rupture may cause injury, fire, or property damage

- Use eye protection when handling lamp
- Do not exceed rated voltage
- Avoid direct water/liquid contact
- Use in enclosed fixture rated for this product
- Do not use lamp if outer glass is scratched or broken
- Dispose of lamp in a closed container
- Do not turn on lamp until fully installed
- Keep away from children
- Use protective screen when handling

⚠ CAUTION

Risk of burn

- Allow lamp/fixture to cool before handling

307

⚠ WARNING

Pressurized lamp—unexpected rupture may cause injury, fire, or property damage

- Do not use lamp if outer glass is scratched or broken
- Dispose of lamp in a closed container

308

⚠ WARNING

Risk of fire

- Keep combustible materials away from lamp
- Use in fixture rated for this product

Pressurized lamp—unexpected rupture may cause injury, fire, or property damage

- Use eye protection when handling lamp
- Do not exceed rated voltage
- Do not touch glass with bare hands
- Do not use lamp if outer glass is scratched or broken
- Dispose of lamp in a closed container
- Do not turn on lamp until fully installed
- Keep away from children
- Use protective screen when handling

⚠ CAUTION

Risk of burn

- Allow lamp/fixture to cool before handling

For Best Performance

- Limit seal temperature to 350°C
- Maintain 250°C minimum bulb wall temperature
- Remove fingerprints from bulb with grease-free solvent
- Operate at design voltage

Warning and Caution Notices (continued)

309

⚠ WARNING

Risk of electric shock

- Turn power off before inspection, installation or removal

⚠ CAUTION

Lamp may shatter and cause injury if broken

- Wear safety glasses and gloves when handling lamp
- Do not use excessive force when installing lamp

310

⚠ WARNING

Risk of electric shock

- Turn power off before inspection, installation or removal

Risk of fire

- Use in fixture rated for this product

A damaged lamp emits UV radiation which may cause eye/skin injury

- Turn power off if glass bulb is broken. Remove and dispose of lamp

Pressurized lamp—unexpected rupture may cause injury, fire, or property damage

- Use eye protection when handling lamp
- Do not exceed rated voltage
- Do not touch glass with bare hands
- Avoid direct water/liquid contact
- Use in enclosed fixture rated for this product
- Do not use lamp if outer glass is scratched or broken
- Use only properly rated ballast
- Operate lamp only in specified position
- Do not use beyond rated life
- Do not turn on lamp until fully installed

⚠ CAUTION

Risk of burn

- Allow lamp to cool before handling
- Do not turn on lamp until fully installed
- Turn power off before installing lamp

Lamp may rupture if used on wrong ballast

- Use only properly rated ballast

Lamp may shatter and cause injury if broken

- Wear safety glasses and gloves when handling lamp
- Do not use lamp if outer glass is scratched or broken
- Dispose of lamp in a closed container
- Remove and install by grasping only plastic portion of the lamp
- Do not use excessive force when installing lamp

INSTRUCTIONS

FDA Warning

WARNING – This lamp can cause serious skin burn and eye inflammation from short-wave ultraviolet radiation if outer envelope of the lamp is broken or punctured and the arc tube continues to operate. Do not use where people will remain for more than a few minutes unless adequate shielding or other safety precautions are used. Certain types of lamps that will automatically extinguish when the outer envelope is broken or punctured are commercially available. 21 CFR 1040.30.

Hg – LAMP CONTAINS MERCURY

Manage in Accord with Disposal Laws

See: www.lamprecycle.org or 1-800-435-4448

Lamp should be installed by an automotive service specialist.

Projection Lamps

Lamp Locator

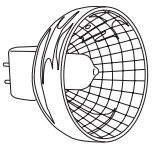

Mini Multi-Mirror®

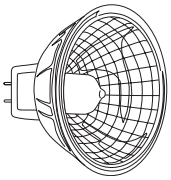

Multi-Mirror®

Quartzline® Projection Lamps

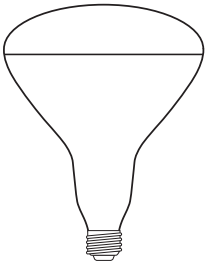

Reflector Photofloods

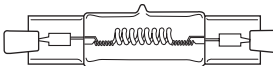

Double-Ended

Quartzline® Projection Lamps

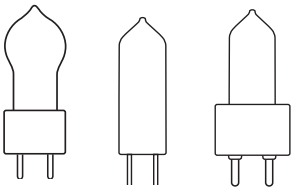

G-7 GZ9.5 | T-4 GY6.35 | T-4 GZ9.5

Quartzline® Projection Lamps – Single-Ended

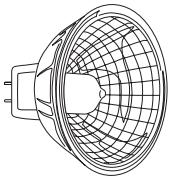

ELC
ENH
ESJ

Enlarger & Printer Lamps

Base Identification

Typical bases used on Projection lamps in this catalog are shown below along with their names and common abbreviations. Where the base is an ANSI standard type, the ANSI reference code (which is the same as the IEC base code) is also shown. ANSI reference codes conform to American National Standard C81.10. C81.30. C81.50 specifications for electric lamp bases and lampholders. Illustrations are not to scale.

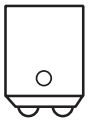

Double Contact Bayonet (D.C. Bay.) BA15d

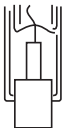

Recessed Single Contact R7

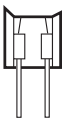

Glass 2-Pin G6.35 (.040" diam. Pins) GY6.35 (.050" diam. Pins) GZ6.35 (Reflector Quartzline® lamps)

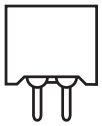

Miniature 2-Pin G5.3

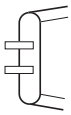

GY5.3 2-Pin (Flat Pins)

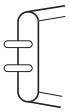

GX5.3 2-Pin (Round Pins)

2-Pin Prefocus GY & GZ9.5

Light Center Length (LCL)

Light center length is the distance from the center of the light source to the point indicated below for the lamp base used. It is a measurement to which the lamp is designed and is subject to the manufacturer's tolerances.

Base Type	LCL Reference
D.C. Bayonet	Top of base pins
2-Pin Prefocus	Bottom of base ceramic
Miniature 2-Pin	Bottom of base pins
Glass 2-Pin	Bottom of base pins

Filament Identification

The configuration of the filament in all tungsten filament lamps (including Quartzline®) is identified by a prefix letter and a suffix number. The prefix letter indicates whether the filament wire is a single coil (C) or a coiled coil (CC). The suffix number indicates the form or arrangement of the filament coil or coils on its support structure. Illustrations are not to scale.

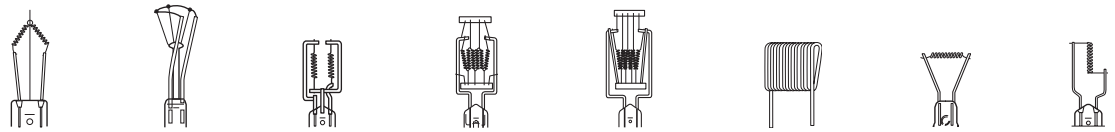

C-2V CC2-V | C-9 | 2C-8 2CC-8 | C-13 | C-13D | C-6 Oval | C-6 CC-6 | C-8 CC-8

Introduction

General Electric Projection Lamps are designed for a wide variety of applications...and now extending well beyond the original picture-taking and audio-visual projection uses into such fields as: fiber optical systems, graphic arts, video camera lights, airport runway markers, micrographics, photo printers and enlargers, medical/scientific instruments and many others.

The information contained in this section is designed to provide end-users, equipment manufacturers and lamp distributors and dealers with:

- Essential technical data on GE Projection Lamps (Quartzline®, Incandescent and Photoflood)
- Suggested substitutes for improved performance or discontinued lamps

The majority of Projection Lamps described herein are characterized by:

- Precisely manufactured, tailored filaments maximizing source brightness, optimum performance in precision optical devices
- High light-generating efficacy (lumens per watt)...to help minimize power requirements and heat generation
- Prefocus type bases, or rim-reference mounting for Multi-Mirror® lamps...to position the filament accurately in relation to the associated optics
- Design life Rated Life (per ANSI Standard)
- Lamps with internal or external reflectors (as in Multi-Mirror® and some 4-pin projection lamps) permitting high-efficiency illumination system designs with a minimum of additional optical control elements

Manufacturers and designers of equipment requiring lamps should select lamps of established design whenever possible for maximum economy, as well as for ease of replacement by their customers through regular trade channels. General Electric offers application engineering assistance to all customers for applying lamps in product design. Contact your local GE Lamp Representative for additional information or assistance.

Warning and Caution Notices Information

As with any product, certain precautions should be observed in the handling and use of GE Projection Lamps to provide optimum performance and safety. These are given in the Caution Notices that are printed on page 9-7.

Important Notice

This catalog contains accumulated data to March 2008. Additional information is constantly being uncovered through research and testing, which may modify the data given herein. This is particularly true of newer lamps. For the latest lamp design data and information, contact your General Electric Lamp Representative.

The data and suggested applications contained in this catalog, as well as any additional information our representative may be able to furnish, are for general information only and are not intended and should not be taken as representations or warranties as to the suitability of a lamp for any particular application or use in any particular equipment, nor are our representatives authorized to make any such representations or give any such warranties.

Applications and conditions of use are many and varied, and beyond our control. We cannot possibly have the same degree of knowledge that the purchaser has with respect to the design of his equipment and the conditions of its use. Therefore, it is up to the purchaser to make its own determination as to the suitability of a lamp for his intended application or use and to assume the responsibility for that determination.

General Electric desires to supply the best possible products at all times. For this reason, General Electric reserves the right to make changes in its products when it believes such charges will improve its products.

General Information

General Electric Projection Lamps are briefly described in the ANSI lamp index (page 9-7). More extensive descriptive and performance data are found in the lamp tables, which are organized as "families" of lamps with one or more features in common – such as Multi-Mirror® Quartzline®, Single-Ended Quartzline®, 4-Pin Based Incandescent, Photoflood, etc. Within each table, lamps are listed alphabetically by GE Lamp Code.

GE Multi-Mirror® Quartzline® Projection Lamps

Invented By GE For Optimized Projection System Performance, the Multi-Mirror® and its new companion, the Mini Multi-Mirror®, are reflector halogen Quartzline® lamps with innovative GE features that result in better system efficiency, screen uniformity, lamp-to-lamp consistency and relamping convenience.

Feature	Benefit	Applications
• Dichroic reflector	• Cool light beam • Efficient light reflection	• Slide Projection • Front/Rear Screen Projection
• Precise rim reference	• Quick lamp installation	• Microfilm
• Accurate snap-in alignment		• Overhead Projection
• Faceted reflector	• Efficient beam for brighter image • Uniform screen image • Precision beam control	• 16mm Movie • 8mm Movie • Film Strip
• Halogen Quartzline® lamp	• Whiter and brighter light • No bulb blackening/blistering • Constant light output through life • Stable color temperature	• Enlargers/Printers • Fiber Optics • Medical/Scientific Instruments • Video Camera Lights • Airport Runways • Display

Each GE Multi-Mirror® lamp type is optically tailored to its application. First, the appropriate type of multi-faceted reflector is determined. Then a filament tube developed, using advanced Quartzline® technology. Finally, the two are combined, using sophisticated, computerized precision-assembly techniques. The result – consistently high performance...lamp after lamp after lamp.

Headings in this catalog section

The following terms and descriptions can help you when checking Projection lamp specifications and when ordering products. Within each product line, lamps are divided into families. Within families, lamps are listed by ANSI code.

ANSI Codes:
These are 3-letter codes assigned by the American National Standards Institute. They provide a system of assuring mechanical and electrical interchangeability among similarly coded lamps from various manufacturers. General Electric uses the assigned ANSI Codes as Lamp Ordering Codes for most Projection Lamps.

Multiple-ANSI-Coded Projection Lamps:
Some GE Projection Lamps have an ordering code comprising two or more 3-letter ANSI codes – such as EM/EKS and DYS/DYV/BHC. The first code is the ANSI code, the secondary codes identify the multiple-coded lamp can directly replace. Only the first code appears on the lamp itself. Multiple-coded lamps are so-designated by General Electric for the convenience of the customer.

Maximum Overall Length (MOL):
This dimension includes the lamp bulb and all rigid parts of the base. Since the listed lengths include maximum tolerances, actual lamps are generally slightly shorter.

Bulb Shape:
Projection Lamp bulb designations use a combination of letters and numerals to indicate bulb shape and maximum diameter in eighths of an inch. For example: a "T12" bulb is Tubular-shaped and twelve-eighths of an inch, or 1-1/2" in diameter. Illustrations of typical Projector Lamps and their respective bulb designations are shown in the tables of lamp families, pages 9-2.

Light Center Length (LCL):
This dimension defines the location of the filament in relation to the base. It is measured from the geometric center of the filament to a specified point on, or plane through, the base. Light Center Length is subject to manufacturing tolerances. Reference points/planes from which LCL is measured are tabulated on page 9-2 for the various styles of lamp bases.

Base:
Projection Lamp base illustrations appear on page 9-2, along with their common trade names and abbreviations, plus their letter-number ANSI/IEC designations where applicable.

Rated Life:
Life ratings of Projection Lamps are based on closely controlled laboratory tests of lamps, at their rated voltage, over a long period of production time. Rated Life is not necessarily the same as service life; mechanical shock and vibration, voltage fluctuation, temperature and other environmental factors may result in shorter service life. As with any median value, some individual lamps will operate longer and some will operate shorter, than their Rated Life (supply voltage variation can significantly affect lamp life).

Source Size:
This is defined as the dimensions of the rectangular area, centered on the lamp axis, within which all luminous parts of the filament lie, when viewed perpendicular to the axis of the filament coil or to the plane of C-13 and C-13D filaments.

Watts (or Amps):
This column shows the rated power consumption (watts) of the lamp at its design voltage. A few lamps, in Table 5, are rated in terms of current (amperes) drawn initially at their rated voltage. The watts shown for the lamps in Table 5 are the approximate initial values for operation at rated amperes.

Order Code:
It is important to use this five-digit code when ordering to ensure that you receive the exact product you require.

Initial Lumens:
The value shown is based on spherical photometry, at rated voltage, of lamps that have been seasoned for approximately 15% (or minimum of 2 hours) or more of their rated average life.

Typical Working Distance:
For Multi-Mirror® and other reflector Quartzline® lamps, the Working Distance shown is the distance from the front surface of the reflector rim to the film plane, in the optical system for which the lamp was first designed. In most cases, it provides a uniform plane of light for the intended aperture.

Description:
This is a 3-letter or letter-number code uniquely identifying the lamp for ordering purposes. In some instances, lamps with 3-letter (ANSI) codes are offered in more than one design voltage, in which case the voltage required should also be specified when ordering.

Color Temperature:
The radiation within the visible spectrum from tungsten filament lamps is similar in spectral distribution to that from a "blackbody" at specific color temperatures. The Color Temperatures shown are approximate initial values in degrees Kelvin (K) for lamps operated at rated voltage.

Volts:
The voltage shown is the design voltage of the lamp, on which the life and wattage ratings are based. Lamps are available only in the design voltage(s) shown. When ordering lamps listed for more than one voltage, be sure to specify the voltage required (supply voltage variation can significantly affect lamp life).

CBCP (Center Beam Candlepower):
For reflector type lamps. Center Beam Candlepower is the intensity (candelas) at the center or maximum intensity of the beam.

Operating Position:
For good performance, lamps must be used within specified limitations on operating position. The following abbreviations are used in the lamp tables to indicate these limits:
BD = Base Down. Operate only vertical, base down.
HD = Base Down to Horizontal. Do not operate base above horizontal.
H22 = Operate base down to 22° base up.
U = Operate in any position.

Case Quantity:
Number of product units packed in a case.

Filament Design:
Typical filament configurations for Projection Lamps are shown on page 9-3, along with an explanation of the filament designation system.

Warning and Caution/Footnote:
See page 9-7 for explanation.

Additional Information:
Typical application and/or other important information.

Bulb Shape	Base	Watts	Order Code	Description	Volts	Case Qty	Filament Design	MOL (in)	LCL (in)	Rated Life (hrs)	Initial Lumens	Color Temp K	CBCP	Burn Position	Additional Information	Warning and Caution/ Footnote	Typical Working Distance	Source Size (W x H)
Quartzline® Multi-Mirror® Reflectors																		
MR-11 Faceted Dichroic Reflector. 1-3/8" Diameter (35mm). Table 1.																		
MR11	GZ4 2-Pin	28	30894	FLS	12	10	CC-6	1.38		1000		3000		HD	Microfilm	A		

FLS

ANSI Code.

Projection Lamps

Bulb Shape	Base	Watts	Order Code	Description	Volts	Case Qty	Filament Design	MOL (in)	LCL (in)	Rated Life (hrs)	Lumens Initial	Color Temp K	CBCP	Burn Position	Additional Information	Warning and Caution/ Footnote	Typical Working Distance	Source Size (W x H)
Quartzline® Multi-Mirror® Reflectors																		
MR-16 Faceted Dichroic Reflector, 2" Diameter (51mm)																		
MR16	GX5.3 2-Pin	150	43537	DDL	20	20	C-6	1.75		500		3150		HD	Microfilm	A	7.75	
		85	43950	DED	13.8	20	C-6	1.75		1000		3150		HD	Microfilm	A	6.50	
	GX5.3 2-Pin	150	35200	EKE	21	20	CC-6	1.75		250		3250		HD	8mm Projection, Fiber Optics	A	1.75	
		250	37462	ELC	24	20	CC-6	1.75		50		3400		HD	Fiber Optics, Color Printer	A	1.25	
		250	15377	ELC/500	24	20	CC-6	1.75		500		3350		HD	Fiber Optics, Disco	A	1.25	
	GX5.3 2-Pin	50	25475	ENL	12	20	C-6	1.75		4000		3050		HD	Fiber Optics, Display Lighting	A	1.50	
	GY5.3 2-Pin	360	41705	ENX	82	20	CC-8	1.75		75		3300		HD	Overhead Projection	A	11.75	
			19475	ENX-5	86	20	CC-8	1.75		75		3300		HD	Overhead Projection	A		
	GX5.3 2-Pin	42	41729	EPT	10.8	20	C-6	1.75			10000		2900	HD	Fiber Optics	A	1.50	
	GX5.3 2-Pin	50	14887	FML	13.8	20	CC-6	1.75		1000		3150		HD	Microfilm	A	8.44	
	GY5.3 2-Pin	410	21613	FXL	82	20	CC-8	1.75		38		3300		HD	Overhead Projection	A	11.75	
Quartzline® Single-Ended																		
Applications: Projection, Microfilm, Studio, Etc.																		
G7	GZ9.5 2-Pin Pf	650	33250	DYR	240	24	2CC-8	2.50	1.44	50	16500	3200		U		A		.45 x .45
		600	32955	DYS/DYV/ BHC	120	24	CC-6	2.50	1.44	75	17000	3200		HD		A		.50 x .25
T3.5	G5.3 2-Pin	30	37346	DZA	10.8	24	C-6	2.00	1.06	400	530	3100		HD		A		.15 x .05
T4	G6.35 2-Pin	250	14874	EHJ	24	100	C-6 Oval	2.25	1.31	50	8000	3400		HD		A		.30 x .15
T3.5	G5.3 2-Pin	360	12696	EYB	82	24	CC-8	2.25	1.25	75	10000	3300		HD		A		
T3	GY6.35 2-Pin	100	14876	FCR	12	100	C-6 Oval	1.75	1.18	50	2800	3300		HD		A		
T4	G6.35 2-Pin	150	13598	FCS	24	100	C-6 Oval	2.00	1.18	50	4500	3300		HD		A		
T3	GZ9.5 2-Pin Pf	100	35321	FDT	12	24	C-6 Oval	2.12	1.06	50	2900	3300		HD		A		
T4	G6.35 2-Pin	150	36878	FDV	24	24	C-6 Oval	2.00	1.19	100	4300	3050		U		A		
Quartzline® Single-Ended – Amp Rated																		
T4	GZ9.5 2-Pin	120	10099	EVV	6.6A	24	C-6 Oval	2.50	1.54	500	3150	3200		BD	Airport	A		
		150	11427	EWR	6.6A	24	C-6 Oval	2.50	1.54	500	4100	3200		BD	Airport	A		
T3.5	GZ9.5 2-Pin	30	11478	EXL	6.6A	24	C-8	1.75	1.00	1000	375	2900		HD	Airport	A		
		45	11482	EXM	6.6A	24	C-8	1.75	1.00	1000	750	2950		HD	Airport	A		
T4	GZ9.5 2-Pin	200	15243	EZL	6.6A	24	C-6 Oval	2.50	1.54	500	5000	3100		BD	Airport	A		
Quartzline® Double-Ended Projection																		
T5	R7s	1000	38311	ETT	120	24	CC-8	3.75		70		3350		U	Spec. (PH1000H)	A		
Incandescent Projection																		
Double Contact Bayonet Base, ANSI Base Designation: BA15D																		
T8	D. C. Bay.	50	29171	CAX	118	24	CC-2V	3.13	1.38	50	775	2875		BD	Optical Projection			
		50	29169	CAX	130	24	CC-2V	3.13	1.38	50	775	2875		BD	Optical Projection			
Photoflood																		
Reflector																		
R40	Medium	500	30151	DXB	120	24	CC-2V	6.63		6		3300	45000		Spot Beam, 15 Degrees	A, Q		

For the most up-to-date product information, see www.gelighting.com. To convert inches to millimeters, multiply by 25.4.
All footnotes, warning and caution notices found at the end of this section (page 9-7).

Footnotes

Q Approximate beam spread to 1/2 center-beam intensity.

Warning and Caution Notices

A

⚠ Warning

Risk of electrical shock

- Turn power off before inspection, installation or removal

Risk of fire

- Keep combustible material away from lamp
- Use in enclosed fixtures rated for this product

Pressurized lamp – unexpected rupture may cause injury, fire, or property damage

- Do not exceed 110% of rated voltage
- Avoid direct water/liquid contact
- Use in enclosed fixtures rated for this product
- Do not use lamp if outer glass is scratched or broken

Caution

⚠ Risk of burn

- Allow lamp/fixture to cool before handling
- Turn off power before installing lamp

Lamp may shatter and cause injury if broken

- Do not use lamp if outer glass is scratched or broken
- Dispose of lamp in enclosed container

ANSI Coded GE Projection Lamps Index

Order Code	Description	Watts	Volts	Bulb Shape	Base	Page No.
BHC USE DYS/DYV/BHC						
29171	CAX	50	118	T8	D. C. Bay.	9-6
29169	CAX	50	130	T8	D. C. Bay.	9-6
DAB USE CZX/DAB DAK USE DAT/DAK						
43537	DDL	150	20	MR16	GX5.3 2-Pin	9-6
43950	DED	85	13.8	MR16	GX5.3 2-Pin	9-6
DLG USE DLS/DLG/DHX						
30151	DXB	500	120	R40	Medium	9-6
33250	DYR	650	240	G7	GZ9.5 2-Pin Pf	9-6
32955	DYS/DYV/BHC	600	120	G7	GZ9.5 2-Pin Pf	9-6
DYV USE DYS/DYV/BHC						
37346	DZA	30	10.8	T3.5	G5.3 2-Pin	9-6
14874	EHJ	250	24	T4	G6.35 2-Pin	9-6
EJN USE ELD/EJN						
35200	EKE	150	21	MR16	GX5.3 2-Pin	9-6
EKS USE EMM/EKS						
37462	ELC	250	24	MR16	GX5.3 2-Pin	9-6
15377	ELC/500	250	24	MR16	GX5.3 2-Pin	9-6
ENA USE EKP/ENA ENC USE ENW/ENC						
25475	ENL	50	12	MR16	GX5.3 2-Pin	9-6
41705	ENX	360	82	MR16	GY5.3 2-Pin	9-6
19475	ENX-5	360	86	MR16	GY5.3 2-Pin	9-6
41729	EPT	42	10.8	MR16	GX5.3 2-Pin	9-6
38311	ETT	1000	120	T5	R7s	9-6
10099	EVV	120	6.6A	T4	GZ9.5 2-Pin	9-6
11427	EWR	150	6.6A	T4	GZ9.5 2-Pin	9-6
11478	EXL	30	6.6A	T3.5	GZ9.5 2-Pin	9-6
11482	EXM	45	6.6A	T3.5	GZ9.5 2-Pin	9-6
12696	EYB	360	82	T3.5	G5.3 2-Pin	9-6
EZJ USE EZF/EZJ						
15243	EZL	200	6.6A	T4	GZ9.5 2-Pin	9-6
FBD USE FBG/FBD						
14876	FCR	100	12	T3	GY6.35 2-Pin	9-6
13598	FCS	150	24	T4	G6.35 2-Pin	9-6
FDS USE DZE/FDS						
35321	FDT	100	12	T3	GZ9.5 2-Pin Pf	9-6
36878	FDV	150	24	T4	G6.35 2-Pin	9-6
FKT USE EYH/FKT						
14887	FML	50	13.8	MR16	GX5.3 2-Pin	9-6
21613	FXL	410	82	MR16	GY5.3 2-Pin	9-6

Notes

Table of Contents
T8 Instant Start Ballasts

See page E-1 for warranty information.

Understanding the New Fluorescent Ballast Rule, EPCA 10 CFR 430

In 2008 Congress began the Rulemaking for Fluorescent Ballasts, and as it is a 3-year process, the New Rule was completed in November 2011, and will come into effect in November of 2014. The current rule covered only the Federally Regulated T12 lamp ballast for 4-foot and 8-foot T12 lamps and was based on Ballast Efficacy Factor (BEF) as the performance metric. The BEF measurement is a complicated photometric process with many opportunities for error in the measurements. In order to improve the accuracy of the rating process, a new metric was developed, Ballast Luminous Efficiency (BLE), a purely electrical measurement without the error prone photometric measurements.

The New Rule also expands the number and types of ballasts that will be under Federal Regulation. Currently, until November 2014, only the T12 types mentioned are under Regulation. In November 2014, many more types of ballasts will be under Regulation, including most T8 and T5 ballasts. Sign and Residential ballasts are also included in the New Rule. Ballast manufacturers are required to report the performance of these ballast types to the Department of Energy and certify that they meet the BLE requirements for the specific ballast types.

The test plan for the BLE metric measurement is based on the ballast operating a known lamp load. The total discharge or output power is measured and applied to an equation for the specific ballast type. The equation provides the minimum performance limit. The ratio of the output power divided by the input power defines the ballast efficiency, and the ballast efficiency must be greater than the calculated limit for the ballast to be compliant.

One other change that is coming is a new way to determine Ballast Factor, or the light output level of the ballast. The present way is a photometric ratio measurement requiring a controlled environment and reference ballasts and lamps. In the new method, a purely electrical measurement, the output the average output power for one lamp is compared to an Industry Standard (ANSI) rated lamp power. The ballast factor is simply the ratio of the measured power divided by the ANSI rated power.

The familiar BEF value can be calculated as it always has been, dividing the Ballast Factor by the input power. However, an existing BEF cannot be "back calculated" to arrive at an input wattage or ballast factor.

The increased performance requirements of the New Rule will cause some ballasts to be taken off the market. Many GE ballasts already meet the new 2014 requirements and will continue to be available for sale as the Rule becomes effective.

See page E-1 for warranty information.

Understanding T8 Fluorescent Ballasts

A comprehensive range of solutions...from GE, the name you trust.

GE introduced the first fluorescent ballast more than 60 years ago. Today we are providing high-frequency electronic ballasts for almost every fluorescent application.

With our UltraMax® and UltraStart® ballasts, we are bringing you the future in ballast performance.

GE revolutionizes lighting again with breakthrough technology. Our patented UltraMax® instant-start and UltraStart® programmed start electronic ballasts transform the power of light into efficiency and savings from store shelves to the installation site. The foundation of the "Ultra" family of ballasts starts with its high efficiency ratings. High efficiency ballasts are a minimum of 90% efficiency with some ballasts nearly 95% efficient which means the ballast only consumes 5-10% of the total system power. These high efficiency ballasts exceed minimum high efficiency standards as established by almost all energy advocate groups, utility rebate programs and the NEMA Premium® ballast program. The ballasts are marked with the Ultra brand as well as the NEMA Premium® ballast mark. These ballasts have multi-voltage control (MVC), which automatically adjusts to handle voltage from 120V through 277V. That cuts the ballast models you need to stock from 40 down to 13, which can dramatically reduce inventory carrying costs. UltraMax® ballasts have ArcGuard Protection, too, with a UL Type CC Anti-Arc Rating. Plus, they're ultra-lamp-friendly, with a low lamp current crest factor of 1.4 for optimal lamp performance. Both UltraMax® and UltraStart® have anti-striation control for better light quality with no lamp striations (spiraling). And the small, low-profile design of these ballasts makes retrofits effortless at the job site. Also unique to our programmed start UltraStart® ballasts is parallel lamp operation which means that if one lamp fails the others remain on, and quick starting times of less than 700 milliseconds which is necessary in avoiding delays with automatic sensors.

GE Fluorescent Ballast Types

Electronic Instant Start

The most common fluorescent ballast is the instant start and is used typically in long 3 to 10-hour lamp cycle applications. These ballasts are energy efficient and can deliver 20% to 40% energy savings when installed with energy-efficient lamps in building retrofits. These ballasts deliver >550 open circuit volts when starting lamps and operate lamps at high frequencies which offers flicker-free operation and better lamp efficiencies.The ballasts are significantly quieter than conventional magnetic ballasts and are backed by GE's ultra system 5-year ballast limited warranty and extended lamp warranties.

UltraMax® Professional Series

A family of high-efficiency GE T8 instant-start electronic linear fluorescent ballasts designed to optimize GE's T8 Ultra lamps for optimal system energy savings. UltraMax® ballasts have a low lamp current crest factor and virtually "read" and adapt to incoming voltage from 108V to 305V. Other features include UL Type CC Anti-Arc Rating and anti-striation control to eliminate lamp striations and spiraling. These ballasts are offered in ballast factors: low wattage (.77), normal light (.87), normal-high (N+) (1.0) and high (>1.15).

UltraMax® General Series

Offered in dedicated or multi-volt (120-277V), these high-performance T8 instant-start ballasts also meet minimum efficiency requirements as established with the NEMA Premium® ballast program. These ballasts are offered in ballast factors: low wattage (.77), normal light (.87), and high (>1.15).

Programmed Start

Programmed Start electronic ballasts have a lamp starting method that preheats lamp filaments before applying an open circuit voltage (OCV) to start the lamp. Use Programmed Start ballasts to ensure long lamp life when turning lamps on and off more than five times in a day or in conjunction with any automatic light control or sensor. This type of starting circuit keeps lamp-end blackening to a minimum and improves lamp life performance, especially in applications where the lamps are frequently switched on and off.

UltraStart®

UltraStart® is a family of high-efficiency GE Programmed Start electronic linear fluorescent ballasts that also exceed NEMA Premium® ballast efficiency requirements but are designed to optimize GE's T8 Ultra lamps in frequently switched applications. Instant start ballasts provide 7,000-13,000 starts before 50% lamp failure. UltraStart® provides greater than 100,000 starts before 50% lamp failure. UltraStart® ballasts provide the same energy savings and convenience of instant start ballasts but with the longer lamp life offered a programmed start ballast. These ballasts are offered in ballast factors: programmed start x-low wattage (XL) (.60), low wattage (.71), normal light (.87), and high (>1.15).

Ballast Date Codes

Date Codes

GE electronic ballast manufacturing date codes are located on the upper right-hand corner of the label. The code lists the month, year and day of manufacture. A typical code is C16-073, where the month is listed as A (January), B (February), C (March) as in this code followed by the year 16 (2016) and the date of manufacture 073 (the 73rd day of 2016).

Ballast Life

GE electronic ballasts are designed and manufactured to an average life expectancy of 60,000 hours of operation at maximum rated case temperatures. As a rule of thumb, ballast life is doubled for every 10C reduction in ballast case temperature. However there are other variables such as transients, voltage sags and swells, ambient temperature, etc., which affect ballast life as well.

See page E-1 for warranty information.

Instant Start vs. Rapid Start Sockets

When using programmed start or dimming ballasts in fixtures, sockets must be 2-pin rapid start type. Fixtures with T8 instant start ballasts must use jumpered rapid start sockets or shunted lamp holders (internal to the lamp holder) that bridge the lamp bi-pins together into one contact on each side of the lamp. If retrofitting from a instant start ballast fixture with shunted sockets to a dimming or programmed start ballast, rapid start type sockets must be used to properly start lamps and maintain rated lamp life.

GE Ballast Electronic nomenclature

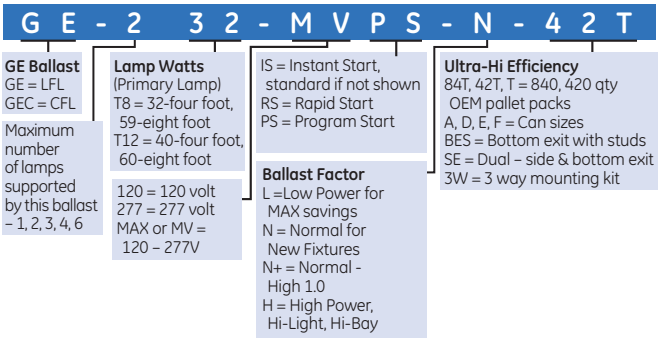

Understanding Fluorescent Systems

GE introduced the first practical fluorescent lamp in 1938. All fluorescent lamps operate on electrical control gear called a ballast. Today, electronic ballasts have continued to replace the magnetic designs that were common previously. The 4-foot T8 lamp on an electronic ballast is the most common system. The generic version of this lamp is called the F32T8 and in recent years, energy saving reduced wattage lamps like the F28T8 and the F32T8/25W have become popular. These lamps typically operate on Instant Start (IS) or Programmed Rapid Start (PRS) ballasts and both types of ballasts are available in a variety of ballast factors ranging from 0.60 to 1.18.

Ballast Factor

The F32T8 lamp has a "nominal" wattage of 32 watts. Nominal means "in name only" because there are no ballasts commercially available that will operate this lamp at 32 watts! The "N" or "Normal" ballast factor ballast operates this at around 26 watts while the "L" operates the lamp around 23 watts; the "N+" operates it around 29 watts and the "H" around 34 watts. Electronic ballasts operate lamps at high frequencies of greater than 20 kHz, which results in more efficient lamp operation than at 60 kHz, like the magnetic ballasts they replace. This results in a lamp that is more efficient than the 32 nominal watts.

Unlike HID lamps and Incandescent/Halogen lamps which are designed for optimum performance at a specific wattage, linear fluorescent lamps can be operated over a reasonably wide range without sacrificing performance, such as life or efficacy. Therefore, there is no "optimum" wattage for a lamp, only a range. The F32T8 lamp can produce between 60% to 118% of its catalog lumens when operated on a ballast with a ballast factor of 0.60 to 1.18. The higher the operating wattage, the higher the lumen output within this range.

Consumers have a choice among ballasts, depending on how much light they desire from the lamp and how much energy they are trying to save. The ballast specification from the ballast manufacturer provides the "input wattage" of the ballast. A two lamp electronic ballast with input watts of 56 watts (BF of 0.88) is using 56 watts of power to operate 2 lamps--typically 26 watts in each lamp and 4 watts in the ballast. In contrast, a ballast with BF of 1.18 will consume 76 watts but also produce more light.

An engineer or designer will choose a high BF when trying to "squeeze" as much light as possible from the lamp, e.g. in high-bay applications or when they are trying to reduce the number of lamps used in the area. A lower BF reduces the light output and wattage of each lamp, so that more lamps (and more fixtures) are needed to achieve a certain footcandle level in the same area. Of course more fixtures also means closer spacing and more uniform lighting.

It must be noted that ballast factor (and any measure involving BF) requires a measurement of lamp lumens and is, therefore, not a pure electrical measurement. The uncertainty and variation associated with individual lamp performance is present in these measures.

Actual Light Output of Lamp = (Catalog Lumens) x (Ballast Factor)

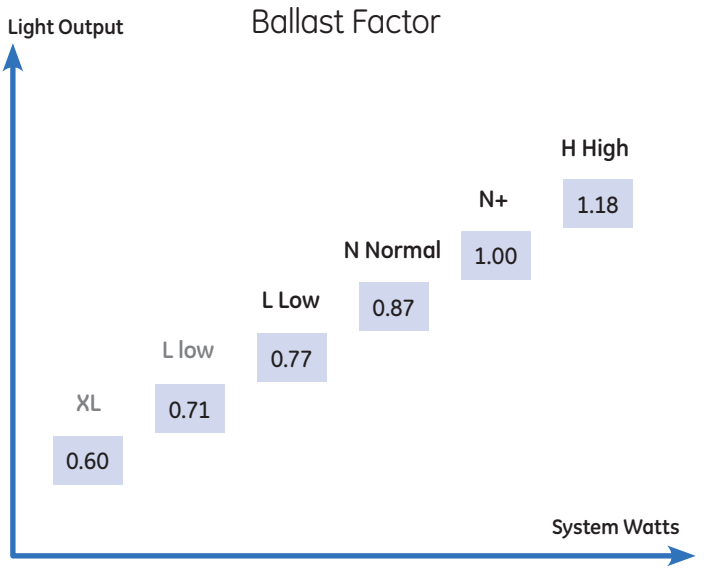

See page E-1 for warranty information.

Instant Start and Programmed Rapid Start Ballasts

There are two major families of ballasts. While the current limiting function is the same, these ballasts differ in how they start the lamp.

Instant Start (IS) Ballasts apply a relatively high voltage (e.g. 550 volts) to get the discharge going and the lamp starts instantaneously. (GE's UltraMax® family)

Programmed Rapid Start (PRS) Ballasts provide a gentler start through cathode heating prior to application of starting voltage, and are particularly useful when lamps are turned on and off frequently (motion sensors, occupancy sensors). However, they are being used even in one-start-a-day applications because they extend lamp life significantly. (GE's UltraStart® family)

Ballast Efficacy Factor (BEF)

BEF is BF (Ballast factor) divided by ballast input watts. For a given BF and a certain number of lamps operated on the ballast, the more efficient ballast will have lower watts and, therefore, a higher BEF.

$$\text{Ballast Efficacy (BEF) Factor} = \frac{\text{Ballast Factor}}{\text{Ballast Input Watts}} \times 100$$

Some industry groups write standards based on BEF in order to identify more efficient ballasts. However, this measure is somewhat obscure and an alternate measure that is simpler to understand is:

System Efficacy (Mean System LPW or MLPW)

This is the mean source lumens provided by the particular system divided by the watts the system is using.

$$\text{Mean Source Lumens} = \left(\text{Lamp Mean Lumen Rating}\right) \times \left(\text{Ballast Factor}\right) \times \left(\text{Number of Lamps}\right)$$

and

$$\text{System Efficacy (MLPW)} = \frac{\text{Mean Source Lumens}}{\text{Ballast Input Watts}}$$

The Consortium on Energy Efficiency (CEE) uses both BEF and MLPW in its documents on high performance T8 specifications and reduced wattage T8 specifications. The rebate programs of many utilities around the country currently use these two measures to determine which systems will qualify for rebates.

Ballast Electrical Efficiency (BE)

A simple electrical measure of how efficiently a ballast performs is:

$$\text{Ballast Efficiency} = \frac{\text{Watts Delivered to Lamps}}{\text{Ballast Input Watts}}$$

NEMA (National Electric Manufacturer's Association) uses Ballast Efficiency (BE) as an alternative method to designate "NEMA PREMIUM" ballasts as those having 90% or greater electrical efficiency. BE is gaining increasing acceptance as an objective and reproducible measure because it excludes the variability present in individual lamp performance and the difficulties associated with accurate determination of lumens.

Fluorescent Ballast Application Notes

Ballast Operating Lifetime

Heat is the enemy of modern electronic ballasts. As ballast case temperature increases, life expectancy decreases. GE ballast designs feature patented high efficiency circuits that have less losses and lower internal heat generation than competitive ballasts. Ballast lifetime is developed from thermal testing conducted per UL specified test conditions at a 40°C still air ambient condition. Some GE ballasts are even UL approved for use at 55°C ambient without exceeding the maximum permissible case temperature. Since GE ballasts typically operate well below the maximum temperature rating, the ballast lifetime will usually extend longer that the design life of 60,000 hours. Reducing the case temperature by 10°C will double the life expectancy, but this depends on the operating environment which includes ambient temperature, fixture thermal performance and input voltage conditions.

EMI and RFI

All electronic ballasts operate at frequencies that generate Electromagnetic Interference or Radio Frequency Interference. GE Ballasts are tested by FCC certified labs to ensure their emissions are well within the established limits for Class A Commercial and Industrial applications. Some GE ballasts are designed for Residential applications and meet a more stringent Class B Consumer FCC rating. The Consumer rating will minimize chances of the ballast interfering with radio and television reception. If interference results, ensure the ballast case is properly grounded to the metal fixture, and the fixture is grounded by a green ground wire that connects directly to the service panel. As the electromagnetic spectrum is increasing occupied, it is recommended to test a sample lamp and ballast system in the intended environment to ensure there are no undesired interactions with other equipment or systems operating in the same environment.

Energy Saving Lamps

Energy saving lamps lower the lamp operating wattage by use of special gas mixtures. These lamp are sometimes harder to strike or break down than full wattage lamps and due to the gas mixture, may be more susceptible to striations during operation. GE Ballasts feature proprietary anti striation circuitry that minimize or completely eliminate striation effect of energy saving lamps. Ballast remote mounting distance is specified for standard full wattage lamps only.

Fixture Wiring Techniques

Electronic ballasts are now much more popular than the old magnetic ballasts, offering superior energy efficiency, greater lamp efficacy, and cooler operation. The first electronic ballasts operated only slightly above the audible frequency range around 22 kHz. As today's ballasts operate at high frequency, typically 40 kHz and higher, some attention is needed to ensure the fixture wiring does not create any starting or operational issues due to wiring capacitance.

See page E-1 for warranty information.

As ballasts decrease in size, the operation frequency increases. The increased frequency of operation makes capacitive effects more pronounced. Capacitive effects come from a high frequency lead wire being in proximity to another lead wire or the grounded metal of the fixture. Worse capacitive effects result when the lead wires are closer and the frequency is higher.

When installing ballasts into fixtures, the wiring needs to be routed point to point and if possible, the excess wire trimmed out. Occasionally, some installers tend to be too neat, twisting the wires together or bundling the wires together with wire ties. While this does make for a neat fixture, it may create capacitive effect issues for the lamp and ballast system.

Wire bundling can create unintended current flows from lead to lead and also from lead to ground in the fixture. These current flows are parasitic, and will reduce the available starting voltage, preheating current or discharge current in the lamp. The results can be poor or erratic starting or reduced system efficacy as some of the energy from the ballast is getting "short circuited" away from the intended lamp load. In T5 or CFL applications, excessive stray capacitance can also affect End Of Life circuit operation, causing the ballast to prematurely shut down.

In dual switched systems, or systems that use two or more ballasts within the same fixture, ballasts more subject to cross talk and interference due to capacitive effects. It is important the wiring be placed neatly without bunching up the excess in the wiring channel. Lamp leads can run parallel to each other but should not be bundled or tied together. Lamp leads should also trimmed when possible to eliminate excess lead length. It is also good to keep the output leads from one ballast away from those of the other ballast. Lamp leads should also be kept away from the AC input leads as this can cause undesired interference or EMI, which can affect other devices operating on the same power source.

In summary, the lamp lead wiring should be laid parallel into the fixture with excess length trimmed. Do not twist or otherwise bundle the leads together, and ensure no leads are caught or crimped between the ballast channel cover and the fixture body.

Remote and Tandem Mounting of Ballasts

As today's economics drive lower first costs, many fixture manufacturers increasingly use only one ballast to operate lamps in two or more fixtures. This tandem mounting scheme decreases the total number of ballasts needed for a given installation. The fixtures are typically interconnected with a wiring "whip" of flexible metal conduit with a number of wires inside. The whip brings the high frequency lamp leads from the ballast in one fixture to the lamp or lamps in a satellite fixture. Tandem operation has lamps operating in the fixture that has the ballast and also in the satellite fixture.

Remote mounting is when a ballast is located in a separate enclosure without lamps and wires to all the lamps run through a conduit or flexible whip to a remote fixture which contains the lamps.

In past years, ballasts were magnetic and operated at 60 Hz, and tandem or remote mounting scheme was only occasionally used, so issues with remote or tandem mounting were not so frequent. In today's energy efficient electronic ballasts, the frequency is much higher, usually greater than 40 kHz, and more fixtures are being tandem operated to manage first costs of a system. Tandem operation can lead to system issues such as poor or erratic starting and differences in light level during steady state lamp operation.

These issues develop when the combination of high operating frequency and parasitic capacitance from the wiring create unintended coupling between conductors or to earth ground. Each wire in the fixture and the interconnect whip will have a certain capacitance to other wires running parallel to it, and also a capacitance to earth ground. This unintended capacitive coupling creates a shunt path taking away some energy that was intended for the lamp load. This causes reductions in the available open circuit voltage need to strike the lamp or a loss of preheating energy. Both cases lead to poor or erratic starting in the remote fixture(s).

For some multiple lamp ballasts, certain lamp leads are at higher potential and should be connected to lamps that reside in the same fixture as the ballast. The ballast manufacturer may have specific recommendations as to which of the lamp leads can be utilized for the remote fixture of a tandem set, and restrictions on how long the wiring from ballast to lamp may be. Ballasts may also have different permissible wiring lengths per lamp lead color based on the application. Remote mounting applications may permit a longer wiring length than some tandem applications as the remote situation presents a uniform loss to all lamp leads. The tandem operation scheme may present different capacitances to different lamp leads that could result in poor starting and differences in light level during operation.

In some cases, these issues are compounded because the interconnect whip is carrying wires connected to two different ballasts. Since the ballasts are not likely to be exactly in phase, there can be additional losses due to capacitive phase cancellation between leads of the two different ballasts. There may also be system interactions where either ballast will work fine separately, but will not work together. In these cases, the interconnect whip may need to be shorter, limiting the distance between the fixtures, or two separate whips could be used.

As the ballast operating frequency gets higher, the capacitive shunting effect become more pronounced. Dimming ballasts typically are at the highest frequency when in deep dimming. Due to the effects of capacitive losses, lamps may appear at different intensities or drop out and may flicker due to losses of cathode heating energy. It is recommended that dimming ballasts not be remote mounted or used in tandem operation, all lamp wiring must stay within the fixture containing the dimming ballast.

Energy saving lamps may be more susceptible to starting issues when used in remote or tandem fixture operation. These lamps utilize a gas mixture that does not ionize as easily as full wattage lamps, and are more likely to have starting issues due to the reduced starting voltage resulting from the capacitive losses.

Remote starting distances are specified at room temperature using standard life, full wattage lamps, with one ballast driving all lamps located in the remote fixture through a single conduit at the specified distance. In view of the possible differences related to any specific application, it is advised that any tandem or remote mount application using one or more ballasts be tested in the final configuration to ensure the system will perform as expected in the intended environment.

See page E-1 for warranty information.

UltraMax® Professional Series
Instant Start Multi-Voltage 120–277V High-Efficiency
T8 Instant Start Ballasts For F17 (2 ft), F25 (3 ft), F32 (4 ft), F40 (5 ft) Lamps

72258 – GE132MAXP-L/ULTRA

UltraMax® P-Series Instant Start
Multi-Voltage High-Efficiency
1 – F32T8 120 to 277 "L" .77 BF UltraMax®P

- Energy-saving high-efficiency instant-start electronic ballast (>90%)
- Multi-voltage technology handles voltage from 120 to 277V
- UL Type CC Rating provides protection against arcing in electrical devices
- Anti-striation control for better light quality
- UL 55°C Ambient Temperature rating
- Cold temperature -22°F Minimum Starting Temperature

General characteristics

Ballast Type	Electronic – High-Efficiency Multivolt Instant Start
Starting Method	Instant start
Lamp Wiring	
Line Voltage Regulation(+/-)	10%
Ambient Temperature (MAX)	55°C (131°F)
Case Temperature (MAX)	70°C (158°F)
Ballast Factor	Low
Power Factor Correction	Active
Sound Rating	A (20-24 decibels)
Enclosure Type	Metal
Additional Info	Anti-striation control, Auto-restart, Inherently Thermally Protected, UL Class P

Electrical characteristics

Supply Current Frequency	50 Hz/60 Hz

Order information

10 Pack	Pallet Pack	DIY Pack	IP Pack
72258			

Dimensions

Wiring diagram – LFL 1A – see example on Page 10-61	
Case dimensions – Ref Drawing -A – see Page 10-62	
Length (L)	9.5 in (241 mm)
Width (W)	1.3 in (33 mm)
Height (H)	1.0 in (25.4 mm)
Mounting dimensions	
Mount Length (M)	8.9 in (226 mm)
Mount Width (X or F)	0.87 in (22 mm)
Mount Slots (MS)	0.3 in (8 mm)
Weight	0.6lbs
Exit Type	Side
Remote Mounting Distance to Lamp (F32T8)	18 ft
Remote Mounting Wire Gauge	18 AWG
Lead lengths	
Black	25 in (635 mm)
White	25 in (635 mm)
Blue	31 in (787 mm)
Red	37 in (940 mm)

Specifications by lamp and wattage

Lamp	# of Lamps	Line Volts (V)	System Watts (W)	Nom. Line Current (A)	System Ballast Factor	Ballast Efficacy Factor	Power Factor% (>=)	Crest Factor (<=)	THD% (<=)	Min. Starting Temp (°F/°C)
	1	120	25	0.22	.78	3.12	99	1.5	10	-22/-30
F32T8	1	277	25	0.10	.78	3.12	94	1.5	10	-22/-30
	1	120	24	0.21	.77	3.21	99	1.5	10	-22/-30
F32T8/WM	1	277	24	0.09	.77	3.21	94	1.5	10	-22/-30
	1	120	22	0.20	.81	3.68	99	1.5	10	-22/-30
F28T8	1	277	22	0.09	.81	3.68	94	1.5	10	-22/-30
	1	120	21	0.18	.77	3.67	99	1.5	10	-22/-30
F32T8/25W	1	277	21	0.08	.77	3.67	93	1.5	10	-22/-30
	1	120	21	0.18	.87	4.14	99	1.5	10	-22/-30
F25T8	1	277	21	0.08	.87	4.14	93	1.5	10	-22/-30
	1	120	15	0.13	.92	6.13	99	1.5	10	-22/-30
F17T8	1	277	15	0.07	.92	6.13	89	1.5	10	-22/-30
	1	120	14	0.10	.77	5.5	99	1.5	10	-22/-30
FE15T8	1	277	14	0.05	.77	5.5	87	1.5	10	-22/-30
	1	120	21	0.19	.80	3.81	99	1.5	10	0/-18
F25T12	1	277	21	0.09	.80	3.81	94	1.5	10	0/-18

Safety and performance

UL Class P UL Type 1 Outdoor UL Type CC UL Type HL FCC – CLASS A Non-Consumer

Product is compliant with material restriction requirements of RoHS

See page E-1 for warranty information.

UltraMax® Professional Series
Instant Start Multi-Voltage 120–277V High-Efficiency
T8 Instant Start Ballasts For F17 (2 ft), F25 (3 ft), F32 (4 ft), F40 (5 ft) Lamps

72259 – GE132MAXP-N/ULTRA

UltraMax® P-Series Instant Start
Multi-Voltage High-Efficiency
1 – F32T8 120 to 277 "N" .87 BF UltraMax®P

- Energy-saving high-efficiency instant-start electronic ballast (>90%)
- Multi-voltage technology handles voltage from 120 to 277V
- UL Type CC Rating provides protection against arcing in electrical devices
- Anti-striation control for better light quality
- UL 55°C Ambient Temperature rating
- Cold temperature -22°F Minimum Starting Temperature

General characteristics

Ballast Type	Electronic – High-Efficiency Multivolt Instant Start
Starting Method	Instant start
Lamp Wiring	
Line Voltage Regulation(+/-)	10%
Ambient Temperature (MAX)	55°C (131°F)
Case Temperature (MAX)	70°C (158°F)
Ballast Factor	Normal
Power Factor Correction	Active
Sound Rating	A (20-24 decibels)
Enclosure Type	Metal
Additional Info	Anti-striation control, Auto-restart, Inherently Thermally Protected, UL Class P

Electrical characteristics

Supply Current Frequency	50 Hz/60 Hz

Order information

10 Pack	Pallet Pack	DIY Pack	IP Pack
72259			

Dimensions

Wiring diagram – LFL 1A – see example on Page 10-61	
Case dimensions – Ref Drawing -A – see Page 10-62	
Length (L)	9.5 in (241 mm)
Width (W)	1.3 in (33 mm)
Height (H)	1.0 in (25.4 mm)
Mounting dimensions	
Mount Length (M)	8.9 in (226 mm)
Mount Width (X or F)	0.87 in (22 mm)
Mount Slots (MS)	0.3 in (8 mm)
Weight	0.6lbs
Exit Type	Side
Remote Mounting Distance to Lamp (F32T8)	18 ft
Remote Mounting Wire Gauge	18 AWG
Lead lengths	
Black	25 in (635 mm)
White	25 in (635 mm)
Blue	31 in (787 mm)
Red	37 in (940 mm)

Specifications by lamp and wattage

Lamp	# of Lamps	Line Volts (V)	System Watts (W)	Nom. Line Current (A)	System Ballast Factor	Ballast Efficacy Factor	Power Factor% (>=)	Crest Factor (<=)	THD% (<=)	Min. Starting Temp (°F/°C)
	1	120	28	0.24	.88	3.14	99	1.5	10	-22/-30
F32T8	1	277	28	0.11	.88	3.14	98	1.5	10	-22/-30
	1	120	27	0.23	.87	3.22	99	1.5	10	-22/-30
F32T8/WM	1	277	27	0.10	.87	3.22	98	1.5	10	-22/-30
	1	120	25	0.22	.89	3.56	99	1.5	10	-22/-30
F28T8	1	277	25	0.10	.89	3.56	98	1.5	10	-22/-30
	1	120	24	0.19	.88	3.67	99	1.5	10	-22/-30
F32T8/25W	1	277	23	0.09	.88	3.83	94	1.5	10	-22/-30
	1	120	23	0.19	.94	4.09	99	1.5	10	-22/-30
F25T8	1	277	24	0.09	.94	3.92	94	1.5	10	-22/-30
	1	120	17	0.14	.98	5.76	99	1.5	10	-22/-30
F17T8	1	277	17	0.07	.98	5.76	90	1.5	10	-22/-30
	1	120	14	0.12	.92	6.57	99	1.5	10	-22/-30
FE15T8	1	277	14	0.06	.92	6.57	88	1.5	10	-22/-30
	1	120	25	0.21	.94	3.76	99	1.5	10	0/-18
F25T12	1	277	25	0.10	.94	3.76	94	1.5	10	0/-18

Safety and performance

UL Class P UL Type 1 Outdoor UL Type CC UL Type HL FCC – CLASS A Non-Consumer

Product is compliant with material restriction requirements of RoHS

See page E-1 for warranty information.

UltraMax® Professional Series
Instant Start Multi-Voltage 120–277V High-Efficiency
T8 Instant Start Ballasts For F17 (2 ft), F25 (3 ft), F32 (4 ft), F40 (5 ft) Lamps

63885 – GE132MAXP-H/ULTRA

UltraMax® P-Series Instant Start
Multi-Voltage High-Efficiency
1 – F32T8 120 to 277 "H" 1.18 BF UltraMax®P

- Energy-saving high-efficiency instant-start electronic ballast (>90%)
- Multi-voltage technology handles voltage from 120 to 277V
- UL Type CC Rating provides protection against arcing in electrical devices
- Anti-striation control for better light quality
- UL 55°C Ambient Temperature rating
- Cold temperature -22°F Minimum Starting Temperature

General characteristics

Ballast Type	Electronic – High-Efficiency Multivolt Instant Start
Starting Method	Instant start
Lamp Wiring	
Line Voltage Regulation(+/-)	10%
Ambient Temperature (MAX)	55°C (131°F)
Case Temperature (MAX)	90°C (194°F)
Ballast Factor	High
Power Factor Correction	Active
Sound Rating	A (20-24 decibels)
Enclosure Type	Metal
Additional Info	Anti-striation control, Auto-restart, Inherently Thermally Protected, UL Class P

Electrical characteristics

Supply Current Frequency	50 Hz/60 Hz

Order information

10 Pack	Pallet Pack	DIY Pack	IP Pack
63885			

Dimensions

Wiring diagram – LFL 1A – see example on Page 10-61	
Case dimensions – Ref Drawing -A – see Page 10-62	
Length (L)	9.5 in (241 mm)
Width (W)	1.3 in (33 mm)
Height (H)	1.0 in (25.4 mm)
Mounting dimensions	
Mount Length (M)	8.9 in (226 mm)
Mount Width (X or F)	0.87 in (22 mm)
Mount Slots (MS)	0.3 in (8 mm)
Weight	0.6lbs
Exit Type	Side
Remote Mounting Distance to Lamp (F32T8)	18 ft
Remote Mounting Wire Gauge	18 AWG
Lead lengths	
Black	25 in (635 mm)
White	25 in (635 mm)
Blue	31 in (787 mm)
Red	37 in (940 mm)

Specifications by lamp and wattage

Lamp	# of Lamps	Line Volts (V)	System Watts (W)	Nom. Line Current (A)	System Ballast Factor	Ballast Efficacy Factor	Power Factor% (>=)	Crest Factor (<=)	THD% (<=)	Min. Starting Temp (°F/°C)
	1	120	38	0.32	1.18	3.11	99	1.5	10	-22/-30
F32T8	1	277	37	0.14	1.18	3.19	97	1.5	10	-22/-30
	1	120	36	0.30	1.15	3.19	99	1.5	10	-22/-30
F32T8/WM	1	277	35	0.13	1.15	3.29	97	1.5	10	-22/-30
	1	120	33	0.28	1.15	3.48	99	1.5	10	-22/-30
F28T8	1	277	33	0.12	1.15	3.48	96	1.5	10	-22/-30
	1	120	30	0.25	1.20	4.00	99	1.5	10	-22/-30
F32T8/25W	1	277	30	0.11	1.20	4.00	96	1.5	10	-22/-30
	1	120	30	0.25	1.20	4.00	99	1.5	10	-22/-30
F25T8	1	277	30	0.11	1.20	4.00	96	1.5	10	-22/-30
	1	120	22	0.18	1.23	5.59	99	1.5	10	-22/-30
F17T8	1	277	22	0.09	1.23	5.59	93	1.5	10	-22/-30
	1	120	19	0.16	1.20	6.32	99	1.5	10	-22/-30
FE15T8	1	277	19	0.08	1.20	6.32	91	1.5	10	-22/-30
	1	120	33	0.27	1.20	3.64	99	1.5	10	0/-18
F25T12	1	277	32	0.12	1.20	3.75	96	1.5	10	0/-18

Safety and performance

UL Class P · UL Type 1 Outdoor · UL Type CC · UL Type HL · FCC – CLASS A Non-Consumer

Product is compliant with material restriction requirements of RoHS

UltraMax® Professional Series
Instant Start Multi-Voltage 120–277V High-Efficiency
T8 Instant Start Ballasts For F17 (2 ft), F25 (3 ft), F32 (4 ft), F40 (5 ft) Lamps

73190 – GE232MAXP-H/ULTRA

UltraMax® P-Series Instant Start
Multi-Voltage High-Efficiency

2 or 1 – F32T8 120 to 277 "H" 1.18 BF UltraMax®P

- Energy-saving high-efficiency instant-start electronic ballast (>90%)
- Multi-voltage technology handles voltage from 120 to 277V
- UL Type CC Rating provides protection against arcing in electrical devices
- Anti-striation control for better light quality
- UL 55°C Ambient Temperature rating
- Cold temperature -22°F Minimum Starting Temperature

General characteristics

Ballast Type	Electronic – High-Efficiency Multivolt Instant Start
Starting Method	Instant start
Lamp Wiring	Parallel
Line Voltage Regulation(+/-)	10%
Ambient Temperature (MAX)	55°C (131°F)
Case Temperature (MAX)	90°C (194°F)
Ballast Factor	High
Power Factor Correction	Active
Sound Rating	A (20-24 decibels)
Enclosure Type	Metal
Additional Info	Anti-striation control, Auto-restart, Inherently Thermally Protected, UL Class P

Electrical characteristics

Supply Current Frequency	50 Hz/60 Hz

Order information

10 Pack	Pallet Pack	DIY Pack	IP Pack
73190	73191		

Dimensions

Wiring diagram – LFL 1B – see example on Page 10-61	
Case dimensions – Ref Drawing -A – see Page 10-62	
Length (L)	9.5 in (241 mm)
Width (W)	1.3 in (33 mm)
Height (H)	1.0 in (25.4 mm)
Mounting dimensions	
Mount Length (M)	8.9 in (226 mm)
Mount Width (X or F)	0.87 in (22 mm)
Mount Slots (MS)	0.3 in (8 mm)
Weight	0.7lbs
Exit Type	Side
Remote Mounting Distance to Lamp (F32T8)	18 ft
Remote Mounting Wire Gauge	18 AWG
Lead lengths	
Black	25 in (635 mm)
White	25 in (635 mm)
Blue	31 in (787 mm)
Red	37 in (940 mm)

Specifications by lamp and wattage

Lamp	# of Lamps	Line Volts (V)	System Watts (W)	Nom. Line Current (A)	System Ballast Factor	Ballast Efficacy Factor	Power Factor% (>=)	Crest Factor (<=)	THD% (<=)	Min. Starting Temp (°F/°C)
	2	120	74	0.62	1.19	1.61	99	1.5	10	-22/-30
	2	277	73	0.26	1.19	1.63	98	1.5	10	-22/-30
	1	120	47	0.40	1.38	2.94	99	1.5	10	-22/-30
F32T8	1	277	46	0.18	1.38	3.00	96	1.5	20	-22/-30
	2	120	70	0.59	1.16	1.66	99	1.5	10	22/-30
	2	277	69	0.26	1.16	1.68	98	1.5	10	22/-30
	1	120	43	0.37	1.37	3.19	99	1.5	10	22/-30
F32T8/WM	1	277	43	0.17	1.37	3.19	95	1.5	15	22/-30
	2	120	65	0.55	1.14	1.75	99	1.5	10	22/-30
	2	277	64	0.24	1.14	1.78	97	1.5	10	22/-30
	1	120	40	0.34	1.34	3.35	99	1.5	10	22/-30
F28T8	1	277	41	0.16	1.34	3.27	94	1.5	20	22/-30
	2	120	60	0.51	1.16	1.93	99	1.5	10	22/-30
	2	277	60	0.22	1.16	1.93	97	1.5	15	22/-30
	1	120	38	0.32	1.37	3.60	99	1.5	15	22/-30
F32T8/25W	1	277	38	0.15	1.37	3.60	94	1.5	20	22/-30
	2	120	62	0.52	1.16	1.87	99	1.5	10	22/-30
	2	277	61	0.22	1.16	1.90	97	1.5	15	22/-30
	1	120	38	0.32	1.37	3.61	99	1.5	15	22/-30
F25T8	1	277	38	0.15	1.37	3.61	94	1.5	20	22/-30
	2	120	41	0.36	1.17	2.85	99	1.5	10	22/-30
	2	277	41	0.17	1.17	2.85	95	1.5	20	22/-30
	1	120	26	0.23	1.37	5.27	99	1.5	15	22/-30
F17T8	1	277	27	0.12	1.37	5.07	90	1.5	20	22/-30
	2	120	32	0.29	1.02	3.19	99	1.5	15	22/-30
	2	277	33	0.14	1.02	3.09	93	1.5	20	22/-30
	1	120	23	0.19	1.21	5.26	98	1.5	15	22/-30
FE15T8	1	277	22	0.10	1.21	5.50	87	1.5	20	22/-30
	1	120	56	0.46	.66	1.18	99	1.5	10	22/-30
F40T8	1	277	55	0.21	.66	1.20	94	1.5	15	22/-30
	2	120	64	0.54	1.11	1.73	99	1.5	10	0/-18
	2	277	63	0.24	1.11	1.76	97	1.5	10	0/-18
	1	120	40	0.35	1.36	3.40	99	1.5	10	0/-18
F25T12	1	277	40	0.16	1.36	3.40	94	1.5	15	0/-18

Safety and performance

UL Class P · UL Type 1 Outdoor · UL Type CC · UL Type HL · FCC – CLASS A Non-Consumer

Product is compliant with material restriction requirements of RoHS

See page E-1 for warranty information.

UltraMax® Professional Series
Instant Start Multi-Voltage 120–277V High-Efficiency
T8 Instant Start Ballasts For F17 (2 ft), F25 (3 ft), F32 (4 ft), F40 (5 ft) Lamps

72262 – GE232MAXP-L/ULTRA

UltraMax® P-Series Instant Start
Multi-Voltage High-Efficiency
2 or 1 – F32T8 120 to 277 "L" .77 BF UltraMax®P

- Energy-saving high-efficiency instant-start electronic ballast (>90%)
- Multi-voltage technology handles voltage from 120 to 277V
- UL Type CC Rating provides protection against arcing in electrical devices
- Anti-striation control for better light quality
- UL 55°C Ambient Temperature rating
- Cold temperature -22°F Minimum Starting Temperature

General characteristics

Ballast Type	Electronic – High-Efficiency Multivolt Instant Start
Starting Method	Instant start
Lamp Wiring	Parallel
Line Voltage Regulation(+/-)	10%
Ambient Temperature (MAX)	55°C (131°F)
Case Temperature (MAX)	70°C (158°F)
Ballast Factor	Low
Power Factor Correction	Active
Sound Rating	A (20-24 decibels)
Enclosure Type	Metal
Additional Info	Anti-striation control, Auto-restart, Inherently Thermally Protected, UL Class P

Electrical characteristics

Supply Current Frequency	50 Hz/60 Hz

Order information

10 Pack	Pallet Pack	DIY Pack	IP Pack
72262	72263		

Dimensions

Wiring diagram – LFL 1B – see example on Page 10-61	
Case dimensions – Ref Drawing -A – see Page 10-62	
Length (L)	9.5 in (241 mm)
Width (W)	1.3 in (33 mm)
Height (H)	1.0 in (25.4 mm)
Mounting dimensions	
Mount Length (M)	8.9 in (226 mm)
Mount Width (X or F)	0.87 in (22 mm)
Mount Slots (MS)	0.3 in (8 mm)
Weight	0.7lbs
Exit Type	Side
Remote Mounting Distance to Lamp (F32T8)	18 ft
Remote Mounting Wire Gauge	18 AWG
Lead lengths	
Black	25 in (635 mm)
White	25 in (635 mm)
Blue	31 in (787 mm)
Red	37 in (940 mm)

Specifications by lamp and wattage

Lamp	# of Lamps	Line Volts (V)	System Watts (W)	Nom. Line Current (A)	System Ballast Factor	Ballast Efficacy Factor	Power Factor% (>=)	Crest Factor (<=)	THD% (<=)	Min. Starting Temp (°F/°C)
	2	120	48	0.42	.78	1.63	99	1.5	10	-22/-30
	2	277	48	0.19	.78	1.63	98	1.5	10	-22/-30
	1	120	30	0.24	.96	3.20	99	1.5	10	-22/-30
F32T8	1	277	30	0.11	.96	3.20	95	1.5	10	-22/-30
	2	120	46	0.39	.77	1.67	99	1.5	10	-22/-30
	2	277	46	0.17	.77	1.67	98	1.5	10	-22/-30
	1	120	28	0.22	.77	2.75	99	1.5	10	-22/-30
F32T8/WM	1	277	28	0.11	.77	2.75	94	1.5	10	-22/-30
	2	120	43	0.36	.77	1.79	99	1.5	10	-22/-30
	2	277	42	0.16	.77	1.83	97	1.5	10	-22/-30
	1	120	26	0.21	.77	2.96	99	1.5	10	-22/-30
F28T8	1	277	26	0.10	.77	2.96	94	1.5	10	-22/-30
	2	120	39	0.33	.78	2.00	99	1.5	10	-22/-30
	2	277	39	0.15	.78	2.00	96	1.5	10	-22/-30
	1	120	22	0.18	.78	3.55	98	1.5	10	-22/-30
F32T8/25W	1	277	22	0.09	.78	3.55	93	1.5	10	-22/-30
	2	120	40	0.34	.78	1.95	99	1.5	10	-22/-30
	2	277	40	0.15	.78	1.95	96	1.5	10	-22/-30
	1	120	23	0.21	.96	4.17	99	1.5	10	-22/-30
F25T8	1	277	24	0.10	.96	4.00	93	1.5	15	-22/-30
	2	120	28	0.24	.79	2.82	99	1.5	10	-22/-30
	2	277	29	0.11	.79	2.72	94	1.5	10	-22/-30
	1	120	17	0.15	.98	5.76	99	1.5	10	-22/-30
F17T8	1	277	18	0.08	.98	5.44	90	1.5	10	-22/-30
	2	120	23	0.20	.78	3.39	99	1.5	10	-22/-30
	2	277	23	0.10	.78	3.39	91	1.5	15	-22/-30
	1	120	14	0.13	.78	5.57	99	1.5	10	-22/-30
FE15T8	1	277	15	0.07	.78	5.20	87	1.5	10	-22/-30
	2	120	42	0.35	.80	1.90	99	1.5	10	0/-18
	2	277	41	0.15	.80	1.95	97	1.5	10	0/-18
	1	120	24	0.21	.80	3.33	99	1.5	10	0/-18
F25T12	1	277	24	0.10	.80	3.33	95	1.5	10	0/-18

Safety and performance

c UL us LISTED; UL Class P; UL Type 1 Outdoor; UL Type CC; UL Type HL; FCC – CLASS A Non-Consumer

NEMA Premium; Product is compliant with material restriction requirements of RoHS

See page E-1 for warranty information.

UltraMax® Professional Series
Instant Start Multi-Voltage 120–277V High-Efficiency
T8 Instant Start Ballasts For F17 (2 ft), F25 (3 ft), F32 (4 ft), F40 (5 ft) Lamps

72266 – GE232MAXP-N/ULTRA

UltraMax® P-Series Instant Start
Multi-Voltage High-Efficiency

2 or 1 – F32T8 120 to 277 "N" .87 BF UltraMax®P

- Energy-saving high-efficiency instant-start electronic ballast (>90%)
- Multi-voltage technology handles voltage from 120 to 277V
- UL Type CC Rating provides protection against arcing in electrical devices
- Anti-striation control for better light quality
- UL 55°C Ambient Temperature rating
- Cold temperature -22°F Minimum Starting Temperature

General characteristics

Ballast Type	Electronic – High-Efficiency Multivolt Instant Start
Starting Method	Instant start
Lamp Wiring	Parallel
Line Voltage Regulation(+/-)	10%
Ambient Temperature (MAX)	55°C (131°F)
Case Temperature (MAX)	70°C (158°F)
Ballast Factor	Normal
Power Factor Correction	Active
Sound Rating	A (20-24 decibels)
Enclosure Type	Metal
Additional Info	Anti-striation control, Auto-restart, Inherently Thermally Protected, UL Class P

Electrical characteristics

Supply Current Frequency	50 Hz/60 Hz

Order information

10 Pack	Pallet Pack	DIY Pack	IP Pack
72266	72267	72268	

Dimensions

Wiring diagram – LFL 1B – see example on Page 10-61	
Case dimensions – Ref Drawing -A – see Page 10-62	
Length (L)	9.5 in (241 mm)
Width (W)	1.3 in (33 mm)
Height (H)	1.0 in (25.4 mm)
Mounting dimensions	
Mount Length (M)	8.9 in (226 mm)
Mount Width (X or F)	0.87 in (22 mm)
Mount Slots (MS)	0.3 in (8 mm)
Weight	0.7lbs
Exit Type	Side
Remote Mounting Distance to Lamp (F32T8)	18 ft
Remote Mounting Wire Gauge	18 AWG
Lead lengths	
Black	25 in (635 mm)
White	25 in (635 mm)
Blue	31 in (787 mm)
Red	37 in (940 mm)

Specifications by lamp and wattage

Lamp	# of Lamps	Line Volts (V)	System Watts (W)	Nom. Line Current (A)	System Ballast Factor	Ballast Efficacy Factor	Power Factor% (>=)	Crest Factor (<=)	THD% (<=)	Min. Starting Temp (°F/°C)
	2	120	54	0.47	.88	1.63	99	1.5	10	-22/-30
	2	277	53	0.20	.88	1.66	98	1.5	10	-22/-30
	1	120	31	0.26	1.08	3.48	99	1.5	10	-22/-30
F32T8	1	277	31	0.12	1.08	3.48	96	1.5	10	-22/-30
	2	120	52	0.44	.87	1.67	99	1.5	10	-22/-30
	2	277	51	0.19	.87	1.71	98	1.5	10	-22/-30
	1	120	29	0.25	1.07	3.69	99	1.5	10	-22/-30
F32T8/WM	1	277	29	0.12	1.07	3.69	96	1.5	10	-22/-30
	2	120	48	0.40	.85	1.77	99	1.5	10	-22/-30
	2	277	47	0.17	.85	1.81	98	1.5	10	-22/-30
	1	120	27	0.24	1.05	3.89	99	1.5	10	-22/-30
F28T8	1	277	27	0.11	1.05	3.89	95	1.5	10	-22/-30
	2	120	44	0.37	.87	1.98	99	1.5	10	-22/-30
	2	277	43	0.16	.87	2.02	98	1.5	10	-22/-30
	1	120	25	0.23	.87	3.48	99	1.5	10	-22/-30
F32T8/25W	1	277	25	0.10	.87	3.48	94	1.5	10	-22/-30
	2	120	44	0.38	.87	1.98	99	1.5	10	-22/-30
	2	277	44	0.16	.87	1.98	98	1.5	10	-22/-30
	1	120	26	0.23	1.09	4.19	99	1.5	10	-22/-30
F25T8	1	277	26	0.11	1.09	4.19	94	1.5	10	-22/-30
	2	120	31	0.27	.88	2.84	99	1.5	10	-22/-30
	2	277	31	0.12	.88	2.84	96	1.5	10	-22/-30
	1	120	19	0.17	1.09	5.74	99	1.5	10	-22/-30
F17T8	1	277	19	0.08	1.09	5.74	90	1.5	20	-22/-30
	2	120	25	0.21	.91	3.64	99	1.5	10	-22/-30
	2	277	25	0.10	.91	3.64	93	1.5	15	-22/-30
	1	120	16	0.14	.91	5.69	99	1.5	10	-22/-30
FE15T8	1	277	16	0.07	.91	5.69	88	1.5	15	-22/-30
	2	120	46	0.39	.93	2.02	99	1.5	10	0/-18
	2	277	46	0.17	.93	2.02	98	1.5	10	0/-18
	1	120	27	0.24	.93	3.44	99	1.5	10	0/-18
F25T12	1	277	27	0.11	.93	3.44	95	1.5	10	0/-18

Safety and performance

UL Class P UL Type 1 Outdoor UL Type CC UL Type HL FCC – CLASS A Non-Consumer

Product is compliant with material restriction requirements of RoHS

See page E-1 for warranty information.

UltraMax® Professional Series
Instant Start Multi-Voltage 120–277V High-Efficiency
T8 Instant Start Ballasts For F17 (2 ft), F25 (3 ft), F32 (4 ft), F40 (5 ft) Lamps

71421 – GE232MAXP-N+

UltraMax® P-Series Instant Start
Multi-Voltage High-Efficiency

2 or 1 – F32T8 120 to 277 "N+" 1.0 BF UltraMax®P

- Energy-saving high-efficiency instant-start electronic ballast (>90%)
- Multi-voltage technology handles voltage from 120 to 277V
- UL Type CC Rating provides protection against arcing in electrical devices
- Anti-striation control for better light quality
- UL 55°C Ambient Temperature rating
- Cold temperature -22°F Minimum Starting Temperature

General characteristics

Ballast Type	Electronic – High-Efficiency Multivolt Instant Start
Starting Method	Instant start
Lamp Wiring	Parallel
Line Voltage Regulation(+/-)	10%
Ambient Temperature (MAX)	55°C (131°F)
Case Temperature (MAX)	70°C (158°F)
Ballast Factor	Normal-High
Power Factor Correction	Active
Sound Rating	A (20-24 decibels)
Enclosure Type	Metal
Additional Info	Anti-striation control, Auto-restart, Inherently Thermally Protected, UL Class P

Electrical characteristics

Supply Current Frequency	50 Hz/60 Hz

Order information

10 Pack	Pallet Pack	DIY Pack	IP Pack
71421			

Dimensions

Wiring diagram – LFL 1B – see example on Page 10-61	
Case dimensions – Ref Drawing -A – see Page 10-62	
Length (L)	9.5 in (241 mm)
Width (W)	1.3 in (33 mm)
Height (H)	1.0 in (25.4 mm)
Mounting dimensions	
Mount Length (M)	8.9 in (226 mm)
Mount Width (X or F)	0.87 in (22 mm)
Mount Slots (MS)	0.3 in (8 mm)
Weight	0.7lbs
Exit Type	Side
Remote Mounting Distance to Lamp (F32T8)	18 ft
Remote Mounting Wire Gauge	18 AWG
Lead lengths	
Black	25 in (635 mm)
White	25 in (635 mm)
Blue	31 in (787 mm)
Red	37 in (940 mm)

Specifications by lamp and wattage

Lamp	# of Lamps	Line Volts (V)	System Watts (W)	Nom. Line Current (A)	System Ballast Factor	Ballast Efficacy Factor	Power Factor% (>=)	Crest Factor (<=)	THD% (<=)	Min. Starting Temp (°F/°C)
	2	120	63	0.53	1.01	1.60	99	1.5	10	-22/-30
	2	277	62	0.22	1.01	1.63	98	1.5	10	-22/-30
	1	120	39	0.33	1.17	3.00	99	1.5	10	-22/-30
F32T8	1	277	39	0.14	1.17	3.00	96	1.5	10	-22/-30
	2	120	60	0.50	1.00	1.67	99	1.5	10	-22/-30
	2	277	60	0.22	1.00	1.67	98	1.5	10	-22/-30
	1	120	37	0.30	1.16	3.14	99	1.5	10	-22/-30
F32T8/WM	1	277	37	0.14	1.16	3.14	96	1.5	10	-22/-30
	2	120	55	0.46	.98	1.78	99	1.5	10	-22/-30
	2	277	55	0.21	.98	1.78	98	1.5	10	-22/-30
	1	120	34	0.28	1.16	3.41	99	1.5	10	-22/-30
F28T8	1	277	34	0.13	1.16	3.41	95	1.5	10	-22/-30
	2	120	51	0.43	1.00	1.96	99	1.5	10	-22/-30
	2	277	51	0.19	1.00	1.96	98	1.5	10	-22/-30
	1	120	31	0.26	1.00	3.23	99	1.5	10	-22/-30
F32T8/25W	1	277	31	0.12	1.00	3.23	95	1.5	15	-22/-30
	2	120	51	0.43	1.00	1.96	99	1.5	10	-22/-30
	2	277	51	0.19	1.00	1.96	98	1.5	10	-22/-30
	1	120	31	0.26	1.19	3.84	99	1.5	10	-22/-30
F25T8	1	277	31	0.12	1.19	3.84	95	1.5	15	-22/-30
	2	120	37	0.31	1.01	2.73	99	1.5	10	-22/-30
	2	277	37	0.14	1.01	2.73	97	1.5	10	-22/-30
	1	120	24	0.20	1.19	4.96	99	1.5	10	-22/-30
F17T8	1	277	24	0.10	1.19	4.96	91	1.5	20	-22/-30
	2	120	30	0.26	1.00	3.33	99	1.5	10	-22/-30
	2	277	31	0.12	1.00	3.23	94	1.5	15	-22/-30
	1	120	20	0.17	1.00	5.00	99	1.5	10	-22/-30
FE15T8	1	277	21	0.09	1.00	4.76	89	1.5	15	-22/-30
	2	120	55	0.46	.98	1.78	99	1.5	10	0/-18
	2	277	54	0.20	.98	1.81	98	1.5	10	0/-18
	1	120	34	0.28	.98	2.88	99	1.5	10	0/-18
F25T12	1	277	34	0.13	.98	2.88	96	1.5	10	0/-18

Safety and performance

UL Class P UL Type 1 Outdoor UL Type CC UL Type HL FCC – CLASS A Non-Consumer

Product is compliant with material restriction requirements of RoHS

See page E-1 for warranty information.

UltraMax® Professional Series
Instant Start Multi-Voltage 120–277V High-Efficiency
T8 Instant Start Ballasts For F17 (2 ft), F25 (3 ft), F32 (4 ft), F40 (5 ft) Lamps

78619 – GE332MAXP-H/ULTRA

UltraMax® P-Series Instant Start
Multi-Voltage High-Efficiency

3 or 2 – F32T8 120 to 277 "H" 1.18 BF UltraMax®P

- Energy-saving high-efficiency instant-start electronic ballast (>90%)
- Multi-voltage technology handles voltage from 120 to 277V
- UL Type CC Rating provides protection against arcing in electrical devices
- Anti-striation control for better light quality
- UL 55°C Ambient Temperature rating
- Cold temperature -22°F Minimum Starting Temperature

General characteristics

Ballast Type	Electronic – High-Efficiency Multivolt Instant Start
Starting Method	Instant start
Lamp Wiring	Parallel
Line Voltage Regulation(+/-)	10%
Ambient Temperature (MAX)	55°C (131°F)
Case Temperature (MAX)	90°C (194°F)
Ballast Factor	High
Power Factor Correction	Active
Sound Rating	A (20-24 decibels)
Enclosure Type	Metal
Additional Info	Anti-striation control, Auto-restart, Inherently Thermally Protected, UL Class P

Electrical characteristics

Supply Current Frequency	50 Hz/60 Hz

Order information

10 Pack	Pallet Pack	DIY Pack	IP Pack
78619	78620		

Dimensions

Wiring diagram – LFL 1C – see example on Page 10-61	
Case dimensions – Ref Drawing -A – see Page 10-62	
Length (L)	9.5 in (241 mm)
Width (W)	1.3 in (33 mm)
Height (H)	1.0 in (25.4 mm)
Mounting dimensions	
Mount Length (M)	8.9 in (226 mm)
Mount Width (X or F)	0.87 in (22 mm)
Mount Slots (MS)	0.3 in (8 mm)
Weight	0.9lbs
Exit Type	Side
Remote Mounting Distance to Lamp (F32T8)	18 ft
Remote Mounting Wire Gauge	18 AWG
Lead lengths	
Black	25 in (635 mm)
White	25 in (635 mm)
Blue	31 in (787 mm)
Red	37 in (940 mm)

Specifications by lamp and wattage

Lamp	# of Lamps	Line Volts (V)	System Watts (W)	Nom. Line Current (A)	System Ballast Factor	Ballast Efficacy Factor	Power Factor% (>=)	Crest Factor (<=)	THD% (<=)	Min. Starting Temp (°F/°C)
	3	120	110	0.93	1.18	1.10	99	1.5	10	-22/-30
	3	277	108	0.40	1.18	1.12	98	1.5	10	-22/-30
	2	120	85	0.74	1.30	1.53	99	1.5	10	-22/-30
F32T8	2	277	84	0.32	1.30	1.55	98	1.5	10	-22/-30
	3	120	103	0.86	1.13	1.07	99	1.5	10	-22/-30
	3	277	101	0.36	1.13	1.09	98	1.5	10	-22/-30
	2	120	79	0.68	1.26	1.59	99	1.5	10	-22/-30
F32T8/WM	2	277	78	0.30	1.26	1.62	98	1.5	10	-22/-30
	3	120	95	0.82	1.14	1.20	99	1.5	10	-22/-30
	3	277	94	0.35	1.14	1.21	98	1.5	10	-22/-30
	2	120	73	0.63	1.28	1.75	99	1.5	10	-22/-30
F28T8	2	277	72	0.27	1.28	1.78	97	1.5	10	-22/-30
	3	120	91	0.79	1.18	1.30	99	1.5	10	-22/-30
	3	277	90	0.34	1.18	1.31	98	1.5	10	-22/-30
	2	120	70	0.59	1.26	1.80	99	1.5	10	-22/-30
F32T8/25W	2	277	68	0.26	1.26	1.85	97	1.5	10	-22/-30
	3	120	90	0.79	1.17	1.30	99	1.5	10	-22/-30
	3	277	90	0.34	1.17	1.30	98	1.5	10	-22/-30
	2	120	70	0.59	1.32	1.89	99	1.5	10	-22/-30
F25T8	2	277	68	0.26	1.32	1.94	97	1.5	10	-22/-30
	3	120	61	0.53	1.18	1.93	99	1.5	10	-22/-30
	3	277	60	0.23	1.18	1.97	97	1.5	10	-22/-30
	2	120	47	0.41	1.32	2.81	99	1.5	10	-22/-30
F17T8	2	277	47	0.19	1.32	2.81	95	1.5	15	-22/-30
	3	120	50	0.42	1.03	2.06	99	1.5	10	-22/-30
	3	277	50	0.20	1.03	2.06	97	1.5	10	-22/-30
	2	120	39	0.33	1.13	2.90	99	1.5	10	-22/-30
FE15T8	2	277	39	0.16	1.13	2.90	95	1.5	15	-22/-30
	2	120	102	0.85	1.24	1.22	99	1.5	10	-22/-30
F40T8	2	277	101	0.37	1.24	1.23	97	1.5	10	-22/-30
	3	120	94	0.81	1.10	1.17	99	1.5	10	0/-18
	3	277	92	0.35	1.10	1.20	98	1.5	10	0/-18
	2	120	73	0.63	1.23	1.68	99	1.5	10	0/-18
F25T12	2	277	73	0.27	1.23	1.68	97	1.5	10	0/-18

Safety and performance

UL Class P · UL Type 1 Outdoor · UL Type CC · UL Type HL · FCC – CLASS A Non-Consumer

Product is compliant with material restriction requirements of RoHS

See page E-1 for warranty information.

UltraMax® Professional Series
Instant Start Multi-Voltage 120–277V High-Efficiency
T8 Instant Start Ballasts For F17 (2 ft), F25 (3 ft), F32 (4 ft), F40 (5 ft) Lamps

78621 – GE332MAXP-L/ULTRA

UltraMax® P-Series Instant Start
Multi-Voltage High-Efficiency
3 or 2 – F32T8 120 to 277 "L" .77 BF UltraMax®P

- Energy-saving high-efficiency instant-start electronic ballast (>90%)
- Multi-voltage technology handles voltage from 120 to 277V
- UL Type CC Rating provides protection against arcing in electrical devices
- Anti-striation control for better light quality
- UL 55°C Ambient Temperature rating
- Cold temperature -22°F Minimum Starting Temperature

General characteristics

Ballast Type	Electronic – High-Efficiency Multivolt Instant Start
Starting Method	Instant start
Lamp Wiring	Parallel
Line Voltage Regulation(+/-)	10%
Ambient Temperature (MAX)	55°C (131°F)
Case Temperature (MAX)	70°C (158°F)
Ballast Factor	Low
Power Factor Correction	Active
Sound Rating	A (20-24 decibels)
Enclosure Type	Metal
Additional Info	Anti-striation control, Auto-restart, Inherently Thermally Protected, UL Class P

Electrical characteristics

Supply Current Frequency	50 Hz/60 Hz

Order information

10 Pack	Pallet Pack	DIY Pack	IP Pack
78621			

Dimensions

Wiring diagram – LFL 1C – see example on Page 10-61	
Case dimensions – Ref Drawing -A – see Page 10-62	
Length (L)	9.5 in (241 mm)
Width (W)	1.3 in (33 mm)
Height (H)	1.0 in (25.4 mm)
Mounting dimensions	
Mount Length (M)	8.9 in (226 mm)
Mount Width (X or F)	0.87 in (22 mm)
Mount Slots (MS)	0.3 in (8 mm)
Weight	0.8lbs
Exit Type	Side
Remote Mounting Distance to Lamp (F32T8)	18 ft
Remote Mounting Wire Gauge	18 AWG
Lead lengths	
Black	25 in (635 mm)
White	25 in (635 mm)
Blue	31 in (787 mm)
Red	37 in (940 mm)

Specifications by lamp and wattage

Lamp	# of Lamps	Line Volts (V)	System Watts (W)	Nom. Line Current (A)	System Ballast Factor	Ballast Efficacy Factor	Power Factor% (>=)	Crest Factor (<=)	THD% (<=)	Min. Starting Temp (°F/°C)
	3	120	73	0.61	.78	1.07	99	1.5	10	-22/-30
	3	277	72	0.26	.78	1.08	98	1.5	10	-22/-30
	2	120	58	0.49	.89	1.53	99	1.5	10	-22/-30
F32T8	2	277	58	0.22	.89	1.53	97	1.5	15	-22/-30
	3	120	70	0.59	.76	1.09	99	1.5	10	-22/-30
	3	277	69	0.26	.76	1.10	98	1.5	10	-22/-30
	2	120	54	0.45	.87	1.61	99	1.5	10	-22/-30
F32T8/WM	2	277	54	0.20	.87	1.61	97	1.5	15	-22/-30
	3	120	64	0.54	.75	1.17	99	1.5	10	-22/-30
	3	277	64	0.24	.75	1.17	97	1.5	10	-22/-30
	2	120	49	0.41	.84	1.71	99	1.5	10	-22/-30
F28T8	2	277	49	0.19	.84	1.71	96	1.5	15	-22/-30
	3	120	61	0.51	.77	1.26	99	1.5	10	-22/-30
	3	277	60	0.22	.77	1.28	97	1.5	15	-22/-30
	2	120	46	0.39	.84	1.83	99	1.5	10	-22/-30
F32T8/25W	2	277	46	0.18	.84	1.83	95	1.5	15	-22/-30
	3	120	61	0.51	.78	1.28	99	1.5	10	-22/-30
	3	277	60	0.22	.78	1.30	97	1.5	15	-22/-30
	2	120	46	0.39	.86	1.87	99	1.5	10	-22/-30
F25T8	2	277	46	0.18	.86	1.87	95	1.5	15	-22/-30
	3	120	42	0.36	.78	1.86	99	1.5	10	-22/-30
	3	277	42	0.17	.78	1.86	95	1.5	15	-22/-30
	2	120	32	0.28	.88	2.75	99	1.5	15	-22/-30
F17T8	2	277	33	0.14	.88	2.67	93	1.5	15	-22/-30
	3	120	33	0.29	.70	2.12	99	1.5	15	-22/-30
	3	277	33	0.14	.70	2.12	93	1.5	15	-22/-30
	2	120	26	0.23	.77	2.96	99	1.5	15	-22/-30
FE15T8	2	277	26	0.12	.77	2.96	90	1.5	15	-22/-30
	3	120	61	0.52	.70	1.15	99	1.5	10	0/-18
	3	277	61	0.23	.70	1.15	97	1.5	10	0/-18
	2	120	47	0.40	.80	1.70	99	1.5	10	0/-18
F25T12	2	277	47	0.18	.80	1.70	96	1.5	15	0/-18

Safety and performance

UL Class P · UL Type 1 Outdoor · UL Type CC · UL Type HL · FCC – CLASS A Non-Consumer

Product is compliant with material restriction requirements of RoHS

See page E-1 for warranty information.

UltraMax® Professional Series
Instant Start Multi-Voltage 120–277V High-Efficiency
T8 Instant Start Ballasts For F17 (2 ft), F25 (3 ft), F32 (4 ft), F40 (5 ft) Lamps

78623 – GE332MAXP-N/ULTRA

UltraMax® P-Series Instant Start
Multi-Voltage High-Efficiency

3 or 2 – F32T8 120 to 277 "N" .87 BF UltraMax®P

- Energy-saving high-efficiency instant-start electronic ballast (>90%)
- Multi-voltage technology handles voltage from 120 to 277V
- UL Type CC Rating provides protection against arcing in electrical devices
- Anti-striation control for better light quality
- UL 55°C Ambient Temperature rating
- Cold temperature -22°F Minimum Starting Temperature

General characteristics

Ballast Type	Electronic – High-Efficiency Multivolt Instant Start
Starting Method	Instant start
Lamp Wiring	Parallel
Line Voltage Regulation (+/-)	10%
Ambient Temperature (MAX)	55°C (131°F)
Case Temperature (MAX)	70°C (158°F)
Ballast Factor	Normal
Sound Rating	A (20-24 decibels)
Power Factor Correction	Active
Sound Rating	A (20-24 decibels)
Additional Info	Anti-striation control, Auto-restart, Inherently Thermally Protected, UL Class P

Electrical characteristics

Supply Current Frequency	50 Hz/60 Hz

Order information

10 Pack	Pallet Pack	DIY Pack	IP Pack
78623		71722	

Dimensions

Wiring diagram – LFL 1C – see example on Page 10-61	
Case dimensions – Ref Drawing -A – see Page 10-62	
Length (L)	9.5 in (241 mm)
Width (W)	1.3 in (33 mm)
Height (H)	1.0 in (25.4 mm)
Mounting dimensions	
Mount Length (M)	8.9 in (226 mm)
Mount Width (X or F)	0.87 in (22 mm)
Mount Slots (MS)	0.3 in (8 mm)
Weight	0.8lbs
Exit Type	Side
Remote Mounting Distance to Lamp (F32T8)	18 ft
Remote Mounting Wire Gauge	18 AWG
Lead lengths	
Black	25 in (635 mm)
White	25 in (635 mm)
Blue	31 in (787 mm)
Red	37 in (940 mm)

Specifications by lamp and wattage

Lamp	# of Lamps	Line Volts (V)	System Watts (W)	Nom. Line Current (A)	System Ballast Factor	Ballast Efficacy Factor	Power Factor% (>=)	Crest Factor (<=)	THD% (<=)	Min. Starting Temp (°F/°C)
	3	120	82	0.70	.88	1.07	99	1.5	10	-22/-30
	3	277	81	0.30	.88	1.09	98	1.5	10	-22/-30
	2	120	64	0.54	.97	1.52	99	1.5	10	-22/-30
F32T8	2	277	63	0.24	.97	1.54	97	1.5	10	-22/-30
	3	120	77	0.65	.86	1.12	99	1.5	10	-22/-30
	3	277	76	0.28	.86	1.13	98	1.5	10	-22/-30
	2	120	59	0.50	.98	1.66	99	1.5	10	-22/-30
F32T8/WM	2	277	58	0.22	.98	1.69	97	1.5	15	-22/-30
	3	120	70	0.60	.84	1.20	99	1.5	10	-22/-30
	3	277	70	0.26	.84	1.20	98	1.5	10	-22/-30
	2	120	54	0.45	.94	1.74	99	1.5	10	-22/-30
F28T8	2	277	53	0.20	.94	1.77	97	1.5	15	-22/-30
	3	120	67	0.57	.87	1.30	99	1.5	10	-22/-30
	3	277	66	0.25	.87	1.32	98	1.5	10	-22/-30
	2	120	51	0.43	.93	1.82	99	1.5	10	-22/-30
F32T8/25W	2	277	51	0.19	.93	1.82	97	1.5	15	-22/-30
	3	120	67	0.57	.85	1.27	99	1.5	10	-22/-30
	3	277	67	0.25	.85	1.27	98	1.5	10	-22/-30
	2	120	51	0.43	.97	1.90	99	1.5	10	-22/-30
F25T8	2	277	51	0.19	.97	1.90	97	1.5	15	-22/-30
	3	120	45	0.40	.86	1.91	99	1.5	10	-22/-30
	3	277	45	0.18	.86	1.91	97	1.5	15	-22/-30
	2	120	35	0.30	.99	2.83	99	1.5	10	-22/-30
F17T8	2	277	36	0.14	.99	2.75	95	1.5	15	-22/-30
	3	120	36	0.31	.77	2.14	99	1.5	10	-22/-30
	3	277	36	0.15	.77	2.14	96	1.5	15	-22/-30
	2	120	28	0.25	.86	3.07	99	1.5	15	-22/-30
FE15T8	2	277	28	0.12	.86	3.07	93	1.5	20	-22/-30
	3	120	68	0.58	.78	1.15	99	1.5	10	0/-18
	3	277	67	0.25	.78	1.16	97	1.5	10	0/-18
	2	120	52	0.45	.89	1.71	99	1.5	10	0/-18
F25T12	2	277	52	0.20	.89	1.71	96	1.5	15	0/-18

Safety and performance

UL Class P · UL Type 1 Outdoor · UL Type CC · UL Type HL · FCC – CLASS A Non-Consumer

Product is compliant with material restriction requirements of RoHS

See page E-1 for warranty information.

UltraMax® Professional Series
Instant Start Multi-Voltage 120–277V High-Efficiency
T8 Instant Start Ballasts For F17 (2 ft), F25 (3 ft), F32 (4 ft), F40 (5 ft) Lamps

71422 – GE332MAXP-N+

UltraMax® P-Series Instant Start
Multi-Voltage High-Efficiency
3 or 2 – F32T8 120 to 277 "N+" 1.0 BF UltraMax®P

- Energy-saving high-efficiency instant-start electronic ballast (>90%)
- Multi-voltage technology handles voltage from 120 to 277V
- UL Type CC Rating provides protection against arcing in electrical devices
- Anti-striation control for better light quality
- UL 55°C Ambient Temperature rating
- Cold temperature -22°F Minimum Starting Temperature

General characteristics

Ballast Type	Electronic – High-Efficiency Multivolt Instant Start
Starting Method	Instant start
Lamp Wiring	Parallel
Line Voltage Regulation(+/-)	10%
Ambient Temperature (MAX)	55°C (131°F)
Case Temperature (MAX)	70°C (158°F)
Ballast Factor	Normal-High
Power Factor Correction	Active
Sound Rating	A (20-24 decibels)
Enclosure Type	Metal
Additional Info	Anti-striation control, Auto-restart, Inherently Thermally Protected, UL Class P

Electrical characteristics

Supply Current Frequency	50 Hz/60 Hz

Order information

10 Pack	Pallet Pack	DIY Pack	IP Pack
71422			

Dimensions

Wiring diagram – LFL 1C – see example on Page 10-61	
Case dimensions – Ref Drawing -A – see Page 10-62	
Length (L)	9.5 in (241 mm)
Width (W)	1.3 in (33 mm)
Height (H)	1.0 in (25.4 mm)
Mounting dimensions	
Mount Length (M)	8.9 in (226 mm)
Mount Width (X or F)	0.87 in (22 mm)
Mount Slots (MS)	0.3 in (8 mm)
Weight	0.8lbs
Exit Type	Side
Remote Mounting Distance to Lamp (F32T8)	18 ft
Remote Mounting Wire Gauge	18 AWG
Lead lengths	
Black	25 in (635 mm)
White	25 in (635 mm)
Blue	31 in (787 mm)
Red	37 in (940 mm)

Specifications by lamp and wattage

Lamp	# of Lamps	Line Volts (V)	System Watts (W)	Nom. Line Current (A)	System Ballast Factor	Ballast Efficacy Factor	Power Factor% (>=)	Crest Factor (<=)	THD% (<=)	Min. Starting Temp (°F/°C)
	3	120	93	0.78	1.01	1.09	99	1.5	10	-22/-30
	3	277	92	0.33	1.01	1.10	98	1.5	10	-22/-30
	2	120	73	0.61	1.13	1.55	99	1.5	10	-22/-30
F32T8	2	277	73	0.26	1.13	1.55	97	1.5	10	-22/-30
	3	120	87	0.73	1.00	1.15	99	1.5	10	-22/-30
	3	277	85	0.32	1.00	1.18	98	1.5	10	-22/-30
	2	120	62	0.52	1.10	1.77	99	1.5	10	-22/-30
F32T8/WM	2	277	61	0.23	1.10	1.80	97	1.5	10	-22/-30
	3	120	83	0.69	1.00	1.20	99	1.5	10	-22/-30
	3	277	82	0.30	1.00	1.22	98	1.5	10	-22/-30
	2	120	61	0.50	1.08	1.77	99	1.5	10	-22/-30
F28T8	2	277	60	0.22	1.08	1.80	97	1.5	10	-22/-30
	3	120	77	0.64	1.01	1.31	99	1.5	10	-22/-30
	3	277	76	0.27	1.01	1.33	98	1.5	10	-22/-30
	2	120	59	0.49	1.01	1.71	99	1.5	10	-22/-30
F32T8/25W	2	277	58	0.21	1.01	1.74	96	1.5	10	-22/-30
	3	120	77	0.64	1.01	1.31	99	1.5	10	-22/-30
	3	277	76	0.27	1.01	1.33	98	1.5	10	-22/-30
	2	120	59	0.49	1.14	1.93	99	1.5	10	-22/-30
F25T8	2	277	58	0.21	1.14	1.97	96	1.5	10	-22/-30
	3	120	54	0.46	1.03	1.91	99	1.5	10	-22/-30
	3	277	54	0.20	1.03	1.91	96	1.5	15	-22/-30
	2	120	42	0.35	1.03	2.45	99	1.5	10	-22/-30
F17T8	2	277	42	0.16	1.03	2.45	94	1.5	15	-22/-30
	3	120	44	0.37	1.00	2.27	99	1.5	10	-22/-30
	3	277	44	0.17	1.00	2.27	95	1.5	15	-22/-30
	2	120	34	0.30	1.00	2.94	99	1.5	15	-22/-30
FE15T8	2	277	35	0.14	1.00	2.86	92	1.5	15	-22/-30
	3	120	80	0.67	.93	1.16	99	1.5	10	0/-18
	3	277	79	0.29	.93	1.18	98	1.5	10	0/-18
	2	120	60	0.51	.93	1.55	99	1.5	10	0/-18
F25T12	2	277	60	0.22	.93	1.55	97	1.5	10	0/-18

Safety and performance

UL LISTED · UL Class P · UL Type 1 Outdoor · UL Type CC · UL Type HL · FCC – CLASS A Non-Consumer

NEMA Premium · Product is compliant with material restriction requirements of RoHS

See page E-1 for warranty information.

UltraMax® Professional Series
Instant Start Multi-Voltage 120–277V High-Efficiency
T8 Instant Start Ballasts For F17 (2 ft), F25 (3 ft), F32 (4 ft), F40 (5 ft) Lamps

71723 – GE432MAXP-H/ULTRA

UltraMax® P-Series Instant Start
Multi-Voltage High-Efficiency
4 or 3 – F32T8 120 to 277 "H" 1.18 BF UltraMax®P

- Energy-saving high-efficiency instant-start electronic ballast (>90%)
- Multi-voltage technology handles voltage from 120 to 277V
- UL Type CC Rating provides protection against arcing in electrical devices
- Anti-striation control for better light quality
- UL 55°C Ambient Temperature rating
- Cold temperature -22°F Minimum Starting Temperature

General characteristics

Ballast Type	Electronic – High-Efficiency Multivolt Instant Start
Starting Method	Instant start
Lamp Wiring	Parallel
Line Voltage Regulation(+/-)	10%
Ambient Temperature (MAX)	55°C (131°F)
Case Temperature (MAX)	90°C (194°F)
Ballast Factor	High
Power Factor Correction	Active
Sound Rating	A (20-24 decibels)
Enclosure Type	Metal
Additional Info	Anti-striation control, Auto-restart, Inherently Thermally Protected, UL Class P

Electrical characteristics

Supply Current Frequency	50 Hz/60 Hz

Order information

10 Pack	Pallet Pack	DIY Pack	IP Pack
71723	71724		

Dimensions

Wiring diagram – LFL 1D – see example on Page 10-61	
Case dimensions – Ref Drawing -A – see Page 10-62	
Length (L)	9.5 in (241 mm)
Width (W)	1.7 in (43 mm)
Height (H)	1.18 in (30 mm)
Mounting dimensions	
Mount Length (M)	8.9 in (226 mm)
Mount Width (X or F)	1.05 in (27 mm)
Mount Slots (MS)	0.3 in (8 mm)
Weight	1.4lbs
Exit Type	Side
Remote Mounting Distance to Lamp (F32T8)	18 ft
Remote Mounting Wire Gauge	18 AWG
Lead lengths	
Black	25 in (635 mm)
White	25 in (635 mm)
Red & Blue	31 in (787 mm)
Yellow	39 in (991 mm)

Specifications by lamp and wattage

Lamp	# of Lamps	Line Volts (V)	System Watts (W)	Nom. Line Current (A)	System Ballast Factor	Ballast Efficacy Factor	Power Factor% (>=)	Crest Factor (<=)	THD% (<=)	Min. Starting Temp (°F/°C)
	4	120	148	1.30	1.18	.80	99	1.4	10	-22/-30
	4	277	146	0.55	1.18	.81	98	1.4	10	-22/-30
	3	120	119	1.07	1.28	1.08	99	1.4	10	-22/-30
F32T8	3	277	117	0.46	1.28	1.09	97	1.4	15	-22/-30
	4	120	139	1.21	1.18	.85	99	1.4	10	50/10
	4	277	136	0.51	1.18	.87	97	1.4	10	50/10
	3	120	113	0.99	1.25	1.11	99	1.4	10	50/10
F32T8/WM	3	277	112	0.41	1.25	1.12	97	1.4	16	50/10
	4	120	127	1.10	1.18	.93	99	1.4	10	50/10
	4	277	125	0.48	1.18	.94	98	1.4	10	50/10
	3	120	105	0.91	1.24	1.18	99	1.4	10	50/10
F28T8	3	277	102	0.40	1.24	1.22	97	1.4	16	50/10
	4	120	120	1.06	1.18	.98	99	1.4	10	60/16
	4	277	116	0.45	1.18	1.02	98	1.4	10	60/16
	3	120	99	0.88	1.24	1.25	99	1.4	10	60/16
F32T8/25W	3	277	95	0.38	1.24	1.31	97	1.4	10	60/16
	4	120	119	0.45	1.16	.97	97	1.4	10	-22/-30
	4	277	121	1.06	1.16	.96	99	1.4	10	-22/-30
	3	120	101	0.87	1.27	1.26	99	1.4	10	-22/-30
F25T8	3	277	100	0.38	1.27	1.27	96	1.4	17	-22/-30
	4	120	79	0.62	1.16	1.47	99	1.4	10	-22/-30
	4	277	78	0.31	1.16	1.49	96	1.4	10	-22/-30
	3	120	62	0.57	1.25	2.02	99	1.4	10	-22/-30
F17T8	3	277	62	0.27	1.25	2.02	95	1.4	21	-22/-30
	4	120	62	0.54	1.03	1.66	99	1.4	10	0/-18
	4	277	62	0.26	1.03	1.66	95	1.4	20	0/-18
	3	120	51	0.45	1.12	2.20	99	1.4	10	0/-18
FE15T8	3	277	52	0.22	1.12	2.15	92	1.4	20	0/-18
	3	120	146	1.27	1.22	.84	99	1.4	10	-22/-30
F40T8	3	277	142	0.54	1.22	.86	97	1.4	14	-22/-30
	4	120	125	1.10	1.11	.89	99	1.4	10	0/-18
	4	277	122	0.47	1.11	.91	97	1.4	14	0/-18
	3	120	101	0.90	1.22	1.21	99	1.4	10	0/-18
F25T12	3	277	100	0.39	1.22	1.22	97	1.4	17	0/-18

Safety and performance

UL Class P UL Type 1 Outdoor UL Type CC UL Type HL FCC – CLASS A Non-Consumer

Product is compliant with material restriction requirements of RoHS

See page E-1 for warranty information.

UltraMax® Professional Series
Instant Start Multi-Voltage 120–277V High-Efficiency
T8 Instant Start Ballasts For F17 (2 ft), F25 (3 ft), F32 (4 ft), F40 (5 ft) Lamps

78625 – GE432MAXP-L/ULTRA

UltraMax® P-Series Instant Start
Multi-Voltage High-Efficiency
4 or 3 – F32T8 120 to 277 "L" .77 BF UltraMax®P

- Energy-saving high-efficiency instant-start electronic ballast (>90%)
- Multi-voltage technology handles voltage from 120 to 277V
- UL Type CC Rating provides protection against arcing in electrical devices
- Anti-striation control for better light quality
- UL 55°C Ambient Temperature rating
- Cold temperature -22°F Minimum Starting Temperature

General characteristics

Ballast Type	Electronic – High-Efficiency Multivolt Instant Start
Starting Method	Instant start
Lamp Wiring	Parallel
Line Voltage Regulation(+/-)	10%
Ambient Temperature (MAX)	55°C (131°F)
Case Temperature (MAX)	70°C (158°F)
Ballast Factor	Low
Power Factor Correction	Active
Sound Rating	A (20-24 decibels)
Enclosure Type	Metal
Additional Info	Anti-striation control, Auto-restart, Inherently Thermally Protected, UL Class P

Electrical characteristics

Supply Current Frequency	50 Hz/60 Hz

Order information

10 Pack	Pallet Pack	DIY Pack	IP Pack
78625			

Dimensions

Wiring diagram – LFL 1D – see example on Page 10-61	
Case dimensions – Ref Drawing -A – see Page 10-62	
Length (L)	9.5 in (241 mm)
Width (W)	1.3 in (33 mm)
Height (H)	1.0 in (25.4 mm)
Mounting dimensions	
Mount Length (M)	8.9 in (226 mm)
Mount Width (X or F)	0.87 in (22 mm)
Mount Slots (MS)	0.3 in (8 mm)
Weight	0.9lbs
Exit Type	Side
Remote Mounting Distance to Lamp (F32T8)	18 ft
Remote Mounting Wire Gauge	18 AWG
Lead lengths	
Black	25 in (635 mm)
White	25 in (635 mm)
Red & Blue	31 in (787 mm)
Yellow	39 in (991 mm)

Specifications by lamp and wattage

Lamp	# of Lamps	Line Volts (V)	System Watts (W)	Nom. Line Current (A)	System Ballast Factor	Ballast Efficacy Factor	Power Factor% (>=)	Crest Factor (<=)	THD% (<=)	Min. Starting Temp (°F/°C)
	4	120	98	0.82	.78	.80	99	1.5	10	-22/-30
	4	277	96	0.35	.78	.81	98	1.5	10	-22/-30
	3	120	84	0.72	.88	1.05	99	1.5	10	-22/-30
F32T8	3	277	83	0.31	.88	1.06	98	1.5	10	-22/-30
	4	120	92	0.79	.76	.83	99	1.5	10	-22/-30
	4	277	91	0.34	.76	.84	98	1.5	10	-22/-30
	3	120	77	0.66	.83	1.08	99	1.5	10	-22/-30
F32T8/WM	3	277	76	0.28	.83	1.09	97	1.5	10	-22/-30
	4	120	85	0.72	.75	.88	99	1.5	10	-22/-30
	4	277	84	0.31	.75	.89	98	1.5	10	-22/-30
	3	120	68	0.59	.81	1.19	99	1.5	10	-22/-30
F28T8	3	277	67	0.26	.81	1.21	97	1.5	10	-22/-30
	4	120	78	0.66	.77	.99	99	1.5	10	-22/-30
	4	277	77	0.29	.77	1.00	98	1.5	10	-22/-30
	3	120	62	0.52	.81	1.31	99	1.5	10	-22/-30
F32T8/25W	3	277	61	0.22	.81	1.33	97	1.5	10	-22/-30
	4	120	80	0.67	.76	.95	99	1.5	10	-22/-30
	4	277	79	0.29	.76	.96	98	1.5	10	-22/-30
	3	120	66	0.55	.84	1.27	99	1.5	10	-22/-30
F25T8	3	277	65	0.25	.84	1.29	97	1.5	10	-22/-30
	4	120	56	0.47	.79	1.41	99	1.5	10	-22/-30
	4	277	56	0.21	.79	1.41	96	1.5	10	-22/-30
	3	120	47	0.40	.86	1.83	99	1.5	10	-22/-30
F17T8	3	277	47	0.18	.86	1.83	95	1.5	15	-22/-30
	4	120	44	0.38	.76	1.73	99	1.5	10	-22/-30
	4	277	44	0.18	.76	1.73	95	1.5	10	-22/-30
	3	120	36	0.32	.76	2.11	99	1.5	10	-22/-30
FE15T8	3	277	37	0.15	.76	2.05	93	1.5	15	-22/-30
	4	120	81	0.69	.76	.94	99	1.5	10	0/-18
	4	277	81	0.30	.76	.94	98	1.5	10	0/-18
	3	120	68	0.58	.76	1.12	99	1.5	10	0/-18
F25T12	3	277	67	0.25	.76	1.13	97	1.5	10	0/-18

Safety and performance

UL Class P · UL Type 1 Outdoor · UL Type CC · UL Type HL · FCC – CLASS A Non-Consumer

Product is compliant with material restriction requirements of RoHS

See page E-1 for warranty information.

UltraMax® Professional Series
Instant Start Multi-Voltage 120–277V High-Efficiency
T8 Instant Start Ballasts For F17 (2 ft), F25 (3 ft), F32 (4 ft), F40 (5 ft) Lamps

78627 – GE432MAXP-N/ULTRA

UltraMax® P-Series Instant Start
Multi-Voltage High-Efficiency
4 or 3 – F32T8 120 to 277 "N" .87 BF UltraMax P

- Energy-saving high-efficiency instant-start electronic ballast (>90%)
- Multi-voltage technology handles voltage from 120 to 277V
- UL Type CC Rating provides protection against arcing in electrical devices
- Anti-striation control for better light quality
- UL 55°C Ambient Temperature rating
- Cold temperature -22°F Minimum Starting Temperature

General characteristics

Ballast Type	Electronic – High-Efficiency Multivolt Instant Start
Starting Method	Instant start
Lamp Wiring	Parallel
Line Voltage Regulation(+/-)	10%
Ambient Temperature (MAX)	55°C (131°F)
Case Temperature (MAX)	70°C (158°F)
Ballast Factor	Normal
Power Factor Correction	Active
Sound Rating	A (20-24 decibels)
Enclosure Type	Metal
Additional Info	Anti-striation control, Auto-restart, Inherently Thermally Protected, UL Class P

Electrical characteristics

Supply Current Frequency	50 Hz/60 Hz

Order information

10 Pack	Pallet Pack	DIY Pack	IP Pack
78627		71730	

Dimensions

Wiring diagram – LFL 1D – see example on Page 10-61	
Case dimensions – Ref Drawing -A – see Page 10-62	
Length (L)	9.5 in (241 mm)
Width (W)	1.3 in (33 mm)
Height (H)	1.0 in (25.4 mm)
Mounting dimensions	
Mount Length (M)	8.9 in (226 mm)
Mount Width (X or F)	0.87 in (22 mm)
Mount Slots (MS)	0.3 in (8 mm)
Weight	0.9lbs
Exit Type	Side
Remote Mounting Distance to Lamp (F32T8)	18 ft
Remote Mounting Wire Gauge	18 AWG
Lead lengths	
Black	25 in (635 mm)
White	25 in (635 mm)
Red & Blue	31 in (787 mm)
Yellow	39 in (991 mm)

Specifications by lamp and wattage

Lamp	# of Lamps	Line Volts (V)	System Watts (W)	Nom. Line Current (A)	System Ballast Factor	Ballast Efficacy Factor	Power Factor% (>=)	Crest Factor (<=)	THD% (<=)	Min. Starting Temp (°F/°C)
	4	120	110	0.93	.88	.80	99	1.5	10	-22/-30
	4	277	108	0.4	.88	.81	98	1.5	10	-22/-30
	3	120	92	0.78	.96	1.04	99	1.5	10	-22/-30
F32T8	3	277	91	0.34	.96	1.05	98	1.5	10	-22/-30
	4	120	103	0.87	.88	.85	99	1.5	10	-22/-30
	4	277	101	0.37	.88	.87	98	1.5	10	-22/-30
	3	120	85	0.73	.97	1.14	99	1.5	10	-22/-30
F32T8/WM	3	277	84	0.31	.97	1.15	98	1.5	10	-22/-30
	4	120	94	0.80	.84	.89	99	1.5	10	-22/-30
	4	277	92	0.34	.84	.91	98	1.5	10	-22/-30
	3	120	77	0.66	.93	1.21	99	1.5	10	-22/-30
F28T8	3	277	76	0.29	.93	1.22	98	1.5	10	-22/-30
	4	120	87	0.73	.87	1.00	99	1.5	10	-22/-30
	4	277	87	0.32	.87	1.00	98	1.5	10	-22/-30
	3	120	72	0.60	.89	1.24	99	1.5	10	-22/-30
F32T8/25W	3	277	71	0.26	.89	1.25	97	1.5	10	-22/-30
	4	120	89	0.74	.86	.97	99	1.5	10	-22/-30
	4	277	88	0.32	.86	.98	98	1.5	10	-22/-30
	3	120	74	0.62	.97	1.31	99	1.5	10	-22/-30
F25T8	3	277	73	0.27	97	1.33	97	1.5	10	-22/-30
	4	120	61	0.53	.89	1.46	99	1.5	10	-22/-30
	4	277	61	0.23	.89	1.46	97	1.5	10	-22/-30
	3	120	51	0.44	.99	1.94	99	1.5	10	-22/-30
F17T8	3	277	51	0.20	.99	1.94	96	1.5	10	-22/-30
	4	120	48	0.42	.77	1.60	99	1.5	10	-22/-30
	4	277	48	0.19	.77	1.60	96	1.5	10	-22/-30
	3	120	41	0.35	.85	2.07	99	1.5	10	-22/-30
FE15T8	3	277	40	0.17	.85	2.13	94	1.5	10	-22/-30
	4	120	91	0.78	.79	.87	99	1.5	10	0/-18
	4	277	90	0.33	.79	.88	98	1.5	10	0/-18
	3	120	76	0.65	.87	1.14	99	1.5	10	0/-18
F25T12	3	277	75	0.28	.87	1.16	98	1.5	10	0/-18

Safety and performance

UL Class P UL Type 1 Outdoor UL Type CC UL Type HL FCC – CLASS A Non-Consumer

Product is compliant with material restriction requirements of RoHS

See page E-1 for warranty information.

UltraMax® Professional Series
Instant Start Multi-Voltage 120–277V High-Efficiency
T8 Instant Start Ballasts For F17 (2 ft), F25 (3 ft), F32 (4 ft), F40 (5 ft) Lamps

71423 – GE432MAXP-N+

UltraMax® P-Series Instant Start
Multi-Voltage High-Efficiency
4 or 3 – F32T8 120 to 277 "N+" 1.0 BF UltraMax®P

- Energy-saving high-efficiency instant-start electronic ballast (>90%)
- Multi-voltage technology handles voltage from 120 to 277V
- UL Type CC Rating provides protection against arcing in electrical devices
- Anti-striation control for better light quality
- Cold temperature -22°F Minimum Starting Temperature

General characteristics

Ballast Type	Electronic – High-Efficiency Multivolt Instant Start
Starting Method	Instant start
Lamp Wiring	Parallel
Line Voltage Regulation(+/-)	10%
Ambient Temperature (MAX)	40°C (104°F)
Case Temperature (MAX)	70°C (158°F)
Ballast Factor	Normal-High
Power Factor Correction	Active
Sound Rating	A (20-24 decibels)
Enclosure Type	Metal
Additional Info	Anti-striation control, Auto-restart, Inherently Thermally Protected, UL Class P

Electrical characteristics

Supply Current Frequency	50 Hz/60 Hz

Order information

10 Pack	Pallet Pack	DIY Pack	IP Pack
71423			

Dimensions

Wiring diagram – LFL 1D – see example on Page 10-61	
Case dimensions – Ref Drawing -A – see Page 10-62	
Length (L)	9.5 in (241 mm)
Width (W)	2.4 in (61 mm)
Height (H)	1.6 in (40 mm)
Mounting dimensions	
Mount Length (M)	8.9 in (226 mm)
Mount Width (X or F)	1.7 in (43 mm)
Mount Slots (MS)	0.3 in (8 mm)
Weight	2.16lbs
Exit Type	Side
Remote Mounting Distance to Lamp (F32T8)	12 ft
Remote Mounting Wire Gauge	18 AWG
Lead lengths	
Black	25 in (635 mm)
White	25 in (635 mm)
Red & Blue	31 in (787 mm)
Yellow	47 in (1194 mm)

Specifications by lamp and wattage

Lamp	# of Lamps	Line Volts (V)	System Watts (W)	Nom. Line Current (A)	System Ballast Factor	Ballast Efficacy Factor	Power Factor% (>=)	Crest Factor (<=)	THD% (<=)	Min. Starting Temp (°F/°C)
	4	120	124	1.03	1.00	.81	99	1.5	10	-22/-30
	4	277	121	0.45	1.00	.83	98	1.5	10	-22/-30
	3	120	97	0.81	0.97	1.00	99	1.5	10	-22/-30
F32T8	3	277	113	0.45	1.15	1.02	97	1.5	10	-22/-30
	4	120	119	1	1.00	.84	99	1.5	10	60/16
	4	277	117	0.44	1.00	.86	98	1.5	10	60/16
	3	120	92	0.77	.99	1.08	99	1.5	10	60/16
F32T8/WM	3	277	92	0.35	.99	1.08	97	1.5	10	60/16
	4	120	114	0.95	1.00	.88	99	1.5	10	60/16
	4	277	96	0.36	1.00	1.04	97	1.5	10	60/16
	3	120	89	0.74	.99	1.12	99	1.5	10	60/16
F28T8	3	277	88	0.33	.99	1.13	96	1.5	10	60/16
	4	120	110	0.92	.96	.87	99	1.5	10	0/-18
	4	277	108	0.14	.96	.89	97	1.5	10	0/-18
	3	120	86	0.72	.97	1.13	99	1.5	10	0/-18
F25T12	3	277	86	0.32	.97	1.13	96	1.5	10	0/-18

Safety and performance

UL Class P · UL Type 1 Outdoor · UL Type CC · UL Type HL · FCC – CLASS A Non-Consumer

Product is compliant with material restriction requirements of RoHS

See page E-1 for warranty information.

UltraMax® Professional Series
Instant Start Multi-Voltage 120–277V High-Efficiency
T8 Instant Start Ballasts For F17 (2 ft), F25 (3 ft), F32 (4 ft), F40 (5 ft) Lamps

74117 – GE632MAXP-H90

UltraMax® P-Series Instant Start
Multi-Voltage High-Efficiency
6 or 5 – F32T8 120 to 277 "H" 1.18 BF UltraMax®P

- Energy-saving high-efficiency instant-start electronic ballast (>95%)
- Multi-voltage technology handles voltage from 120 to 277V
- UL Type CC Rating provides protection against arcing in electrical devices
- Anti-striation control for better light quality
- UL 55°C Ambient Temperature rating
- High temperature 90°C max case
- Cold temperature -22°F Minimum Starting Temperature

General characteristics

Ballast Type	Electronic – High-Efficiency Multivolt Instant Start
Starting Method	Instant start
Lamp Wiring	Parallel
Line Voltage Regulation(+/-)	10%
Ambient Temperature (MAX)	55°C (131°F)
Case Temperature (MAX)	90°C (194°F)
Ballast Factor	High
Power Factor Correction	Active
Sound Rating	A (20-24 decibels)
Enclosure Type	Metal
Additional Info	Anti-striation control, Auto-restart, Inherently Thermally Protected, UL Class P

Electrical characteristics

Supply Current Frequency	50Hz/60Hz

Order information

10 Pack	Pallet Pack	DIY Pack	IP Pack
74117			

Dimensions

Wiring diagram – LFL 6H – see example on Page 10-61	
Case dimensions – Ref Drawing -A – see Page 10-62	
Length (L)	11.75 in (299 mm)
Width (W)	1.7 in (43 mm)
Height (H)	1.18 in (30 mm)
Mounting dimensions	
Mount Length (M)	11.1 in (283 mm)
Mount Width (X or F)	
Mount Slots (MS)	0.3 in (8 mm)
Weight	3.1lbs
Exit Type	Side
Remote Mounting Distance to Lamp (F32T8)	18 ft
Remote Mounting Wire Gauge	18 AWG
Lead lengths	
Black	25 in (635 mm)
White	25 in (635 mm)
Red & Blue	34 in (864 mm)
Yellow	36 in (914 mm)

Specifications by lamp and wattage

Lamp	# of Lamps	Line Volts (V)	System Watts (W)	Nom. Line Current (A)	System Ballast Factor	Ballast Efficacy Factor	Power Factor% (>=)	Crest Factor (<=)	THD% (<=)	Min. Starting Temp (°F/°C)
	6	120	221	1.94	1.18	.53	99	1.5	10	-20/-29
	6	277	215	0.82	1.18	.55	97	1.5	10	-20/-29
	5	120	197	1.73	1.25	.63	99	1.5	10	-20/-29
F32T8	5	277	192	0.73	1.25	.65	97	1.5	13	-20/-29
	6	120	205	1.8	1.18	.58	99	1.5	10	60/16
	6	277	200	0.76	1.18	.59	97	1.5	10	60/16
	5	120	182	1.6	1.23	.68	99	1.5	10	60/16
F32T8/WM	5	277	178	0.68	1.23	.69	96	1.5	16	60/16
	6	120	187	1.64	1.18	.63	99	1.5	10	60/16
	6	277	184	0.7	1.18	.64	96	1.5	13	60/16
	5	120	166	1.45	1.20	.72	99	1.5	10	60/16
F28T8	5	277	164	0.63	1.20	.73	96	1.5	16	60/16
	6	120	178	1.57	1.18	.66	99	1.5	10	-20/-29
	6	277	176	0.68	1.18	.67	96	1.5	16	-20/-29
	5	120	159	1.4	1.16	.73	99	1.5	10	-20/-29
F32T8/25W	5	277	157	0.61	1.16	.74	95	1.5	18	-20/-29
	6	120	122	1.08	1.17	.96	99	1.5	10	-20/-29
	6	277	121	0.5	1.17	.97	90	1.5	24	-20/-29
	5	120	107	0.95	1.24	1.16	99	1.5	10	-20/-29
F17T8	5	277	106	0.44	1.24	1.17	88	1.5	26	-20/-29
	5	120	231	2.03	1.18	.51	99	1.5	10	0/-18
F40T8	5	277	225	0.86	1.18	.52	97	1.5	10	0/-18

Safety and performance

UL Class P · UL Type 1 Outdoor · UL Type CC · UL Type HL · FCC – CLASS A Non-Consumer

Product is compliant with material restriction requirements of RoHS

See page E-1 for warranty information.

UltraMax® Professional Series
Instant Start Multi-Voltage 120–277V High-Efficiency
T8 Instant Start Ballasts For 46-59W 4ft-8ft Slimline Lamps

49767 – GE259MAXP-N/ULTRA

UltraMax® P-Series Instant Start
Multi-Voltage High-Efficiency
2 or 1 – F96T8 120 to 277 "N" 0.87 BF UltraMax®P

- Energy-saving high-efficiency instant-start electronic ballast (>90%)
- Multi-voltage technology handles voltage from 120 to 277V
- Anti-striation control for better light quality
- Cold temperature 0°F Minimum Starting Temperature

General characteristics

Ballast Type	Electronic – High-Efficiency Multivolt Instant Start
Starting Method	Instant start
Lamp Wiring	Parallel
Line Voltage Regulation(+/-)	10%
Ambient Temperature (MAX)	40°C (104°F)
Case Temperature (MAX)	70°C (158°F)
Ballast Factor	Normal
Power Factor Correction	Active
Sound Rating	A (20-24 decibels)
Enclosure Type	Metal
Additional Info	Anti-striation control, Auto-restart, Inherently Thermally Protected, UL Class P

Electrical characteristics

Supply Current Frequency	50 Hz/60 Hz

Order information

10 Pack	Pallet Pack	DIY Pack	IP Pack
49767		23954	

Dimensions

Wiring diagram – LFL 1B – see example on Page 10-61	
Case dimensions – Ref Drawing -A – see Page 10-62	
Length (L)	9.5 in (241 mm)
Width (W)	1.3 in (33 mm)
Height (H)	1.18 in (30 mm)
Mounting dimensions	
Mount Length (M)	8.9 in (226 mm)
Mount Width (X or F)	0.87 in (22 mm)
Mount Slots (MS)	0.3 in (8 mm)
Weight	1.4lbs
Exit Type	Side
Remote Mounting Distance to Lamp (F32T8)	18 ft
Remote Mounting Wire Gauge	18 AWG
Lead lengths	
Black	22 in (559 mm)
White	22 in (559 mm)
Blue	46 in (1168 mm)
Red	78 in (1981 mm)

Specifications by lamp and wattage

Lamp	# of Lamps	Line Volts (V)	System Watts (W)	Nom. Line Current (A)	System Ballast Factor	Ballast Efficacy Factor	Power Factor% (>=)	Crest Factor (<=)	THD% (<=)	Min. Starting Temp (°F/°C)
	2	120	107	0.91	.87	.81	99	1.7	10	0/-18
	2	277	105	0.4	.87	.83	98	1.7	15	0/-18
	1	120	62	0.53	.87	1.40	99	1.7	10	0/-18
F96T8	1	277	62	0.24	.87	1.40	97	1.7	20	0/-18
	2	120	102	0.87	.87	.85	99	1.7	10	50/10
	2	277	100	0.38	.87	.87	98	1.7	15	50/10
	1	120	59	0.5	.87	1.47	99	1.7	10	50/10
F96T8/WM	1	277	59	0.23	.87	1.47	97	1.7	20	50/10
	2	120	85	0.78	.89	1.05	99	1.7	10	50/10
	2	277	84	0.32	.89	1.06	98	1.7	15	50/10
	1	120	59	0.5	.87	1.47	99	1.7	10	50/10
F96T8/WMP	1	277	59	0.23	.87	1.47	97	1.7	20	50/10
	2	120	79	0.72	.89	1.13	99	1.7	10	0/-18
	2	277	78	0.29	.89	1.14	98	1.7	13	0/-18
	1	120	44	0.39	.87	1.98	99	1.7	10	0/-18
F72T8	1	277	44	0.17	.87	1.98	96	1.7	20	0/-18

Safety and performance

UL Class P UL Type 1 Outdoor UL Type HL FCC – CLASS A Non-Consumer

Product is compliant with material restriction requirements of RoHS

See page E-1 for warranty information.

UltraMax® Professional Series
Instant Start Multi-Voltage 120–277V High-Efficiency
T8 Instant Start Ballasts For 46-59W 4ft-8ft Slimline Lamps

73199 – GE259MAXP-L/ULTRA

UltraMax® P-Series Instant Start
Multi-Voltage High-Efficiency

2 or 1 – F96T8 120 to 277 "L" 0.77 BF UltraMax®P

- Energy-saving high-efficiency instant-start electronic ballast (>90%)
- Multi-voltage technology handles voltage from 120 to 277V
- Anti-striation control for better light quality
- Cold temperature 0°F Minimum Starting Temperature

General characteristics

Ballast Type	Electronic – High-Efficiency Multivolt Instant Start
Starting Method	Instant start
Lamp Wiring	Parallel
Line Voltage Regulation(+/-)	10%
Ambient Temperature (MAX)	40°C (104°F)
Case Temperature (MAX)	70°C (158°F)
Ballast Factor	Low
Power Factor Correction	Active
Sound Rating	A (20-24 decibels)
Enclosure Type	Metal
Additional Info	Anti-striation control, Auto-restart, Inherently Thermally Protected, UL Class P

Electrical characteristics

Supply Current Frequency	50Hz/60 Hz

Order information

10 Pack	Pallet Pack	DIY Pack	IP Pack
73199			

Dimensions

Wiring diagram – LFL 1B – see example on Page 10-61	
Case dimensions – Ref Drawing -A – see Page 10-62	
Length (L)	9.5 in (241 mm)
Width (W)	1.3 in (33 mm)
Height (H)	1.18 in (30 mm)
Mounting dimensions	
Mount Length (M)	8.9 in (226 mm)
Mount Width (X or F)	0.87 in (22 mm)
Mount Slots (MS)	0.3 in (8 mm)
Weight	1.4lbs
Exit Type	Side
Remote Mounting Distance to Lamp (F32T8)	18 ft
Remote Mounting Wire Gauge	18 AWG
Lead lengths	
Black	22 in (559 mm)
White	22 in (559 mm)
Blue	46 in (1168 mm)
Red	78 in (1981 mm)

Specifications by lamp and wattage

Lamp	# of Lamps	Line Volts (V)	System Watts (W)	Nom. Line Current (A)	System Ballast Factor	Ballast Efficacy Factor	Power Factor% (>=)	Crest Factor (<=)	THD% (<=)	Min. Starting Temp (°F/°C)
	2	120	95	0.81	.77	.81	99	1.7	10	0/-18
	2	277	94	0.35	.77	.82	99	1.7	15	0/-18
	1	120	59	0.5	.92	1.56	99	1.7	10	0/-18
F96T8	1	277	59	0.22	.92	1.56	97	1.7	20	0/-18
	2	120	93	0.79	.77	.83	99	1.7	10	60/16
	2	277	91	0.34	.77	.85	98	1.7	15	60/16
	1	120	58	0.48	.92	1.59	99	1.7	10	60/16
F96T8/WM	1	277	58	0.21	.92	1.59	97	1.7	20	60/16
	2	120	89	0.74	.77	.87	99	1.7	10	60/16
	2	277	87	0.32	.77	.89	98	1.7	15	60/16
	1	120	54	0.5	.92	1.70	99	1.7	10	60/16
F96T8/WMP	1	277	54	0.2	.92	1.70	96	1.7	20	60/16
	2	120	65	0.54	.79	1.22	99	1.7	10	0/-18
	2	277	64	0.24	.79	1.23	97	1.7	13	0/-18
	1	120	41	0.34	.94	2.29	99	1.7	10	0/-18
F72T8	1	277	41	0.16	.94	2.29	97	1.7	20	0/-18

Safety and performance

UL Class P · UL Type 1 Outdoor · UL Type HL · FCC – CLASS A Non-Consumer

Product is compliant with material restriction requirements of RoHS

See page E-1 for warranty information.

UltraMax® Professional Series MultiVolt High Output 120–277V
T8 Instant Start Ballasts For 44-86W 4ft-8ft HO Lamps

63888 – GE286MAXP-HO-N

UltraMax® P-Series Multivolt High Output 120V-277V

2 or 1 – F96T8HO IS 120 to 277 "N" 0.87 BF

- High-performance electronic ballast for all general fluorescent applications
- Instant start electronic ballast for long lamp starting cycles and low initial cost
- Multi-voltage technology handles voltage from 120 to 277V
- Parallel lamp operation means system maintenance is easier to manage
- Anti-striation control for better light quality
- Cold temperature -22°F Minimum Starting Temperature

General characteristics

Ballast Type	Electronic –Multivolt Instant Start
Starting Method	Instant start
Lamp Wiring	Parallel
Line Voltage Regulation(+/-)	10%
Ambient Temperature (MAX)	40°C (104°F)
Case Temperature (MAX)	70°C (158°F)
Ballast Factor	Normal
Power Factor Correction	Active
Sound Rating	A (20-24 decibels)
Enclosure Type	Metal
Additional Info	Auto-restart, Inherently Thermally Protected, UL Class P

Electrical characteristics

Supply Current Frequency	50 Hz/60 Hz

Order information

10 Pack	Pallet Pack	DIY Pack	IP Pack
63888			

Dimensions

Wiring diagram – LFL 1B – see example on Page 10-61	
Case dimensions – Ref Drawing -A – see Page 10-62	
Length (L)	9.5 in (241 mm)
Width (W)	1.7 in (43 mm)
Height (H)	1.18 in (30 mm)
Mounting dimensions	
Mount Length (M)	8.9 in (226 mm)
Mount Width (X or F)	1.05 in (27 mm)
Mount Slots (MS)	0.3 in (8 mm)
Weight	1.40lbs
Exit Type	Side
Remote Mounting Distance to Lamp (F32T8)	18 ft
Remote Mounting Wire Gauge	18 AWG
Lead lengths	
Black	22 in (559 mm)
White	22 in (559 mm)
Blue	46 in (1168 mm)
Red	78 in (1981 mm)

Specifications by lamp and wattage

Lamp	# of Lamps	Line Volts (V)	System Watts (W)	Nom. Line Current (A)	System Ballast Factor	Ballast Efficacy Factor	Power Factor% (>=)	Crest Factor (<=)	THD% (<=)	Min. Starting Temp (°F/°C)
	2	120	111	0.95	1.37	1.23	99	1.7	10	-22/-30
	2	277	110	0.41	1.37	1.25	97	1.7	10	-22/-30
	1	120	70	0.58	1.63	2.33	99	1.7	10	-22/-30
F96T849W	1	277	70	0.26	1.63	2.33	95	1.7	10	-22/-30
	2	120	124	1.10	1.37	1.10	99	1.7	10	-22/-30
	2	277	122	0.46	1.37	1.12	98	1.7	10	-22/-30
	1	120	77	0.68	1.63	2.11	99	1.7	10	-22/-30
F96T8WMP	1	277	77	0.30	1.63	2.11	96	1.7	10	-22/-30
	2	120	135	1.18	1.14	.85	99	1.7	10	-22/-30
	2	277	133	0.50	1.15	.86	98	1.7	10	-22/-30
	1	120	84	0.73	1.35	1.61	99	1.7	10	-22/-30
F96T8WM	1	277	84	0.32	1.35	1.61	96	1.7	10	-22/-30
	2	120	145	1.25	.78	.54	99	1.7	10	-22/-30
	2	277	142	0.54	.78	.55	98	1.7	10	-22/-30
	1	120	91	0.78	.91	1.01	99	1.7	10	-22/-30
F96T8HO	1	277	90	0.35	.92	1.02	97	1.7	10	-22/-30
	2	120	142	1.24	1.15	.81	99	1.7	10	-22/-30
	2	277	140	0.52	1.15	.82	98	1.7	10	-22/-30
	1	120	88	0.76	1.35	1.54	99	1.7	10	-22/-30
F96T8	1	277	87	0.34	1.36	1.56	97	1.7	10	-22/-30
	2	120	115	1.02	.82	.71	99	1.7	10	-22/-30
	2	277	114	0.43	.82	.72	97	1.7	16	-22/-30
	1	120	73	0.64	.95	1.30	99	1.7	10	-22/-30
F72T8HO	1	277	72	0.28	.95	1.31	95	1.7	22	-22/-30
	2	120	95	0.84	.81	.86	99	1.7	10	-22/-30
	2	277	92	0.35	.81	.88	97	1.7	18	-22/-30
	1	120	60	0.53	.95	1.58	99	1.7	11	-22/-30
F60T8HO	1	277	62	0.24	.95	1.53	94	1.7	23	-22/-30
	2	120	78	0.68	.79	1.01	99	1.7	10	-22/-30
	2	277	78	0.30	.79	1.01	96	1.7	10	-22/-30
	1	120	49	0.43	.93	1.91	99	1.7	10	-22/-30
F58T8	1	277	50	0.20	.93	1.87	93	1.7	10	-22/-30
	2	120	78	0.70	.82	1.05	99	1.7	10	-22/-30
	2	277	77	0.30	.82	1.06	96	1.7	21	-22/-30
	1	120	51	0.45	.95	1.87	99	1.7	13	-22/-30
F48T8HO	1	277	51	0.20	.95	1.87	93	1.7	26	-22/-30
	2	120	97	0.85	1.20	1.24	99	1.7	10	-22/-30
	2	277	96	0.37	1.20	1.25	97	1.7	10	-22/-30
	1	120	62	0.52	1.39	2.24	99	1.7	10	-22/-30
F40T8	1	277	62	0.24	1.37	2.21	95	1.7	10	-22/-30

Safety and performance

UL Class P UL Type 1 Outdoor UL Type HL FCC – CLASS A Non-Consumer Product is compliant with material restriction requirements of RoHS

See page E-1 for warranty information.

UltraMax® Professional Series 347V High-Efficiency
T8 Instant Start Ballasts

74093 – GE232MAXP347-N

UltraMax® P-Series 347V High-Efficiency

2 or 1 – F32T8 347V "N" 0.87 BF UltraMax®P

- Energy-saving high-efficiency instant-start electronic ballast (>90%)
- Instant start ballast for long lamp starting cycles and low initial cost
- Anti-striation control for better light quality
- Cold temperature -22°F Minimum Starting Temperature
- Parallel lamp operation means system maintenance is easier to manage

General characteristics

Ballast Type	Electronic – High-Efficiency Instant Start
Starting Method	Instant start
Lamp Wiring	Parallel
Line Voltage Regulation(+/-)	10%
Ambient Temperature (MAX)	40°C (104°F)
Case Temperature (MAX)	70°C (158°F)
Ballast Factor	Normal
Power Factor Correction	Active
Sound Rating	A (20-24 decibels)
Enclosure Type	Metal
Additional Info	Anti-striation control, Auto-restart, Inherently Thermally Protected, UL Class P

Electrical characteristics

Supply Current Frequency	60 Hz

Order information

10 Pack	Pallet Pack	DIY Pack	IP Pack
74093			

Dimensions

Wiring diagram – LFL 1B – see example on Page 10-61	
Case dimensions – Ref Drawing -A – see Page 10-62	
Length (L)	9.5 in (241 mm)
Width (W)	1.3 in (33 mm)
Height (H)	1.18 in (30 mm)
Mounting dimensions	
Mount Length (M)	8.9 in (226 mm)
Mount Width (X or F)	0.87 in (22 mm)
Mount Slots (MS)	0.3 in (8 mm)
Weight	1.04lbs
Exit Type	Side
Remote Mounting Distance to Lamp (F32T8)	18 ft
Remote Mounting Wire Gauge	18 AWG
Lead lengths	
Black	25 in (635 mm)
White	25 in (635 mm)
Blue	31 in (787 mm)
Red	45 in (1143 mm)

Specifications by lamp and wattage

Lamp	# of Lamps	Line Volts (V)	System Watts (W)	Nom. Line Current (A)	System Ballast Factor	Ballast Efficacy Factor	Power Factor% (>=)	Crest Factor (<=)	THD% (<=)	Min. Starting Temp (°F/°C)
	2	347	53	0.15	0.87	1.65	99	1.7	10	-22/-30
F32T8	1	347	34	0.10	1.02	3.03	97	1.7	10	-22/-30
	2	347	50	0.15	0.86	1.72	99	1.7	10	60/16
F32T8/WM	1	347	32	0.09	1.02	3.20	97	1.7	10	60/16
	2	347	46	0.14	0.84	1.81	99	1.7	10	60/16
F28T8	1	347	30	0.09	1.01	3.38	97	1.7	10	60/16
F32T8/25W	2	347	42	0.12	0.84	2.00	99	1.7	10	60/16
	2	347	41	0.12	0.88	2.12	98	1.7	10	-22/-30
F25T8	1	347	26	0.08	1.03	3.89	90	1.7	25	-22/-30
F25T8/WM	2	347	35	0.11	0.88	2.51	98	1.7	10	60/16
	2	347	30	0.09	0.83	2.78	96	1.7	10	-22/-30
F17T8	1	347	20	0.07	0.98	5.00	80	1.7	50	-22/-30
F17T8/WM	2	347	25	0.08	0.83	3.32	97	1.7	10	60/16
	2	347	24	0.08	0.76	3.19	88	1.7	32	-22/-30
FE15T8	1	347	16	0.06	0.88	5.52	77	1.7	69	-22/-30
	2	347	44	0.13	0.89	2.03	98	1.7	10	-22/-30
F25T12	1	347	29	0.09	1.08	3.76	96	1.7	10	-22/-30

Safety and performance

UL Class P UL Type 1 Outdoor UL Type HL ICES-005 for EMI and RFI FCC – CLASS A Non-Consumer

ANSI - C82.11 - Cons 2002, ANSI - C62.41 - 1991 Product is compliant with material restriction requirements of RoHS

See page E-1 for warranty information.

UltraMax® Professional Series 347V High-Efficiency
T8 Instant Start Ballasts

67435 – GE232MAXP347-N+

UltraMax® P-Series 347V High-Efficiency

2 or 1 – F32T8 347V "N+" 1.0 BF UltraMax®P

- Energy-saving high-efficiency instant-start electronic ballast (>90%)
- Instant start ballast for long lamp starting cycles and low initial cost
- Anti-striation control for better light quality
- Cold temperature -22°F Minimum Starting Temperature
- Parallel lamp operation means system maintenance is easier to manage

General characteristics

Ballast Type	Electronic – High-Efficiency Instant Start
Starting Method	Instant start
Lamp Wiring	Parallel
Line Voltage Regulation(+/-)	10%
Ambient Temperature (MAX)	40°C (104°F)
Case Temperature (MAX)	70°C (158°F)
Ballast Factor	Normal-High
Power Factor Correction	Active
Sound Rating	A (20-24 decibels)
Enclosure Type	Metal
Additional Info	Anti-striation control, Auto-restart, Inherently Thermally Protected, UL Class P

Electrical characteristics

Supply Current Frequency	60 Hz

Order information

10 Pack	Pallet Pack	DIY Pack	IP Pack
67435			

Dimensions

Wiring diagram – LFL 1B – see example on Page 10-61	
Case dimensions – Ref Drawing -A – see Page 10-62	
Length (L)	9.5 in (241 mm)
Width (W)	1.3 in (33 mm)
Height (H)	1.18 in (30 mm)
Mounting dimensions	
Mount Length (M)	8.9 in (226 mm)
Mount Width (X or F)	0.87 in (22 mm)
Mount Slots (MS)	0.3 in (8 mm)
Weight	1.04lbs
Exit Type	Side
Remote Mounting Distance to Lamp (F32T8)	18 ft
Remote Mounting Wire Gauge	18 AWG
Lead lengths	
Black	25 in (635 mm)
White	25 in (635 mm)
Blue	31 in (787 mm)
Red	45 in (1143 mm)

Specifications by lamp and wattage

Lamp	# of Lamps	Line Volts (V)	System Watts (W)	Nom. Line Current (A)	System Ballast Factor	Ballast Efficacy Factor	Power Factor% (>=)	Crest Factor (<=)	THD% (<=)	Min. Starting Temp (°F/°C)
F32T8	2	347	61	0.17	1.00	1.64	99	1.7	10	-22/-30
	1	347								
F32T8/WM	2	347	57	0.17	.96	1.68	99	1.7	10	60/16
	1	347								
F28T8	2	347	53	0.15	.94	1.77	99	1.7	10	60/16
	1	347								
F25T8	2	347	48	0.14	.99	2.06	98	1.7	10	-22/-30
	1	347								
F17T8	2	347	34	0.11	.94	2.76	91	1.7	29	-22/-30
	1	347								
FE15T8	2	347	25	0.08	.85	3.40	88	1.7	46	-22/-30
	1	347								
F25T12	2	347	50	0.15	1.01	2.02	98	1.7	10	-22/-30
	1	347								

Safety and performance

c UL us LISTED; UL Class P; UL Type 1 Outdoor; UL Type HL; ICES-005 for EMI and RFI; FCC – CLASS A Non-Consumer

NEMA Premium; ANSI - C82.11 - Cons 2002, ANSI - C62.41 - 1991; Product is compliant with material restriction requirements of RoHS

See page E-1 for warranty information.

UltraMax® Professional Series 347V High-Efficiency
T8 Instant Start Ballasts

74094 – GE332MAXP347-N

UltraMax® P-Series 347V High-Efficiency

3 or 2 – F32T8 347V "N" 0.87 BF UltraMax®P

- Energy-saving high-efficiency instant-start electronic ballast (>90%)
- Instant start ballast for long lamp starting cycles and low initial cost
- Anti-striation control for better light quality
- Cold temperature -22°F Minimum Starting Temperature
- Parallel lamp operation means system maintenance is easier to manage

General characteristics

Ballast Type	Electronic – High-Efficiency Instant Start
Starting Method	Instant start
Lamp Wiring	Parallel
Line Voltage Regulation(+/-)	10%
Ambient Temperature (MAX)	40°C (104°F)
Case Temperature (MAX)	70°C (158°F)
Ballast Factor	Normal
Power Factor Correction	Active
Sound Rating	A (20-24 decibels)
Enclosure Type	Metal
Additional Info	Anti-striation control, Auto-restart, Inherently Thermally Protected, UL Class P

Electrical characteristics

Supply Current Frequency	60 Hz

Order information

10 Pack	Pallet Pack	DIY Pack	IP Pack
74094			

Dimensions

Wiring diagram – LFL 1C – see example on Page 10-61	
Case dimensions – Ref Drawing -A – see Page 10-62	
Length (L)	9.5 in (241 mm)
Width (W)	1.3 in (33 mm)
Height (H)	1.18 in (30 mm)
Mounting dimensions	
Mount Length (M)	8.9 in (226 mm)
Mount Width (X or F)	0.87 in (22 mm)
Mount Slots (MS)	0.3 in (8 mm)
Weight	1.15lbs
Exit Type	Side
Remote Mounting Distance to Lamp (F32T8)	18 ft
Remote Mounting Wire Gauge	18 AWG
Lead lengths	
Black	25 in (635 mm)
White	25 in (635 mm)
Blue	31 in (787 mm)
Red	45 in (1143 mm)

Specifications by lamp and wattage

Lamp	# of Lamps	Line Volts (V)	System Watts (W)	Nom. Line Current (A)	System Ballast Factor	Ballast Efficacy Factor	Power Factor% (>=)	Crest Factor (<=)	THD% (<=)	Min. Starting Temp (°F/°C)
	3	347	79	0.23	0.87	1.10	99	1.7	10	-22/-30
F32T8	2	347	60	0.17	0.98	1.63	99	1.7	10	-22/-30
	3	347	75	0.22	0.86	1.15	99	1.7	10	60/16
F32T8/WM	2	347	57	0.17	0.96	1.68	99	1.7	10	60/16
	3	347	70	0.20	0.84	1.20	99	1.7	10	60/16
F28T8	2	347	53	0.15	0.94	1.77	99	1.7	10	60/16
F32T8/25W	3	347	63	0.18	0.84	1.33	99	1.7	10	60/16
	3	347	62	0.18	0.88	1.42	99	1.7	10	-22/-30
F25T8	2	347	48	0.14	0.99	2.06	99	1.7	10	-22/-30
F25T8/WM	3	347	53	0.15	0.88	1.66	99	1.7	10	60/16
	3	347	43	0.13	0.84	1.95	98	1.7	10	-22/-30
F17T8	2	347	34	0.11	0.94	2.76	91	1.7	29	-22/-30
F17T8/WM	3	347	36	0.11	0.84	2.33	98	1.7	10	60/16
	3	347	33	0.10	0.76	2.30	97	1.7	13	-22/-30
FE15T8	2	347	25	0.08	0.85	3.40	89	1.7	46	-22/-30
	3	347	65	0.19	0.89	1.37	99	1.7	10	-22/-30
F25T12	2	347	50	0.15	1.01	2.02	99	1.7	10	-22/-30

Safety and performance

c UL us LISTED; UL Class P; UL Type 1 Outdoor; UL Type HL; ICES-005 for EMI and RFI; FCC – CLASS A Non-Consumer

NEMA Premium; ANSI - C82.11 - Cons 2002, ANSI - C62.41 - 1991; Product is compliant with material restriction requirements of RoHS

See page E-1 for warranty information.

UltraMax® Professional Series 347V High-Efficiency
T8 Instant Start Ballasts

74095 – GE432MAXP347-N

UltraMax® P-Series 347V High-Efficiency

4 or 3 – F32T8 347V "N" 0.87 BF UltraMax®P

- Energy-saving high-efficiency instant-start electronic ballast (>90%)
- Instant start ballast for long lamp starting cycles and low initial cost
- Anti-striation control for better light quality
- Cold temperature -22°F Minimum Starting Temperature
- Parallel lamp operation means system maintenance is easier to manage

General characteristics

Ballast Type	Electronic – High-Efficiency Instant Start
Starting Method	Instant start
Lamp Wiring	Parallel
Line Voltage Regulation(+/-)	10%
Ambient Temperature (MAX)	40°C (104°F)
Case Temperature (MAX)	70°C (158°F)
Ballast Factor	Normal
Power Factor Correction	Active
Sound Rating	A (20-24 decibels)
Enclosure Type	Metal
Additional Info	Anti-striation control, Auto-restart, Inherently Thermally Protected, UL Class P

Electrical characteristics

Supply Current Frequency	60 Hz

Order information

10 Pack	Pallet Pack	DIY Pack	IP Pack
74095			

Dimensions

Wiring diagram – LFL 1D – see example on Page 10-61	
Case dimensions – Ref Drawing -A – see Page 10-62	
Length (L)	9.5 in (241 mm)
Width (W)	1.3 in (33 mm)
Height (H)	1.18 in (30 mm)
Mounting dimensions	
Mount Length (M)	8.9 in (226 mm)
Mount Width (X or F)	0.87 in (22 mm)
Mount Slots (MS)	0.3 in (8 mm)
Weight	1.15lbs
Exit Type	Side
Remote Mounting Distance to Lamp (F32T8)	18 ft
Remote Mounting Wire Gauge	18 AWG
Lead lengths	
Black	25 in (635 mm)
White	25 in (635 mm)
Red & Blue	31 in (787 mm)
Yellow	47 in (1194 mm)

Specifications by lamp and wattage

Lamp	# of Lamps	Line Volts (V)	System Watts (W)	Nom. Line Current (A)	System Ballast Factor	Ballast Efficacy Factor	Power Factor% (>=)	Crest Factor (<=)	THD% (<=)	Min. Starting Temp (°F/°C)
	4	347	106	0.30	0.88	.83	99	1.7	10	-22/-30
F32T8	3	347	87	0.25	0.94	1.08	99	1.7	10	-22/-30
	4	347	100	0.29	0.86	.86	99	1.7	10	60/16
F32T8/WM	3	347	83	0.24	0.92	1.11	99	1.7	10	60/16
	4	347	93	0.27	0.84	.90	99	1.7	10	60/16
F28T8	3	347	77	0.22	0.90	1.17	99	1.7	10	60/16
F32T8/25W	4	347	84	0.24	0.84	1.00	99	1.7	10	60/16
	4	347	83	0.24	0.88	1.06	99	1.7	10	-22/-30
F25T8	3	347	69	0.20	0.95	1.38	99	1.7	10	-22/-30
F25T8/WM	4	347	71	0.21	0.88	1.24	99	1.7	10	60/16
	4	347	58	0.17	0.83	1.43	99	1.7	10	-22/-30
F17T8	3	347	48	0.14	0.90	1.88	98	1.7	12	-22/-30
F17T8/WM	4	347	50	0.15	0.83	1.66	99	1.7	10	60/16
	4	347	46	0.14	0.80	1.74	98	1.7	15	-22/-30
FE15T8	3	347	38	0.11	0.82	2.16	97	1.7	17	-22/-30
	4	347	88	0.25	0.88	1.00	99	1.7	10	-22/-30
F25T12	3	347	73	0.21	0.96	1.32	99	1.7	10	-22/-30

Safety and performance

c UL us LISTED; UL Class P; UL Type 1 Outdoor; UL Type HL; ICES-005 for EMI and RFI; FCC – CLASS A Non-Consumer

NEMA Premium; ANSI - C82.11 - Cons 2002, ANSI - C62.41 - 1991; Product is compliant with material restriction requirements of RoHS

See page E-1 for warranty information.

UltraMax® Professional Series 347V High-Efficiency
T8 Instant Start Ballasts

74096 – GE232MAXP347-L

UltraMax® P-Series 347V High-Efficiency

2 or 1 – F32T8 347V "L" 0.77 BF UltraMax®P

- Energy-saving high-efficiency instant-start electronic ballast (>90%)
- Instant start ballast for long lamp starting cycles and low initial cost
- Anti-striation control for better light quality
- Cold temperature -22°F Minimum Starting Temperature
- Parallel lamp operation means system maintenance is easier to manage

General characteristics

Ballast Type	Electronic – High-Efficiency Instant Start
Starting Method	Instant start
Lamp Wiring	Parallel
Line Voltage Regulation(+/-)	10%
Ambient Temperature (MAX)	40°C (104°F)
Case Temperature (MAX)	70°C (158°F)
Ballast Factor	Low
Power Factor Correction	Active
Sound Rating	A (20-24 decibels)
Enclosure Type	Metal
Additional Info	Anti-striation control, Auto-restart, Inherently Thermally Protected, UL Class P

Electrical characteristics

Supply Current Frequency	60 Hz

Order information

10 Pack	Pallet Pack	DIY Pack	IP Pack
74096			

Dimensions

Wiring diagram – LFL 1B – see example on Page 10-61	
Case dimensions – Ref Drawing -A – see Page 10-62	
Length (L)	9.5 in (241 mm)
Width (W)	1.3 in (33 mm)
Height (H)	1.18 in (30 mm)
Mounting dimensions	
Mount Length (M)	8.9 in (226 mm)
Mount Width (X or F)	0.87 in (22 mm)
Mount Slots (MS)	0.3 in (8 mm)
Weight	1.04lbs
Exit Type	Side
Remote Mounting Distance to Lamp (F32T8)	18 ft
Remote Mounting Wire Gauge	18 AWG
Lead lengths	
Black	25 in (635 mm)
White	25 in (635 mm)
Blue	31 in (787 mm)
Red	45 in (1143 mm)

Specifications by lamp and wattage

Lamp	# of Lamps	Line Volts (V)	System Watts (W)	Nom. Line Current (A)	System Ballast Factor	Ballast Efficacy Factor	Power Factor% (>=)	Crest Factor (<=)	THD% (<=)	Min. Starting Temp (°F/°C)
	2	347	48	0.14	0.77	1.60	99	1.7	10	-22/-30
F32T8	1	347	30	0.10	0.90	3.00	87	1.7	37	-22/-30
	2	347	45	0.13	0.77	1.71	99	1.7	10	60/16
F32T8/WM	1	347	29	0.10	0.89	3.07	86	1.7	40	60/16
	2	347	42	0.12	0.74	1.76	98	1.7	10	60/16
F28T8	1	347	27	0.09	0.87	3.22	83	1.7	41	60/16
F32T8/25W	2	347	37	0.12	0.74	2.00	98	1.7	10	60/16
	2	347	37	0.11	0.78	2.11	97	1.7	15	-22/-30
F25T8	1	347	24	0.09	0.91	3.79	77	1.7	50	-22/-30
F25T8/WM	2	347	31	0.10	0.78	2.52	97	1.7	15	60/16
	2	347	27	0.09	0.70	2.59	84	1.7	50	-22/-30
F17T8	1	347	18	0.08	0.86	4.78	68	1.7	53	-22/-30
F17T8/WM	2	347	23	0.08	0.74	3.22	84	1.7	50	60/16
	2	347	22	0.08	0.67	3.05	79	1.7	54	-22/-30
FE15T8	1	347	15	0.06	0.77	5.13	66	1.7	56	-22/-30
	2	347	39	0.11	0.77	1.97	98	1.7	10	-22/-30
F25T12	1	347	25	0.09	0.91	3.64	80	1.7	42	-22/-30

Safety and performance

UL Class P UL Type 1 Outdoor UL Type HL ICES-005 for EMI and RFI FCC – CLASS A Non-Consumer

ANSI - C82.11 - Cons 2002, ANSI - C62.41 - 1991 Product is compliant with material restriction requirements of RoHS

See page E-1 for warranty information.

UltraMax® Professional Series 347V High-Efficiency
T8 Instant Start Ballasts

74097 – GE332MAXP347-L

UltraMax® P-Series 347V High-Efficiency

3 or 2 – F32T8 347V "L" 0.77 BF UltraMax®P

- Energy-saving high-efficiency instant-start electronic ballast (>90%)
- Instant start ballast for long lamp starting cycles and low initial cost
- Anti-striation control for better light quality
- Cold temperature -22°F Minimum Starting Temperature
- Parallel lamp operation means system maintenance is easier to manage

General characteristics

Ballast Type	Electronic – High-Efficiency Instant Start
Starting Method	Instant start
Lamp Wiring	Parallel
Line Voltage Regulation(+/-)	10%
Ambient Temperature (MAX)	40°C (104°F)
Case Temperature (MAX)	70°C (158°F)
Ballast Factor	Low
Power Factor Correction	Active
Sound Rating	A (20-24 decibels)
Enclosure Type	Metal
Additional Info	Anti-striation control, Auto-restart, Inherently Thermally Protected, UL Class P

Electrical characteristics

Supply Current Frequency	60 Hz

Order information

10 Pack	Pallet Pack	DIY Pack	IP Pack
74097			

Dimensions

Wiring diagram – LFL 1C – see example on Page 10-61	
Case dimensions – Ref Drawing -A – see Page 10-62	
Length (L)	9.5 in (241 mm)
Width (W)	1.3 in (33 mm)
Height (H)	1.18 in (30 mm)
Mounting dimensions	
Mount Length (M)	8.9 in (226 mm)
Mount Width (X or F)	0.87 in (22 mm)
Mount Slots (MS)	0.3 in (8 mm)
Weight	1.15lbs
Exit Type	Side
Remote Mounting Distance to Lamp (F32T8)	18 ft
Remote Mounting Wire Gauge	18 AWG
Lead lengths	
Black	25 in (635 mm)
White	25 in (635 mm)
Blue	31 in (787 mm)
Red	45 in (1143 mm)

Specifications by lamp and wattage

Lamp	# of Lamps	Line Volts (V)	System Watts (W)	Nom. Line Current (A)	System Ballast Factor	Ballast Efficacy Factor	Power Factor% (>=)	Crest Factor (<=)	THD% (<=)	Min. Starting Temp (°F/°C)
	3	347	71	0.21	0.77	1.08	99	1.7	10	-22/-30
F32T8	2	347	55	0.16	0.86	1.56	99	1.7	10	-22/-30
	3	347	68	0.20	0.76	1.12	99	1.7	10	60/16
F32T8/WM	2	347	52	0.15	0.85	1.63	99	1.7	10	60/16
	3	347	63	0.18	0.74	1.17	99	1.7	10	60/16
F28T8	2	347	48	0.14	0.82	1.71	99	1.7	10	60/16
F32T8/25W	3	347	55	0.16	0.73	1.33	99	1.7	10	60/16
	3	347	56	0.16	0.78	1.39	99	1.7	10	-22/-30
F25T8	2	347	43	0.13	0.86	2.00	98	1.7	10	-22/-30
F25T8/WM	3	347	47	0.14	0.78	1.66	99	1.7	10	60/16
	3	347	40	0.12	0.74	1.85	98	1.7	10	-22/-30
F17T8	2	347	31	0.10	0.82	2.65	89	1.7	38	-22/-30
F17T8/WM	3	347	35	0.11	0.74	2.11	98	1.7	10	60/16
	3	347	30	0.09	0.67	2.23	96	1.7	13	-22/-30
FE15T8	2	347	23	0.07	0.74	3.22	93	1.7	19	-22/-30
	3	347	58	0.17	0.77	1.33	99	1.7	10	-22/-30
F25T12	2	347	46	0.13	0.87	1.89	99	1.7	10	-22/-30

Safety and performance

UL Class P UL Type 1 Outdoor UL Type HL ICES-005 for EMI and RFI FCC – CLASS A Non-Consumer

ANSI - C82.11 - Cons 2002, ANSI - C62.41 - 1991 Product is compliant with material restriction requirements of RoHS

See page E-1 for warranty information.

UltraMax® Professional Series 347V High-Efficiency
T8 Instant Start Ballasts

74098 – GE432MAXP347-L

UltraMax® P-Series 347V High-Efficiency

4 or 3 – F32T8 347V "L" 0.77 BF UltraMax®P

- Energy-saving high-efficiency instant-start electronic ballast (>90%)
- Instant start ballast for long lamp starting cycles and low initial cost
- Anti-striation control for better light quality
- Cold temperature -22°F Minimum Starting Temperature
- Parallel lamp operation means system maintenance is easier to manage

General characteristics

Ballast Type	Electronic – High-Efficiency Instant Start
Starting Method	Instant start
Lamp Wiring	Parallel
Line Voltage Regulation(+/-)	10%
Ambient Temperature (MAX)	40°C (104°F)
Case Temperature (MAX)	70°C (158°F)
Ballast Factor	Low
Power Factor Correction	Active
Sound Rating	A (20-24 decibels)
Enclosure Type	Metal
Additional Info	Anti-striation control, Auto-restart, Inherently Thermally Protected, UL Class P

Electrical characteristics

Supply Current Frequency	60 Hz

Order information

10 Pack	Pallet Pack	DIY Pack	IP Pack
74098			

Dimensions

Wiring diagram – LFL 1D – see example on Page 10-61	
Case dimensions – Ref Drawing -A – see Page 10-62	
Length (L)	9.5 in (241 mm)
Width (W)	1.3 in (33 mm)
Height (H)	1.18 in (30 mm)
Mounting dimensions	
Mount Length (M)	8.9 in (226 mm)
Mount Width (X or F)	0.87 in (22 mm)
Mount Slots (MS)	0.3 in (8 mm)
Weight	1.15lbs
Exit Type	Side
Remote Mounting Distance to Lamp (F32T8)	18 ft
Remote Mounting Wire Gauge	18 AWG
Lead lengths	
Black	25 in (635 mm)
White	25 in (635 mm)
Red & Blue	31 in (787 mm)
Yellow	47 in (1194 mm)

Specifications by lamp and wattage

Lamp	# of Lamps	Line Volts (V)	System Watts (W)	Nom. Line Current (A)	System Ballast Factor	Ballast Efficacy Factor	Power Factor% (>=)	Crest Factor (<=)	THD% (<=)	Min. Starting Temp (°F/°C)
	4	347	96	0.28	0.77	.80	99	1.7	10	-22/-30
F32T8	3	347	79	0.23	0.84	1.06	99	1.7	10	-22/-30
	4	347	90	0.26	0.76	.84	99	1.7	10	60/16
F32T8/WM	3	347	73	0.21	0.82	1.12	99	1.7	10	60/16
	4	347	84	0.24	0.74	.88	99	1.7	10	60/16
F28T8	3	347	69	0.20	0.81	1.17	99	1.7	10	60/16
F32T8/25W	4	347	74	0.21	0.74	1.00	99	1.7	10	60/16
	4	347	74	0.21	0.78	1.05	99	1.7	10	-22/-30
F25T8	3	347	61	0.18	0.85	1.39	98	1.7	10	-22/-30
F25T8/WM	4	347	63	0.18	0.78	1.24	99	1.7	10	60/16
	4	347	45	0.13	0.74	1.64	98	1.7	13	-22/-30
F17T8	3	347	36	0.11	0.80	2.22	92	1.7	33	-22/-30
F17T8/WM	4	347	38	0.12	0.74	1.95	98	1.7	13	60/16
	4	347	42	0.12	0.68	1.62	97	1.7	15	-22/-30
FE15T8	3	347	35	0.11	0.73	2.09	91	1.7	37	-22/-30
	4	347	78	0.23	0.77	.99	99	1.7	10	-22/-30
F25T12	3	347	65	0.19	0.84	1.29	99	1.7	10	-22/-30

Safety and performance

UL Class P UL Type 1 Outdoor UL Type HL ICES-005 for EMI and RFI FCC – CLASS A Non-Consumer

ANSI - C82.11 - Cons 2002, ANSI - C62.41 - 1991 Product is compliant with material restriction requirements of RoHS

See page E-1 for warranty information.

UltraMax® Professional Series 347V High-Efficiency
T8 Instant Start Ballasts

74109 – GE232MAXP347-H

UltraMax® P-Series 347V High-Efficiency

2 or 1 – F32T8 347V "H" 1.18 BF UltraMax®P

- Energy-saving high-efficiency instant-start electronic ballast (>90%)
- Instant start ballast for long lamp starting cycles and low initial cost
- Anti-striation control for better light quality
- Cold temperature -22°F Minimum Starting Temperature
- Parallel lamp operation means system maintenance is easier to manage

General characteristics

Ballast Type	Electronic – High-Efficiency Instant Start
Starting Method	Instant start
Lamp Wiring	Parallel
Line Voltage Regulation(+/-)	10%
Ambient Temperature (MAX)	40°C (104°F)
Case Temperature (MAX)	70°C (158°F)
Ballast Factor	High
Power Factor Correction	Active
Sound Rating	A (20-24 decibels)
Enclosure Type	Metal
Additional Info	Anti-striation control, Auto-restart, Inherently Thermally Protected, UL Class P

Electrical characteristics

Supply Current Frequency	60 Hz

Order information

10 Pack	Pallet Pack	DIY Pack	IP Pack
74109			

Dimensions

Wiring diagram – LFL 1B – see example on Page 10-61	
Case dimensions – Ref Drawing -A – see Page 10-62	
Length (L)	9.5 in (241 mm)
Width (W)	1.3 in (33 mm)
Height (H)	1.18 in (30 mm)
Mounting dimensions	
Mount Length (M)	8.9 in (226 mm)
Mount Width (X or F)	0.87 in (22 mm)
Mount Slots (MS)	0.3 in (8 mm)
Weight	1.04lbs
Exit Type	Side
Remote Mounting Distance to Lamp (F32T8)	18 ft
Remote Mounting Wire Gauge	18 AWG
Lead lengths	
Black	25 in (635 mm)
White	25 in (635 mm)
Blue	31 in (787 mm)
Red	45 in (1143 mm)

Specifications by lamp and wattage

Lamp	# of Lamps	Line Volts (V)	System Watts (W)	Nom. Line Current (A)	System Ballast Factor	Ballast Efficacy Factor	Power Factor% (>=)	Crest Factor (<=)	THD% (<=)	Min. Starting Temp (°F/°C)
	2	347	70	0.20	1.18	1.69	99	1.7	10	-22/-30
F32T8	1	347	44	0.13	1.32	3.00	99	1.7	10	-22/-30
	2	347	67	0.19	1.15	1.72	99	1.7	10	60/16
F32T8/WM	1	347	42	0.12	1.29	3.07	99	1.7	10	60/16
	2	347	63	0.12	1.30	2.06	99	1.7	17	60/16
F28T8	1	347	39	0.18	1.30	3.33	99	1.7	17	60/16
F32T8/25W	2	347	56	0.16	1.12	2.00	99	1.7	10	60/16
	2	347	55	0.16	1.16	2.11	99	1.7	10	-22/-30
F25T8	1	347	36	0.11	1.32	3.67	99	1.7	30	-22/-30
F25T8/WM	2	347	47	0.14	1.16	2.47	98	1.7	10	60/16
	2	347	37	0.11	1.10	2.97	97	1.7	12	-22/-30
F17T8	1	347	23	0.08	1.25	5.43	87	1.7	52	-22/-30
F17T8/WM	2	347	31	0.10	1.10	3.55	97	1.7	12	60/16
	2	347	30	0.09	1.00	3.33	94	1.7	30	-22/-30
FE15T8	1	347	19	0.07	1.15	6.05	82	1.7	55	-22/-30
F40T8	1	347	53	0.16	1.24	2.34	99	1.7	10	-22/-30
	2	347	61	0.18	1.23	2.02	99	1.7	10	-22/-30
F25T12	1	347	39	0.12	1.45	3.72	95	1.7	20	-22/-30

Safety and performance

UL Class P UL Type 1 Outdoor UL Type HL ICES-005 for EMI and RFI FCC – CLASS A Non-Consumer

ANSI - C82.11 - Cons 2002, ANSI - C62.41 - 1991 High Temperature Rated: Suitable for high temperature applications

70°C max case temp 5 yr warranty or 90°C max case temp 3 yr warranty Product is compliant with material restriction requirements of RoHS

See page E-1 for warranty information.

UltraMax® Professional Series 347V High-Efficiency
T8 Instant Start Ballasts

74111 – GE332MAXP347-H

UltraMax® P-Series 347V High-Efficiency

3 or 2 – F32T8 347V "H" 1.18 BF UltraMax®P

- Energy-saving high-efficiency instant-start electronic ballast (>90%)
- Instant start ballast for long lamp starting cycles and low initial cost
- Anti-striation control for better light quality
- Cold temperature -22°F Minimum Starting Temperature
- Parallel lamp operation means system maintenance is easier to manage

General characteristics

Ballast Type	Electronic – High-Efficiency Instant Start
Starting Method	Instant start
Lamp Wiring	Parallel
Line Voltage Regulation(+/-)	10%
Ambient Temperature (MAX)	40°C (104°F)
Case Temperature (MAX)	70°C (158°F)
Ballast Factor	High
Power Factor Correction	Active
Sound Rating	A (20-24 decibels)
Enclosure Type	Metal
Additional Info	Anti-striation control, Auto-restart, Inherently Thermally Protected, UL Class P

Electrical characteristics

Supply Current Frequency	60 Hz

Order information

10 Pack	Pallet Pack	DIY Pack	IP Pack
74111			

Dimensions

Wiring diagram – LFL 1C – see example on Page 10-61	
Case dimensions – Ref Drawing -A – see Page 10-62	
Length (L)	9.5 in (241 mm)
Width (W)	1.3 in (33 mm)
Height (H)	1.18 in (30 mm)
Mounting dimensions	
Mount Length (M)	8.9 in (226 mm)
Mount Width (X or F)	0.87 in (22 mm)
Mount Slots (MS)	0.3 in (8 mm)
Weight	1.15lbs
Exit Type	Side
Remote Mounting Distance to Lamp (F32T8)	18 ft
Remote Mounting Wire Gauge	18 AWG
Lead lengths	
Black	25 in (635 mm)
White	25 in (635 mm)
Blue	31 in (787 mm)
Red	45 in (1143 mm)

Specifications by lamp and wattage

Lamp	# of Lamps	Line Volts (V)	System Watts (W)	Nom. Line Current (A)	System Ballast Factor	Ballast Efficacy Factor	Power Factor% (>=)	Crest Factor (<=)	THD% (<=)	Min. Starting Temp (°F/°C)
	3	347	105	0.30	1.18	1.12	99	1.7	10	-22/-30
F32T8	2	347	79	0.23	1.29	1.63	99	1.7	10	-22/-30
	3	347	100	0.29	1.15	1.15	99	1.7	10	60/16
F32T8/WM	2	347	76	0.22	1.27	1.67	99	1.7	10	60/16
	3	347	93	0.27	1.13	1.22	99	1.7	17	60/16
F28T8	2	347	71	0.20	1.26	1.77	99	1.7	17	60/16
F32T8/25W	3	347	85	0.25	1.13	1.33	99	1.7	10	60/16
	3	347	82	0.24	1.17	1.43	99	1.7	10	-22/-30
F25T8	2	347	62	0.18	1.30	2.10	99	1.7	10	-22/-30
F25T8/WM	3	347	70	0.20	1.17	1.67	99	1.7	10	60/16
	3	347	60	0.17	1.10	1.83	99	1.7	10	-22/-30
F17T8	2	347	44	0.13	1.22	2.77	98	1.7	13	-22/-30
F17T8/WM	3	347	52	0.15	1.10	2.12	99	1.7	10	60/16
	3	347	46	0.14	1.00	2.17	98	1.7	12	-22/-30
FE15T8	2	347	36	0.11	1.11	3.08	91	1.7	33	-22/-30
F40T8	2	347	99	0.27	1.28	1.29	99	1.7	10	-22/-30
	3	347	89	0.26	1.24	1.39	99	1.7	10	-22/-30
F25T12	2	347	68	0.20	1.40	2.06	99	1.7	10	-22/-30

Safety and performance

UL Class P UL Type 1 Outdoor UL Type HL ICES-005 for EMI and RFI FCC – CLASS A Non-Consumer

ANSI - C82.11 - Cons 2002, ANSI - C62.41 - 1991 High Temperature Rated: Suitable for high temperature applications

70°C max case temp 5 yr warranty or 90°C max case temp 3 yr warranty Product is compliant with material restriction requirements of RoHS

See page E-1 for warranty information.

UltraMax® Professional Series 347V High-Efficiency
T8 Instant Start Ballasts

74113 – GE432MAXP347-H

UltraMax® P-Series 347V High-Efficiency

4 or 3 – F32T8 347V "H" 1.18 BF UltraMax®P

- Energy-saving high-efficiency instant-start electronic ballast (>90%)
- Instant start ballast for long lamp starting cycles and low initial cost
- Anti-striation control for better light quality
- Cold temperature -22°F Minimum Starting Temperature
- Parallel lamp operation means system maintenance is easier to manage

General characteristics

Ballast Type	Electronic – High-Efficiency Instant Start
Starting Method	Instant start
Lamp Wiring	Parallel
Line Voltage Regulation(+/-)	10%
Ambient Temperature (MAX)	40°C (104°F)
Case Temperature (MAX)	70°C (158°F)
Ballast Factor	High
Power Factor Correction	Active
Sound Rating	A (20-24 decibels)
Enclosure Type	Metal
Additional Info	Anti-striation control, Auto-restart, Inherently Thermally Protected, UL Class P

Electrical characteristics

Supply Current Frequency	60 Hz

Order information

10 Pack	Pallet Pack	DIY Pack	IP Pack
74113			

Dimensions

Wiring diagram – LFL 1D – see example on Page 10-61	
Case dimensions – Ref Drawing -A – see Page 10-62	
Length (L)	9.5 in (241 mm)
Width (W)	1.7 in (43 mm)
Height (H)	1.18 in (30 mm)
Mounting dimensions	
Mount Length (M)	8.9 in (226 mm)
Mount Width (X or F)	1.05 in (27 mm)
Mount Slots (MS)	0.3 in (8 mm)
Weight	1.5lbs
Exit Type	Side
Remote Mounting Distance to Lamp (F32T8)	18 ft
Remote Mounting Wire Gauge	18 AWG
Lead lengths	
Black	25 in (635 mm)
White	25 in (635 mm)
Red & Blue	31 in (787 mm)
Yellow	47 in (1194 mm)

Specifications by lamp and wattage

Lamp	# of Lamps	Line Volts (V)	System Watts (W)	Nom. Line Current (A)	System Ballast Factor	Ballast Efficacy Factor	Power Factor% (>=)	Crest Factor (<=)	THD% (<=)	Min. Starting Temp (°F/°C)
	4	347	137	0.39	1.18	.86	99	1.7	10	-22/-30
F32T8	3	347	114	0.33	1.25	1.10	99	1.7	10	-22/-30
	4	347	134	0.39	1.15	.86	99	1.7	10	60/16
F32T8/WM	3	347	111	0.32	1.23	1.11	99	1.7	10	60/16
	4	347	126	0.36	1.13	.90	99	1.7	17	60/16
F28T8	3	347	104	0.30	1.21	1.16	99	1.7	17	60/16
F32T8/25W	4	347	113	0.32	1.12	.99	99	1.7	10	60/16
	4	347	111	0.32	1.16	1.05	99	1.7	10	-22/-30
F25T8	3	347	92	0.27	1.26	1.37	99	1.7	10	-22/-30
F25T8/WM	4	347	96	0.28	1.16	1.21	99	1.7	10	60/16
	4	347	78	0.23	1.10	1.41	99	1.7	10	-22/-30
F17T8	3	347	66	0.19	1.18	1.79	98	1.7	11	-22/-30
F17T8/WM	4	347	68	0.19	1.10	1.62	99	1.7	10	60/16
	4	347	61	0.18	1.00	1.64	98	1.7	13	-22/-30
FE15T8	3	347	51	0.15	1.06	2.08	97	1.7	15	-22/-30
F40T8	3	347	147	0.41	1.33	.90	99	1.7	10	-22/-30
	4	347	121	0.35	1.23	1.02	99	1.7	10	-22/-30
F25T12	3	347	101	0.29	1.33	1.32	99	1.7	10	-22/-30

Safety and performance

c UL us LISTED — UL Class P — UL Type 1 Outdoor — UL Type HL — ICES-005 for EMI and RFI — FCC – CLASS A Non-Consumer

NEMA Premium — ANSI - C82.11 - Cons 2002, ANSI - C62.41 - 1991 — High Temperature Rated: Suitable for high temperature applications

70°C max case temp 5 yr warranty or 90°C max case temp 3 yr warranty — Product is compliant with material restriction requirements of RoHS

See page E-1 for warranty information.

UltraMax® Professional Series 480V High-Efficiency
T8 Instant Start Ballasts

62718 – GE232MAXP480-H

UltraMax® P-Series 480V High-Efficiency

2 or 1 – F32T8 480V "H" 1.18 BF UltraMax®P

- Energy-saving high-efficiency instant-start electronic ballast (>90%)
- 3-Stage 3G Transient Suppression –line to line transient capability up to 6KV
- Anti-striation control for better light quality
- UL 55°C Ambient Temperature rating
- Cold temperature -22°F Minimum Starting Temperature

General characteristics

Ballast Type	Electronic – High-Efficiency Instant Start
Starting Method	Instant start
Lamp Wiring	Parallel
Line Voltage Regulation(+/-)	10%
Ambient Temperature (MAX)	55°C (131°F)
Case Temperature (MAX)	90°C (194°F)
Ballast Factor	High
Power Factor Correction	Active
Sound Rating	A (20-24 decibels)
Enclosure Type	Metal
Additional Info	Anti-striation control, Auto-restart, Inherently Thermally Protected, UL Class P

Electrical characteristics

Supply Current Frequency	60 Hz

Order information

10 Pack	Pallet Pack	DIY Pack	IP Pack
62718			

Dimensions

Wiring diagram – LFL 1B – see example on Page 10-61	
Case dimensions – Ref Drawing -A – see Page 10-62	
Length (L)	11.75 in (299mm)
Width (W)	1.7 in (43 mm)
Height (H)	1.18 in (30 mm)
Mounting dimensions	
Mount Length (M)	11.1 in (283 mm)
Mount Width (X or F)	1.05 in (27 mm)
Mount Slots (MS)	0.3 in (8 mm)
Weight	2.15lbs
Exit Type	Side
Remote Mounting Distance to Lamp (F32T8)	18 ft
Remote Mounting Wire Gauge	18 AWG
Lead lengths	
Black	25 in (635 mm)
White	25 in (635 mm)
Blue	31 in (787 mm)
Red	45 in (1143 mm)

Specifications by lamp and wattage

Lamp	# of Lamps	Line Volts (V)	System Watts (W)	Nom. Line Current (A)	System Ballast Factor	Ballast Efficacy Factor	Power Factor% (>=)	Crest Factor (<=)	THD% (<=)	Min. Starting Temp (°F/°C)
	2	480	73	0.16	1.18	1.62	95	1.7	10	-22/-30
F32T8	1	480	45	0.10	1.39	3.09	88	1.7	15	-22/-30
	2	480	68	0.15	1.16	1.71	92	1.7	10	10/-12
F32T8/WM	1	480	42	0.10	1.37	3.26	88	1.7	15	10/-12
	2	480	64	0.14	1.13	1.77	92	1.7	10	10/-12
F28T8	1	480	41	0.09	1.35	3.29	88	1.7	15	10/-12
	2	480	59	0.13	1.11	1.88	92	1.7	10	10/-12
F32T8/25W	1	480	38	0.09	1.34	3.53	88	1.7	15	10/-12
	2	480	58	0.13	1.17	2.02	92	1.7	10	-22/-30
F25T8	1	480	38	0.09	1.38	3.63	88	1.7	15	-22/-30
	2	480	42	0.09	1.18	2.81	88	1.7	15	-22/-30
F17T8	1	480	28	0.07	1.39	4.96	80	1.7	20	-22/-30
	2	480	61	0.14	0.85	1.39	92	1.7	10	10/-12
F36T8	1	480	39	0.09	1.02	2.62	88	1.7	15	10/-12
F40T8	1	480	58	0.13	1.32	2.28	92	1.7	10	60/16

Safety and performance

UL Class P UL Type 1 Outdoor UL Type HL FCC – CLASS A Non-Consumer ANSI - C82.11 - Cons 2002, ANSI - C62.41 – 2005, Category A, 6KV, 12 Ohms

UL 55°C Ambient Temperature rating 70°C max case temp 5 yr warranty or 90°C max case temp 3 yr warranty Product is compliant with material restriction requirements of RoHS

See page E-1 for warranty information.

UltraMax® Professional Series 480V High-Efficiency
T8 Instant Start Ballasts

62719 – GE332MAXP480-H

UltraMax® P-Series 480V High-Efficiency

3 or 2– F32T8 480V "H" 1.18 BF UltraMax®P

- Energy-saving high-efficiency instant-start electronic ballast (>90%)
- 3-Stage 3G Transient Suppression –line to line transient capability up to 6KV
- Anti-striation control for better light quality
- UL 55°C Ambient Temperature rating
- Cold temperature -22°F Minimum Starting Temperature

General characteristics

Ballast Type	Electronic – High-Efficiency Instant Start
Starting Method	Instant start
Lamp Wiring	Parallel
Line Voltage Regulation(+/-)	10%
Ambient Temperature (MAX)	55°C (131°F)
Case Temperature (MAX)	90°C (194°F)
Ballast Factor	High
Power Factor Correction	Active
Sound Rating	A (20-24 decibels)
Enclosure Type	Metal
Additional Info	Anti-striation control, Auto-restart, Inherently Thermally Protected, UL Class P

Electrical characteristics

Supply Current Frequency	60 Hz

Order information

10 Pack	Pallet Pack	DIY Pack	IP Pack
62719			

Dimensions

Wiring diagram – LFL 1C – see example on Page 10-61	
Case dimensions – Ref Drawing -A – see Page 10-62	
Length (L)	11.75 in (299mm)
Width (W)	1.7 in (43 mm)
Height (H)	1.18 in (30 mm)
Mounting dimensions	
Mount Length (M)	11.1 in (283 mm)
Mount Width (X or F)	1.05 in (27 mm)
Mount Slots (MS)	0.3 in (8 mm)
Weight	2.15lbs
Exit Type	Side
Remote Mounting Distance to Lamp (F32T8)	18 ft
Remote Mounting Wire Gauge	18 AWG
Lead lengths	
Black	25 in (635 mm)
White	25 in (635 mm)
Blue	31 in (787 mm)
Red	45 in (1143 mm)

Specifications by lamp and wattage

Lamp	# of Lamps	Line Volts (V)	System Watts (W)	Nom. Line Current (A)	System Ballast Factor	Ballast Efficacy Factor	Power Factor% (>=)	Crest Factor (<=)	THD% (<=)	Min. Starting Temp (°F/°C)
F32T8	3	480	108	0.23	1.18	1.09	95	1.7	10	-22/-30
	2	480	82	0.18	1.31	1.60	95	1.7	10	-22/-30
F32T8/WM	3	480	100	0.22	1.16	1.16	95	1.7	10	10/-12
	2	480	76	0.16	1.28	1.68	95	1.7	10	10/-12
F28T8	3	480	94	0.20	1.13	1.20	95	1.7	10	10/-12
	2	480	72	0.16	1.26	1.75	95	1.7	10	10/-12
F32T8/25W	3	480	87	0.19	1.11	1.28	95	1.7	10	10/-12
	2	480	67	0.15	1.25	1.87	95	1.7	10	10/-12
F25T8	3	480	84	0.18	1.17	1.39	95	1.7	10	-22/-30
	2	480	65	0.14	1.29	1.98	95	1.7	10	-22/-30
F17T8	3	480	60	0.14	1.18	1.97	95	1.7	10	-22/-30
	2	480	47	0.10	1.30	2.77	90	1.7	15	-22/-30
F36T8	3	480	90	0.19	0.85	0.94	95	1.7	10	10/-12
	2	480	68	0.15	0.95	1.40	95	1.7	10	10/-12
F40T8	2	480	103	0.22	1.24	1.20	95	1.7	10	60/16

Safety and performance

c UL us LISTED; UL Class P; UL Type 1 Outdoor; UL Type HL; FCC – CLASS A Non-Consumer; ANSI - C82.11 - Cons 2002, ANSI - C62.41 – 2005, Category A, 6KV, 12 Ohms

UL 55°C Ambient Temperature rating; 70°C max case temp 5 yr warranty or 90°C max case temp 3 yr warranty; Product is compliant with material restriction requirements of RoHS

See page E-1 for warranty information.

UltraMax® Professional Series 480V High-Efficiency
T8 Instant Start Ballasts

62720 – GE432MAXP480-H

UltraMax® P-Series 480V High-Efficiency

4 or 3– F32T8 480V "H" 1.18 BF UltraMax®P

- Energy-saving high-efficiency instant-start electronic ballast (>90%)
- 3-Stage 3G Transient Suppression –line to line transient capability up to 6KV
- Anti-striation control for better light quality
- UL 55°C Ambient Temperature rating
- Cold temperature -22°F Minimum Starting Temperature

General characteristics

Ballast Type	Electronic – High-Efficiency Instant Start
Starting Method	Instant start
Lamp Wiring	Parallel
Line Voltage Regulation(+/-)	10%
Ambient Temperature (MAX)	55°C (131°F)
Case Temperature (MAX)	90°C (194°F)
Ballast Factor	High
Power Factor Correction	Active
Sound Rating	A (20-24 decibels)
Enclosure Type	Metal
Additional Info	Anti-striation control, Auto-restart, Inherently Thermally Protected, UL Class P

Electrical characteristics

Supply Current Frequency	60 Hz

Order information

10 Pack	Pallet Pack	DIY Pack	IP Pack
62720			

Dimensions

Wiring diagram – LFL 1D – see example on Page 10-61	
Case dimensions – Ref Drawing -A – see Page 10-62	
Length (L)	11.75 in (299mm)
Width (W)	1.7 in (43 mm)
Height (H)	1.18 in (30 mm)
Mounting dimensions	
Mount Length (M)	11.1 in (283 mm)
Mount Width (X or F)	1.05 in (27 mm)
Mount Slots (MS)	0.3 in (8 mm)
Weight	2.15lbs
Exit Type	Side
Remote Mounting Distance to Lamp (F32T8)	18 ft
Remote Mounting Wire Gauge	18 AWG
Lead lengths	
White and Black	25 in (635 mm)
Blue	31 in (787 mm)
Red	31 in (787 mm)
Yellow	47 in (1194 mm)

Specifications by lamp and wattage

Lamp	# of Lamps	Line Volts (V)	System Watts (W)	Nom. Line Current (A)	System Ballast Factor	Ballast Efficacy Factor	Power Factor% (>=)	Crest Factor (<=)	THD% (<=)	Min. Starting Temp (°F/°C)
	4	480	144	0.31	1.18	0.82	95	1.7	10	-22/-30
F32T8	3	480	118	0.25	1.29	1.09	95	1.7	10	-22/-30
	4	480	134	0.29	1.16	0.87	95	1.7	10	10/-12
F32T8/WM	3	480	110	0.24	1.26	1.15	95	1.7	10	10/-12
	4	480	125	0.27	1.13	0.90	95	1.7	10	10/-12
F28T8	3	480	103	0.22	1.23	1.19	95	1.7	10	10/-12
	4	480	115	0.26	1.11	0.97	95	1.7	10	10/-12
F32T8/25W	3	480	96	0.21	1.22	1.27	95	1.7	10	10/-12
	4	480	110	0.24	1.17	1.06	95	1.7	10	-22/-30
F25T8	3	480	91	0.21	1.26	1.38	95	1.7	10	-22/-30
	4	480	79	0.17	1.18	1.49	95	1.7	10	-22/-30
F17T8	3	480	66	0.14	1.27	1.92	95	1.7	10	-22/-30
	4	480	119	0.26	0.85	0.71	95	1.7	10	10/-12
F36T8	3	480	98	0.21	0.93	0.95	95	1.7	10	10/-12
F40T8	3	480	148	0.32	1.21	0.82	95	1.7	10	60/16

Safety and performance

UL Class P UL Type 1 Outdoor UL Type HL FCC – CLASS A Non-Consumer ANSI - C82.11 - Cons 2002, ANSI - C62.41 – 2005, Category A, 6KV, 12 Ohms

UL 55°C Ambient Temperature rating 70°C max case temp 5 yr warranty or 90°C max case temp 3 yr warranty Product is compliant with material restriction requirements of RoHS

See page E-1 for warranty information.

UltraMax® General Series T8 Multi-Voltage 120–277V
T8 Instant Start Ballasts For F17 (2 ft), F25 (3 ft), F32 (4 ft), F40 (5 ft) Lamps

72269 – GE132MAX-G-N (Replaces GE-132-MV-N)

UltraMax® G-Series T8 Multivolt 120V-277V

1 – F32T8 120 to 277 "N" .87 BF Multivolt UltraMax®G

- High-performance electronic ballast for all general fluorescent applications
- Instant start electronic ballast for long lamp starting cycles and low initial cost
- Multi-voltage technology handles voltage from 120 to 277V
- Parallel lamp operation means system maintenance is easier to manage
- Anti-striation control for better light quality
- Cold temperature -22°F Minimum Starting Temperature

General characteristics

Ballast Type	Electronic –Multivolt Instant Start
Starting Method	Instant start
Lamp Wiring	
Line Voltage Regulation(+/-)	10%
Ambient Temperature (MAX)	40°C (104°F)
Case Temperature (MAX)	70°C (158°F)
Ballast Factor	Normal
Power Factor Correction	Active
Sound Rating	A (20-24 decibels)
Enclosure Type	Metal
Additional Info	Anti-striation control, Auto-restart, Inherently Thermally Protected, UL Class P

Electrical characteristics

Supply Current Frequency	50 Hz/60 Hz

Order information

10 Pack	Pallet Pack	DIY Pack	IP Pack
72269	72270		

Dimensions

Wiring diagram – LFL 1A – see example on Page 10-61	
Case dimensions – Ref Drawing -A – see Page 10-62	
Length (L)	9.5 in (241 mm)
Width (W)	1.3 in (33 mm)
Height (H)	1.0 in (25.4 mm)
Mounting dimensions	
Mount Length (M)	8.9 in (226 mm)
Mount Width (X or F)	0.87 in (22 mm)
Mount Slots (MS)	0.3 in (8 mm)
Weight	0.6lbs
Exit Type	Side
Remote Mounting Distance to Lamp (F32T8)	18 ft
Remote Mounting Wire Gauge	18 AWG
Lead lengths	
Black	25 in (635 mm)
White	25 in (635 mm)
Blue	31 in (787 mm)
Red	37 in (940 mm)

Specifications by lamp and wattage

Lamp	# of Lamps	Line Volts (V)	System Watts (W)	Nom. Line Current (A)	System Ballast Factor	Ballast Efficacy Factor	Power Factor% (>=)	Crest Factor (<=)	THD% (<=)	Min. Starting Temp (°F/°C)
	1	120	28	0.24	.88	3.14	99	1.5	10	-22/-30
F32T8	1	277	28	0.11	.88	3.14	98	1.5	10	-22/-30
	1	120	27	0.23	.87	3.22	99	1.5	10	-22/-30
F32T8/WM	1	277	27	0.10	.87	3.22	98	1.5	10	-22/-30
	1	120	25	0.22	.89	3.56	99	1.5	10	-22/-30
F28T8	1	277	25	0.10	.89	3.56	98	1.5	10	-22/-30
	1	120	24	0.19	.88	3.67	99	1.5	10	-22/-30
F32T8/25W	1	277	23	0.09	.88	3.83	94	1.5	10	-22/-30
	1	120	23	0.19	.94	4.09	99	1.5	10	-22/-30
F25T8	1	277	24	0.09	.94	3.92	94	1.5	10	-22/-30
	1	120	17	0.14	.98	5.76	99	1.5	10	-22/-30
F17T8	1	277	17	0.07	.98	5.76	90	1.5	10	-22/-30
	1	120	14	0.12	.92	6.57	99	1.5	10	-22/-30
FE15T8	1	277	14	0.06	.92	6.57	88	1.5	10	-22/-30
	1	120	25	0.21	.94	3.76	99	1.5	10	0/-18
F25T12	1	277	25	0.10	.94	3.76	94	1.5	10	0/-18

Safety and performance

c UL us LISTED — UL Class P — UL Type 1 Outdoor — UL Type HL — FCC – CLASS A Non-Consumer

NEMA Premium — Product is compliant with material restriction requirements of RoHS

See page E-1 for warranty information.

UltraMax® General Series T8 Multi-Voltage 120–277V
T8 Instant Start Ballasts For F17 (2 ft), F25 (3 ft), F32 (4 ft), F40 (5 ft) Lamps

74803 – GE232MAX-G-H (Replaces GE232MV-H)

UltraMax® G-Series T8 Multivolt 120V-277V

2 or 1 – F32T8 120 to 277 "H" 1.18 BF Multivolt UltraMax®G

- High-performance electronic ballast for all general fluorescent applications
- Instant start electronic ballast for long lamp starting cycles and low initial cost
- Multi-voltage technology handles voltage from 120 to 277V
- Parallel lamp operation means system maintenance is easier to manage
- Anti-striation control for better light quality
- Cold temperature -22°F Minimum Starting Temperature

General characteristics

Ballast Type	Electronic –Multivolt Instant Start
Starting Method	Instant start
Lamp Wiring	Parallel
Line Voltage Regulation(+/-)	10%
Ambient Temperature (MAX)	40°C (104°F)
Case Temperature (MAX)	70°C (158°F)
Ballast Factor	High
Power Factor Correction	Active
Sound Rating	A (20-24 decibels)
Enclosure Type	Metal
Additional Info	Anti-striation control, Auto-restart, Inherently Thermally Protected, UL Class P

Electrical characteristics

Supply Current Frequency	50 Hz/60 Hz

Order information

10 Pack	Pallet Pack	DIY Pack	IP Pack
74803	74804		

Dimensions

Wiring diagram – LFL 1B – see example on Page 10-61	
Case dimensions – Ref Drawing -A – see Page 10-62	
Length (L)	9.5 in (241 mm)
Width (W)	1.3 in (33 mm)
Height (H)	1.18 in (30 mm)
Mounting dimensions	
Mount Length (M)	8.9 in (226 mm)
Mount Width (X or F)	0.87 in (22 mm)
Mount Slots (MS)	0.3 in (8 mm)
Weight	1.06lbs
Exit Type	Side
Remote Mounting Distance to Lamp (F32T8)	18 ft
Remote Mounting Wire Gauge	18 AWG
Lead lengths	
Black	25 in (635 mm)
White	25 in (635 mm)
Blue	31 in (787 mm)
Red	45 in (1143 mm)

Specifications by lamp and wattage

Lamp	# of Lamps	Line Volts (V)	System Watts (W)	Nom. Line Current (A)	System Ballast Factor	Ballast Efficacy Factor	Power Factor% (>=)	Crest Factor (<=)	THD% (<=)	Min. Starting Temp (°F/°C)
	2	120	77	0.65	1.18	1.53	99	1.7	10	-22/-30
	2	277	76	0.28	1.18	1.55	98	1.7	10	-22/-30
	1	120	48	0.44	1.34	2.79	99	1.7	10	-22/-30
F32T8	1	277	48	0.2	1.34	2.79	97	1.7	10	-22/-30
	2	120	70	0.63	1.13	1.61	99	1.7	10	60/16
	2	277	69	0.28	1.13	1.64	98	1.7	10	60/16
	1	120	45	0.42	1.30	2.89	99	1.7	10	60/16
F32T8/WM	1	277	45	0.19	1.30	2.89	96	1.7	10	60/16
	2	120	65	0.57	1.10	1.69	99	1.7	10	60/16
	2	277	64	0.26	1.10	1.72	98	1.7	10	60/16
	1	120	42	0.39	1.28	3.05	99	1.7	10	60/16
F28T8	1	277	42	0.18	1.28	3.05	96	1.7	10	60/16
	2	120	60	0.51	1.10	1.83	99	1.7	10	60/16
	2	277	60	0.22	1.10	1.83	98	1.7	15	60/16
	1	120	37	0.31	1.28	3.46	99	1.7	10	60/16
F32T8/25W	1	277	37	0.14	1.28	3.46	97	1.7	18	60/16
	2	120	57	0.51	1.16	2.04	99	1.7	10	-22/-30
	2	277	57	0.23	1.16	2.04	97	1.7	10	-22/-30
	1	120	38	0.35	1.32	3.47	99	1.7	10	-22/-30
F25T8	1	277	38	0.16	1.32	3.47	96	1.7	10	-22/-30
	2	120	41	0.36	1.15	2.80	99	1.7	10	-22/-30
	2	277	41	0.16	1.15	2.80	96	1.7	10	-22/-30
	1	120	27	0.24	1.31	4.85	99	1.7	10	-22/-30
F17T8	1	277	27	0.11	1.31	4.85	94	1.7	10	-22/-30
	1	120	57	0.53			99	1.7	10	0/-18
F40T8	1	277	57	0.23			97	1.7	10	0/-18

Safety and performance

UL Class P UL Type 1 Outdoor UL Type HL FCC – CLASS A Non-Consumer

Product is compliant with material restriction requirements of RoHS

See page E-1 for warranty information.

UltraMax® General Series T8 Multi-Voltage 120–277V
T8 Instant Start Ballasts For F17 (2 ft), F25 (3 ft), F32 (4 ft), F40 (5 ft) Lamps

72273 – GE232MAX-G-L (Replaces GE-232-MV-L)

UltraMax® G-Series T8 Multivolt 120V-277V

2 or 1 – F32T8 120 to 277 "L" .77 BF Multivolt UltraMax®G

- High-performance electronic ballast for all general fluorescent applications
- Instant start electronic ballast for long lamp starting cycles and low initial cost
- Multi-voltage technology handles voltage from 120 to 277V
- Parallel lamp operation means system maintenance is easier to manage
- Anti-striation control for better light quality
- Cold temperature -22°F Minimum Starting Temperature

General characteristics

Ballast Type	Electronic – High-Efficiency Multivolt Instant Start
Starting Method	Instant start
Lamp Wiring	Parallel
Line Voltage Regulation(+/-)	10%
Ambient Temperature (MAX)	40°C (104°F)
Case Temperature (MAX)	70°C (158°F)
Ballast Factor	Low
Power Factor Correction	Active
Sound Rating	A (20-24 decibels)
Enclosure Type	Metal
Additional Info	Anti-striation control, Auto-restart, Inherently Thermally Protected, UL Class P

Electrical characteristics

Supply Current Frequency	50 Hz/60 Hz

Order information

10 Pack	Pallet Pack	DIY Pack	IP Pack
72273			

Dimensions

Wiring diagram – LFL 1B – see example on Page 10-61	
Case dimensions – Ref Drawing -A – see Page 10-62	
Length (L)	9.5 in (241 mm)
Width (W)	1.3 in (33 mm)
Height (H)	1.0 in (25.4 mm)
Mounting dimensions	
Mount Length (M)	8.9 in (226 mm)
Mount Width (X or F)	0.87 in (22 mm)
Mount Slots (MS)	0.3 in (8 mm)
Weight	0.7lbs
Exit Type	Side
Remote Mounting Distance to Lamp (F32T8)	18 ft
Remote Mounting Wire Gauge	18 AWG
Lead lengths	
Black	25 in (635 mm)
White	25 in (635 mm)
Blue	31 in (787 mm)
Red	37 in (940 mm)

Specifications by lamp and wattage

Lamp	# of Lamps	Line Volts (V)	System Watts (W)	Nom. Line Current (A)	System Ballast Factor	Ballast Efficacy Factor	Power Factor% (>=)	Crest Factor (<=)	THD% (<=)	Min. Starting Temp (°F/°C)
	2	120	48	0.42	.78	1.63	99	1.5	10	-22/-30
	2	277	48	0.19	.78	1.63	98	1.5	10	-22/-30
	1	120	30	0.24	.96	3.20	99	1.5	10	-22/-30
F32T8	1	277	30	0.11	.96	3.20	95	1.5	10	-22/-30
	2	120	46	0.39	.77	1.67	99	1.5	10	-22/-30
	2	277	46	0.17	.77	1.67	98	1.5	10	-22/-30
	1	120	28	0.22	.77	2.75	99	1.5	10	-22/-30
F32T8/WM	1	277	28	0.11	.77	2.75	94	1.5	10	-22/-30
	2	120	43	0.36	.77	1.79	99	1.5	10	-22/-30
	2	277	42	0.16	.77	1.83	97	1.5	10	-22/-30
	1	120	26	0.21	.77	2.96	99	1.5	10	-22/-30
F28T8	1	277	26	0.10	.77	2.96	94	1.5	10	-22/-30
	2	120	39	0.33	.78	2.00	99	1.5	10	-22/-30
	2	277	39	0.15	.78	2.00	96	1.5	10	-22/-30
	1	120	22	0.18	.78	3.55	98	1.5	10	-22/-30
F32T8/25W	1	277	22	0.09	.78	3.55	93	1.5	10	-22/-30
	2	120	40	0.34	.78	1.95	99	1.5	10	-22/-30
	2	277	40	0.15	.78	1.95	96	1.5	10	-22/-30
	1	120	23	0.21	.96	4.17	99	1.5	10	-22/-30
F25T8	1	277	24	0.10	.96	4.00	93	1.5	15	-22/-30
	2	120	28	0.24	.79	2.82	99	1.5	10	-22/-30
	2	277	29	0.11	.79	2.72	94	1.5	10	-22/-30
	1	120	17	0.15	.98	5.76	99	1.5	10	-22/-30
F17T8	1	277	18	0.08	.98	5.44	90	1.5	10	-22/-30
	2	120	23	0.20	.78	3.39	99	1.5	10	-22/-30
	2	277	23	0.10	.78	3.39	91	1.5	15	-22/-30
	1	120	14	0.13	.78	5.57	99	1.5	10	-22/-30
FE15T8	1	277	15	0.07	.78	5.20	87	1.5	10	-22/-30
	2	120	42	0.35	.80	1.90	99	1.5	10	0/-18
	2	277	41	0.15	.80	1.95	97	1.5	10	0/-18
	1	120	24	0.21	.80	3.33	99	1.5	10	0/-18
F25T12	1	277	24	0.10	.80	3.33	95	1.5	10	0/-18

Safety and performance

UL LISTED · UL Class P · UL Type 1 Outdoor · UL Type HL · FCC – CLASS A Non-Consumer

NEMA Premium · Product is compliant with material restriction requirements of RoHS

See page E-1 for warranty information.

UltraMax® General Series T8 Multi-Voltage 120–277V
T8 Instant Start Ballasts For F17 (2 ft), F25 (3 ft), F32 (4 ft), F40 (5 ft) Lamps

72275 – GE232MAX-G-N (Replaces GE-232-MV-N)

UltraMax® G-Series T8 Multivolt 120V-277V

2 or 1 – F32T8 120 to 277 "N" .87 BF Multivolt UltraMax®G

- High-performance electronic ballast for all general fluorescent applications
- Instant start electronic ballast for long lamp starting cycles and low initial cost
- Multi-voltage technology handles voltage from 120 to 277V
- Parallel lamp operation means system maintenance is easier to manage
- Anti-striation control for better light quality
- Cold temperature -22°F Minimum Starting Temperature

General characteristics

Ballast Type	Electronic –Multivolt Instant Start
Starting Method	Instant start
Lamp Wiring	Parallel
Line Voltage Regulation(+/-)	10%
Ambient Temperature (MAX)	40°C (104°F)
Case Temperature (MAX)	70°C (158°F)
Ballast Factor	Normal
Power Factor Correction	Active
Sound Rating	A (20-24 decibels)
Enclosure Type	Metal
Additional Info	Anti-striation control, Auto-restart, Inherently Thermally Protected, UL Class P

Electrical characteristics

Supply Current Frequency	50 Hz/60 Hz

Order information

10 Pack	Pallet Pack	DIY Pack	IP Pack
72275	72276	93883	

Dimensions

Wiring diagram – LFL 1B – see example on Page 10-61	
Case dimensions – Ref Drawing -A – see Page 10-62	
Length (L)	9.5 in (241 mm)
Width (W)	1.3 in (33 mm)
Height (H)	1.18 in (30 mm)
Mounting dimensions	
Mount Length (M)	8.9 in (226 mm)
Mount Width (X or F)	0.87 in (22 mm)
Mount Slots (MS)	0.3 in (8 mm)
Weight	1.06lbs
Exit Type	Side
Remote Mounting Distance to Lamp (F32T8)	18 ft
Remote Mounting Wire Gauge	18 AWG
Lead lengths	
Black	25 in (635 mm)
White	25 in (635 mm)
Blue	31 in (787 mm)
Red	45 in (1143 mm)

Specifications by lamp and wattage

Lamp	# of Lamps	Line Volts (V)	System Watts (W)	Nom. Line Current (A)	System Ballast Factor	Ballast Efficacy Factor	Power Factor% (>=)	Crest Factor (<=)	THD% (<=)	Min. Starting Temp (°F/°C)
	2	120	57	0.48	.88	1.54	99	1.7	10	-22/-30
	2	277	55	0.2	.88	1.60	98	1.7	10	-22/-30
	1	120	35	0.3	1.08	3.09	99	1.7	10	-22/-30
F32T8	1	277	35	0.13	1.08	3.09	97	1.7	10	-22/-30
	2	120	53	0.44	.86	1.62	99	1.7	10	60/16
	2	277	51	0.19	.87	1.71	97	1.7	10	60/16
	1	120	33	0.28	1.05	3.18	99	1.7	10	60/16
F32T8/WM	1	277	33	0.12	1.05	3.18	96	1.7	10	60/16
	2	120	47	0.39	.83	1.77	99	1.7	10	60/16
	2	277	47	0.17	.83	1.77	97	1.7	10	60/16
	1	120	31	0.26	1.02	3.29	99	1.7	10	60/16
F28T8	1	277	31	0.11	.02	.06	95	1.7	10	60/16
	2	120	43	0.36	.83	1.93	99	1.7	10	60/16
	2	277	43	0.16	.83	1.93	97	1.7	10	60/16
	1	120	28	0.24	1.02	3.64	99	1.7	10	60/16
F32T8/25W	1	277	28	0.10	1.02	3.64	98	1.7	10	60/16
	2	120	44	0.37	.90	2.05	99	1.7	10	-22/-30
	2	277	44	0.16	.91	2.07	97	1.7	10	-22/-30
	1	120	28	0.23	1.08	3.86	99	1.7	10	-22/-30
F25T8	1	277	28	0.11	1.08	3.86	95	1.7	10	-22/-30
	2	120	31	0.26	.88	2.84	99	1.7	10	-22/-30
	2	277	31	0.12	.88	2.84	95	1.7	10	-22/-30
	1	120	20	0.17	1.05	5.25	99	1.7	10	-22/-30
F17T8	1	277	21	0.08	1.05	5.00	92	1.7	14	-22/-30
	1	120	44	0.37	1.08	2.45	99	1.7	10	0/-18
F40T8	1	277	43	0.16	1.08	2.51	96	1.7	10	0/-18

Safety and performance

UL Class P UL Type 1 Outdoor UL Type HL FCC – CLASS A Non-Consumer

Product is compliant with material restriction requirements of RoHS

See page E-1 for warranty information.

UltraMax® General Series T8 Multi-Voltage 120–277V
T8 Instant Start Ballasts For F17 (2 ft), F25 (3 ft), F32 (4 ft), F40 (5 ft) Lamps

74461 – GE332MAX-G-H (Replaces GE332MV-H)

UltraMax® G-Series T8 Multivolt 120V-277V

3 or 2 – F32T8 120 to 277 "H" 1.15 BF Multivolt UltraMax®G

- High-performance electronic ballast for all general fluorescent applications
- Instant start electronic ballast for long lamp starting cycles and low initial cost
- Multi-voltage technology handles voltage from 120 to 277V
- Parallel lamp operation means system maintenance is easier to manage
- Anti-striation control for better light quality
- Cold temperature -22°F Minimum Starting Temperature

General characteristics

Ballast Type	Electronic –Multivolt Instant Start
Starting Method	Instant start
Lamp Wiring	Parallel
Line Voltage Regulation(+/-)	10%
Ambient Temperature (MAX)	40°C (104°F)
Case Temperature (MAX)	70°C (158°F)
Ballast Factor	High
Power Factor Correction	Active
Sound Rating	A (20-24 decibels)
Enclosure Type	Metal
Additional Info	Anti-striation control, Auto-restart, Inherently Thermally Protected, UL Class P

Electrical characteristics

Supply Current Frequency	50 Hz/60 Hz

Order information

10 Pack	Pallet Pack	DIY Pack	IP Pack
74461	74462		

Dimensions

Wiring diagram – LFL 1C – see example on Page 10-61	
Case dimensions – Ref Drawing -A – see Page 10-62	
Length (L)	9.5 in (241 mm)
Width (W)	1.3 in (33 mm)
Height (H)	1.18 in (30 mm)
Mounting dimensions	
Mount Length (M)	8.9 in (226 mm)
Mount Width (X or F)	0.87 in (22 mm)
Mount Slots (MS)	0.3 in (8 mm)
Weight	1.40lbs
Exit Type	Side
Remote Mounting Distance to Lamp (F32T8)	18 ft
Remote Mounting Wire Gauge	18 AWG
Lead lengths	
Black	25 in (635 mm)
White	25 in (635 mm)
Blue	31 in (787 mm)
Red	45 in (1143 mm)

Specifications by lamp and wattage

Lamp	# of Lamps	Line Volts (V)	System Watts (W)	Nom. Line Current (A)	System Ballast Factor	Ballast Efficacy Factor	Power Factor% (>=)	Crest Factor (<=)	THD% (<=)	Min. Starting Temp (°F/°C)
	3	120	113	0.95	1.15	1.02	99	1.7	10	-22/-30
	3	277	110	0.41	1.15	1.05	98	1.7	10	-22/-30
	2	120	86	0.79	1.27	1.48	99	1.7	10	-22/-30
F32T8	2	277	85	0.34	1.27	1.49	97	1.7	10	-22/-30
	3	120	103	0.91	1.11	1.08	99	1.7	10	60/16
	3	277	101	0.39	1.11	1.10	98	1.7	10	60/16
	2	120	79	0.73	1.22	1.54	99	1.7	10	60/16
F32T8/WM	2	277	78	0.32	1.22	1.56	97	1.7	10	60/16
	3	120	94	0.84	1.10	1.17	99	1.7	10	60/16
	3	277	92	0.36	1.10	1.20	98	1.7	10	60/16
	2	120	72	0.67	1.20	1.67	99	1.7	10	60/16
F28T8	2	277	72	0.30	1.20	1.67	97	1.7	10	60/16
	3	120	89	0.75	1.07	1.20	99	1.7	10	60/16
	3	277	88	0.32	1.07	1.22	98	1.7	15	60/16
	2	120	68	0.57	1.20	1.76	99	1.7	10	60/16
F32T8/25W	2	277	69	0.26	1.20	1.74	97	1.7	18	60/16
	3	120	84	0.75	1.14	1.36	99	1.7	10	-22/-30
	3	277	83	0.33	1.14	1.37	97	1.7	10	-22/-30
	2	120	65	0.61	1.14	1.75	99	1.7	10	-22/-30
F25T8	2	277	65	0.26	1.14	1.75	97	1.7	10	-22/-30
	3	120	59	0.52	1.13	1.92	99	1.7	10	-22/-30
	3	277	59	0.24	1.13	1.92	96	1.7	10	-22/-30
	2	120	46	0.43	1.24	2.70	99	1.7	10	-22/-30
F17T8	2	277	46	0.20	1.24	2.70	95	1.7	10	-22/-30
	2	120	102	0.95			99	1.7	10	0/-18
F40T8	2	277	100	0.41			98	1.7	10	0/-18

Safety and performance

UL Class P · UL Type 1 Outdoor · UL Type HL · FCC – CLASS A Non-Consumer

Product is compliant with material restriction requirements of RoHS

See page E-1 for warranty information.

UltraMax® General Series T8 Multi-Voltage 120–277V
T8 Instant Start Ballasts For F17 (2 ft), F25 (3 ft), F32 (4 ft), F40 (5 ft) Lamps

74459 – GE332MAX-G-L (Replaces GE332MV-L)

UltraMax® G-Series T8 Multivolt 120V-277V

3 or 2 – F32T8 120 to 277 "L" .77 BF Multivolt UltraMax®G

- High-performance electronic ballast for all general fluorescent applications
- Instant start electronic ballast for long lamp starting cycles and low initial cost
- Multi-voltage technology handles voltage from 120 to 277V
- Parallel lamp operation means system maintenance is easier to manage
- Anti-striation control for better light quality
- Cold temperature -22°F Minimum Starting Temperature

General characteristics

Ballast Type	Electronic –Multivolt Instant Start
Starting Method	Instant start
Lamp Wiring	Parallel
Line Voltage Regulation(+/-)	10%
Ambient Temperature (MAX)	40°C (104°F)
Case Temperature (MAX)	70°C (158°F)
Ballast Factor	Low
Power Factor Correction	Active
Sound Rating	A (20-24 decibels)
Enclosure Type	Metal
Additional Info	Anti-striation control, Auto-restart, Inherently Thermally Protected, UL Class P

Electrical characteristics

Supply Current Frequency	50 Hz/60 Hz

Order information

10 Pack	Pallet Pack	DIY Pack	IP Pack
74459			

Dimensions

Wiring diagram – LFL 1C – see example on Page 10-61	
Case dimensions – Ref Drawing -A – see Page 10-62	
Length (L)	9.5 in (241 mm)
Width (W)	1.3 in (33 mm)
Height (H)	1.18 in (30 mm)
Mounting dimensions	
Mount Length (M)	8.9 in (226 mm)
Mount Width (X or F)	0.87 in (22 mm)
Mount Slots (MS)	0.3 in (8 mm)
Weight	1.40lbs
Exit Type	Side
Remote Mounting Distance to Lamp (F32T8)	18 ft
Remote Mounting Wire Gauge	18 AWG
Lead lengths	
Black	25 in (635 mm)
White	25 in (635 mm)
Blue	31 in (787 mm)
Red	45 in (1143 mm)

Specifications by lamp and wattage

Lamp	# of Lamps	Line Volts (V)	System Watts (W)	Nom. Line Current (A)	System Ballast Factor	Ballast Efficacy Factor	Power Factor% (>=)	Crest Factor (<=)	THD% (<=)	Min. Starting Temp (°F/°C)
	3	120	74	0.70	.78	1.05	99	1.7	10	-22/-30
	3	277	73	0.31	.78	1.07	98	1.7	10	-22/-30
	2	120	60	0.55	.87	1.45	99	1.7	10	-22/-30
F32T8	2	277	59	0.24	.87	1.47	97	1.7	10	-22/-30
	3	120	69	0.62	.75	1.09	99	1.7	10	60/16
	3	277	68	0.27	.75	1.10	98	1.7	10	60/16
	2	120	55	0.50	.83	1.51	99	1.7	10	60/16
F32T8/WM	2	277	55	0.22	.83	1.51	97	1.7	10	60/16
	3	120	63	0.57	.75	1.19	99	1.7	10	60/16
	3	277	63	0.25	.75	1.19	98	1.7	10	60/16
	2	120	50	0.46	.83	1.66	99	1.7	10	60/16
F28T8	2	277	50	0.20	.83	1.66	97	1.7	10	60/16
	3	120	59	0.50	.74	1.25	99	1.7	10	60/16
	3	277	59	0.22	.74	1.25	98	1.7	15	60/16
	2	120	46	0.39	.83	1.80	99	1.7	10	60/16
F32T8/25W	2	277	47	0.17	.83	1.77	97	1.7	18	60/16
	3	120	58	0.52	.77	1.33	99	1.7	10	-22/-30
	3	277	58	0.23	.77	1.33	97	1.7	10	-22/-30
	2	120	45	0.42	.86	1.91	99	1.7	10	-22/-30
F25T8	2	277	45	0.19	.86	1.91	96	1.7	10	-22/-30
	3	120	41	0.36	.77	1.88	99	1.7	10	-22/-30
	3	277	41	0.16	.77	1.88	96	1.7	10	-22/-30
	2	120	32	0.30	.85	2.66	99	1.7	10	-22/-30
F17T8	2	277	33	0.14	.85	2.58	95	1.7	10	-22/-30
	2	120	69	0.63			99	1.7	10	0/-18
F40T8	2	277	68	0.27			98	1.7	10	0/-18

Safety and performance

UL Class P UL Type 1 Outdoor UL Type HL FCC – CLASS A Non-Consumer

Product is compliant with material restriction requirements of RoHS

See page E-1 for warranty information.

UltraMax® General Series T8 Multi-Voltage 120–277V

T8 Instant Start Ballasts For F17 (2 ft), F25 (3 ft), F32 (4 ft), F40 (5 ft) Lamps

74456 – GE332MAX-G-N (Replaces GE332MV-N)

UltraMax® G-Series T8 Multivolt 120V-277V

3 or 2 – F32T8 120 to 277 "N" .87 BF Multivolt UltraMax®G

- High-performance electronic ballast for all general fluorescent applications
- Instant start electronic ballast for long lamp starting cycles and low initial cost
- Multi-voltage technology handles voltage from 120 to 277V
- Parallel lamp operation means system maintenance is easier to manage
- Anti-striation control for better light quality
- Cold temperature -22°F Minimum Starting Temperature

General characteristics

Ballast Type	Electronic –Multivolt Instant Start
Starting Method	Instant start
Lamp Wiring	Parallel
Line Voltage Regulation(+/-)	10%
Ambient Temperature (MAX)	40°C (104°F)
Case Temperature (MAX)	70°C (158°F)
Ballast Factor	Normal
Power Factor Correction	Active
Sound Rating	A (20-24 decibels)
Enclosure Type	Metal
Additional Info	Anti-striation control, Auto-restart, Inherently Thermally Protected, UL Class P

Electrical characteristics

Supply Current Frequency	50 Hz/60 Hz

Order information

10 Pack	Pallet Pack	DIY Pack	IP Pack
74456	74457	93869	

Dimensions

Wiring diagram – LFL 1C – see example on Page 10-61	
Case dimensions – Ref Drawing -A – see Page 10-62	
Length (L)	9.5 in (241 mm)
Width (W)	1.3 in (33 mm)
Height (H)	1.18 in (30 mm)
Mounting dimensions	
Mount Length (M)	8.9 in (226 mm)
Mount Width (X or F)	0.87 in (22 mm)
Mount Slots (MS)	0.3 in (8 mm)
Weight	1.40lbs
Exit Type	Side
Remote Mounting Distance to Lamp (F32T8)	18 ft
Remote Mounting Wire Gauge	18 AWG
Lead lengths	
Black	25 in (635 mm)
White	25 in (635 mm)
Blue	31 in (787 mm)
Red	45 in (1143 mm)

Specifications by lamp and wattage

Lamp	# of Lamps	Line Volts (V)	System Watts (W)	Nom. Line Current (A)	System Ballast Factor	Ballast Efficacy Factor	Power Factor% (>=)	Crest Factor (<=)	THD% (<=)	Min. Starting Temp (°F/°C)
	3	120	81	0.73	.87	1.07	99	1.7	10	-22/-30
	3	277	80	0.32	.87	1.09	98	1.7	10	-22/-30
	2	120	62	0.56	.96	1.55	99	1.7	10	-22/-30
F32T8	2	277	62	0.26	.96	1.55	98	1.7	10	-22/-30
	3	120	75	0.68	.83	1.11	99	1.7	10	60/16
	3	277	74	0.30	.83	1.12	98	1.7	10	60/16
	2	120	58	0.52	.92	1.59	99	1.7	10	60/16
F32T8/WM	2	277	57	0.23	.92	1.61	98	1.7	10	60/16
	3	120	67	0.60	.82	1.22	99	1.7	10	60/16
	3	277	66	0.26	.82	1.24	98	1.7	10	60/16
	2	120	52	0.46	.87	1.67	99	1.7	10	60/16
F28T8	2	277	51	0.29	.87	1.71	97	1.7	10	60/16
	3	120	66	0.56	.80	1.21	99	1.7	10	60/16
	3	277	65	0.24	.80	1.23	98	1.7	13	60/16
	2	120	51	0.43	.87	1.71	99	1.7	10	60/16
F32T8/25W	2	277	50	0.19	.87	1.74	97	1.7	18	60/16
	3	120	63	0.57	.86	1.37	99	1.7	10	-22/-30
	3	277	62	0.25	.86	1.39	98	1.7	10	-22/-30
	2	120	48	0.43	.94	1.96	99	1.7	10	-22/-30
F25T8	2	277	48	0.19	.94	1.96	97	1.7	10	-22/-30
	3	120	45	0.40	.86	1.91	99	1.7	10	-22/-30
	3	277	44	0.18	.86	1.95	97	1.7	10	-22/-30
	2	120	34	0.30	.92	2.71	99	1.7	10	-22/-30
F17T8	2	277	35	0.15	.92	2.63	96	1.7	10	-22/-30
	2	120	75	0.67			99	1.7	10	0/-18
F40T8	2	277	73	0.29			98	1.7	10	0/-18

Safety and performance

c UL us LISTED; UL Class P; UL Type 1 Outdoor; UL Type HL; FCC – CLASS A Non-Consumer

NEMA Premium; Product is compliant with material restriction requirements of RoHS

See page E-1 for warranty information.

UltraMax® General-Series T8 Multi-Voltage 120–277V
T8 Instant Start Ballasts For F17 (2 ft), F25 (3 ft), F32 (4 ft), F40 (5 ft) Lamps

67911 – GE432MAX-G-H (Replaces GE432MAXA-H)

UltraMax® G-Series T8 Multivolt 120V-277V

4 or 3 – F32T8 120 to 277 "H" 1.18 BF Multivolt UltraMax®G

- High-performance electronic ballast for all general fluorescent applications
- Instant start electronic ballast for long lamp starting cycles and low initial cost
- Multi-voltage technology handles voltage from 120 to 277V
- Parallel lamp operation means system maintenance is easier to manage
- Anti-striation control for better light quality
- Cold temperature -22°F Minimum Starting Temperature

General characteristics

Ballast Type	Electronic –Multivolt Instant Start
Starting Method	Instant start
Lamp Wiring	Parallel
Line Voltage Regulation(+/-)	10%
Ambient Temperature (MAX)	40°C (104°F)
Case Temperature (MAX)	70°C (158°F)
Ballast Factor	High
Power Factor Correction	Active
Sound Rating	A (20-24 decibels)
Enclosure Type	Metal
Additional Info	Anti-striation control, Auto-restart, Inherently Thermally Protected, UL Class P

Electrical characteristics

Supply Current Frequency	50 Hz/60 Hz

Order information

10 Pack	Pallet Pack	DIY Pack	IP Pack
67911			

Dimensions

Wiring diagram – LFL 1D – see example on Page 10-61	
Case dimensions – Ref Drawing -A – see Page 10-62	
Length (L)	9.5 in (241 mm)
Width (W)	1.7 in (43 mm)
Height (H)	1.18 in (30 mm)
Mounting dimensions	
Mount Length (M)	8.9 in (226 mm)
Mount Width (X or F)	1.05 in (27 mm)
Mount Slots (MS)	0.3 in (8 mm)
Weight	1.40lbs
Exit Type	Side
Remote Mounting Distance to Lamp (F32T8)	18 ft
Remote Mounting Wire Gauge	18 AWG
Lead lengths	
Black	25 in (635 mm)
White	25 in (635 mm)
Red & Blue	31 in (787 mm)
Yellow	47 in (1194 mm)

Specifications by lamp and wattage

Lamp	# of Lamps	Line Volts (V)	System Watts (W)	Nom. Line Current (A)	System Ballast Factor	Ballast Efficacy Factor	Power Factor% (>=)	Crest Factor (<=)	THD% (<=)	Min. Starting Temp (°F/°C)
	4	120	146	1.23	1.18	.81	99	1.7	10	-22/-30
	4	277	143	0.53	1.18	.83	98	1.7	10	-22/-30
	3	120	115	0.96	1.24	1.08	99	1.7	10	-22/-30
F32T8	3	277	113	0.42	1.24	1.10	98	1.7	10	-22/-30
	4	120	130	1.09	1.13	.87	99	1.7	10	60/16
	4	277	128	0.47	1.13	.88	98	1.7	10	60/16
	3	120	107	0.90	1.22	1.14	99	1.7	10	60/16
F32T8/WM	3	277	106	0.39	1.22	1.15	97	1.7	10	60/16
	4	120	123	1.03	1.10	.89	99	1.7	10	60/16
	4	277	121	0.44	1.11	.92	98	1.7	10	60/16
	3	120	101	0.85	1.20	1.19	99	1.7	10	60/16
F28T8	3	277	100	0.37	1.20	1.20	97	1.7	10	60/16
	4	120	123	1.03	1.11	.90	99	1.7	10	60/16
	4	277	121	0.44	1.11	.92	98	1.7	10	60/16
	3	120	101	0.85	1.22	1.21	99	1.7	10	60/16
F32T8/25W	3	277	100	0.37	1.22	1.22	97	1.7	10	60/16
	4	120	107	0.89	1.17	1.09	99	1.7	10	0/-18
	4	277	105	0.39	1.17	1.11	98	1.7	10	0/-18
	3	120	88	0.76	1.25	1.42	99	1.7	10	0/-18
F25T8	3	277	88	0.37	1.25	1.42	97	1.7	10	0/-18
	4	120	76	0.64	1.13	1.49	99	1.7	10	0/-18
	4	277	76	0.28	1.13	1.49	97	1.7	10	0/-18
	3	120	63	0.53	1.25	1.98	99	1.7	10	0/-18
F17T8	3	277	64	0.24	1.25	1.95	96	1.7	10	0/-18
	3	120	144	1.20			99	1.7	10	0/-18
F40T8	3	277	141	0.52			98	1.7	10	0/-18

Safety and performance

UL Class P UL Type 1 Outdoor UL Type HL FCC – CLASS A Non-Consumer

Product is compliant with material restriction requirements of RoHS

See page E-1 for warranty information.

UltraMax® General Series T8 Multi-Voltage 120–277V
T8 Instant Start Ballasts For F17 (2 ft), F25 (3 ft), F32 (4 ft), F40 (5 ft) Lamps

74466 – GE432MAX-G-L (Replaces GE432MV-L)

UltraMax® G-Series T8 Multivolt 120V-277V

4 or 3 – F32T8 120 to 277 "L" .77 BF Multivolt UltraMax®G

- High-performance electronic ballast for all general fluorescent applications
- Instant start electronic ballast for long lamp starting cycles and low initial cost
- Multi-voltage technology handles voltage from 120 to 277V
- Parallel lamp operation means system maintenance is easier to manage
- Anti-striation control for better light quality
- Cold temperature -22°F Minimum Starting Temperature

General characteristics

Ballast Type	Electronic –Multivolt Instant Start
Starting Method	Instant start
Lamp Wiring	Parallel
Line Voltage Regulation(+/-)	10%
Ambient Temperature (MAX)	40°C (104°F)
Case Temperature (MAX)	70°C (158°F)
Ballast Factor	Low
Power Factor Correction	Active
Sound Rating	A (20-24 decibels)
Enclosure Type	Metal
Additional Info	Anti-striation control, Auto-restart, Inherently Thermally Protected, UL Class P

Electrical characteristics

Supply Current Frequency	50 Hz/60 Hz

Order information

10 Pack	Pallet Pack	DIY Pack	IP Pack
74466			

Dimensions

Wiring diagram – LFL 1D – see example on Page 10-61	
Case dimensions – Ref Drawing -A – see Page 10-62	
Length (L)	9.5 in (241 mm)
Width (W)	1.3 in (33 mm)
Height (H)	1.18 in (30 mm)
Mounting dimensions	
Mount Length (M)	8.9 in (226 mm)
Mount Width (X or F)	0.87 in (22 mm)
Mount Slots (MS)	0.3 in (8 mm)
Weight	1.40lbs
Exit Type	Side
Remote Mounting Distance to Lamp (F32T8)	18 ft
Remote Mounting Wire Gauge	18 AWG
Lead lengths	
Black	25 in (635 mm)
White	25 in (635 mm)
Red & Blue	31 in (787 mm)
Yellow	47 in (1194 mm)

Specifications by lamp and wattage

Lamp	# of Lamps	Line Volts (V)	System Watts (W)	Nom. Line Current (A)	System Ballast Factor	Ballast Efficacy Factor	Power Factor% (>=)	Crest Factor (<=)	THD% (<=)	Min. Starting Temp (°F/°C)
	4	120	100	0.95	.80	.80	99	1.7	10	-22/-30
	4	277	98	0.41	.80	.82	98	1.7	10	-22/-30
	3	120	87	0.80	.87	1.00	99	1.7	10	-22/-30
F32T8	3	277	86	0.35	.87	1.01	97	1.7	10	-22/-30
	4	120	95	0.84	.76	.80	99	1.7	10	60/16
	4	277	93	0.36	.76	.82	98	1.7	10	60/16
	3	120	79	0.73	.83	1.05	99	1.7	10	60/16
F32T8/WM	3	277	78	0.32	.83	1.06	97	1.7	10	60/16
	4	120	86	0.77	.75	.87	99	1.7	10	60/16
	4	277	85	0.33	.70	.82	97	1.7	10	60/16
	3	120	73	0.67	.79	1.08	99	1.7	10	60/16
F28T8	3	277	72	0.29	.79	1.10	97	1.7	10	60/16
	4	120	77	0.65	.70	.91	99	1.7	10	60/16
	4	277	77	0.28	.73	.95	98	1.7	15	60/16
	3	120	65	0.55	.79	1.22	99	1.7	10	60/16
F32T8/25W	3	277	65	0.24	.79	1.22	97	1.7	18	60/16
	4	120	78	0.69	.80	1.03	99	1.7	10	-22/-30
	4	277	77	0.31	.80	1.04	97	1.7	10	-22/-30
	3	120	66	0.61	.86	1.30	99	1.7	10	-22/-30
F25T8	3	277	65	0.27	.86	1.32	97	1.7	10	-22/-30
	4	120	55	0.49	.79	1.44	99	1.7	10	-22/-30
	4	277	55	0.23	.79	1.44	96	1.7	10	-22/-30
	3	120	46	0.43	.85	1.85	99	1.7	10	-22/-30
F17T8	3	277	46	0.19	.85	1.85	95	1.7	10	-22/-30
	3	120	102	0.94			99	1.7	10	0/-18
F40T8	3	277	100	0.41			97	1.7	10	0/-18

Safety and performance

UL Class P UL Type 1 Outdoor UL Type HL FCC – CLASS A Non-Consumer

Product is compliant with material restriction requirements of RoHS

See page E-1 for warranty information.

UltraMax® General Series T8 Multi-Voltage 120–277V
T8 Instant Start Ballasts For F17 (2 ft), F25 (3 ft), F32 (4 ft), F40 (5 ft) Lamps

74463 – GE432MAX-G-N (Replaces GE432MV-N)

UltraMax® G-Series T8 Multivolt 120V-277V

4 or 3 – F32T8 120 to 277 "N" .87 BF Multivolt UltraMax®G

- High-performance electronic ballast for all general fluorescent applications
- Instant start electronic ballast for long lamp starting cycles and low initial cost
- Multi-voltage technology handles voltage from 120 to 277V
- Parallel lamp operation means system maintenance is easier to manage
- Anti-striation control for better light quality
- Cold temperature -22°F Minimum Starting Temperature

General characteristics

Ballast Type	Electronic –Multivolt Instant Start
Starting Method	Instant start
Lamp Wiring	Parallel
Line Voltage Regulation(+/-)	10%
Ambient Temperature (MAX)	40°C (104°F)
Case Temperature (MAX)	70°C (158°F)
Ballast Factor	Normal
Power Factor Correction	Active
Sound Rating	A (20-24 decibels)
Enclosure Type	Metal
Additional Info	Anti-striation control, Auto-restart, Inherently Thermally Protected, UL Class P

Electrical characteristics

Supply Current Frequency	50 Hz/60 Hz

Order information

10 Pack	Pallet Pack	DIY Pack	IP Pack
74463	74464	93868	

Dimensions

Wiring diagram – LFL 1D – see example on Page 10-61	
Case dimensions – Ref Drawing -A – see Page 10-62	
Length (L)	9.5 in (241 mm)
Width (W)	1.3 in (33 mm)
Height (H)	1.18 in (30 mm)
Mounting dimensions	
Mount Length (M)	8.9 in (226 mm)
Mount Width (X or F)	0.87 in (22 mm)
Mount Slots (MS)	0.3 in (8 mm)
Weight	1.40lbs
Exit Type	Side
Remote Mounting Distance to Lamp (F32T8)	18 ft
Remote Mounting Wire Gauge	18 AWG
Lead lengths	
Black	25 in (635 mm)
White	25 in (635 mm)
Red & Blue	31 in (787 mm)
Yellow	47 in (1194 mm)

Specifications by lamp and wattage

Lamp	# of Lamps	Line Volts (V)	System Watts (W)	Nom. Line Current (A)	System Ballast Factor	Ballast Efficacy Factor	Power Factor% (>=)	Crest Factor (<=)	THD% (<=)	Min. Starting Temp (°F/°C)
	4	120	113	0.99	.88	.78	99	1.7	10	-22/-30
	4	277	110	0.43	.88	.80	98	1.7	10	-22/-30
	3	120	93	0.83	.93	1.00	99	1.7	10	-22/-30
F32T8	3	277	92	0.36	.93	1.01	98	1.7	10	-22/-30
	4	120	103	0.90	.83	.81	99	1.7	10	60/16
	4	277	103	0.40	.83	.81	98	1.7	10	60/16
	3	120	87	0.77	.91	1.05	99	1.7	10	60/16
F32T8/WM	3	277	86	0.33	.91	1.06	98	1.7	10	60/16
	4	120	93	0.83	.82	.88	99	1.7	10	60/16
	4	277	92	0.36	.82	.89	98	1.7	10	60/16
	3	120	77	0.68	.85	1.10	99	1.7	10	60/16
F28T8	3	277	77	0.30	.85	1.10	98	1.7	10	60/16
	4	120	88	0.74	.80	.91	99	1.7	10	60/16
	4	277	87	0.32	.80	.92	98	1.7	15	60/16
	3	120	73	0.61	.85	1.16	99	1.7	10	60/16
F32T8/25W	3	277	73	0.27	.85	1.16	97	1.7	16	60/16
	4	120	88	0.77	.87	.99	99	1.7	10	-22/-30
	4	277	86	0.34	.87	1.01	98	1.7	10	-22/-30
	3	120	73	0.64	.93	1.27	99	1.7	10	-22/-30
F25T8	3	277	72	0.28	.93	1.29	98	1.7	10	-22/-30
	4	120	60	0.53	.87	1.45	99	1.7	10	-22/-30
	4	277	60	0.23	.87	1.45	97	1.7	10	-22/-30
	3	120	51	0.45	.91	1.78	99	1.7	10	-22/-30
F17T8	3	277	51	0.20	.91	1.78	97	1.7	10	-22/-30
	3	120	112	0.99			99	1.7	10	0/-18
F40T8	3	277	110	0.43			98	1.7	10	0/-18

Safety and performance

UL Class P UL Type 1 Outdoor UL Type HL FCC – CLASS A Non-Consumer

Product is compliant with material restriction requirements of RoHS

See page E-1 for warranty information.

UltraMax® General Series T8 Multi-Voltage 120–277V
T8 Instant Start Ballasts For 46-59W 4ft-8ft Slimline Lamps

72271 – GE159MAX-G-N (Replaces GE-159-MV-N)

UltraMax® G-Series T8 Multivolt 120V-277V

1 – F96T8 120 to 277 "N" 0.87 BF UltraMax®G

- High-performance electronic ballast for all general fluorescent applications
- Instant start electronic ballast for long lamp starting cycles and low initial cost
- Multi-voltage technology handles voltage from 120 to 277V
- Cold temperature 0°F Minimum Starting Temperature

General characteristics

Ballast Type	Electronic –Multivolt Instant Start
Starting Method	Instant start
Lamp Wiring	
Line Voltage Regulation(+/-)	10%
Ambient Temperature (MAX)	40°C (104°F)
Case Temperature (MAX)	70°C (158°F)
Ballast Factor	Normal
Power Factor Correction	Active
Sound Rating	A (20-24 decibels)
Enclosure Type	Metal
Additional Info	Auto-restart, Inherently Thermally Protected, UL Class P

Electrical characteristics

Supply Current Frequency	50 Hz/60 Hz

Order information

10 Pack	Pallet Pack	DIY Pack	IP Pack
72271	72272		

Dimensions

Wiring diagram – LFL 1A – see example on Page 10-61	
Case dimensions – Ref Drawing -A – see Page 10-62	
Length (L)	9.5 in (241 mm)
Width (W)	1.3 in (33 mm)
Height (H)	1.18 in (30 mm)
Mounting dimensions	
Mount Length (M)	8.9 in (226 mm)
Mount Width (X or F)	0.87 in (22 mm)
Mount Slots (MS)	0.3 in (8 mm)
Weight	1.06lbs
Exit Type	Side
Remote Mounting Distance to Lamp (F32T8)	18 ft
Remote Mounting Wire Gauge	18 AWG
Lead lengths	
Black	22 in (559 mm)
White	22 in (559 mm)
Blue	46 in (1168 mm)
Red	78 in (1981 mm)

Specifications by lamp and wattage

Lamp	# of Lamps	Line Volts (V)	System Watts (W)	Nom. Line Current (A)	System Ballast Factor	Ballast Efficacy Factor	Power Factor% (>=)	Crest Factor (<=)	THD% (<=)	Min. Starting Temp (°F/°C)
F96T8	1	120	60	0.55	.89	1.48	99	1.7	10	0/-18
	1	277	59	0.22	.89	1.51	96	1.7	18	0/-18
F96T8/WM	1	120	56	0.51	.85	1.52	99	1.7	10	50/10
	1	277	54	0.22	.85	1.57	96	1.7	18	50/10
F96T8/WMP	1	120	52	0.43	.80	1.54	99	1.7	10	50/10
	1	277	51	0.19	.80	1.57	96	1.7	18	50/10

Safety and performance

UL Class P UL Type 1 Outdoor UL Type HL FCC – CLASS A Non-Consumer Product is compliant with material restriction requirements of RoHS

See page E-1 for warranty information.

UltraMax® General Series T8 Multi-Voltage 120–277V
T8 Instant Start Ballasts For 46-59W 4ft-8ft Slimline Lamps

74469 – GE259MAX-G-N (Replaces GE259MV-N)

UltraMax® G-Series T8 Multivolt 120V-277V

2 or 1 – F96T8 120 to 277 "N" 0.87 BF UltraMax®G

- High-performance electronic ballast for all general fluorescent applications
- Instant start electronic ballast for long lamp starting cycles and low initial cost
- Multi-voltage technology handles voltage from 120 to 277V
- Parallel lamp operation means system maintenance is easier to manage
- Cold temperature 0°F Minimum Starting Temperature

General characteristics

Ballast Type	Electronic –Multivolt Instant Start
Starting Method	Instant start
Lamp Wiring	Parallel
Line Voltage Regulation(+/-)	10%
Ambient Temperature (MAX)	40°C (104°F)
Case Temperature (MAX)	70°C (158°F)
Ballast Factor	Normal
Power Factor Correction	Active
Sound Rating	A (20-24 decibels)
Enclosure Type	Metal
Additional Info	Auto-restart, Inherently Thermally Protected, UL Class P

Electrical characteristics

Supply Current Frequency	50 Hz/60 Hz

Order information

10 Pack	Pallet Pack	DIY Pack	IP Pack
74469	74470	93879	

Dimensions

Wiring diagram – LFL 1B – see example on Page 10-61	
Case dimensions – Ref Drawing -A – see Page 10-62	
Length (L)	9.5 in (241 mm)
Width (W)	1.3 in (33 mm)
Height (H)	1.18 in (30 mm)
Mounting dimensions	
Mount Length (M)	8.9 in (226 mm)
Mount Width (X or F)	0.87 in (22 mm)
Mount Slots (MS)	0.3 in (8 mm)
Weight	1.40lbs
Exit Type	Side
Remote Mounting Distance to Lamp (F32T8)	18 ft
Remote Mounting Wire Gauge	18 AWG
Lead lengths	
Black	22 in (559 mm)
White	22 in (559 mm)
Blue	46 in (1168 mm)
Red	78 in (1981 mm)

Specifications by lamp and wattage

Lamp	# of Lamps	Line Volts (V)	System Watts (W)	Nom. Line Current (A)	System Ballast Factor	Ballast Efficacy Factor	Power Factor% (>=)	Crest Factor (<=)	THD% (<=)	Min. Starting Temp (°F/°C)
	2	120	113	1.01	.88	.78	99	1.7	10	0/-18
	2	277	110	0.4	.88	.80	98	1.7	10	0/-18
	1	120	72	0.66	.88	1.22	99	1.7	10	0/-18
F96T8	1	277	72	0.29	.88	1.22	97	1.7	10	0/-18
	2	120	104	0.93	.86	.83	99	1.7	10	60/16
	2	277	101	0.42	.86	.85	98	1.7	10	60/16
	1	120	67	0.63	1.02	1.52	99	1.7	10	60/16
F96T8/WM	1	277	66	0.28	1.02	1.55	97	1.7	10	60/16

Safety and performance

c UL us LISTED — UL Class P — UL Type 1 Outdoor — UL Type HL — FCC – CLASS A Non-Consumer — Product is compliant with material restriction requirements of RoHS

See page E-1 for warranty information.

UltraMax® General Series 347V Instant Start High Performance
T8 Instant Start Ballasts

74101 – GE132MAX-G-347 (Replaces GE132-N-347)

UltraMax® G-Series 347V Instant Start High-Efficiency

1 – F32T8 347V "N" 0.87 BF UltraMax®G

- High-performance electronic ballast for all general fluorescent applications
- Instant start electronic ballast for long lamp starting cycles and low initial cost
- Light-weight, Slim Profile Mini Can Housing
- Parallel lamp operation means system maintenance is easier to manage
- Cold temperature 0°F Minimum Starting Temperature

General characteristics

Ballast Type	Electronic – High-Efficiency Instant Start
Starting Method	Instant start
Lamp Wiring	
Line Voltage Regulation(+/-)	10%
Ambient Temperature (MAX)	40°C (104°F)
Case Temperature (MAX)	70°C (158°F)
Ballast Factor	Normal
Power Factor Correction	Active
Sound Rating	A (20-24 decibels)
Enclosure Type	Metal
Additional Info	Auto-restart, Inherently Thermally Protected, UL Class P

Electrical characteristics

Supply Current Frequency	60 Hz

Order information

10 Pack	Pallet Pack	DIY Pack	IP Pack
74101			

Dimensions

Wiring diagram – LFL 1A – see example on Page 10-61	
Case dimensions – Ref Drawing -A – see Page 10-62	
Length (L)	9.5 in (241 mm)
Width (W)	1.3 in (33 mm)
Height (H)	1.18 in (30 mm)
Mounting dimensions	
Mount Length (M)	8.9 in (226 mm)
Mount Width (X or F)	0.87 in (22 mm)
Mount Slots (MS)	0.3 in (8 mm)
Weight	1.04lbs
Exit Type	Side
Remote Mounting Distance to Lamp (F32T8)	18 ft
Remote Mounting Wire Gauge	18 AWG
Lead lengths	
Black	25 in (635 mm)
White	25 in (635 mm)
Blue	31 in (787 mm)
Red	45 in (1143 mm)

Specifications by lamp and wattage

Lamp	# of Lamps	Line Volts (V)	System Watts (W)	Nom. Line Current (A)	System Ballast Factor	Ballast Efficacy Factor	Power Factor% (>=)	Crest Factor (<=)	THD% (<=)	Min. Starting Temp (°F/°C)
F32T8	1	347	30	0.09	.87	2.91	97	1.7	10	0/-18
F32T8/WM	1	347	28	0.08	.86	3.10	96	1.7	10	0/-18
F28T8	1	347	26	0.08	.84	3.26	96	1.7	10	0/-18
F32T8/25W	1	347	24	0.07	.84	3.50	96	1.7	10	0/-18
F25T8	1	347	23	0.07	.88	3.83	95	1.7	10	0/-18
F25T8/WM	1	347	20	0.07	.88	4.40	95	1.7	10	0/-18
F17T8	1	347	17	0.06	.81	4.76	87	1.7	17	0/-18
FE15T8	1	347	14	0.05	.75	5.36	81	1.7	20	0/-18
F25T12	1	347	24	0.07	.88	3.67	95	1.7	10	0/-18

Safety and performance

c UL us LISTED UL Class P UL Type 1 Outdoor UL Type HL ICES-005 for EMI and RFI FCC – CLASS A Non-Consumer

ANSI - C82.11 - Cons 2002, ANSI - C62.41 - 1991 Product is compliant with material restriction requirements of RoHS

UltraMax® General Series 347V Instant Start High Performance
T8 Instant Start Ballasts

74103 – GE232MAX-G-347 (Replaces GE232-N-347)

UltraMax® G-Series 347V Instant Start High-Efficiency

2 or 1– F32T8 347V "N" 0.87 BF UltraMax®G

- High-performance electronic ballast for all general fluorescent applications
- Instant start electronic ballast for long lamp starting cycles and low initial cost
- Light-weight, Slim Profile Mini Can Housing
- Parallel lamp operation means system maintenance is easier to manage
- Cold temperature 0°F Minimum Starting Temperature

General characteristics

Ballast Type	Electronic – High-Efficiency Instant Start
Starting Method	Instant start
Lamp Wiring	Parallel
Line Voltage Regulation(+/-)	10%
Ambient Temperature (MAX)	40°C (104°F)
Case Temperature (MAX)	70°C (158°F)
Ballast Factor	Normal
Power Factor Correction	Active
Sound Rating	A (20-24 decibels)
Enclosure Type	Metal
Additional Info	Auto-restart, Inherently Thermally Protected, UL Class P

Electrical characteristics

Supply Current Frequency	60 Hz

Order information

10 Pack	Pallet Pack	DIY Pack	IP Pack
74103			

Dimensions

Wiring diagram – LFL 1B – see example on Page 10-61	
Case dimensions – Ref Drawing -A – see Page 10-62	
Length (L)	9.5 in (241 mm)
Width (W)	1.3 in (33 mm)
Height (H)	1.18 in (30 mm)
Mounting dimensions	
Mount Length (M)	8.9 in (226 mm)
Mount Width (X or F)	0.87 in (22 mm)
Mount Slots (MS)	0.3 in (8 mm)
Weight	1.04lbs
Exit Type	Side
Remote Mounting Distance to Lamp (F32T8)	18 ft
Remote Mounting Wire Gauge	18 AWG
Lead lengths	
Black	25 in (635 mm)
White	25 in (635 mm)
Blue	31 in (787 mm)
Red	45 in (1143 mm)

Specifications by lamp and wattage

Lamp	# of Lamps	Line Volts (V)	System Watts (W)	Nom. Line Current (A)	System Ballast Factor	Ballast Efficacy Factor	Power Factor% (>=)	Crest Factor (<=)	THD% (<=)	Min. Starting Temp (°F/°C)
	2	347	55	0.16	0.87	1.58	99	1.7	10	0/-18
F32T8	1	347	34	0.11	1.03	3.03	97	1.7	10	0/-18
	2	347	52	0.15	0.85	1.63	99	1.7	10	60/16
F32T8/WM	1	347	32	0.09	1.01	3.16	97	1.7	10	60/16
	2	347	48	0.14	0.84	1.75	99	1.7	10	60/16
F28T8	1	347	30	0.09	1.00	3.33	96	1.7	10	60/16
F32T8/25W	2	347	44	0.13	0.84	1.91	99	1.7	10	60/16
	2	347	41	0.12	0.88	2.15	98	1.7	10	0/-18
F25T8	1	347	26	0.08	1.04	4.00	95	1.7	11	0/-18
F25T8/WM	2	347	35	0.11	0.88	2.51	98	1.7	10	60/16
	2	347	29	0.09	0.83	2.86	96	1.7	10	0/-18
F17T8	1	347	19	0.07	0.99	5.21	84	1.7	50	0/-18
F17T8/WM	2	347	24	0.08	0.83	3.46	96	1.7	10	60/16
	2	347	24	0.08	0.76	3.17	90	1.7	30	0/-18
FE15T8	1	347	16	0.06	0.89	5.56	78	1.7	66	0/-18
	2	347	44	0.13	0.88	2.00	98	1.7	10	0/-18
F25T12	1	347	28	0.08	1.07	3.82	96	1.7	10	0/-18

Safety and performance

UL Class P UL Type 1 Outdoor UL Type HL ICES-005 for EMI and RFI FCC – CLASS A Non-Consumer

ANSI - C82.11 - Cons 2002, ANSI - C62.41 - 1991 Product is compliant with material restriction requirements of RoHS

See page E-1 for warranty information.

UltraMax® General Series 347V Instant Start High Performance
T8 Instant Start Ballasts

74105 – GE332MAX-G-347 (Replaces GE332-N-347)

UltraMax® G-Series 347V Instant Start High-Efficiency

3 or 2– F32T8 347V "N" 0.87 BF UltraMax®G

- High-performance electronic ballast for all general fluorescent applications
- Instant start electronic ballast for long lamp starting cycles and low initial cost
- Light-weight, Slim Profile Mini Can Housing
- Parallel lamp operation means system maintenance is easier to manage
- Cold temperature 0°F Minimum Starting Temperature

General characteristics

Ballast Type	Electronic – High-Efficiency Instant Start
Starting Method	Instant start
Lamp Wiring	Parallel
Line Voltage Regulation(+/-)	10%
Ambient Temperature (MAX)	40°C (104°F)
Case Temperature (MAX)	70°C (158°F)
Ballast Factor	Normal
Power Factor Correction	Active
Sound Rating	A (20-24 decibels)
Enclosure Type	Metal
Additional Info	Auto-restart, Inherently Thermally Protected, UL Class P

Electrical characteristics

Supply Current Frequency	60 Hz

Order information

10 Pack	Pallet Pack	DIY Pack	IP Pack
74105			

Dimensions

Wiring diagram – LFL 1C – see example on Page 10-61	
Case dimensions – Ref Drawing -A – see Page 10-62	
Length (L)	9.5 in (241 mm)
Width (W)	1.3 in (33 mm)
Height (H)	1.18 in (30 mm)
Mounting dimensions	
Mount Length (M)	8.9 in (226 mm)
Mount Width (X or F)	0.87 in (22 mm)
Mount Slots (MS)	0.3 in (8 mm)
Weight	1.15lbs
Exit Type	Side
Remote Mounting Distance to Lamp (F32T8)	18 ft
Remote Mounting Wire Gauge	18 AWG
Lead lengths	
Black	25 in (635 mm)
White	25 in (635 mm)
Blue	31 in (787 mm)
Red	45 in (1143 mm)

Specifications by lamp and wattage

Lamp	# of Lamps	Line Volts (V)	System Watts (W)	Nom. Line Current (A)	System Ballast Factor	Ballast Efficacy Factor	Power Factor% (>=)	Crest Factor (<=)	THD% (<=)	Min. Starting Temp (°F/°C)
	3	347	82	0.23	0.87	1.06	99	1.7	10	0/-18
F32T8	2	347	60	0.17	0.97	1.62	99	1.7	10	0/-18
	3	347	78	0.22	0.85	1.09	99	1.7	10	60/16
F32T8/WM	2	347	57	0.17	0.98	1.72	99	1.7	10	60/16
	3	347	73	0.20	0.83	1.14	99	1.7	10	60/16
F28T8	2	347	53	0.15	0.94	1.77	99	1.7	10	60/16
F32T8/25W	3	347	66	0.19	0.83	1.26	99	1.7	10	60/16
	3	347	62	0.18	0.88	1.42	99	1.7	10	0/-18
F25T8	2	347	48	0.14	0.98	2.04	99	1.7	10	0/-18
F25T8/WM	3	347	53	0.17	0.88	1.66	99	1.7	10	60/16
	3	347	44	0.13	0.83	1.89	98	1.7	10	0/-18
F17T8	2	347	34	0.11	0.93	2.74	91	1.7	34	0/-18
F17T8/WM	3	347	37	0.11	0.83	2.24	98	1.7	10	60/16
	3	347	32	0.10	0.76	2.38	96	1.7	14	0/-18
FE15T8	2	347	25	0.08	0.85	3.40	91	1.7	41	0/-18
	3	347	65	0.19	0.83	1.28	99	1.7	10	0/-18
F25T12	2	347	51	0.15	1.00	1.96	99	1.7	10	0/-18

Safety and performance

UL LISTED; UL Class P; UL Type 1 Outdoor; UL Type HL; ICES-005 for EMI and RFI; FCC – CLASS A Non-Consumer

ANSI - C82.11 - Cons 2002, ANSI - C62.41 - 1991 Product is compliant with material restriction requirements of RoHS

See page E-1 for warranty information.

UltraMax® General Series 347V Instant Start High Performance
T8 Instant Start Ballasts

74107 – GE432MAX-G-347 (Replaces GE432-N-347)

UltraMax® G-Series 347V Instant Start High-Efficiency

4 or 3– F32T8 347V "N" 0.87 BF UltraMax®G

- High-performance electronic ballast for all general fluorescent applications
- Instant start electronic ballast for long lamp starting cycles and low initial cost
- Light-weight, Slim Profile Mini Can Housing
- Parallel lamp operation means system maintenance is easier to manage
- Cold temperature 0°F Minimum Starting Temperature

General characteristics

Ballast Type	Electronic – High-Efficiency Instant Start
Starting Method	Instant start
Lamp Wiring	Parallel
Line Voltage Regulation(+/-)	10%
Ambient Temperature (MAX)	40°C (104°F)
Case Temperature (MAX)	70°C (158°F)
Ballast Factor	Normal
Power Factor Correction	Active
Sound Rating	A (20-24 decibels)
Enclosure Type	Metal
Additional Info	Auto-restart, Inherently Thermally Protected, UL Class P

Electrical characteristics

Supply Current Frequency	60 Hz

Order information

10 Pack	Pallet Pack	DIY Pack	IP Pack
74107			

Dimensions

Wiring diagram – LFL 1D – see example on Page 10-61	
Case dimensions – Ref Drawing -A – see Page 10-62	
Length (L)	9.5 in (241 mm)
Width (W)	1.3 in (33 mm)
Height (H)	1.18 in (30 mm)
Mounting dimensions	
Mount Length (M)	8.9 in (226 mm)
Mount Width (X or F)	0.87 in (22 mm)
Mount Slots (MS)	0.3 in (8 mm)
Weight	1.15lbs
Exit Type	Side
Remote Mounting Distance to Lamp (F32T8)	18 ft
Remote Mounting Wire Gauge	18 AWG
Lead lengths	
Black	25 in (635 mm)
White	25 in (635 mm)
Red & Blue	31 in (787 mm)
Yellow	47 in (1194 mm)

Specifications by lamp and wattage

Lamp	# of Lamps	Line Volts (V)	System Watts (W)	Nom. Line Current (A)	System Ballast Factor	Ballast Efficacy Factor	Power Factor% (>=)	Crest Factor (<=)	THD% (<=)	Min. Starting Temp (°F/°C)
	4	347	109	0.30	0.88	.81	99	1.7	10	0/-18
F32T8	3	347	87	0.25	0.95	1.09	99	1.7	10	0/-18
	4	347	103	0.29	0.86	.83	99	1.7	10	60/16
F32T8/WM	3	347	83	0.24	0.94	1.13	99	1.7	10	60/16
	4	347	96	0.27	0.84	.88	99	1.7	10	60/16
F28T8	3	347	76	0.22	0.92	1.21	99	1.7	10	60/16
F32T8/25W	4	347	87	0.25	0.84	.97	99	1.7	10	60/16
	4	347	83	0.24	0.88	1.06	99	1.7	10	0/-18
F25T8	3	347	68	0.20	0.96	1.41	99	1.7	10	0/-18
F25T8/WM	4	347	71	0.20	0.88	1.24	99	1.7	10	60/16
	4	347	52	0.17	0.84	1.62	99	1.7	10	0/-18
F17T8	3	347	48	0.14	0.91	1.90	98	1.7	10	0/-18
F17T8/WM	4	347	44	0.13	0.84	1.91	99	1.7	10	60/16
	4	347	47	0.14	0.76	1.62	98	1.7	12	0/-18
FE15T8	3	347	38	0.12	0.82	2.16	91	1.7	36	0/-18
	4	347	87	0.25	0.89	1.02	99	1.7	10	0/-18
F25T12	3	347	72	0.21	0.97	1.35	99	1.7	10	0/-18

Safety and performance

c UL us LISTED; UL Class P; UL Type 1 Outdoor; UL Type HL; ICES-005 for EMI and RFI; FCC – CLASS A Non-Consumer

ANSI - C82.11 - Cons 2002, ANSI - C62.41 - 1991 Product is compliant with material restriction requirements of RoHS

See page E-1 for warranty information.

UltraMax® General Series 347V Instant Start High Performance
T8 Instant Start Ballasts

74099 – GE259MAX-G-347 (Replaces GE259-N-347)

UltraMax® G-Series 347V Instant Start High-Efficiency

2 or 1– F96T8 347V "N" 0.87 BF UltraMax®G

- High-performance electronic ballast for all general fluorescent applications
- Instant start electronic ballast for long lamp starting cycles and low initial cost
- Light-weight, Slim Profile Mini Can Housing
- Parallel lamp operation means system maintenance is easier to manage
- Cold temperature 0°F Minimum Starting Temperature

General characteristics

Ballast Type	Electronic – High-Efficiency Instant Start
Starting Method	Instant start
Lamp Wiring	Parallel
Line Voltage Regulation(+/-)	10%
Ambient Temperature (MAX)	40°C (104°F)
Case Temperature (MAX)	70°C (158°F)
Ballast Factor	Normal
Power Factor Correction	Active
Sound Rating	A (20-24 decibels)
Enclosure Type	Metal
Additional Info	Auto-restart, Inherently Thermally Protected, UL Class P

Electrical characteristics

Supply Current Frequency	60 Hz

Order information

10 Pack	Pallet Pack	DIY Pack	IP Pack
74099	74100		

Dimensions

Wiring diagram – LFL 1B – see example on Page 10-61	
Case dimensions – Ref Drawing -A – see Page 10-62	
Length (L)	9.5 in (241 mm)
Width (W)	1.3 in (33 mm)
Height (H)	1.18 in (30 mm)
Mounting dimensions	
Mount Length (M)	8.9 in (226 mm)
Mount Width (X or F)	0.87 in (22 mm)
Mount Slots (MS)	0.3 in (8 mm)
Weight	1.04lbs
Exit Type	Side
Remote Mounting Distance to Lamp (F32T8)	18 ft
Remote Mounting Wire Gauge	18 AWG
Lead lengths	
Black	22 in (559 mm)
White	22 in (559 mm)
Blue	46 in (1168 mm)
Red	78 in (1981 mm)

Specifications by lamp and wattage

Lamp	# of Lamps	Line Volts (V)	System Watts (W)	Nom. Line Current (A)	System Ballast Factor	Ballast Efficacy Factor	Power Factor% (>=)	Crest Factor (<=)	THD% (<=)	Min. Starting Temp (°F/°C)
	2	347	108	0.31	0.88	0.81	99	1.7	10	0/-18
F96T8	1	347	67	0.20	1.06	1.58	9798	1.7	10	0/-18
	2	347	102	0.29	0.88	0.86	9999	1.7	10	60/16
F96T8/WM	1	347	64	0.19	1.05	1.64	9798	1.7	10	60/16
	2	347	95	0.27	1.05	1.11	9999	1.7	10	60/16
F96T8/WMP	1	347	60	0.17	1.26	2.10	9698	1.7	10	60/16

Safety and performance

UL Class P UL Type 1 Outdoor UL Type HL ICES-005 for EMI and RFI FCC – CLASS A Non-Consumer

ANSI - C82.11 - Cons 2002, ANSI - C62.41 - 1991 Product is compliant with material restriction requirements of RoHS

ProLine® T8 Instant Start 120V and 277V High Performance

T8 Instant Start Ballasts For F17 (2 ft), F25 (3 ft), F32 (4 ft), F40 (5 ft) Lamps

23673 – GE-332-120-N

ProLine® T8 Instant Start High Performance

3 or 2 – F32T8 120V "N" .87 BF ProLine®

- High-performance electronic ballast for all general fluorescent applications
- Instant start electronic ballast for long lamp starting cycles and low initial cost
- Lightweight, low-profile housing
- < 10% THD, > 99% power factor
- Parallel lamp operation means system maintenance is easier to manage
- Anti-striation control for better light quality, with no visible striations

General characteristics

Ballast Type	Electronic – Standard Instant Start
Starting Method	Instant start
Lamp Wiring	Parallel
Line Voltage Regulation (+/-)	10%
Case Temperature (MAX)	70°C (158°F)
Ballast Factor	Normal
Power Factor Correction	Active
Sound Rating	A (20-24 decibels)
Additional Info	Auto-restart, Inherently Thermally Protected, UL Class P

Electrical characteristics

Supply Current Frequency	50 Hz/60 Hz

Order information

10 Pack	Pallet Pack	DIY Pack	IP Pack
23673	24165		

Dimensions

Wiring diagram – LFL 1C – see example on Page 10-61	
Case dimensions – Ref Drawing -A – see Page 10-62	
Length (L)	9.5 in (241 mm)
Width (W)	1.7 in (43 mm)
Height (H)	1.18 in (30 mm)
Mounting dimensions	
Mount Length (M)	8.9 in (226 mm)
Mount Width (X or F)	1.18 in (30 mm)
Mount Slots (MS)	0.3 in (8 mm)
Weight	1.40 lbs
Exit Type	Side
Remote Mounting Distance to Lamp (F32T8)	18 ft
Remote Mounting Wire Gauge	18 AWG
Lead lengths	**Length (± 1 in)**
Black	25 in (635 mm)
Red	45 in (1143 mm)
White	25 in (635 mm)
Blue	31 in (787 mm)

Specifications by lamp and wattage

Lamp	# of Lamps	Line Volts (V)	System Watts (W)	Nom. Line Current (A)	System Ballast Factor	Ballast Efficacy Factor	Power Factor% (>=)	Crest Factor (<=)	THD% (<=)	Min. Starting Temp (°F/°C)
	3	120	85	0.73	0.87	1.02	99	1.7	10	0/-18
F32T8	2	120	65	0.56	0.94	1.44	99	1.7	10	0/-18
	3	120	79	0.68	0.86	1.08	99	1.7	10	60/16
F32T8/WM	2	120	60	0.51	0.94	1.56	99	1.7	10	60/16
F40T8	2	120	78	0.67			99	1.7	10	0/-18
	3	120	72	0.62	0.84	1.16	99	1.7	10	60/16
F28T8	2	120	54	0.47	0.91	1.68	99	1.7	10	60/16
	3	120	69	0.60	0.87	1.26	99	1.7	10	0/-18
F25T12	2	120	54	0.46	0.94	1.74	99	1.7	10	0/-18
	3	120	67	0.58	0.87	1.29	99	1.7	10	0/-18
F25T8	2	120	51	0.44	0.97	1.90	99	1.7	10	0/-18
	3	120	47	0.41	0.91	1.93	99	1.7	10	0/-18
	2	120	30	0.31	0.97	3.23	99	1.7	12	0/-18
F17T8	2	120	30	0.26	0.98	3.26	98	1.7	13	0/-18

Safety and performance

UL Type 1 Outdoor UL Type HL FCC – CLASS A Non-Consumer UL Class P c UL us LISTED Product is compliant with material restriction requirements of RoHS

See page E-1 for warranty information.

ProLine® T8 Instant Start 120V and 277V High Performance

T8 Instant Start Ballasts For 46 – 59W 4 ft – 8 ft Slimline Lamps

23677 – GE-259-120-N

ProLine® T8 Instant Start High Performance

2 or 1 – F96T8 120V Normal Light .87 BF ProLine®

- High-performance electronic ballast for all general fluorescent applications
- Instant start electronic ballast for long lamp starting cycles and low initial cost
- Lightweight, low-profile housing
- < 10% THD, > 99% power factor
- Parallel lamp operation means system maintenance is easier to manage
- Anti-striation control for better light quality, with no visible striations

General characteristics

Ballast Type	Electronic – Standard Instant Start
Starting Method	Instant start
Lamp Wiring	Parallel
Line Voltage Regulation (+/-)	10%
Case Temperature (MAX)	70°C (158°F)
Ballast Factor	Normal
Power Factor Correction	Active
Sound Rating	A (20-24 decibels)
Additional Info	Auto-restart, Inherently Thermally Protected, UL Class P

Electrical characteristics

Supply Current Frequency	50 Hz/60 Hz

Order information

10 Pack	Pallet Pack	DIY Pack	IP Pack
23677			

Dimensions

Wiring diagram – LFL 1B – see example on Page 10-61	
Case dimensions – Ref Drawing -A – see Page 10-62	
Length (L)	9.5 in (241 mm)
Width (W)	1.7 in (43 mm)
Height (H)	1.18 in (30 mm)
Mounting dimensions	
Mount Length (M)	8.9 in (226 mm)
Mount Width (X or F)	1.18 in (30 mm)
Mount Slots (MS)	0.3 in (8 mm)
Weight	1.40 lbs
Exit Type	Side
Remote Mounting Distance to Lamp	18 ft
Remote Mounting Wire Gauge	18 AWG
Lead lengths	**Length (± 1 in)**
Black	25 in (635 mm)
Red	66 in (1676 mm)
White	25 in (635 mm)
Blue	58 in (1473 mm)

Specifications by lamp and wattage

Lamp	# of Lamps	Line Volts (V)	System Watts (W)	Nom. Line Current (A)	System Ballast Factor	Ballast Efficacy Factor	Power Factor% (>=)	Crest Factor (<=)	THD% (<=)	Min. Starting Temp (°F/°C)
	2	120	112	0.96	0.87	0.77	99	1.7	10	0/-18
F96T8	1	120	71	0.61	1.04	1.46	99	1.7	10	0/-18
	2	120	104	0.89	0.87	0.83	99	1.7	10	0/-18
F96T8/WM	1	120	65	0.56	1.04	1.60	99	1.7	10	0/-18
	1	120					99	1.7	10	0/-18
F96T8/WMP	2	120					99	1.7	10	0/-18

Safety and performance

UL Type 1 Outdoor UL Type HL FCC – CLASS A Non-Consumer UL Class P Product is compliant with material restriction requirements of RoHS

See page E-1 for warranty information.

Residential Grade ProLine® T8 120V
T8 Instant Start Ballasts For F17 (2 ft), F25 (3 ft), F32 (4 ft) Lamps

97782 – GE232-120-RES

Residential Grade ProLine® T8 120V

2 or 1– F32T8 120V "N" 0.87 BF Residential ProLine®

- Residential grade -instant start
- EMI/RFI meets FCC Class B Consumer Limits
- Meets ballast requirements of Energy Star Residential Lighting Fixture program
- Light-weight, Slim Profile Mini Can Housing

General characteristics

Ballast Type	Electronic – Standard Instant Start
Starting Method	Instant start
Lamp Wiring	Parallel
Line Voltage Regulation(+/-)	10%
Ambient Temperature (MAX)	40°C (104°F)
Case Temperature (MAX)	70°C (158°F)
Ballast Factor	Normal
Power Factor Correction	
Sound Rating	A (20-24 decibels)
Enclosure Type	Metal
Additional Info	Auto-restart, Inherently Thermally Protected, UL Class P

Electrical characteristics

Supply Current Frequency	50 Hz/60 Hz

Order information

10 Pack	Pallet Pack	DIY Pack	IP Pack
97782		93884	

Dimensions

Wiring diagram – LFL 1B – see example on Page 10-61	
Case dimensions – Ref Drawing -A – see Page 10-62	
Length (L)	9.5 in (241 mm)
Width (W)	1.3 in (33 mm)
Height (H)	1.18 in (30 mm)
Mounting dimensions	
Mount Length (M)	8.9 in (226 mm)
Mount Width (X or F)	0.87 in (22 mm)
Mount Slots (MS)	0.3 in (8 mm)
Weight	1.04lbs
Exit Type	Side
Remote Mounting Distance to Lamp (F32T8)	18 ft
Remote Mounting Wire Gauge	18 AWG
Lead lengths	
Black	25 in (635 mm)
White	25 in (635 mm)
Blue	31 in (787 mm)
Red	45 in (1143 mm)

Specifications by lamp and wattage

Lamp	# of Lamps	Line Volts (V)	System Watts (W)	Nom. Line Current (A)	System Ballast Factor	Ballast Efficacy Factor	Power Factor% (>=)	Crest Factor (<=)	THD% (<=)	Min. Starting Temp (°F/°C)
	2	120	54	0.8	0.83	1.54	55	1.7	79	0/-18
F32T8	1	120	33	0.55	0.99	3.00	51	1.7	82	0/-18
	2	120	50	0.76	0.82	1.64	55	1.7	80	60/16
F32T8/WM	1	120	32	0.53	0.99	3.09	50	1.7	83	60/16
	2	120	47	0.72	0.81	1.72	54	1.7	81	60/16
F28T8	1	120	30	0.5	0.97	3.23	50	1.7	83	60/16
	2	120	42	0.65	0.88	2.10	53	1.7	82	0/-18
F25T8	1	120	26	0.45	1.04	4.00	48	1.7	84	0/-18
	2	120	30	0.49	0.88	2.93	49	1.7	85	0/-18
F17T8	1	120	19	0.35	1.03	5.42	45	1.7	85	0/-18

Safety and performance

UL Class P UL Type 1 Outdoor UL Type HL FCC – CLASS B Consumer ANSI - C82.11 - Cons 2002, ANSI - C62.41 - 1991

Product is compliant with material restriction requirements of RoHS

See page E-1 for warranty information.

Residential Grade ProLine® T8 120V

T8 Instant Start Ballasts For F17 (2 ft), F25 (3 ft), F32 (4 ft) Lamps

97783 – GE432-120-RES

Residential Grade ProLine® T8 120V

4 or 3 – F32T8 120V "N" .87 BF Residential ProLine®

- Residential grade -instant start
- EMI/RFI meets FCC Class B Consumer Limits
- Meets ballast requirements of Energy Star Residential Lighting Fixture program
- Light-weight, Slim Profile Mini Can Housing

General characteristics

Ballast Type	Electronic – Standard Instant Start
Starting Method	Instant start
Lamp Wiring	Parallel
Line Voltage Regulation(+/-)	10%
Ambient Temperature (MAX)	40°C (104°F)
Case Temperature (MAX)	70°C (158°F)
Ballast Factor	Normal
Power Factor Correction	
Sound Rating	A (20-24 decibels)
Enclosure Type	Metal
Additional Info	Auto-restart, Inherently Thermally Protected, UL Class P

Electrical characteristics

Supply Current Frequency	50Hz/60Hz

Order information

10 Pack	Pallet Pack	DIY Pack	IP Pack
97783		93885	

Dimensions

Wiring diagram – LFL 1D – see example on Page 10-61	
Case dimensions – Ref Drawing -A – see Page 10-62	
Length (L)	9.5 in (241 mm)
Width (W)	1.3 in (33 mm)
Height (H)	1.18 in (30 mm)
Mounting dimensions	
Mount Length (M)	8.9 in (226 mm)
Mount Width (X or F)	0.87 in (22 mm)
Mount Slots (MS)	0.3 in (8 mm)
Weight	1.04lbs
Exit Type	Side
Remote Mounting Distance to Lamp (F32T8)	18 ft
Remote Mounting Wire Gauge	18 AWG
Lead lengths	
White and Black	25 in (635 mm)
Blue	31 in (787 mm)
Red	31 in (787 mm)
Yellow	47 in (1194 mm)

Specifications by lamp and wattage

Lamp	# of Lamps	Line Volts (V)	System Watts (W)	Nom. Line Current (A)	System Ballast Factor	Ballast Efficacy Factor	Power Factor% (>=)	Crest Factor (<=)	THD% (<=)	Min. Starting Temp (°F/°C)
F32T8	4	120	105	1.62	0.83	0.79	57	1.7	78	0/-18
	3	120	86	1.38	0.88	1.02	55	1.7	79	0/-18
F32T8/WM	4	120	98	1.50	0.81	0.82	56	1.7	80	60/16
	3	120	81	1.29	0.88	1.08	54	1.7	80	60/16
F28T8	4	120	90	1.42	0.79	0.87	55	1.7	80	60/16
	3	120	75	1.23	0.87	1.16	53	1.7	80	60/16
F25T8	4	120	83	1.31	0.87	1.04	54	1.7	82	0/-18
	3	120	68	1.13	0.94	1.38	52	1.7	81	0/-18
F17T8	4	120	58	0.98	0.86	1.48	51	1.7	85	0/-18
	3	120	48	0.84	0.93	1.93	49	1.7	83	0/-18

Safety and performance

UL LISTED; UL Class P; UL Type 1 Outdoor; UL Type HL; FCC – CLASS B Consumer; ANSI - C82.11 - Cons 2002, ANSI - C62.41 - 1991

Product is compliant with material restriction requirements of RoHS

See page E-1 for warranty information.

Electromagnetic T8 120V and 277V Ballasts

T8 Rapid Start Ballasts For F17 (2 ft), F25 (3 ft), F32 (4 ft) Lamps

87125 – GEM232T8RS120

Electromagnetic T8 Ballasts

2 – F32T8, RS, 120V, Magnetic Ballast (M232SR120C)

- Magnetic ballast construction for all general fluorescent lighting
- Extends lamp life in frequently switched applications
- Color coded ballast and package labels reduce misapplication errors (120V Yellow, 277V Red)
- Great for areas requiring no EMI/RFI noise
- Anti-striation control for better light quality, with no visible striations

General characteristics

Ballast Type	Magnetic – Rapid Start
Starting Method	Rapid start
Lamp Wiring	Series
Line Voltage Regulation (+/-)	5%
Ambient Temperature (MAX)	105°F (41°C)
Case Temperature (MAX)	90°C (194°F)
Ballast Factor	Normal
Power Factor Correction	
Sound Rating	A (20-24 decibels)
Additional Info	Auto-restart, Inherently Thermally Protected, UL Class P

Electrical characteristics

Supply Current Frequency	60 Hz

Order information

10 Pack	Pallet Pack	DIY Pack	IP Pack
87125			87125

Dimensions

Wiring diagram – 87125 – see example on Page 10-61	
Case dimensions – 87125 – see Page 10-62	
Length (L)	9.5 in (241 mm)
Width (W)	2.4 in (61 mm)
Height (H)	1.5 in (38 mm)
Mounting dimensions	
Mount Length (M)	8.9 in (226 mm)
Mount Width (X or F)	1.7 in (43 mm)
Mount Slots (MS)	0.3 in (8 mm)
Weight	3.40 lbs
Exit Type	Side
Remote Mounting Distance to Lamp (F32T8)	10 ft
Remote Mounting Wire Gauge	18 AWG
Lead lengths	**Length (± 1 in)**
Blue and Red	15 in (381 mm)
White and Black	15 in (381 mm)
Yellow	15 in (381 mm)

Specifications by lamp and wattage

Lamp	# of Lamps	Line Volts (V)	System Watts (W)	Nom. Line Current (A)	System Ballast Factor	Ballast Efficacy Factor	Power Factor% (>=)	Crest Factor (<=)	THD% (<=)	Min. Starting Temp (°F/°C)
	2	120	73	0.65	0.92	1.25	93	1.7	6	50/10
F32T8	1	120	55	0.46	1.20	2.15	99	1.9	13	50/10
	2	277	73	0.65	0.92	1.25	93	1.7	6	50/10
F32T8/U	1	277	55	0.46	1.20	2.15	99	1.9	13	50/10
	2	120	66	0.57	0.97	1.45	98	1.6	6	50/10
F25T8	1	120	50	0.43	1.00	2.00	99	1.9	16	50/10
	2	277	66	0.57	0.97	1.45	98	1.6	6	50/10
F25T8/U	1	277	50	0.43	1.00	2.00	99	1.9	16	50/10
	2	120	53	0.45	1.00	1.90	99	1.9	12	50/10
F17T8	1	120	44	0.38	1.10	2.40	96	2.0	23	50/10
	2	277	53	0.45	1.00	1.90	99	1.9	12	50/10
F17T8/U	1	277	44	0.38	1.10	2.40	96	2.0	23	50/10

Safety and performance

UL Type 1 Outdoor · UL Type HL · UL Class P · c UL us LISTED

See page E-1 for warranty information.

Wiring Diagrams
T8 Instant Start Ballasts

LFL 1A

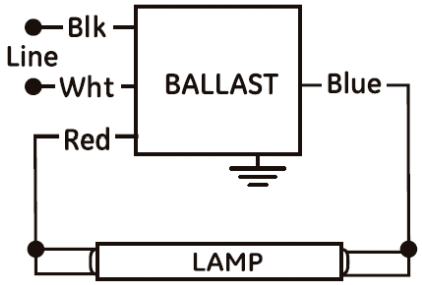

LFL 1B

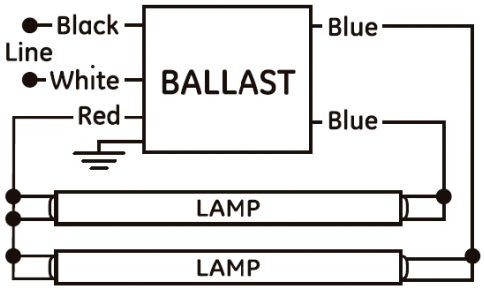

LFL 1C

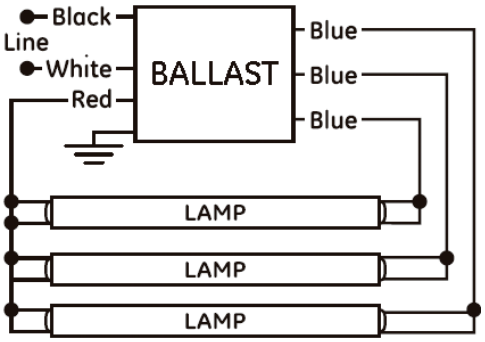

LFL 1D

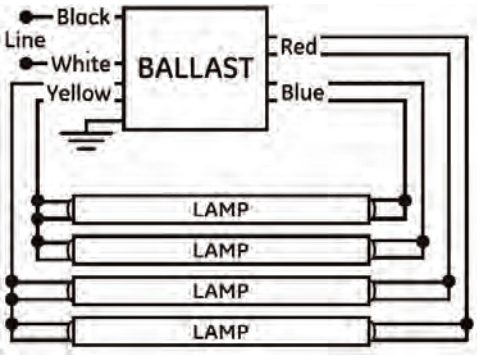

LFL -6H

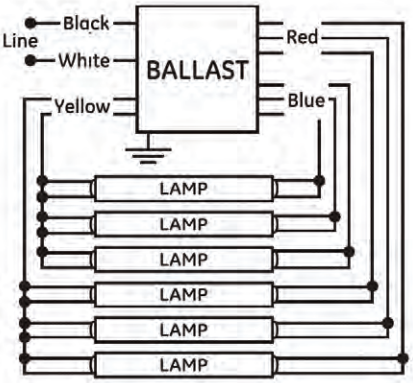

87125

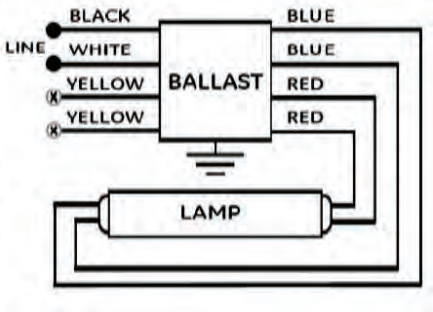

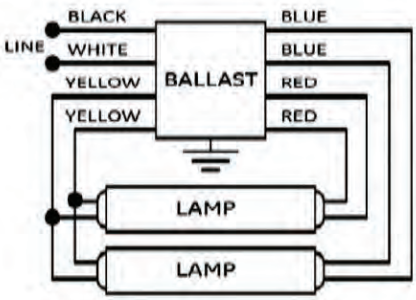

See page E-1 for warranty information.

Case Dimensions
T8 Instant Start Ballasts

-A

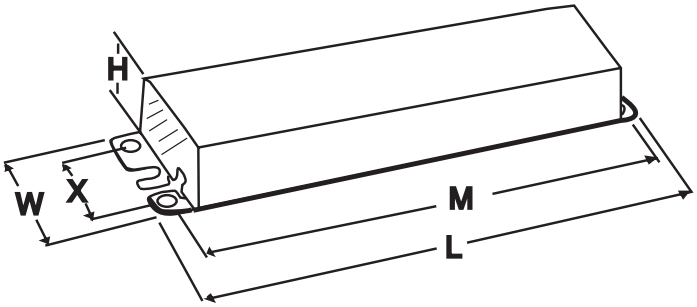

ST

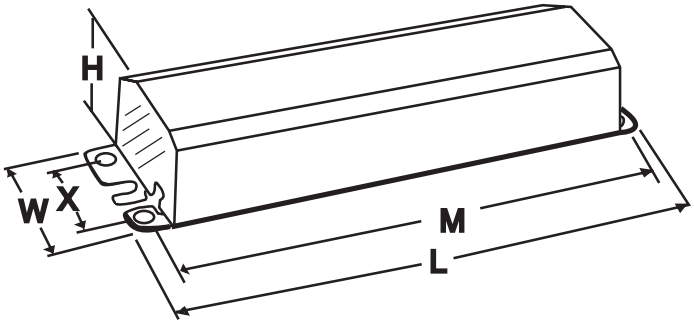

LG

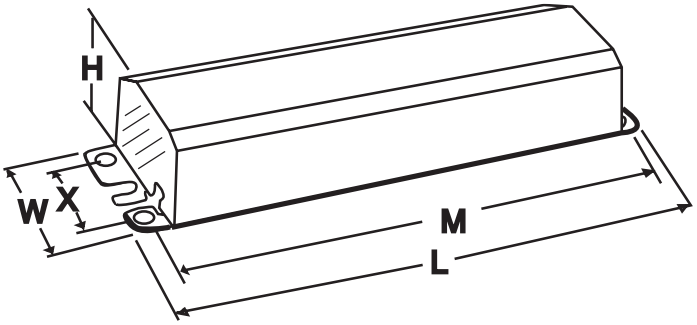

87125

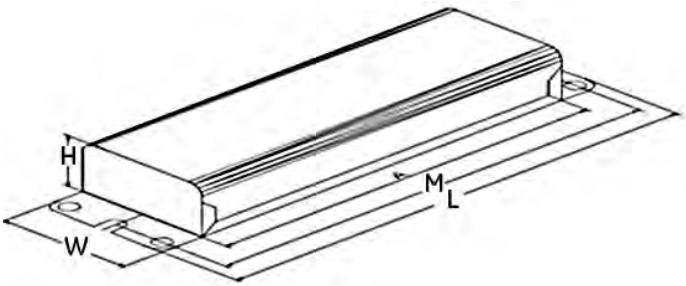

See page E-1 for warranty information.

Table of Contents
T8 Programmed Start Ballasts

UltraStart® T8 120–277V Programmed Start

T8 Programmed Start Ballasts For F17 (2 ft), F25 (3 ft), F32 (4 ft) Lamps

75952 – GE132-MVPS-L

UltraStart® T8 Programmed Start

1 F32T8 120V-277V Low Watts .71 BF <10% THD UltraStart®

- A new generation of ultra-efficient Programmed Start ballasts
- Anti-striation circuitry reduces striations with energy saving lamps.
- Extends lamp life in frequently switched applications (>100,000 on/off cycles)
- Multi-voltage technology handles voltage from 120 to 277V
- Starting time visually the same as instant start
- Light-weight, Slim Profile Mini Can Housing

General characteristics

Ballast Type	Electronic - Program/ Rapid Start
Starting Method	Programmed start
Lamp Wiring	Parallel
Line Voltage Regulation (+/-)	10 %
Ambient Temperature (MAX)	
Case Temperature (MAX)	70 °C (158 °F)
Ballast Factor	Low-PS (.71)
Power Factor Correction	Active
Sound Rating	A (20-24 decibels)
Enclosure Type	Metal
Additional Info	Anti-striation control, Inherently Thermally Protected, UL Class P, Universal voltage

Electrical characteristics

Supply Current Frequency (MIN)	50Hz/60 Hz

Order information

10 Pack	Pallet Pack	DIY Pack	IP Pack
75952			

Dimensions

Wiring diagram – LFL PS1 – see example on page 11-21	
Case dimensions- Ref Drawing -A – see Page 11-22	
Length (L)	9.5 in (241 mm)
Width (W)	1.3 in (43 mm)
Height (H)	1.18 in (30 mm)
Mounting dimensions	
Mount Length (M)	8.9 in (226 mm)
Mount Width (X or F)	1.18 in (30 mm)
Mount Slots (MS)	0.3 in (8 mm)
Weight	1.65 lbs
Remote Mounting Distance to Lamp (F32T8)	18 ft
Remote Mounting Wire Gauge	18 AWG
Lead lengths	**Length (± 1 in.)**
Black	25.0 in (635 mm)
White	25.0 in (635 mm)
Blue	33.0 in (838 mm)
Yellow	47.0 in (1194 mm)

Specifications by lamp and wattage

Lamp	# of Lamps	Line Volts	System Watts	Nom. Line Current	System Ballast Factor	Ballast Efficacy Factor	Power Factor% (>=)	Crest Factor (<=)	THD% (<=)	Min. Starting Temp (°F/°C)
	1	120	25	0.22 A	0.72	2.88	99	1.7	10	0/-18
F32T8	1	277	25	0.10 A	0.72	2.88	96	1.7	10	0/-18
	1	120	23	0.20 A	0.71	3.09	99	1.7	10	50/10
F32T8/WM	1	277	23	0.09 A	0.71	3.09	95	1.7	10	50/10
	1	120	22	0.19 A	0.71	3.23	99	1.7	10	50/10
F28T8	1	277	22	0.09 A	0.71	3.23	94	1.7	10	50/10
	1	120	20	0.18 A	0.71	3.55	99	1.7	10	50/10
F32T8/25W	1	277	21	0.08 A	0.71	3.38	94	1.7	10	50/10
	1	277	20	0.08 A	0.73	3.65	93	1.7	10	0/-18
F25T8	1	120	19	0.17 A	0.73	3.84	99	1.7	10	0/-18
	1	120	17	0.15 A	0.71	4.18	99	1.7	10	50/10
F25T8/WM	1	277	18	0.07 A	0.71	3.94	92	1.7	10	50/10
	1	120	14	0.12 A	0.75	5.36	99	1.7	10	0/-18
F17T8	1	277	15	0.06 A	0.75	5.00	89	1.7	10	0/-18
	1	120	13	0.11 A	0.74	5.69	99	1.7	10	50/10
F17T8/WM	1	277	13	0.06 A	0.74	5.69	87	1.7	10	50/10
	1	120	12	0.10 A	0.66	5.50	99	1.7	10	0/-18
FE15T8	1	277	13	0.10 A	0.66	5.08	86	1.7	10	0/-18
	1	120	29	0.25 A	0.71	2.45	99	1.7	10	0/-18
F40T8	1	277	29	0.11 A	0.71	2.45	97	1.7	10	0/-18
	1	120	20	0.18 A	0.72	3.60	99	1.7	10	0/-18
F25T12	1	277	21	0.08 A	0.72	3.43	94	1.7	10	0/-18

Safety and performance

UL Type 1 Outdoor UL Type HL FCC – CLASS A Non-Consumer UL Class P ANSI – C62.41 Product is compliant with material restriction requirements of RoHS

cUL Listed UL Listed NEMA Premium

See page E-1 for warranty information.

UltraStart® T8 120–277V Programmed Start

T8 Programmed Start Ballasts For F17 (2 ft), F25 (3 ft), F32 (4 ft) Lamps

75953 – GE132-MVPS-N

UltraStart® T8 Programmed Start

1 F32T8 120V-277V Normal Light .88 BF <10% THD UltraStart®

- < 10% THD, > 99% power factor
- A new generation of ultra-efficient Programmed Start ballasts
- Anti-striation circuitry reduces striations with energy saving lamps.
- Extends lamp life in frequently switched applications (>100,000 on/off cycles)
- Multi-voltage technology handles voltage from 120 to 277V
- Starting time visually the same as instant start
- Light-weight, Slim Profile Mini Can Housing

General characteristics

Ballast Type	Electronic - Program/ Rapid Start
Starting Method	Programmed start
Lamp Wiring	Parallel
Line Voltage Regulation (+/-)	10 %
Ambient Temperature (MAX)	
Case Temperature (MAX)	70 °C (158 °F)
Ballast Factor	Normal
Power Factor Correction	Active
Sound Rating	A (20-24 decibels)
Enclosure Type	Metal
Additional Info	Anti-striation control, Inherently Thermally Protected, UL Class P, Universal voltage

Electrical characteristics

Supply Current Frequency	50Hz
Supply Current Frequency (MIN)	50Hz/60 Hz

Order information

10 Pack	Pallet Pack	DIY Pack	IP Pack
75953			

Dimensions

Wiring diagram – LFL PS1 – see example on page 11-21	
Case dimensions- Ref Drawing -A – see Page 11-22	
Length (L)	9.5 in (241 mm)
Width (W)	1.3 in (43 mm)
Height (H)	1.18 in (30 mm)
Mounting dimensions	
Mount Length (M)	8.9 in (226 mm)
Mount Width (X or F)	1.18 in (30 mm)
Mount Slots (MS)	0.3 in (8 mm)
Weight	1.65 lbs
Exit Type	Side
Remote Mounting Distance to Lamp (F32T8)	18 ft
Remote Mounting Wire Gauge	18 AWG
Lead lengths	**Length (± 1 in.)**
Yellow	47.0 in (1194 mm)
White	25.0 in (635 mm)
Red	33.0 in (838 mm)
Blue	33.0 in (838 mm)
Black	25.0 in (635 mm)

Specifications by lamp and wattage

Lamp	# of Lamps	Line Volts	System Watts	Nom. Line Current	System Ballast Factor	Ballast Efficacy Factor	Power Factor% (>=)	Crest Factor (<=)	THD% (<=)	Min. Starting Temp (°F/°C)
	1	120	30	0.26 A	0.89	2.97	99	1.7	10	0/-18
F32T8	1	277	30	0.12 A	0.89	2.97	95	1.7	10	0/-18
	1	120	28	0.24 A	0.87	3.11	99	1.7	10	50/10
F32T8/WM	1	277	28	0.11 A	0.87	3.11	94	1.7	10	50/10
	1	120	26	0.22 A	0.87	3.35	99	1.7	10	50/10
F28T8	1	277	26	0.10 A	0.87	3.35	93	1.7	10	50/10
	1	120	24	0.21 A	0.86	3.58	99	1.7	10	50/10
F32T8/25W	1	277	24	0.10 A	0.86	3.58	93	1.7	10	50/10
	1	277	24	0.09 A	0.89	3.71	92	1.7	10	0/-18
F25T8	1	120	24	0.20 A	0.89	3.71	99	1.7	10	0/-18
	1	12	20	0.18 A	0.88	4.40	99	1.7	10	50/10
	1	120	20	0.18 A	0.88	4.40	99	1.7	10	50/10
F25T8/WM	1	277	21	0.08 A	0.88	4.19	90	1.7	10	50/10
	1	120	17	0.15 A	0.91	5.35	99	1.7	10	0/-18
F17T8	1	277	18	0.07 A	0.91	5.06	87	1.7	10	0/-18
	1	120	15	0.13 A	0.90	6.00	99	1.7	10	50/10
F17T8/WM	1	277	15	0.07 A	0.90	6.00	85	1.7	10	50/10
	1	120	14	0.12 A	0.80	5.71	99	1.7	10	0/-18
FE15T8	1	277	15	0.06 A	0.80	5.33	83	1.7	10	0/-18
	1	120	35	0.31 A	0.88	2.51	99	1.7	10	0/-18
F40T8	1	277	35	0.01 A	0.88	2.51	96	1.7	10	0/-18
	1	120	25	0.21 A	0.89	3.56	99	1.7	10	0/-18
F25T12	1	277	25	0.10 A	0.89	3.56	93	1.7	10	0/-18

Safety and performance

UL Type 1 Outdoor UL Type HL FCC – CLASS A Non-Consumer UL Class P ANSI – C62.41 Product is compliant with material restriction requirements of RoHS cUL Listed UL Listed NEMA Premium

See page E-1 for warranty information.

UltraStart® T8 120–277V Programmed Start

T8 Programmed Start Ballasts For F17 (2 ft), F25 (3 ft), F32 (4 ft) Lamps

75954 – GE132-MVPS-H

UltraStart® T8 Programmed Start

1 F32T8 120V-277V High Light 1.18 BF <10% THD UltraStart®

- A new generation of ultra-efficient Programmed Start ballasts
- Extends lamp life in frequently switched applications (> 100,000 on/off cycles)
- Starting time visually the same as instant start
- Multi-voltage technology handles voltage from 120 to 277V
- Anti-striation circuitry reduces striations with energy saving lamps.

General characteristics

Ballast Type	Electronic - Program/ Rapid Start
Starting Method	Programmed start
Lamp Wiring	Parallel
Line Voltage Regulation (+/-)	10 %
Ambient Temperature (MAX)	
Case Temperature (MAX)	70 °C (158 °F)
Ballast Factor	High (1.18)
Power Factor Correction	Active
Sound Rating	A (20-24 decibels)
Additional Info	Auto-restart, Inherently Thermally Protected, UL Class P

Electrical characteristics

Supply Current Frequency (MIN)	60 Hz

Order information

10 Pack	Pallet Pack	DIY Pack	IP Pack
75954			

Dimensions

Wiring diagram – LFL PS1 – see example on page 11-21	
Case dimensions- Ref Drawing -A – see Page 11-22	
Length (L)	9.5 in (241 mm)
Width (W)	1.7 in (43 mm)
Height (H)	1.18 in (30 mm)
Mounting dimensions	
Mount Length (M)	8.9 in (226 mm)
Mount Width (X or F)	1.18 in (30 mm)
Mount Slots (MS)	0.3 in (8 mm)
Weight	1.40 lbs
Exit Type	Side
Remote Mounting Distance to Lamp (F32T8)	18 ft
Remote Mounting Wire Gauge	18 AWG
Lead lengths	**Length (± 1 in.)**
Yellow	47.0 in (1194 mm)
White	25.0 in (635mm)
Black	25.0 in (635 mm)
Blue	33.0 in (838 mm)

Specifications by lamp and wattage

Lamp	# of Lamps	Line Volts	System Watts	Nom. Line Current	System Ballast Factor	Ballast Efficacy Factor	Power Factor% (>=)	Crest Factor (<=)	THD% (<=)	Min. Starting Temp (°F/°C)
	1	120	39	0.35 A	1.18	3.03	98	1.7	10	0/-18
F32T8	1	277	39	0.15 A	1.18	3.03	97	1.7	10	0/-18
	1	120	36	0.32 A	1.16	3.22	99	1.7	10	50/10
F32T8/WM	1	277	36	0.14 A	1.16	3.22	96	1.7	10	50/10
	1	120	33	0.29 A	1.16	3.52	99	1.7	10	50/10
F28T8	1	277	33	0.13 A	1.16	3.52	96	1.7	10	50/10
	1	120	31	0.27 A	1.15	3.71	99	1.7	10	50/10
F32T8/25W	1	277	31	0.12 A	1.15	3.71	95	1.7	10	50/10
	1	277	30	0.12 A	1.17	3.90	95	1.7	10	0/-18
F25T8	1	120	30	0.27 A	1.17	3.90	99	1.7	10	0/-18
	1	120	26	0.23 A	1.16	4.46	99	1.7	10	50/10
F25T8/WM	1	277	27	0.10 A	1.16	4.30	94	1.7	10	50/10
	1	120	21	0.19 A	1.19	5.67	99	1.7	10	0/-18
F17T8	1	277	22	0.09 A	1.19	5.41	91	1.7	10	0/-18
	1	120	19	0.17 A	1.18	6.21	99	1.7	10	50/10
F17T8/WM	1	277	19	0.08 A	1.18	6.21	89	1.7	10	50/10
	1	120	17	0.15 A	1.05	6.18	99	1.7	10	0/-18
FE15T8	1	277	18	0.08 A	1.05	5.83	88	1.7	10	0/-18
	1	120	48	0.42 A	1.18	2.46	99	1.7	10	0/-18
F40T8	1	277	47	0.18 A	1.18	2.51	98	1.7	10	0/-18
	1	120	33	0.29 A	1.25	3.79	99	1.7	10	0/-18
F25T12	1	277	33	0.13 A	1.25	3.79	96	1.7	10	0/-18

Safety and performance

UL Type 1 Outdoor UL Type HL FCC – CLASS A Non-Consumer UL Class P ANSI – C62.41 Product is compliant with material restriction requirements of RoHS

cUL Listed UL Listed NRCan NEMA Premium

High Temperature Rated: Suitable for high temperature applications 70C max case temp 5 yr warranty or 90C max case temp 3 yr warranty

See page E-1 for warranty information.

UltraStart® T8 120–277V Programmed Start

T8 Programmed Start Ballasts For F17 (2 ft), F25 (3 ft), F32 (4 ft) Lamps

96714 – GE232-MVPS-N

UltraStart® T8 Programmed Start

2 or 1 – F32T8 120V-277V Normal Light .88 BF <10% THD UltraStart®

- < 10% THD, > 99% power factor
- A new generation of ultra-efficient Programmed Start ballasts (> 90% efficiency)
- Anti-striation circuitry reduces striations with energy saving lamps
- Extends lamp life in frequently switched applications (> 100,000 on/off cycles)
- Multi-voltage technology handles voltage from 120 to 277V
- Light-weight, Slim Profile Mini Can Housing

General characteristics

Ballast Type	Electronic – Programmed/ Rapid Start
Starting Method	Programmed start
Lamp Wiring	Parallel
Line Voltage Regulation (+/-)	10%
Ambient Temperature (MAX)	104°F (40°C)
Case Temperature (MAX)	70°C (158°F)
Ballast Factor	Normal
Power Factor Correction	Active
Sound Rating	A (20-24 decibels)
Additional Info	Anti-striation control, Inherently Thermally Protected, UL Class P, Universal voltage

Electrical characteristics

Supply Current Frequency	50 Hz/Supply Current Frequency (MIN)/ 50 Hz/ 60 (MIN)
Supply Current Frequency (MIN)	50 Hz/60 Hz

Order information

10 Pack	Pallet Pack	DIY Pack	IP Pack
96714			

Dimensions

Wiring diagram	
Case dimensions- Ref Drawing -A – see Page 11-22	
Length (L)	9.5 in (241 mm)
Width (W)	1.3 in (43 mm)
Height (H)	1.18 in (30 mm)
Mounting dimensions	
Mount Length (M)	8.9 in (226 mm)
Mount Width (X or F)	1.18 in (30 mm)
Mount Slots (MS)	0.3 in (8 mm)
Weight	1.65 lbs
Exit Type	Side
Remote Mounting Distance to Lamp (F32T8)	18 ft
Remote Mounting Wire Gauge	18 AWG
Lead lengths	**Length (± 1 in)**
Black	25 in (635 mm)
Blue and Red	33 in (838 mm)
White	25 in (635 mm)
Yellow	47 in (1194 mm)

Specifications by lamp and wattage

Lamp	# of Lamps	Line Volts	System Watts	Nom. Line Current	System Ballast Factor	Ballast Efficacy Factor	Power Factor% (>=)	Crest Factor (<=)	THD% (<=)	Min. Starting Temp (°F/°C)
	2	120	59	0.48 A	0.89	1.50	99	1.7	10	0/-18
	2	277	58	0.21 A	0.89	1.53	96	1.7	10	0/-18
	1	120	37	0.30 A	1.05	2.83	98	1.7	10	0/-18
F32T8	1	277	37	0.14 A	1.05	2.83	93	1.7	10	0/-18
	2	120	55	0.45 A	0.88	1.60	99	1.7	10	50/10
	2	277	54	0.20 A	0.88	1.62	96	1.7	10	50/10
	1	120	34	0.28 A	1.02	3.00	98	1.7	10	50/10
F32T8/WM	1	277	34	0.13 A	1.02	3.00	93	1.7	10	50/10
	2	120	51	0.42 A	0.86	1.68	99	1.7	10	50/10
	2	277	50	0.18 A	0.86	1.72	95	1.7	10	50/10
	1	120	32	0.26 A	1.00	3.12	98	1.7	10	50/10
F28T8	1	277	32	0.12 A	1.00	3.12	92	1.7	10	50/10

Other compatible lamps: F17T8, F25T8, F32T8/25W

Safety and performance

UL Type 1 Outdoor UL Type HL FCC – CLASS A Non-Consumer UL Class P ANSI – C62.41 cUL Listed UL Listed NEMA Premium

Product is compliant with material restriction requirements of RoHS

96720 – GE232-MVPS-L

UltraStart® T8 Programmed Start

2 or 1 – F32T8 120V-277V Low Watts .71 BF <10% THD UltraStart®

- A new generation of ultra-efficient Programmed Start ballasts (> 90% efficiency)
- Anti-striation circuitry reduces striations with energy saving lamps
- Extends lamp life in frequently switched applications (> 100,000 on/off cycles)
- Multi-voltage technology handles voltage from 120 to 277V
- Parallel lamp operation means system maintenance is easier to manage

General characteristics

Ballast Type	Electronic – Programmed / Rapid Start
Starting Method	Programmed start
Lamp Wiring	Parallel
Line Voltage Regulation (+/-)	10%
Ambient Temperature (MAX)	104°F (40°C)
Case Temperature (MAX)	70°C (158°F)
Ballast Factor	Low
Power Factor Correction	Active
Sound Rating	A (20-24 decibels)
Additional Info	Anti-striation control, Inherently Thermally Protected, UL Class P, Universal voltage

Electrical characteristics

Supply Current Frequency (MIN)	50 Hz/60 Hz

Order information

10 Pack	Pallet Pack	DIY Pack	IP Pack
96720			

Dimensions

Wiring diagram – LFL PS2 – see example on page 11-21	
Case dimensions- Ref Drawing -A – see Page 11-22	
Length (L)	9.5 in (241 mm)
Width (W)	1.3 in (43 mm)
Height (H)	1.18 in (30 mm)
Mounting dimensions	
Mount Length (M)	8.9 in (226 mm)
Mount Width (X or F)	1.18 in (30 mm)
Mount Slots (MS)	0.3 in (8 mm)
Weight	1.65 lbs
Exit Type	
Remote Mounting Distance to Lamp (F32T8)	18 ft
Remote Mounting Wire Gauge	18 AWG
Lead lengths	**Length (± 1 in)**
Black	25 in (635 mm)
Blue and Red	33 in (838 mm)
White	25 in (635 mm)
Yellow	47 in (1194 mm)

Specifications by lamp and wattage

Lamp	# of Lamps	Line Volts	System Watts	Nom. Line Current	System Ballast Factor	Ballast Efficacy Factor	Power Factor% (>=)	Crest Factor (<=)	THD% (<=)	Min. Starting Temp (°F/°C)
	2	120	47	0.39 A	0.71	1.51	99	1.7	10	0/-18
	2	277	47	0.17 A	0.71	1.51	95	1.7	10	0/-18
	1	120	30	0.28 A	0.81	2.70	98	1.7	10	0/-18
F32T8	1	277	30	0.11 A	0.81	2.70	90	1.7	10	0/-18
	2	120	44	0.36 A	0.67	1.52	99	1.7	10	60/16
	2	277	44	0.16 A	0.67	1.52	95	1.7	10	60/16
	1	120	28	0.26 A	0.79	2.82	98	1.7	10	60/16
F32T8/WM	1	277	28	0.11 A	0.79	2.82	90	1.7	10	60/16
	2	120	41	0.34 A	0.65	1.58	99	1.7	10	60/16
	2	277	41	0.15 A	0.65	1.58	94	1.7	10	60/16
	1	120	26	0.24 A	0.77	2.96	98	1.7	10	60/16
F28T8	1	277	26	0.10 A	0.77	2.96	90	1.7	10	60/16
	2	277	38	0.14 A	0.73	1.92	94	1.7	16	0/-18
	2	120	37	0.31 A	0.73	1.97	99	1.7	10	0/-18
	1	277	25	0.09 A	0.86	3.44	85	1.7	16	0/-18
F25T8	1	120	24	0.23 A	0.86	3.58	97	1.7	10	0/-18

Other compatible lamps: F17T8, F32T8/25W

Safety and performance

UL Type 1 Outdoor UL Type HL UL Class P cUL Listed UL Listed Product is compliant with material restriction requirements of RoHS NEMA Premium

FCC – CLASS A Non-Consumer ANSI – C62.41

See page E-1 for warranty information.

UltraStart® T8 120–277V Programmed Start

T8 Programmed Start Ballasts For F17 (2 ft), F25 (3 ft), F32 (4 ft) Lamps

29675 – GE-232-MVPS-H

UltraStart® T8 Programmed Start

2 – F32T8 120V-277V High Light 1.15 BF <10% THD UltraStart®

- A new generation of ultra-efficient Programmed Start ballasts (> 90% efficiency)
- Extends lamp life in frequently switched applications (> 100,000 on/off cycles)
- Starting time visually the same as instant start
- Multi-voltage technology handles voltage from 120 to 277V (H and XL series)
- Parallel lamp operation means system maintenance is easier to manage
- Anti-striation circuitry reduces striations with energy saving lamps

General characteristics

Ballast Type	Electronic – Programmed / Rapid Start
Starting Method	Programmed start
Lamp Wiring	Parallel
Line Voltage Regulation (+/-)	10%
Ambient Temperature (MAX)	105°F (41°C)
Case Temperature (MAX)	70°C (158°F)
Ballast Factor	High
Power Factor Correction	Active
Sound Rating	A (20-24 decibels)
Additional Info	Auto-restart, Inherently Thermally Protected, UL Class P

Electrical characteristics

Supply Current Frequency	50 Hz/60 Hz

Order information

10 Pack	Pallet Pack	DIY Pack	IP Pack
29675	29651		

Dimensions

Wiring diagram – LFL PS2 – see example on page 11-21	
Case dimensions – Ref Drawing -A – see Page 11-22	
Length (L)	9.5 in (241 mm)
Width (W)	1.7 in (43 mm)
Height (H)	1.18 in (30 mm)
Mounting dimensions	
Mount Length (M)	8.9 in (226 mm)
Mount Width (X or F)	1.18 in (30 mm)
Mount Slots (MS)	0.3 in (8 mm)
Weight	2.40 lbs
Exit Type	Side
Remote Mounting Distance to Lamp (F32T8)	18 ft
Remote Mounting Wire Gauge	18 AWG
Lead lengths	**Length (± 1 in)**
Blue and Red	33 in (838 mm)
Black	25 in (635 mm)
White	25 in (635 mm)
Yellow	47 in (1194 mm)
Blue	33 in (838 mm)

Specifications by lamp and wattage

Lamp	# of Lamps	Line Volts	System Watts	Nom. Line Current	System Ballast Factor	Ballast Efficacy Factor	Power Factor% (>=)	Crest Factor (<=)	THD% (<=)	Min. Starting Temp (°F/°C)
	2	120	75	0.64 A	1.15	1.53	98	1.7	10	0/-18
	2	277	74	0.28 A	1.15	1.55	94	1.7	10	0/-18
	1	277	47	0.19 A	1.37	2.91	90	1.7	10	0/-18
F32T8	1	120	46	0.40 A	1.37	2.97	98	1.7	10	0/-18
	2	120	69	0.60 A	1.14	1.65	98	1.7	10	60/16
	2	277	69	0.27 A	1.14	1.65	95	1.7	10	60/16
	1	120	43	0.36 A	1.34	3.11	98	1.7	10	60/16
F32T8/WM	1	277	43	0.18 A	1.34	3.11	90	1.7	10	60/16
	2	120	63	0.54 A	1.10	1.74	94	1.7	10	60/16
	2	277	62	0.25 A	1.11	1.79	98	1.7	10	60/16
	1	277	39	0.16 A	1.29	3.30	89	1.7	10	60/16
F28T8	1	120	38	0.32 A	1.29	3.39	98	1.7	10	60/16
	2	120	59	0.50 A	1.14	1.93	98	1.7	10	0/-18
	2	277	59	0.24 A	1.14	1.93	93	1.7	16	0/-18
	1	120	37	0.32 A	1.34	3.62	98	1.7	10	0/-18
F25T8	1	277	37	0.15 A	1.34	3.62	87	1.7	21	0/-18

Other compatible lamps: F17T8, F32T8/25W

Safety and performance

UL Type 1 Outdoor UL Type HL FCC – CLASS A Non-Consumer ANSI – C62.41 FCC – CLASS A Non-Consumer ANSI – C62.41 UL Class P cUL Listed UL Listed

NEMA Premium

High Temperature Rated: Suitable for high temperature applications 70°C max case temp 5 yr warranty or 90°C max case temp 3 yr warranty.

See page E-1 for warranty information.

UltraStart® T8 120–277V Programmed Start

T8 Programmed Start Ballasts For F17 (2 ft), F25 (3 ft), F32 (4 ft) Lamps

29671 – GE-232-MVPS-XL

UltraStart® T8 Programmed Start

2 – F32T8 120V-277V Ultra Low Watt .60 BF <10% THD

- A new generation of ultra-efficient Programmed Start ballasts
- Extends lamp life in frequently switched applications (> 100,000 on/off cycles)
- Starting time visually the same as instant start
- Multi-voltage technology handles voltage from 120 to 277V (H and XL series)
- Parallel lamp operation means system maintenance is easier to manage
- Anti-striation circuitry reduces striations with energy saving lamps

General characteristics

Ballast Type	Electronic – Programmed / Rapid Start
Starting Method	Programmed start
Lamp Wiring	Parallel
Line Voltage Regulation (+/-)	10%
Ambient Temperature (MAX)	105°F (41°C)
Case Temperature (MAX)	70°C (158°F)
Ballast Factor	Ultra low
Power Factor Correction	Active
Sound Rating	A (20-24 decibels)
Additional Info	Auto-restart, Inherently Thermally Protected, UL Class P

Electrical characteristics

Supply Current Frequency	50 Hz/ 60 Hz

Order information

10 Pack	Pallet Pack	DIY Pack	IP Pack
29671			

Dimensions

Wiring diagram – LFL PS2 – see example on page 11-21	
Case dimensions – Ref Drawing -A – see Page 11-22	
Length (L)	9.5 in (241 mm)
Width (W)	1.7 in (43 mm)
Height (H)	1.18 in (30 mm)
Mounting dimensions	
Mount Length (M)	8.9 in (226 mm)
Mount Width (X or F)	1.18 in (30 mm)
Mount Slots (MS)	0.3 in (8 mm)
Weight	1.65 lbs
Exit Type	Side
Remote Mounting Distance to Lamp (F32T8)	18 ft
Remote Mounting Wire Gauge	18 AWG
Lead lengths	**Length (± 1 in)**
Blue and Red	33 in (838 mm)
White and Black	25 in (635 mm)
Yellow	47 in (1194 mm)

Specifications by lamp and wattage

Lamp	# of Lamps	Line Volts	System Watts	Nom. Line Current	System Ballast Factor	Ballast Efficacy Factor	Power Factor% (>=)	Crest Factor (<=)	THD% (<=)	Min. Starting Temp (°F/°C)
	2	120	45	0.39 A	0.60	1.33	98.0	1.7	10	0/-18
	2	277	44	0.19 A	0.60	1.36	90.0	1.7	10	0/-18
	1	277	28	0.12 A	0.70	2.50	83.0	1.7	10	0/-18
F32T8	1	120	27	0.24 A	0.70	2.59	98.0	1.7	10	0/-18
	2	120	42	0.15 A	0.59	1.40	99.0	1.7	10	60/16
	2	277	42	0.24 A	0.59	1.40	87.0	1.7	10	60/16
	1	120	27	0.22 A	0.68	2.51	0.9	1.7	10	60/16
F32T8/WM	1	277	27	0.20 A	0.68	2.51	81.0	1.7	10	60/16
	2	120	39	0.12 A	0.59	1.51	99.0	1.7	10	60/16
	2	277	39	0.15 A	0.59	1.51	86.0	1.7	10	60/16
	1	277	25	0.12 A	0.67	2.68	79.0	1.7	10	60/16
F28T8	1	120	24	0.20 A	0.67	2.68	98.0	1.7	10	60/16
	2	120	36	0.31 A	0.61	1.69	98.0	1.7	10	0/-18
	2	277	36	0.15 A	0.61	1.69	87.0	1.7	15	0/-18
	1	277	23	0.10 A	0.68	2.95	79.0	1.7	16	0/-18
F25T8	1	120	22	0.20 A	0.68	3.09	98.0	1.7	10	0/-18

Other compatible lamps: F17T8, F32T8/25W

Safety and performance

Product is compliant with material restriction requirements of RoHS UL Type 1 Outdoor ANSI – C62.41 UL Type HL NRCan FCC Part 18 Class B at 120 Volts UL Class P cUL Listed UL Listed

See page E-1 for warranty information.

UltraStart® T8 120–277V Programmed Start

T8 Programmed Start Ballasts For F17 (2 ft), F25 (3 ft), F32 (4 ft) Lamps

29676 – GE-332-MVPS-H

UltraStart® T8 Programmed Start

3 – F32T8 120V-277V High Light 1.15 BF <10% THD UltraStart®

- A new generation of ultra-efficient Programmed Start ballasts (> 90% efficiency)
- Extends lamp life in frequently switched applications (> 100,000 on/off cycles)
- Starting time visually the same as instant start
- Multi-voltage technology handles voltage from 120 to 277V (H and XL series)
- Parallel lamp operation means system maintenance is easier to manage
- Anti-striation circuitry reduces striations with energy saving lamps

General characteristics

Ballast Type	Electronic – Programmed / Rapid Start
Starting Method	Programmed start
Lamp Wiring	Parallel
Line Voltage Regulation (+/-)	10%
Ambient Temperature (MAX)	105°F (41°C)
Case Temperature (MAX)	70°C (158°F)
Ballast Factor	High
Power Factor Correction	Active
Sound Rating	A (20-24 decibels)
Additional Info	Auto-restart, Inherently Thermally Protected, UL Class P

Electrical characteristics

Supply Current Frequency	50 Hz/60 Hz

Order information

10 Pack	Pallet Pack	DIY Pack	IP Pack
29676			

Dimensions

Wiring diagram – LFL PS3 – see example on page 11-21	
Case dimensions – Ref Drawing -A – see Page 11-22	
Length (L)	9.5 in (241 mm)
Width (W)	1.7 in (43 mm)
Height (H)	1.18 in (30 mm)
Mounting dimensions	
Mount Length (M)	8.9 in (226 mm)
Mount Width (X or F)	1.18 in (30 mm)
Mount Slots (MS)	0.3 in (8 mm)
Weight	2.40 lbs
Exit Type	Side
Remote Mounting Distance to Lamp (F32T8)	18 ft
Remote Mounting Wire Gauge	18 AWG
Lead lengths	**Length (± 1 in)**
White and Black	25 in (635 mm)
Blue and Red	33 in (838 mm)
Red/White	33 in (838 mm)
Yellow	47 in (1194 mm)

Specifications by lamp and wattage

Lamp	# of Lamps	Line Volts	System Watts	Nom. Line Current	System Ballast Factor	Ballast Efficacy Factor	Power Factor% (>=)	Crest Factor (<=)	THD% (<=)	Min. Starting Temp (°F/°C)
	3	120	110	0.95 A	1.15	1.04	98	1.7	10	0/-18
	3	277	108	0.41 A	1.15	1.06	96	1.7	10	0/-18
	2	120	82	0.70 A	1.28	1.56	98	1.7	10	0/-18
F32T8	2	277	82	0.32 A	1.28	1.56	94	1.7	10	0/-18
	3	120	102	0.88 A	1.13	1.10	99	1.7	10	60/16
	3	277	100	0.39 A	1.14	1.14	96	1.7	10	60/16
	2	120	77	0.64 A	1.26	1.63	98	1.7	10	60/16
F32T8/WM	2	277	76	0.30 A	1.26	1.65	95	1.7	10	60/16
	3	120	92	0.79 A	1.09	1.18	99	1.7	10	60/16
	3	277	91	0.35 A	1.10	1.20	96	1.7	10	60/16
	2	277	69	0.27 A	1.23	1.78	94	1.7	10	60/16
F28T8	2	120	68	0.58 A	1.23	1.81	98	1.7	10	60/16
	3	120	86	0.74 A	1.14	1.32	98	1.7	10	0/-18
	3	277	85	0.33 A	1.14	1.34	96	1.7	14	0/-18
	2	120	65	0.56 A	1.25	1.92	98	1.7	10	0/-18
F25T8	2	277	64	0.26 A			93	1.7	16	0/-18

Other compatible lamps: F17T8, F32T8/25W

Safety and performance

UL Type 1 Outdoor UL Type HL Product is compliant with material restriction requirements of RoHS FCC – CLASS A Non-Consumer ANSI – C62.41 UL Class P cUL Listed UL Listed NEMA Premium

High Temperature Rated: Suitable for high temperature applications 70°C max case temp 5 yr warranty or 90°C max case temp 3 yr warranty.

See page E-1 for warranty information.

UltraStart® T8 120–277V Programmed Start

T8 Programmed Start Ballasts For F17 (2 ft), F25 (3 ft), F32 (4 ft) Lamps

96715 – GE332-MVPS-N

UltraStart® T8 Programmed Start

3 – F32T8 120V-277V Normal Light .88 BF <10% THD UltraStart®

- A new generation of ultra-efficient Programmed Start ballasts (> 90% efficiency)
- Anti-striation circuitry reduces striations with energy saving lamps
- Extends lamp life in frequently switched applications (> 100,000 on/off cycles)
- Parallel lamp operation means system maintenance is easier to manage
- Starting time visually the same as instant start

General characteristics

Ballast Type	Electronic – Programmed / Rapid Start
Starting Method	Programmed start
Lamp Wiring	Parallel
Line Voltage Regulation (+/-)	10%
Ambient Temperature (MAX)	104°F (40°C)
Case Temperature (MAX)	70°C (158°F)
Ballast Factor	Normal
Power Factor Correction	Active
Sound Rating	A (20-24 decibels)
Additional Info	Anti-striation control, TCLP compliant, Inherently Thermally Protected, UL Class P, Universal voltage

Electrical characteristics

Supply Current Frequency (MIN)	50 Hz/60 Hz

Order information

10 Pack	Pallet Pack	DIY Pack	IP Pack
96715			

Dimensions

Wiring diagram – LFL PS3 – see example on page 11-21	
Case dimensions – Ref Drawing -A – see Page 11-22	
Length (L)	9.5 in (241 mm)
Width (W)	1.7 in (43 mm)
Height (H)	1.18 in (30 mm)
Mounting dimensions	
Mount Length (M)	8.9 in (226 mm)
Mount Width (X or F)	1.18 in (30 mm)
Mount Slots (MS)	0.3 in (8 mm)
Weight	1.65 lbs
Exit Type	Side
Remote Mounting Distance to Lamp (F32T8)	18 ft
Remote Mounting Wire Gauge	18 AWG
Lead lengths	**Length (± 1 in)**
White and Black	25 in (635 mm)
Blue and Red	33 in (838 mm)
Red/White	33 in (838 mm)
Yellow	47 in (1194 mm)

Specifications by lamp and wattage

Lamp	# of Lamps	Line Volts	System Watts	Nom. Line Current	System Ballast Factor	Ballast Efficacy Factor	Power Factor% (>=)	Crest Factor (<=)	THD% (<=)	Min. Starting Temp (°F/°C)
	3	120	86	0.72 A	0.89	1.03	99	1.7	10	0/-18
	3	277	84	0.30 A	0.89	1.05	97	1.7	10	0/-18
	2	120	66	0.54 A	0.98	1.48	98	1.7	10	0/-18
F32T8	2	277	65	0.24 A	0.98	1.50	95	1.7	10	0/-18
	3	120	80	0.66 A	0.86	1.07	99	1.7	10	60/16
	3	277	79	0.28 A	0.86	1.08	97	1.7	10	60/16
	2	120	61	0.51 A	0.96	1.57	98	1.7	10	60/16
F32T8/WM	2	277	61	0.22 A	0.96	1.57	95	1.7	10	60/16
	3	120	73	0.61 A	0.84	1.15	99	1.7	10	60/16
	3	277	72	0.26 A	0.84	1.16	97	1.7	10	60/16
	2	120	57	0.47 A	0.93	1.63	98	1.7	10	60/16
F28T8	2	277	57	0.21 A	0.93	1.63	95	1.7	10	60/16

Other compatible lamps: F17T8, F25T8, F32T8/25W

Safety and performance

Product is compliant with material restriction requirements of RoHS UL Type 1 Outdoor ANSI – C62.41 UL Type HL FCC – CLASS A Non-Consumer UL Class P UL Listed NEMA Premium

96721 – GE332-MVPS-L

UltraStart® T8 Programmed Start

3 – F32T8 120V-277V Low Watts .71 BF <10% THD UltraStart®

- A new generation of ultra-efficient Programmed Start ballasts (> 90% efficiency)
- Anti-striation circuitry reduces striations with energy saving lamps
- Extends lamp life in frequently switched applications (> 100,000 on/off cycles)
- Multi-voltage technology handles voltage from 120 to 277V
- Parallel lamp operation means system maintenance is easier to manage

General characteristics

Ballast Type	Electronic – Programmed / Rapid Start
Starting Method	Programmed start
Lamp Wiring	Parallel
Line Voltage Regulation (+/-)	10%
Ambient Temperature (MAX)	104°F (40°C)
Case Temperature (MAX)	70°C (158°F)
Ballast Factor	Low
Power Factor Correction	Active
Sound Rating	A (20-24 decibels)
Additional Info	Anti-striation control, Inherently Thermally Protected, UL Class P, Universal voltage

Electrical characteristics

Supply Current Frequency (MIN)	50 Hz/60 Hz

Order information

10 Pack	Pallet Pack	DIY Pack	IP Pack
96721			

Dimensions

Wiring diagram – LFL PS3 – see example on page 11-21	
Case dimensions – Ref Drawing -A – see Page 11-22	
Length (L)	9.5 in (241 mm)
Width (W)	1.7 in (43 mm)
Height (H)	1.18 in (30 mm)
Mounting dimensions	
Mount Length (M)	8.9 in (226 mm)
Mount Width (X or F)	1.18 in (30 mm)
Mount Slots (MS)	0.3 in (8 mm)
Weight	1.65 lbs
Exit Type	Side
Remote Mounting Distance to Lamp (F32T8)	18 ft
Remote Mounting Wire Gauge	18 AWG
Lead lengths	**Length (± 1 in)**
White and Black	25 in (635 mm)
Blue and Red	33 in (838 mm)
Red/White	33 in (838 mm)
Yellow	47 in (1194 mm)

Specifications by lamp and wattage

Lamp	# of Lamps	Line Volts	System Watts	Nom. Line Current	System Ballast Factor	Ballast Efficacy Factor	Power Factor% (>=)	Crest Factor (<=)	THD% (<=)	Min. Starting Temp (°F/°C)
	3	120	69	0.60 A	0.71	1.02	99	1.7	10	0/-18
	3	277	68	0.26 A	0.71	1.04	96	1.7	10	0/-18
	2	120	52	0.45 A	0.77	1.48	98	1.7	10	0/-18
F32T8	2	277	52	0.19 A	0.77	1.48	92	1.7	10	0/-18
	3	120	63	0.54 A	0.67	1.06	99	1.7	10	60/16
	3	277	62	0.24 A	0.67	1.08	95	1.7	10	60/16
	2	120	48	0.40 A	0.75	1.56	98	1.7	10	60/16
F32T8/WM	2	277	48	0.18 A	0.75	1.56	92	1.7	10	60/16
	3	120	58	0.49 A	0.66	1.13	99	1.7	10	60/16
	3	277	58	0.22 A	0.66	1.13	95	1.7	10	60/16
	2	120	45	0.38 A	0.74	1.64	98	1.7	10	60/16
F28T8	2	277	45	0.17 A	0.74	1.64	92	1.7	10	60/16
	3	277	58	0.22 A	0.66	1.13	95	1.7	15	0/-18
	3	120	54	0.45 A	0.74	1.37	99	1.7	10	0/-18
	2	120	41	0.35 A	0.82	2.00	98	1.7	10	0/-18
F25T8	2	277	0.158	90.0 A	0.82	2.00	0.82	1.7	15	0/-18

Other compatible lamps: F17T8, F32T8/25W

Safety and performance

UL Type 1 Outdoor UL Type HL Product is compliant with material restriction requirements of RoHS FCC – CLASS A Non-Consumer UL Class P ANSI – C62.41

See page E-1 for warranty information. cUL Listed UL Listed NEMA Premium

UltraStart® T8 120–277V Programmed Start

T8 Programmed Start Ballasts For F17 (2 ft), F25 (3 ft), F32 (4 ft) Lamps

29672 – GE-332-MVPS-XL

UltraStart® T8 Programmed Start

3 – F32T8 120V-277V Ultra Low Watt .60 BF <10% THD

- A new generation of ultra-efficient Programmed Start ballasts (> 90% efficiency)
- Extends lamp life in frequently switched applications (> 100,000 on/off cycles)
- Starting time visually the same as instant start
- Multi-voltage technology handles voltage from 120 to 277V (H and XL series)
- Parallel lamp operation means system maintenance is easier to manage
- Anti-striation circuitry reduces striations with energy saving lamps

General characteristics

Ballast Type	Electronic – Programmed / Rapid Start
Starting Method	Programmed start
Lamp Wiring	Parallel
Line Voltage Regulation (+/-)	10%
Ambient Temperature (MAX)	105°F (41°C)
Case Temperature (MAX)	70°C (158°F)
Ballast Factor	Ultra low
Power Factor Correction	Active
Sound Rating	A (20-24 decibels)
Additional Info	Auto-restart, Inherently Thermally Protected, UL Class P

Electrical characteristics

Supply Current Frequency	50 Hz/60 Hz

Order information

10 Pack	Pallet Pack	DIY Pack	IP Pack
29672			

Dimensions

Wiring diagram – LFL PS3 – see example on page 11-21	
Case dimensions – Ref Drawing -A – see Page 11-22	
Length (L)	9.5 in (241 mm)
Width (W)	1.7 in (43 mm)
Height (H)	1.18 in (30 mm)
Mounting dimensions	
Mount Length (M)	8.9 in (226 mm)
Mount Width (X or F)	1.18 in (30 mm)
Mount Slots (MS)	0.3 in (8 mm)
Weight	1.65 lbs
Exit Type	Side
Remote Mounting Distance to Lamp (F32T8)	18 ft
Remote Mounting Wire Gauge	18 AWG
Lead lengths	**Length (± 1 in)**
White and Black	25 in (635 mm)
Blue and Red	33 in (838 mm)
Red/White	33 in (838 mm)
Yellow	47 in (1194 mm)

Specifications by lamp and wattage

Lamp	# of Lamps	Line Volts	System Watts	Nom. Line Current	System Ballast Factor	Ballast Efficacy Factor	Power Factor% (>=)	Crest Factor (<=)	THD% (<=)	Min. Starting Temp (°F/°C)
	3	120	67	0.58 A	0.60	0.89	98	1.7	10	0/-18
	3	277	66	0.26 A	0.60	0.90	93	1.7	10	0/-18
	2	277	50	0.21 A	0.64	1.28	92	1.7	10	0/-18
F32T8	2	120	49	0.42 A	0.64	1.30	98	1.7	10	0/-18
	3	120	61	0.53 A	0.59	0.96	99	1.7	10	60/16
	3	277	60	0.24 A	0.59	0.98	94	1.7	10	60/16
	2	120	45	0.04 A	0.64	1.42	98	1.7	10	60/16
F32T8/WM	2	277	45	0.18 A	0.64	1.42	92	1.7	10	60/16
	3	120	57	0.49 A	0.58	1.01	99	1.7	10	60/16
	3	277	56	0.22 A	0.58	1.03	94	1.7	10	60/16
	2	120	42	0.35 A	0.63	1.50	98	1.7	10	60/16
F28T8	2	277	42	0.17 A	0.63	1.50	91	1.7	10	60/16
	3	120	53	0.45 A	0.60	1.13	98	1.7	10	0/-18
	3	277	53	0.21 A	0.60	1.13	92	1.7	13	0/-18
	2	120	40	0.35 A	0.64	1.60	98	1.7	10	0/-18
F25T8	2	277	40	0.16 A	0.64	1.60	89	1.7	14	0/-18

Other compatible lamps: F17T8, F32T8/25W

Safety and performance

UL Type 1 Outdoor UL Type HL Product is compliant with material restriction requirements of RoHS FCC – CLASS A Non-Consumer UL Class P UL Listed ANSI – C62.41 cUL Listed

29625 – GE-432-120-PS-N

UltraStart® T8 Programmed Start

4 – F32T8 120V Normal Light .87 BF <10% THD UltraStart®

- A new generation of ultra-efficient Programmed Start ballasts (> 90% efficiency)
- Extends lamp life in frequently switched applications (> 100,000 on/off cycles)
- Starting time visually the same as instant start
- Multi-voltage technology handles voltage from 120 to 277V (H and XL series)
- Parallel lamp operation means system maintenance is easier to manage

General characteristics

Ballast Type	Electronic – Programmed / Rapid Start
Starting Method	Programmed start
Lamp Wiring	Parallel
Line Voltage Regulation (+/-)	10%
Ambient Temperature (MAX)	105°F (41°C)
Case Temperature (MAX)	70°C (158°F)
Ballast Factor	Normal
Power Factor Correction	Active
Sound Rating	A (20-24 decibels)
Additional Info	Auto-restart, Inherently Thermally Protected, UL Class P

Electrical characteristics

Supply Current Frequency	50 Hz/60 Hz

Order information

10 Pack	Pallet Pack	DIY Pack	IP Pack
29625	29635		

Dimensions

Wiring diagram – LFL PS4 – see example on page 11-21	
Case dimensions – Ref Drawing -A – see Page 11-22	
Length (L)	9.5 in (241 mm)
Width (W)	1.7 in (43 mm)
Height (H)	1.18 in (30 mm)
Mounting dimensions	
Mount Length (M)	8.9 in (226 mm)
Mount Width (X or F)	1.18 in (30 mm)
Mount Slots (MS)	0.3 in (8 mm)
Weight	1.65 lbs
Exit Type	Side
Remote Mounting Distance to Lamp (F32T8)	18 ft
Remote Mounting Wire Gauge	18 AWG
Lead lengths	**Length (± 1 in)**
White and Black	25 in (635 mm)
Blue and Red	33 in (838 mm)
Blue/White	33 in (838 mm)
Red/White	33 in (838 mm)
Yellow	47 in (1194 mm)

Specifications by lamp and wattage

Lamp	# of Lamps	Line Volts	System Watts	Nom. Line Current	System Ballast Factor	Ballast Efficacy Factor	Power Factor% (>=)	Crest Factor (<=)	THD% (<=)	Min. Starting Temp (°F/°C)
	4	120	112	0.95 A	0.89	0.79	99	1.7	10	0/-18
F32T8	3	120	92	0.79 A	0.96	1.04	99	1.7	10	0/-18
	4	120	106	0.92 A	0.87	0.82	99	1.7	10	60/16
F32T8/WM	3	120	87	0.75 A	0.94	1.08	99	1.7	10	60/16
	4	120	96	0.83 A	0.84	0.87	99	1.7	10	60/16
F28T8	3	120	79	0.68 A	0.91	1.15	99	1.7	10	60/16
	4	120	87	0.75 A	0.88	1.01	99	1.7	10	0/-18
F25T8	3	120	73	0.63 A	0.95	1.30	99	1.7	10	0/-18
	4	120	61	0.53 A	0.89	1.45	99	1.7	10	50/10
F17T8	3	120	51	0.44 A	0.96	1.88	99	1.7	10	0/-18

Other compatible lamps: F32T8/25W

Safety and performance

Product is compliant with material restriction requirements of RoHS UL Type 1 Outdoor UL Type HL ANSI – C62.41 FCC – CLASS A Non-Consumer NEMA Premium UL Class P cUL Listed UL Listed

See page E-1 for warranty information.

UltraStart® T8 120–277V Programmed Start

T8 Programmed Start Ballasts For F17 (2 ft), F25 (3 ft), F32 (4 ft) Lamps

96716 – GE432-MVPS-N

UltraStart® T8 Programmed Start

4 F32T8 120V-277V Normal Light .88 BF <10% THD UltraStart®

- A new generation of ultra-efficient Programmed Start ballasts (> 90% efficiency)
- Anti-striation circuitry reduces striations with energy saving lamps
- Extends lamp life in frequently switched applications (> 100,000 on/off cycles)
- Multi-voltage technology handles voltage from 120 to 277V
- Parallel lamp operation means system maintenance is easier to manage

General characteristics

Ballast Type	Electronic – Programmed / Rapid Start
Starting Method	Rapid start
Lamp Wiring	Parallel
Line Voltage Regulation (+/-)	10%
Ambient Temperature (MAX)	104°F (40°C)
Case Temperature (MAX)	70°C (158°F)
Ballast Factor	Normal
Power Factor Correction	Active
Sound Rating	A (20-24 decibels)
Additional Info	Inherently Thermally Protected, UL Class P, Universal voltage

Electrical characteristics

Supply Current Frequency (MIN)	50 Hz/ 60 Hz

Order information

10 Pack	Pallet Pack	DIY Pack	IP Pack
96716			

Dimensions

Wiring diagram – LFL PS4 – see example on page 11-21	
Case dimensions – Ref Drawing -A – see Page 11-22	
Length (L)	9.5 in (241 mm)
Width (W)	1.7 in (43 mm)
Height (H)	1.18 in (30 mm)
Mounting dimensions	
Mount Length (M)	8.9 in (226 mm)
Mount Width (X or F)	1.18 in (30 mm)
Mount Slots (MS)	0.3 in (8 mm)
Weight	1.65 lbs
Exit Type	Side
Remote Mounting Distance to Lamp (F32T8)	18 ft
Remote Mounting Wire Gauge	18 AWG
Lead lengths	**Length (± 1 in)**
White and Black	25 in (635 mm)
Blue and Red	33 in (838 mm)
Blue/White	33 in (838 mm)
Red/White	33 in (838 mm)
Yellow	47 in (1194 mm)

Specifications by lamp and wattage

Lamp	# of Lamps	Line Volts	System Watts	Nom. Line Current	System Ballast Factor	Ballast Efficacy Factor	Power Factor% (>=)	Crest Factor (<=)	THD% (<=)	Min. Starting Temp (°F/°C)
	4	120	114	0.97 A	0.89	0.78	99	1.7	10	0/-18
	4	277	112	0.41 A	0.89	0.79	97	1.7	10	0/-18
	3	120	93	0.78 A	0.96	1.03	98	1.7	10	0/-18
F32T8	3	277	92	0.34 A	0.96	1.04	95	1.7	10	0/-18
	4	120	105	0.88 A	0.86	0.81	99	1.7	10	60/16
	4	277	103	0.37 A	0.86	0.83	97	1.7	10	60/16
	3	120	86	0.72 A	0.94	1.09	98	1.7	10	60/16
F32T8/WM	3	277	85	0.31 A	0.94	1.10	95	1.7	10	60/16
	4	120	96	0.81 A	0.83	0.86	99	1.7	10	60/16
	4	277	95	0.35 A	0.83	0.87	97	1.7	10	60/16
	3	120	79	0.66 A	0.92	1.16	98	1.7	10	60/16
F28T8	3	277	78	0.29 A	0.92	1.17	95	1.7	10	60/16

Other compatible lamps: F17T8, F25T8, F32T8/25W

Safety and performance

Product is compliant with material restriction requirements of RoHS UL Type 1 Outdoor UL Type HL ANSI – C62.41 FCC – CLASS A Non-Consumer UL Class P UL Listed NEMA Premium

71832 – GE432-MVPS-L

UltraStart® T8 Programmed Start

4 – F32T8 120V-277V Low Watts .71 BF <10% THD UltraStart®

- A new generation of ultra-efficient Programmed Start ballasts (> 90% efficiency)
- Anti-striation circuitry reduces striations with energy saving lamps
- Extends lamp life in frequently switched applications (> 100,000 on/off cycles)
- Multi-voltage technology handles voltage from 120 to 277V
- Parallel lamp operation means system maintenance is easier to manage

General characteristics

Ballast Type	Electronic – Programmed / Rapid Start
Starting Method	Programmed start
Lamp Wiring	Parallel
Line Voltage Regulation (+/-)	10%
Ambient Temperature (MAX)	104°F (40°C)
Case Temperature (MAX)	70°C (158°F)
Ballast Factor	Low – PS
Power Factor Correction	Active
Sound Rating	A (20-24 decibels)
Additional Info	Inherently Thermally Protected, UL Class P, Universal voltage

Electrical characteristics

Supply Current Frequency	50 Hz
Supply Current Frequency (MIN)	50 Hz/60 Hz

Order information

10 Pack	Pallet Pack	DIY Pack	IP Pack
71832			

Dimensions

Wiring diagram – LFL PS4 – see example on page 11-21	
Case dimensions – Ref Drawing -A – see Page 11-22	
Length (L)	9.5 in (241 mm)
Width (W)	1.7 in (43 mm)
Height (H)	1.18 in (30 mm)
Mounting dimensions	
Mount Length (M)	8.9 in (226 mm)
Mount Width (X or F)	1.18 in (30 mm)
Mount Slots (MS)	0.3 in (8 mm)
Weight	1.65 lbs
Exit Type	Side
Remote Mounting Distance to Lamp (F32T8)	18 ft
Remote Mounting Wire Gauge	18 AWG
Lead lengths	**Length (± 1 in)**
White and Black	25 in (635 mm)
Blue and Red	33 in (838 mm)
Blue/White	33 in (838 mm)
Red/White	33 in (838 mm)
Yellow	47 in (1194 mm)

Specifications by lamp and wattage

Lamp	# of Lamps	Line Volts	System Watts	Nom. Line Current	System Ballast Factor	Ballast Efficacy Factor	Power Factor% (>=)	Crest Factor (<=)	THD% (<=)	Min. Starting Temp (°F/°C)
	4	120	90	0.39 A	0.71	0.78	1	1.7	10	0/-18
	4	277	88	0.32 A	0.71	0.80	1	1.7	10	0/-18
	3	120	72	0.68 A	0.58	0.81	1	1.7	10	0/-18
F32T8	3	277	71	0.78 A	0.58	0.82	1	1.7	10	0/-18
	4	120	85	0.71 A	0.69	0.81	1	1.7	10	60/16
	4	277	83	0.30 A	0.69	0.83	1	1.7	10	60/16
	3	120	68	0.58 A	0.57	0.84	1	1.7	10	60/16
F32T8/WM	3	277	67	0.26 A	0.57	0.85	1	1.7	10	60/16
	4	120	77	0.64 A	0.68	0.88	1	1.7	10	60/16
	4	277	76	0.28 A	0.68	0.89	1	1.7	10	60/16
	3	120	63	0.53 A	0.55	0.88	1	1.7	10	60/16
F28T8	3	277	63	0.23 A	0.55	0.88	1	1.7	10	60/16

Other compatible lamps: F17T8, F25T8, F32T8/25W

Safety and performance

Product is compliant with material restriction requirements of RoHS UL Type 1 Outdoor ANSI – C62.41 UL Type HL FCC – CLASS A Non-Consumer UL Class P UL Listed NEMA Premium

See page E-1 for warranty information.

UltraStart® T8 120–277V Programmed Start

T8 Programmed Start Ballasts For F17 (2 ft), F25 (3 ft), F32 (4 ft) Lamps

74476 – GE-432-MVPS-H (replaces 29678)

UltraStart® T8 Programmed Start

4 – F32T8 120V-277V High Light 1.15 BF <10% THD UltraStart®

- A new generation of ultra-efficient Programmed Start ballasts (> 90% efficiency)
- Extends lamp life in frequently switched applications (> 100,000 on/off cycles)
- Starting time visually the same as instant start
- Multi-voltage technology handles voltage from 120 to 277V
- Parallel lamp operation means system maintenance is easier to manage
- Anti-striation circuitry reduces striations with energy saving lamps

General characteristics

Ballast Type	Electronic – Programmed / Rapid Start
Starting Method	Programmed start
Lamp Wiring	Parallel
Line Voltage Regulation (+/-)	10%
Ambient Temperature (MAX)	105°F (41°C)
Case Temperature (MAX)	70°C (158°F)
Ballast Factor	High
Power Factor Correction	Active
Sound Rating	A (20-24 decibels)
Additional Info	Auto-restart, Inherently Thermally Protected, UL Class P

Electrical characteristics

Supply Current Frequency	50 Hz/60 Hz

Order information

10 Pack	Pallet Pack	DIY Pack	IP Pack
74476	74477 (replaces 29657)		

Dimensions

Wiring diagram – LFL PS4 – see example on page 11-21	
Case dimensions – Ref Drawing LG – see Page 11-22	
Length (L)	9.5 in (241 mm)
Width (W)	2.4 in (61 mm)
Height (H)	1.6 in (40 mm)
Mounting dimensions	
Mount Length (M)	8.9 in (226 mm)
Mount Width (X or F)	1.7 in (43 mm)
Mount Slots (MS)	0.3 in (8 mm)
Weight	3.10 lbs
Exit Type	Side
Remote Mounting Distance to Lamp (F32T8)	18 ft
Remote Mounting Wire Gauge	18 AWG
Lead lengths	**Length (± 1 in)**
White	25 in (635 mm)
Black	25 in (635 mm)
Red	33 in (838 mm)
Red/White	33 in (838 mm)
Blue	33 in (838 mm)
Blue/White	33 in (838 mm)
Yellow	47 in (1194 mm)

Specifications by lamp and wattage

Lamp	# of Lamps	Line Volts	System Watts	Nom. Line Current	System Ballast Factor	Ballast Efficacy Factor	Power Factor% (>=)	Crest Factor (<=)	THD% (<=)	Min. Starting Temp (°F/°C)
	4	120	147	1.27 A	1.16	0.79	99	1.7	10	0/-18
	4	277	144	0.55 A	1.16	0.81	99	1.7	10	0/-18
	3	120	120	1.03 A	1.26	1.05	99	1.7	10	0/-18
F32T8	3	277	120	0.45 A	1.26	1.05	99	1.7	10	0/-18
	4	120	139	1.20 A	1.15	0.83	99	1.7	10	50/10
	4	277	136	0.52 A	1.15	0.85	99	1.7	10	50/10
	3	120	114	0.95 A	1.24	1.08	99	1.7	10	50/10
F32T8/WM	3	277	112	0.43 A	1.24	1.11	99	1.7	10	50/10
	4	120	125	1.08 A	1.12	0.90	99	1.7	10	50/10
	4	277	123	0.47 A	1.12	0.91	99	1.7	10	50/10
	3	120	103	0.86 A	1.21	1.17	99	1.7	10	50/10
F28T8	3	277	101	0.39 A	1.21	1.20	99	1.7	10	50/10
	4	120	112	0.94 A	1.12	1.00	99	1.7	10	50/10
	4	277	111	0.42 A	1.12	1.01	99	1.7	10	50/10
	3	120	92	0.79 A	1.21	1.32	99	1.7	10	50/10
F32T8/25W	3	277	91	0.35 A	1.21	1.33	99	1.7	10	50/10
	4	120	117	1.00 A	1.15	0.98	99	1.7	10	0/-18
	4	277	115	0.44 A	1.15	1.00	99	1.7	10	0/-18
	3	120	97	0.83 A	1.23	1.27	99	1.7	10	0/-18
F25T8	3	277	96	0.37 A	1.23	1.28	99	1.7	10	0/-18
	4	120	81	0.69 A	1.15	1.42	99	1.7	10	0/-18
	4	277	80	0.31 A	1.15	1.44	98	1.7	10	0/-18
	3	120	67	0.58 A	1.23	1.84	99	1.7	10	0/-18
F17T8	3	277	67	0.26 A	1.23	1.84	99	1.7	10	0/-18

Safety and performance

Product is compliant with material restriction requirements of RoHS ANSI – C62.41 UL Type 1 Outdoor UL Type HL FCC – CLASS A Non-Consumer UL Class P

cUL Listed UL Listed NEMA Premium

High Temperature Rated: Suitable for high temperature applications 70°C max case temp 5 yr warranty or 90°C max case temp 3 yr warranty.

See page E-1 for warranty information.

UltraStart® T8 120–277V Programmed Start

T8 Programmed Start Ballasts For F17 (2 ft), F25 (3 ft), F32 (4 ft) Lamps

62721 - GE232PS347-L

UltraStart® T8 Programmed Start

2 or 1 F32T8 347V Low Watt .71 BF UltraStart®

- A new generation of ultra-efficient Programmed Start ballasts (> 90% efficiency)
- Extends lamp life in frequently switched applications (> 100,000 on/off cycles)
- Starting time visually the same as instant start
- Parallel lamp operation means system maintenance is easier to manage
- Anti-striation circuitry reduces striations with energy saving lamps
- < 10% THD, > 99% power factor

General characteristics

Ballast Type	Electronic – Program / Rapid Start
Starting Method	Programmed start
Lamp Wiring	Parallel
Line Voltage Regulation (+/-)	10%
Ambient Temperature (MAX)	
Case Temperature (MAX)	70°C (158°F)
Ballast Factor	Low-PS (.71)
Power Factor Correction	Active
Sound Rating	A (20-24 decibels)
Additional Info	Anti-striation control, Thermally protected, Universal voltage, TCLP compliant, Auto-restart

Electrical characteristics

Supply Current Frequency	60 Hz
Supply Current Frequency (MIN)	50 Hz/60 Hz

Order information

10 Pack	Pallet Pack	DIY Pack	IP Pack
62721			

Dimensions

Wiring diagram – LFL PS2 – see example on page 11-21	
Case dimensions – Ref Drawing -A – see page 11-22	
Length (L)	9.5 in (241 mm)
Width (W)	1.7 in (43 mm)
Height (H)	1.2 in (30 mm)
Mounting dimensions	
Mount Length (M)	8.9 in (226 mm)
Mount Width (X or F)	1.1 in (29 mm)
Mount Slots (MS)	0.3 in (8 mm)
Weight	1.65 lbs
Exit Type	Side
Remote Mounting Distance to Lamp (F32T8)	18 ft
Remote Mounting Wire Gauge	18 AWG
Lead lengths	**Length (± 1 in)**
Black	25 in (635 mm)
White	25 in (635 mm)
Blue	33 in (838 mm)
Red	33 in (838 mm)
Yellow	47 in (1194 mm)

Specifications by lamp and wattage

Lamp	# of Lamps	Line Volts	System Watts	Nom. Line Current	System Ballast Factor	Ballast Efficacy Factor	Power Factor% (>=)	Crest Factor (<=)	THD% (<=)	Min. Starting Temp (°F/°C)
F40T8	2	347	36	0.11 A	0.81		95	1.7	10	60/16
	2	347	27	0.08 A	0.83		95	1.7	12	60/16
F32T8/WM	1	347	43	0.13 A	0.71		95	1.7	10	60/16
	2	347	24	0.07 A	0.77		95	1.7	12	60/16
F32T8/25W	1	347	37	0.11 A	0.71		95	1.7	10	60/16
	2	347	29	0.09 A	0.85		95	1.7	12	0/-18
	2	347	25	0.08 A	0.80		95	1.7	12	60/16
	1	347	47	0.14 A	0.71		95	1.7	10	0/-18
F32T8	1	347	40	0.12 A	0.71		95	1.7	10	60/16
	2	347	32	0.10 A	0.71		95	1.7	15	60/16
F25T8/WM	1	347	21	0.07 A	0.78		90	1.7	15	0/-18
	2	347	24	0.08 A	0.85		95	1.7	12	0/-18
F25T8	1	347	37	0.11 A	0.72		95	1.7	10	0/-18
	2	347	24	0.07 A	0.71		90	1.7	12	60/16
	2	347	18	0.06 A	0.84		95	1.7	15	0/-18
	1	347	17	0.06 A	0.78		90	1.7	15	0/-18
F17T8	1	347	27	0.08 A	0.72		95	1.7	15	0/-18

Safety and performance

Product is compliant with material restriction requirements of RoHS ANSI – C62.41 UL Type 1 Outdoor UL Type HL FCC – CLASS A Non-Consumer UL Class P cUL Listed UL Listed NRCan

High Temperature Rated: Suitable for high temperature applications 70°C max case temp 5 yr warranty or 90°C max case temp 3 yr warranty.

See page E-1 for warranty information.

UltraStart® T8 120–277V Programmed Start

T8 Programmed Start Ballasts For F17 (2 ft), F25 (3 ft), F32 (4 ft) Lamps

62722 - GE432PS347-L

UltraStart® T8 Programmed Start

4 or 3 F32T8 347V Low Watt .71 BF UltraStart®

- A new generation of ultra-efficient Programmed Start ballasts (> 90% efficiency)
- Extends lamp life in frequently switched applications (> 100,000 on/off cycles)
- Starting time visually the same as instant start
- Parallel lamp operation means system maintenance is easier to manage
- Anti-striation circuitry reduces striations with energy saving lamps
- < 10% THD, > 99% power factor

General characteristics

Ballast Type	Electronic – Program / Rapid Start
Starting Method	Programmed start
Lamp Wiring	Parallel
Line Voltage Regulation (+/-)	10%
Ambient Temperature (MAX)	
Case Temperature (MAX)	70°C (158°F)
Ballast Factor	Low-PS (.71)
Power Factor Correction	Active
Sound Rating	A (20-24 decibels)
Additional Info	Anti-striation control, Thermally protected, Universal voltage, TCLP compliant, Auto-restart

Electrical characteristics

Supply Current Frequency	60 Hz
Supply Current Frequency (MIN)	50 Hz/60 Hz

Order information

10 Pack	Pallet Pack	DIY Pack	IP Pack
62722			

Dimensions

Wiring diagram – LFL PS4 – see example on page 11-21	
Case dimensions – Ref Drawing -A – see page 11-22	
Length (L)	9.5 in (241 mm)
Width (W)	1.7 in (43 mm)
Height (H)	1.2 in (30 mm)
Mounting dimensions	
Mount Length (M)	8.9 in (226 mm)
Mount Width (X or F)	1.1 in (29 mm)
Mount Slots (MS)	0.3 in (8 mm)
Weight	1.65 lbs
Exit Type	Side
Remote Mounting Distance to Lamp (F32T8)	18 ft
Remote Mounting Wire Gauge	18 AWG
Lead lengths	**Length (± 1 in)**
Black	25 in (635 mm)
White	25 in (635 mm)
Blue	33 in (838 mm)
Blue/White	33 in (838 mm)
Red	33 in (838 mm)
Red/White	33 in (838 mm)
Yellow	47 in (1194 mm)

Specifications by lamp and wattage

Lamp	# of Lamps	Line Volts	System Watts	Nom. Line Current	System Ballast Factor	Ballast Efficacy Factor	Power Factor% (>=)	Crest Factor (<=)	THD% (<=)	Min. Starting Temp (°F/°C)
F40T8	3	347	90	0.27 A	0.74		95	1.7	10	60/16
	4	347	83	0.25 A	0.71		95	1.7	10	60/16
F32T8/WM	3	347	69	0.21 A	0.79		95	1.7	10	60/16
	4	347	69	0.21 A	0.71		95	1.7	10	60/16
F32T8/25W	3	347	58	0.17 A	0.73		95	1.7	10	60/16
	4	347	88	0.27 A	0.71		95	1.7	10	0/-18
F32T8	3	347	76	0.22 A	0.79		95	1.7	10	0/-18
	4	347	76	0.23 A	0.71		95	1.7	10	60/16
F28T8	3	347	63	0.19 A	0.76		95	1.7	10	60/16
	4	347	71	0.21 A	0.72		95	1.7	10	0/-18
F25T8	3	347	59	0.18 A	0.78		95	1.7	10	0/-18
	4	347	51	0.15 A	0.72		95	1.7	10	0/-18
F17T8	3	347	43	0.13 A	0.78		95	1.7	10	0/-18

Safety and performance

Product is compliant with material restriction requirements of RoHS ANSI – C62.41 UL Type 1 Outdoor UL Type HL FCC – CLASS A Non-Consumer UL Class P

cUL Listed UL Listed NEMA Premium NRCan

High Temperature Rated: Suitable for high temperature applications 70°C max case temp 5 yr warranty or 90°C max case temp 3 yr warranty.

See page E-1 for warranty information.

UltraStart® T8 120–277V Programmed Start

T8 Programmed Start Ballasts For F17 (2 ft), F25 (3 ft), F32 (4 ft) Lamps

62723 - GE232PS347-N

UltraStart® T8 Programmed Start

2 or 1 F32T8 347V Normal Light .88 BF UltraStart®

- A new generation of ultra-efficient Programmed Start ballasts (> 90% efficiency)
- Extends lamp life in frequently switched applications (> 100,000 on/off cycles)
- Starting time visually the same as instant start
- Parallel lamp operation means system maintenance is easier to manage
- Anti-striation circuitry reduces striations with energy saving lamps
- < 10% THD, > 99% power factor

General characteristics

Ballast Type	Electronic – Program / Rapid Start
Starting Method	Programmed start
Lamp Wiring	Parallel
Line Voltage Regulation (+/-)	10%
Ambient Temperature (MAX)	
Case Temperature (MAX)	70°C (158°F)
Ballast Factor	Normal
Power Factor Correction	Active
Sound Rating	A (20-24 decibels)
Additional Info	Anti-striation control, Thermally protected, Universal voltage, TCLP compliant, Auto-restart

Electrical characteristics

Supply Current Frequency	60 Hz
Supply Current Frequency (MIN)	50 Hz/60 Hz

Order information

10 Pack	Pallet Pack	DIY Pack	IP Pack
62723			

Dimensions

Wiring diagram – LFL PS2 – see example on page 11-21	
Case dimensions – Ref Drawing -A – see page 11-22	
Length (L)	9.5 in (241 mm)
Width (W)	1.7 in (43 mm)
Height (H)	1.2 in (30 mm)
Mounting dimensions	
Mount Length (M)	8.9 in (226 mm)
Mount Width (X or F)	1.1 in (29 mm)
Mount Slots (MS)	0.3 in (8 mm)
Weight	1.65 lbs
Exit Type	Side
Remote Mounting Distance to Lamp (F32T8)	18 ft
Remote Mounting Wire Gauge	18 AWG
Lead lengths	**Length (± 1 in)**
Black	25 in (635 mm)
White	25 in (635 mm)
Blue	33 in (838 mm)
Red	33 in (838 mm)
Yellow	47 in (1194 mm)

Specifications by lamp and wattage

Lamp	# of Lamps	Line Volts	System Watts	Nom. Line Current	System Ballast Factor	Ballast Efficacy Factor	Power Factor% (>=)	Crest Factor (<=)	THD% (<=)	Min. Starting Temp (°F/°C)
F40T8	1	347	45	0.13 A	0.99		95	1.7	10	0/-18
	2	347	54	0.16 A	0.88		95	1.7	10	60/16
F32T8/WM	1	347	34	0.10 A	1.01		95	1.7	10	0/-18
	2	347	46	0.14 A	0.88		95	1.7	10	60/16
F32T8/25W	1	347	29	0.09 A	0.96		95	1.7	12	60/16
	2	347	57	0.17 A	0.88		95	1.7	10	0/-18
F32T8	1	347	35	0.11 A	1.03		95	1.7	10	60/16
	2	347	50	0.15 A	0.88		95	1.7	10	60/16
F28T8	1	347	32	0.10 A	0.99		95	1.7	10	60/16
	2	347	39	0.12 A	0.88		95	1.7	10	0/-18
F25T8/WM	1	347	25	0.08 A	0.99		90	1.7	12	0/-18
	2	347	45	0.14 A	0.90		95	1.7	10	0/-18
F25T8	1	347	30	0.09 A	1.03		95	1.7	12	60/16
	2	347	29	0.09 A	0.88		95	1.7	12	0/-18
F17T8/WM	1	347								
	2	347	32	0.10 A	0.89		95	1.7	10	0/-18
F17T8	1	347	22	0.07 A	1.03		95	1.7	15	0/-18

Safety and performance

Product is compliant with material restriction requirements of RoHS ANSI – C62.41 UL Type 1 Outdoor UL Type HL FCC – CLASS A Non-Consumer UL Class P cUL Listed UL Listed NRCan

High Temperature Rated: Suitable for high temperature applications 70°C max case temp 5 yr warranty or 90°C max case temp 3 yr warranty.

See page E-1 for warranty information.

UltraStart® T8 120–277V Programmed Start

T8 Programmed Start Ballasts For F17 (2 ft), F25 (3 ft), F32 (4 ft) Lamps

62724 - GE332PS347-N

UltraStart® T8 Programmed Start

3 F32T8 347V Normal Light .88 BF UltraStart®

- A new generation of ultra-efficient Programmed Start ballasts (> 90% efficiency)
- Extends lamp life in frequently switched applications (> 100,000 on/off cycles)
- Starting time visually the same as instant start
- Parallel lamp operation means system maintenance is easier to manage
- Anti-striation circuitry reduces striations with energy saving lamps
- < 10% THD, > 99% power factor

General characteristics

Ballast Type	Electronic – Program / Rapid Start
Starting Method	Programmed start
Lamp Wiring	Parallel
Line Voltage Regulation (+/-)	10%
Ambient Temperature (MAX)	
Case Temperature (MAX)	70°C (158°F)
Ballast Factor	Normal
Power Factor Correction	Active
Sound Rating	A (20-24 decibels)
Additional Info	Anti-striation control, Thermally protected, Universal voltage, TCLP compliant, Auto-restart

Electrical characteristics

Supply Current Frequency	60 Hz
Supply Current Frequency (MIN)	50 Hz/60 Hz

Order information

10 Pack	Pallet Pack	DIY Pack	IP Pack
62724			

Dimensions

Wiring diagram – LFL PS3 – see example on page 11-21	
Case dimensions – Ref Drawing -A – see page 11-22	
Length (L)	9.5 in (241 mm)
Width (W)	1.7 in (43 mm)
Height (H)	1.2 in (30 mm)
Mounting dimensions	
Mount Length (M)	8.9 in (226 mm)
Mount Width (X or F)	1.1 in (29 mm)
Mount Slots (MS)	0.3 in (8 mm)
Weight	1.65 lbs
Exit Type	Side
Remote Mounting Distance to Lamp (F32T8)	18 ft
Remote Mounting Wire Gauge	18 AWG
Lead lengths	**Length (± 1 in)**
Black	25 in (635 mm)
White	25 in (635 mm)
Blue	33 in (838 mm)
Red	33 in (838 mm)
Red/White	33 in (838 mm)
Yellow	47 in (1194 mm)

Specifications by lamp and wattage

Lamp	# of Lamps	Line Volts	System Watts	Nom. Line Current	System Ballast Factor	Ballast Efficacy Factor	Power Factor% (>=)	Crest Factor (<=)	THD% (<=)	Min. Starting Temp (°F/°C)
F40T8	2	347	78	0.23 A	0.94		95	1.7	10	60/16
	3	347	77	0.23 A	0.88		95	1.7	10	60/16
F32T8/WM	2	347	59	0.18 A	0.98		95	1.7	10	60/16
	3	347	65	0.19 A	0.88		95	1.7	10	60/16
F32T8/25W	2	347	49	0.15 A	0.91		95	1.7	10	60/16
	3	347	83	0.25 A	0.88		95	1.7	10	0/-18
F32T8	2	347	63	0.19 A	1.00		95	1.7	10	0/-18
	3	347	70	0.21 A	0.88		95	1.7	10	60/16
F28T8	2	347	54	0.16 A	0.95		95	1.7	10	60/16
	3	347	65	0.19 A	0.89		95	1.7	10	0/-18
F25T8	2	347	51	0.15 A	0.99		95	1.7	10	0/-18
	3	347	46	0.14 A	0.88		95	1.7	10	0/-18
F17T8	2	347	36	0.11 A	0.98		95	1.7	10	0/-18

Safety and performance

Product is compliant with material restriction requirements of RoHS ANSI – C62.41 UL Type 1 Outdoor UL Type HL FCC – CLASS A Non-Consumer UL Class P cUL Listed UL Listed NRCan

High Temperature Rated: Suitable for high temperature applications 70°C max case temp 5 yr warranty or 90°C max case temp 3 yr warranty.

See page E-1 for warranty information.

UltraStart® T8 120–277V Programmed Start

T8 Programmed Start Ballasts For F17 (2 ft), F25 (3 ft), F32 (4 ft) Lamps

62725 - GE432PS347-N

UltraStart® T8 Programmed Start

4 F32T8 347V Normal Light .88 BF UltraStart®

- A new generation of ultra-efficient Programmed Start ballasts (> 90% efficiency)
- Extends lamp life in frequently switched applications (> 100,000 on/off cycles)
- Starting time visually the same as instant start
- Parallel lamp operation means system maintenance is easier to manage
- Anti-striation circuitry reduces striations with energy saving lamps
- < 10% THD, > 99% power factor

General characteristics

Ballast Type	Electronic – Program / Rapid Start
Starting Method	Programmed start
Lamp Wiring	Parallel
Line Voltage Regulation (+/-)	10%
Ambient Temperature (MAX)	
Case Temperature (MAX)	70°C (158°F)
Ballast Factor	Normal
Power Factor Correction	Active
Sound Rating	A (20-24 decibels)
Additional Info	Anti-striation control, Thermally protected, Universal voltage, TCLP compliant, Auto-restart

Electrical characteristics

Supply Current Frequency	60 Hz
Supply Current Frequency (MIN)	50 Hz/60 Hz

Order information

10 Pack	Pallet Pack	DIY Pack	IP Pack
62725			

Dimensions

Wiring diagram – LFL PS4 – see example on page 11-21	
Case dimensions – Ref Drawing -A – see page 11-22	
Length (L)	9.5 in (241 mm)
Width (W)	1.7 in (43 mm)
Height (H)	1.2 in (30 mm)
Mounting dimensions	
Mount Length (M)	8.9 in (226 mm)
Mount Width (X or F)	1.1 in (29 mm)
Mount Slots (MS)	0.3 in (8 mm)
Weight	1.65 lbs
Exit Type	Side
Remote Mounting Distance to Lamp (F32T8)	18 ft
Remote Mounting Wire Gauge	18 AWG
Lead lengths	**Length (± 1 in)**
Black	25 in (635 mm)
White	25 in (635 mm)
Blue	33 in (838 mm)
Blue/White	33 in (838 mm)
Red	33 in (838 mm)
Red/White	33 in (838 mm)
Yellow	47 in (1194 mm)

Specifications by lamp and wattage

Lamp	# of Lamps	Line Volts	System Watts	Nom. Line Current	System Ballast Factor	Ballast Efficacy Factor	Power Factor% (>=)	Crest Factor (<=)	THD% (<=)	Min. Starting Temp (°F/°C)
F40T8	3	347		0.31 A	0.91		95	1.7	10	60/16
	4	347		0.31 A	0.88		95	1.7	10	60/16
F32T8/WM	3	347		0.25 A	0.94		95	1.7	10	60/16
	4	347		0.24 A	0.88		95	1.7	10	60/16
F32T8/25W	3	347		0.20 A	0.89		95	1.7	10	60/16
	4	347		0.33 A	0.88		95	1.7	10	0/-18
F32T8	3	347		0.26 A	1.00		95	1.7	10	0/-18
	4	347		0.27 A	0.88		95	1.7	10	60/16
F28T8	3	347		0.22 A	0.91		95	1.7	10	60/16
	4	347		0.25 A	0.88		95	1.7	10	0/-18
F25T8	3	347		0.21 A	0.95		95	1.7	10	0/-18
	4	347		0.18 A	0.88		95	1.7	10	0/-18
F17T8	3	347		0.15 A	0.95		95	1.7	12	0/-18

Safety and performance

Product is compliant with material restriction requirements of RoHS ANSI – C62.41 UL Type 1 Outdoor UL Type HL FCC – CLASS A Non-Consumer UL Class P cUL Listed UL Listed NRCan

High Temperature Rated: Suitable for high temperature applications 70°C max case temp 5 yr warranty or 90°C max case temp 3 yr warranty.

See page E-1 for warranty information.

UltraStart® T8 120–277V Programmed Start

T8 Programmed Start Ballasts For F17 (2 ft), F25 (3 ft), F32 (4 ft) Lamps

62726 - GE232PS347-H

UltraStart® T8 Programmed Start

2 or 1 F32T8 347V High Light 1.18 BF UltraStart®

- A new generation of ultra-efficient Programmed Start ballasts (> 90% efficiency)
- Extends lamp life in frequently switched applications (> 100,000 on/off cycles)
- Starting time visually the same as instant start
- Parallel lamp operation means system maintenance is easier to manage
- Anti-striation circuitry reduces striations with energy saving lamps
- < 10% THD, > 99% power factor

General characteristics

Ballast Type	Electronic – Program / Rapid Start
Starting Method	Programmed start
Lamp Wiring	Parallel
Line Voltage Regulation (+/-)	10%
Ambient Temperature (MAX)	
Case Temperature (MAX)	70°C (158°F)
Ballast Factor	High (1.18)
Power Factor Correction	Active
Sound Rating	A (20-24 decibels)
Additional Info	Anti-striation control, Thermally protected, Universal voltage, TCLP compliant, Auto-restart

Electrical characteristics

Supply Current Frequency	60 Hz
Supply Current Frequency (MIN)	50 Hz

Order information

10 Pack	Pallet Pack	DIY Pack	IP Pack
62726			

Dimensions

Wiring diagram – LFL PS2 – see example on page 11-21	
Case dimensions – Ref Drawing -A – see page 11-22	
Length (L)	9.5 in (241 mm)
Width (W)	1.7 in (43 mm)
Height (H)	1.2 in (30 mm)
Mounting dimensions	
Mount Length (M)	8.9 in (226 mm)
Mount Width (X or F)	1.1 in (29 mm)
Mount Slots (MS)	0.3 in (8 mm)
Weight	2.4 lbs
Exit Type	Side
Remote Mounting Distance to Lamp (F32T8)	18 ft
Remote Mounting Wire Gauge	18 AWG
Lead lengths	**Length (± 1 in)**
Black	25 in (635 mm)
White	25 in (635 mm)
Blue	33 in (838 mm)
Red	33 in (838 mm)
Yellow	47 in (1194 mm)

Specifications by lamp and wattage

Lamp	# of Lamps	Line Volts	System Watts	Nom. Line Current	System Ballast Factor	Ballast Efficacy Factor	Power Factor% (>=)	Crest Factor (<=)	THD% (<=)	Min. Starting Temp (°F/°C)
F40T8	1	347	57	0.17 A	1.28		95	1.7	10	60/16
	2	347	61	0.18 A	0.85		95	1.7	10	60/16
F36T8	1	347	39	0.12 A	0.98		95	1.7	10	60/16
	2	347	69	0.21 A	1.16		95	1.7	10	60/16
F32T8/WM	1	347	43	0.13 A	1.32		95	1.7	10	60/16
	2	347	58	0.17 A	1.09		95	1.7	10	60/16
F32T8/25W	1	347	37	0.11 A	1.27		95	1.7	10	60/16
	2	347	74	0.22 A	1.18		95	1.7	10	0/-18
F32T8	1	347	45	0.14 A	1.33		95	1.7	10	0/-18
	2	347	62	0.19 A	1.13		95	1.7	10	60/16
F28T8	1	347	40	0.12 A	1.30		95	1.7	10	60/16
	2	347	59	0.17 A	1.17		95	1.7	10	0/-18
F25T8	1	347	38	0.11 A	1.32		95	1.7	10	0/-18
	2	347	62	0.13 A	1.16		95	1.7	10	0/-18
F17T8	1	347	28	0.08 A	1.31		95	1.7	12	0/-18

Safety and performance

Product is compliant with material restriction requirements of RoHS ANSI – C62.41 UL Type 1 Outdoor UL Type HL FCC – CLASS A Non-Consumer UL Class P

cUL Listed UL Listed NRCan

High Temperature Rated: Suitable for high temperature applications 70°C max case temp 5 yr warranty or 90°C max case temp 3 yr warranty.

See page E-1 for warranty information.

UltraStart® T8 120–277V Programmed Start

T8 Programmed Start Ballasts For F17 (2 ft), F25 (3 ft), F32 (4 ft) Lamps

62727 - GE332PS347-H

UltraStart® T8 Programmed Start

3 F32T8 347V High Light 1.18 BF UltraStart®

- A new generation of ultra-efficient Programmed Start ballasts (> 90% efficiency)
- Extends lamp life in frequently switched applications (> 100,000 on/off cycles)
- Starting time visually the same as instant start
- Parallel lamp operation means system maintenance is easier to manage
- Anti-striation circuitry reduces striations with energy saving lamps
- < 10% THD, > 99% power factor

General characteristics

Ballast Type	Electronic – Program / Rapid Start
Starting Method	Programmed start
Lamp Wiring	Parallel
Line Voltage Regulation (+/-)	10%
Ambient Temperature (MAX)	
Case Temperature (MAX)	70°C (158°F)
Ballast Factor	High (1.18)
Power Factor Correction	Active
Sound Rating	A (20-24 decibels)
Additional Info	Anti-striation control, Thermally protected, Universal voltage, TCLP compliant, Auto-restart

Electrical characteristics

Supply Current Frequency	60 Hz
Supply Current Frequency (MIN)	50 Hz

Order information

10 Pack	Pallet Pack	DIY Pack	IP Pack
62727			

Dimensions

Wiring diagram – LFL PS3 – see example on page 11-21	
Case dimensions – Ref Drawing -A – see page 11-22	
Length (L)	9.5 in (241 mm)
Width (W)	1.7 in (43 mm)
Height (H)	1.2 in (30 mm)
Mounting dimensions	
Mount Length (M)	8.9 in (226 mm)
Mount Width (X or F)	1.1 in (29 mm)
Mount Slots (MS)	0.3 in (8 mm)
Weight	2.4 lbs
Exit Type	Side
Remote Mounting Distance to Lamp (F32T8)	18 ft
Remote Mounting Wire Gauge	18 AWG
Lead lengths	**Length (± 1 in)**
Black	25 in (635 mm)
White	25 in (635 mm)
Blue	33 in (838 mm)
Red	33 in (838 mm)
Red/White	33 in (838 mm)
Yellow	47 in (1194 mm)

Specifications by lamp and wattage

Lamp	# of Lamps	Line Volts	System Watts	Nom. Line Current	System Ballast Factor	Ballast Efficacy Factor	Power Factor% (>=)	Crest Factor (<=)	THD% (<=)	Min. Starting Temp (°F/°C)
F40T8	2	347	102	0.30 A	1.23		95	1.7	10	60/16
	2	347	68	0.20 A	0.94		95	1.7	10	60/16
F36T8	3	347	89	0.26 A	0.85		95	1.7	10	60/16
	2	347	77	0.23 A	1.27		95	1.7	10	60/16
F32T8/WM	3	347	102	0.30 A	1.16		95	1.7	10	60/16
	2	347	63	0.19 A	1.21		95	1.7	10	60/16
F32T8/25W	3	347	83	0.25 A	1.10		95	1.7	10	60/16
	2	347	83	0.25 A	1.28		95	1.7	10	0/-18
F32T8	3	347	110	0.33 A	1.18		95	1.7	10	0/-18
	2	347	71	0.21 A	1.25		95	1.7	10	60/16
F28T8	3	347	94	0.28 A	1.13		95	1.7	10	60/16
	2	347	66	0.19 A	1.27		95	1.7	10	0/-18
F25T8	3	347	86	0.25 A	1.17		95	1.7	10	0/-18
	2	347	46	0.14 A	1.26		95	1.7	10	0/-18
F17T8	3	347	61	0.18 A	1.16		95	1.7	10	0/-18

Safety and performance

Product is compliant with material restriction requirements of RoHS ANSI – C62.41 UL Type 1 Outdoor UL Type HL FCC – CLASS A Non-Consumer UL Class P cUL Listed UL Listed NRCan

High Temperature Rated: Suitable for high temperature applications 70°C max case temp 5 yr warranty or 90°C max case temp 3 yr warranty.

See page E-1 for warranty information.

UltraStart® T8 120–277V Programmed Start

T8 Programmed Start Ballasts For F17 (2 ft), F25 (3 ft), F32 (4 ft) Lamps

63041 - GE332PS347-L

UltraStart® T8 Programmed Start

2 or 1 F32T8 347V High Light 1.18 BF UltraStart®

- A new generation of ultra-efficient Programmed Start ballasts (> 90% efficiency)
- Extends lamp life in frequently switched applications (> 100,000 on/off cycles)
- Starting time visually the same as instant start
- Parallel lamp operation means system maintenance is easier to manage
- Anti-striation circuitry reduces striations with energy saving lamps
- < 10% THD, > 99% power factor

General characteristics

Ballast Type	Electronic – Program / Rapid Start
Starting Method	Programmed start
Lamp Wiring	Parallel
Line Voltage Regulation (+/-)	10%
Ambient Temperature (MAX)	
Case Temperature (MAX)	70°C (158°F)
Ballast Factor	Low-PS (.71)
Power Factor Correction	Active
Sound Rating	A (20-24 decibels)
Additional Info	Anti-striation control, Thermally protected, Universal voltage, TCLP compliant, Auto-restart

Electrical characteristics

Supply Current Frequency	60 Hz
Supply Current Frequency (MIN)	50 Hz/60 Hz

Order information

10 Pack	Pallet Pack	DIY Pack	IP Pack
63041			

Dimensions

Wiring diagram – LFL PS3 – see example on page 11-21	
Case dimensions – Ref Drawing -A – see page 11-22	
Length (L)	9.5 in (241 mm)
Width (W)	1.7 in (43 mm)
Height (H)	1.2 in (30 mm)
Mounting dimensions	
Mount Length (M)	8.9 in (226 mm)
Mount Width (X or F)	1.1 in (29 mm)
Mount Slots (MS)	0.3 in (8 mm)
Weight	1.65 lbs
Exit Type	Side
Remote Mounting Distance to Lamp (F32T8)	18 ft
Remote Mounting Wire Gauge	18 AWG
Lead lengths	**Length (± 1 in)**
Black	25 in (635 mm)
White	25 in (635 mm)
Blue	33 in (838 mm)
Red	33 in (838 mm)
Red/White	33 in (838 mm)
Yellow	47 in (1194 mm)

Specifications by lamp and wattage

Lamp	# of Lamps	Line Volts	System Watts	Nom. Line Current	System Ballast Factor	Ballast Efficacy Factor	Power Factor% (>=)	Crest Factor (<=)	THD% (<=)	Min. Starting Temp (°F/°C)
F40T8	2	347	66	0.19 A	0.77		95	1.7	10	60/16
	2	347	50	0.15 A	0.79		95	1.7	10	60/16
F32T8/WM	3	347	66	0.20 A	0.71		95	1.7	10	60/16
	2	347	43	0.13 A	0.75		95	1.7	10	60/16
F32T8/25W	3	347	56	0.17 A	0.71		95	1.7	10	60/16
	2	347	52	0.16 A	0.81		95	1.7	10	0/-18
F32T8	3	347	70	0.21 A	0.71		95	1.7	10	0/-18
	2	347	46	0.14 A	0.77		95	1.7	10	60/16
F28T8	3	347	60	0.18 A	0.71		95	1.7	10	60/16
	2	347	43	0.13 A	0.81		95	1.7	10	0/-18
F25T8	3	347	55	0.16 A	0.73		95	1.7	10	0/-18
	2	347	31	0.10 A	0.81		95	1.7	12	0/-18
F17T8	3	347	40	0.12 A	0.73		95	1.7	10	0/-18

Safety and performance

Product is compliant with material restriction requirements of RoHS ANSI – C62.41 UL Type 1 Outdoor UL Type HL FCC – CLASS A Non-Consumer UL Class P

cUL Listed UL Listed NRCan

High Temperature Rated: Suitable for high temperature applications 70°C max case temp 5 yr warranty or 90°C max case temp 3 yr warranty.

See page E-1 for warranty information.

Wiring Diagrams
T8 Programmed Start Ballasts

LFL PS1

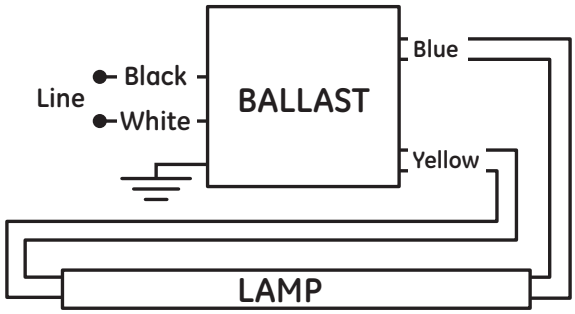

LFL PS2

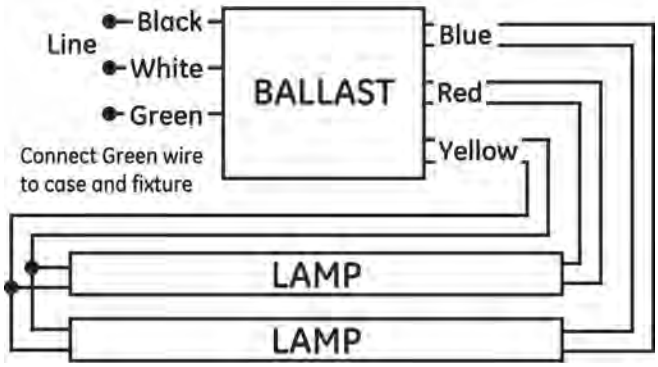

LFL PS3

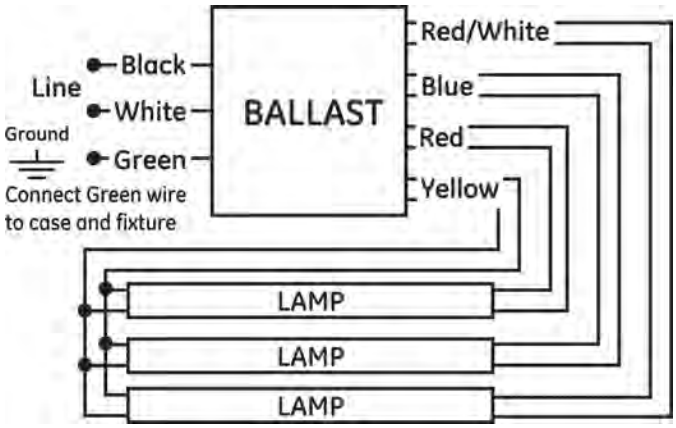

LFL PS4

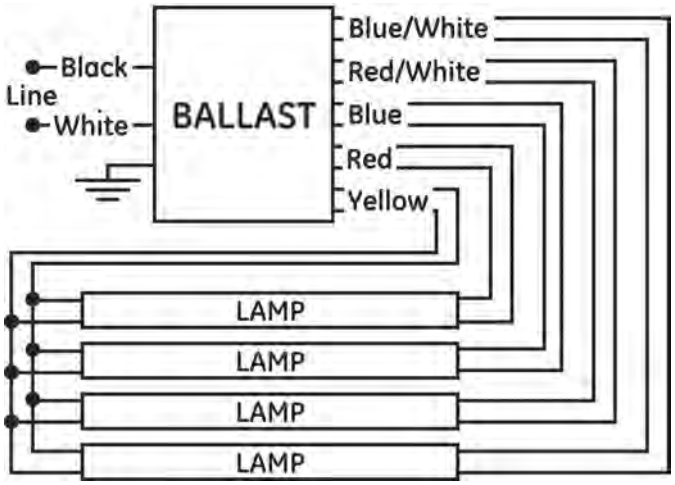

See page E-1 for warranty information.

Case Dimensions
T8 Programmed Start Ballasts

-A

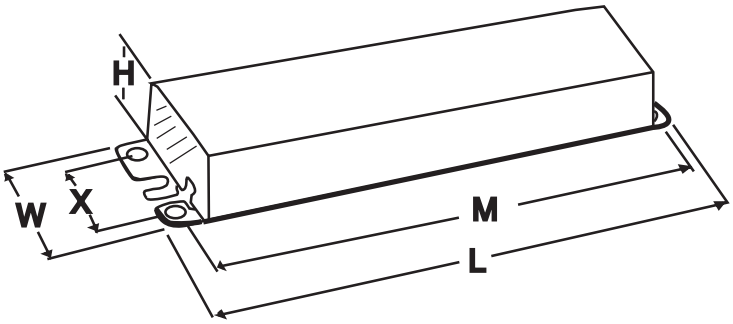

LG

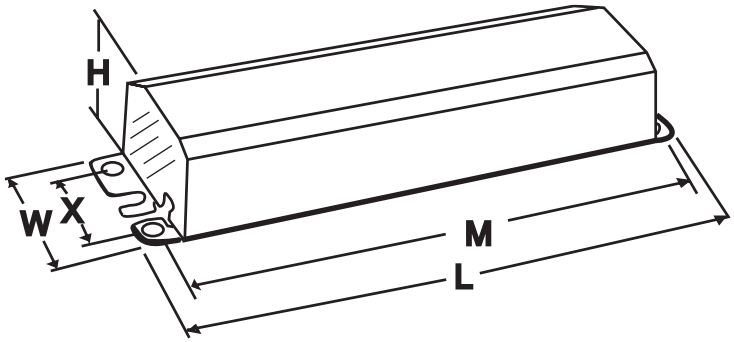

See page E-1 for warranty information.

Table of Contents
T8/T5 Dimming Ballasts

Dimming Applications

UltraStart T8 Program Start Bi-level Switching Ballast 100% to 30% Light Output

As ballast efficiency increases, controls and dimming ballasts will deliver the next level of energy savings. Proper installation and set up is needed to ensure the system will deliver the energy savings while maximizing lamp life. GE dimming ballasts are available for load shed as well as deep dimming operation. Dimming applications generally use full wattage lamps, but GE UltraMax® 28W lamps are also suitable for use on GE dimming ballasts. The ballast must be mounted in the same fixture as the lamps, no tandem or remote operation is permitted for programmed start dimming ballasts.

In order to achieve maximum lamp performance, the lamps should be seasoned at full power for 12 hours per NEMA guidelines prior to dimming operation. Ballasts for programmed start dimming must use rapid start type lampholders that accommodate two separate wires that connect one to each lamp pin. Shunted or shorted lampholders cannot be used with programmed start dimming systems. Load shed ballasts are instant start and can be used with shunted lampholders. The load shed ballast can be used in some tandem fixture applications with total lead length determined by the specific application.

GE programmed start dimming ballasts are compatible with 0-10V Class 1 or Class 2 wiring systems rated as ANSI Type 1. GE load shed ballasts feature step or variable 0-10V control. The step options include Class 1 compatible control and dual input leads for double switched applications such as classrooms.

Key Fluorescent Dimming Strategies

- Daylight harvesting.
  Ideal for spaces occupied by users performing important stationary tasks, dimming enables the lighting system to reduce light output in response to daylight availability, saving energy.
- Adaptive compensation.
  This strategy involves reducing light levels at night in spaces with non-critical tasks based on research that people prefer and need less light at night than during daytime.
- Demand response.
  In this strategy, the control system responds to a signal from the local utility to reduce light levels during a grid emergency. The owner receives financial incentives such as special rates in return.

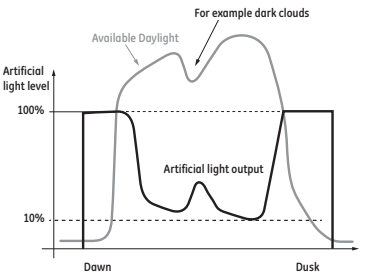

See page E-1 for warranty information.

UltraStart® T8 100-3% Dimming Ballast in Normal and High Ballast Factor

GE UltraStart® 0-10V T8 electronic dimming fluorescent ballast offers the most efficient dimming system on the market today. They are available in 1-4 lamp normal ballast factor or 0.88 light output and 2-4 lamp high ballast factor or 1.18 light output for applications where more light is needed. UltraStart® dimming ballasts are multi-volt and operate in 120-277 voltage range.

Today's fixed light fluorescent systems are now 93% efficient and the next stage in additional energy savings is to either shut lights off with occupancy sensors or efficiently dim the lights with GE UltraStart® 0-10V dimming ballast. This ballast can be effectively incorporated in popular lighting energy reduction strategies such as daylight harvesting, load shedding and energy management systems to allow for a more affordable and flexible controllable lighting system.

UltraStart® T8 Program Start Bi-level Switching Ballast 100% to 30% Light Output

The new UltraStart® T8 hi-efficiency dimming ballast family dims from 100% to 30% light output. The ballast in the family operates at normal .88 ballast factor and low .78 ballast factors when used at 100% light output. We offer a 1- and 2-lamp ballast at normal light output, and 2-lamp ballast at low light output. The ballasts are designed to meet California Energy Efficiency Standards (Title 24) and ASRAE 2010 requirements for multi-level lighting. UltraStart® T8 Bi-level switching ballast reduce energy by over 50% when light is not needed and provides architectural dimming at 30% light output. The 1-lamp ballast is ideal for hallway and stairwell fixture applications and the 2-lamp L and N ballast are excellent applications for Office, School and Hospital patient rooms.

The Bi-level UltraStart® ballast is easy and inexpensive to install:

- The ballast can be switched manually by using 2 switch legs: the first switches on and the second switches off @ 30% light and both switches on for 100% light.
- Operates with a line voltage motion sensor when the space is not occupied
- Two black leads control the light level. Connection of both black leads to hot will result in 100% light. Connect 1 black lead to hot and dim to 30% light level.
- Can be switched between 100% and 30% continuously without reducing rated lamp life

UltraStart® T5 Program Start Step Dimming Ballast 100% to 35% Light Output:

Now available for F28T5 and F24T5HO lamps; Provides a simple solution to meet new California Title 24 reduced power requirements for locations that include corridors, stairwells, warehouses, classrooms, libraries, and parking garages.

0-10V Dimming Load Shed Instant Start Ballast

The 0-10V Dimming Load Shed Instant Start ballast is the second dimming ballast option from GE and can dim at any level between a high 1.18 ballast factor or 100% light to a low .71 ballast factor @ 60%. It is also available in 2, 3, 4 and 6 lamp options.

Low voltage wiring is required to connect the ballast to the controller. A common low voltage wiring type is stranded- copper twisted pair 18AWG. Low voltage wiring is considered Class 2 and not recommended for placement in the same conduit as Class 1 wiring, which is the power, ground and neutral lines. Most codes allow Class 2 wiring to be run without conduit and junction boxes.

The user can save even more energy with this ballast because it is also compatible and warranted with F32/25, F28 and F32/WM energy efficient 4 ft T8 lamps. The ballast includes GE Patented anti-striation control capacitor that will prevent striations that are common for these lamps.

0-10V Dimming Load Shed Features:

- Operates using 0-10 VDC analog control dimmer and wiring – the most popular and cost efficient protocol
- Uses 4 wires: (hot and neutral) and two control wires (purple and gray) to control the voltage signal to the ballast. When the voltage is 10 VDC, then the lamps will be at full light output. As the voltage decreases, the ballast decreases light output. When the control voltage is 0 VDC, then the ballast will generate 60% light output.
- Compatible with 0-10V controllers that meet ANSI specifications

In addition to the outstanding operating efficiencies, these ballast are designed to operate in hot conditions. They are UL rated for operation in ambient temperatures of 55ºC or 131ºF, and feature UL Type CC Anti-Arc guard protection to prevent arcing if there is a bad or broken socket.

Both ballast are compliant with UL1598, which requires new and retrofitted fixtures to have ballasts with UL Type CC Anti Arc guard or special circle I sockets. Like all GE Electronic ballast, product is compliant with material restriction requirements of RoHS. The ballast operates utilizing 0-10 VDC analog control dimmer and wiring. This is the most popular and cost efficient protocol. The ballast uses 4 wires: (hot and neutral) and two control wires (purple and gray) to control the voltage signal to the ballast. When the voltage is 10 VDC then the lamp/ballast will be at full light output. As the voltage decreases the ballast decreases light out put. Low voltage wiring is required to connect the ballast to the controller. A common low voltage wiring type is stranded- copper twisted pair 18AWG. Low voltage wiring is considered Class 2 and not recommended for placement in the same conduit as Class 1 wiring, which is the power, ground and neutral lines. Most codes allow Class 2 wiring to be run without conduit and junction boxes. GE UltraStart® T8 dimming ballast is compatible with 0-10V controllers that meet ANSI specifications

GE UltraStart® 0-10V dimming ballast use less watts than other dimming ballast on the market today. Other dimming ballast manufacturers use more energy by continuously heating the lamps cathodes to maintain light. This is old technology. GE designed UltraStart® dimming ballast turn off the heat to the lamp cathodes after starting the lamp and keeps the heat off until dimmed to a 0.71 ballast factor. This saves watts through this range.

The Continuous Cathode cut-out technology allows for the essentially the same efficiency at 100% light output as our UltraMax® instant start and UltraStart® program start ballast. The ballast

See page E-1 for warranty information.

is also in compliance with a new proposed standard from NEMA (National electrical manufacturers association) called NEMA-LL-9. This standard calls for cathode heating specifications on dimming levels from 35% light output to 1%. By maintaining these heating standards at lower dimming levels, we can assure the user of optimal lamp performance with minimal end blackening and full program start rated lamp warranties.

The new dimming ballast save money on maintenance cost because they operate in parallel. When a lamp fails in a multiple lamp fixture powered by GE's dimming ballast, the remaining lamps stay lit. The maintenance staff only needs to replace the failed lamp. In all other manufacturer's dimming ballast, if one lamp fails then the entire fixture will fail. The maintenance staff will typically replace all the lamps because they cannot identify the failed lamp.

Instant Start Bi-Level Switching Ballast

The new Instant Start Bi-Level Switching ballast operates at a high 1.18 ballast factor at 100% light output and can switch lamps to a low .71 ballast factor or 60% light output. The ballast is available in 2, 3, 4 and a 6-lamp configuration and is designed to reduce light levels within the fixture when maximum light levels are not needed.

The T8 UltraMax® 6-lamp Bi-level ballast has achieved 95% efficiency, setting new standards for ballast efficiency. The 4 and 6 lamp Bi-level ballast are perfect options for popular hi-bay fixtures and applications. Fixtures can dim when the space is not in use and lighted areas are maintained for safety and convenience. The 2 and 3 lamp Bi-level ballast are perfect for reducing lamps in a retrofitted fixture with the option of dimming the fixture when the light is not needed.

The user can save even more energy because the new ballast is compatible and warranted with F32/25, F28 and F32/WM energy efficient 4 ft T8 lamps. The ballast includes GE Patented anti-striation control capacitor that will prevent striations that are common for these lamps. The Bi-level switching ballast is the most efficient and easy to commission dimming option on the market today.

Bi-Level Switching Features:

- Can be operated manually with 2 switch legs: 1 switch on / 2 switch off @ 60% light and both switches on @ 100% light.
- Operates with a motion sensor and switch to the 60% light level when the space is not occupied
- Two black hot leads to control the light level. Connection of either black lead to hot will give 60% light level. Connection of both black leads to hot will result in 100% light level.
- Can be switched between 100% and 60% continuously without reducing rated lamp life.

UltraMax® Bi-Level (S60) Dimming and Load Shed (V60) Dimming

These extremely high efficiency multi-volt (120-277V) electronic ballasts offer the benefits of a low cost instant start design but the flexibility to dim from 100% to 60% or load shed dim with a 0-10V controller anywhere between 100% and 60%. With F32T8 lamps there is a direct 40% energy reduction when dimming from 100% to 60% light level reduction. Lamp life is not impacted by dimming from high to low. For applications with more than 5 starts per day, a programmed start (PS) or PS dimming ballast is recommended.

GE Dimming Ballasts and NEMA LL-9

NEMA LL-9 is the first coordinated guidance on achieving industry lamp and ballast compatibility with T8 dimming systems and our UltraStart® T8 0-10V full range dimming ballasts are fully compliant. Parallel lamp operation ensures that each lamp is treated properly and within LL-9 specifications with consistent lamp-to-lamp results. Series wired dimming ballasts result in uneven cathode heating and inconsistent lamp to lamp performance and life. Using NEMA LL-9 compliant ballasts means adhering to an open standard that enables you to use different lamp and ballast manufacturers and still know that you will have a reliable system. The entire GE Dimming Ballast offering is NEMA LL-9 compliant. Demand it in your facility.

It is worth noting that when installing new fixtures with dimming capability or relamping with new lamps that GE recommends seasoning the lamps overnight at high ballast factor, or full light output, per NEMA guidelines.

Instant Start vs. Rapid Start Sockets

When using programmed start or dimming ballasts in fixtures, sockets must be 2-pin rapid start type. Fixtures with T8 instant start ballasts must use jumpered rapid start sockets or shunted lamp holders (internal to the lamp holder) that bridge the lamp bi-pins together into one contact on each side of the lamp. If retrofitting from a instant start ballast fixture with shunted sockets to a dimming or programmed start ballast, rapid start type sockets must be used to properly start lamps and maintain rated lamp life.

See page E-1 for warranty information.

UltraStart® T8 Step Dimming Program Start Dimming Ballast
T8 Dimming Ballasts

68966-GE132-MVPS-N-S30

Ultrastart® Bi-level Dimming

Program Start Bi-level Dimming

1 F32T8 120-277V "N" .88 BF UltraStart® 100/30% Bi-level Switching

- UL Type CC Rating provides protection against arcing in electrical devices
- Bi-level Switching 100 to 30%
- Program Start Bi-level Dimming
- Anti-striation Control for better light quality, with no striations
- 2 or 1 F32T8 120-277V "N" .88 BF UltraStart® 100/30% Bi-level Switching
- UL 55C (131F) Ambient rating - High Temparature Protection Circuit
- Multi-Volt Technology handles voltage from 120-277
- Parallel Lamp operation

General characteristics

Ballast Type	Electronic-Dimming
Dimming Type	Step Dimming
Starting Method	Program Start
Lamp Wiring	Parallel
Line Voltage Regulation+/-	10%
Ambient Temperature (Max)	55° C (131° F)
Case Temperature(Max)	70° C (158° F)
Ballast Factor	.88 to .25
Power Factor Correction	Active
Sound Rating	A
Enclosure Type	Metal
Additional Info	No PCB'sAnti-striation control, Unviversal voltage inherent thermal protection

Electrical characteristics

Supply Current Frequency (MIN)	50/60 Hz

Order information

10 Pack	Pallet Pack	DIY Pack	IP Pack
68966			

Dimensions

Wiring diagram - LFL - 1N S30 – see example on Page 12-27	
Case dimensions - Ref Drawing -A – see Page 12-29	
Length (L)	9.5 in (241mm)
Width (W)	1.7 in (43mm)
Height (H)	1.2 in (31mm)
Mounting dimensions	
Mount Length	8.9 in (226mm)
Mount Width	1.18 in (30mm
Mount Slots (MS)	.3 in (8mm)
Weight	1.47
Exit Type	Side
Remote Mounting Distance to lamp (F32T8)	8 Ft
Remote Mounting Wire gage	18 AWG
Lead lengths	
Black	25.0 in (635mm)
Blue	33.0 in (864mm)
Red	33.0 in (864mm)
White	25.0 in (635mm)
Yellow	47.0 in (1194mm)

Specifications by lamp and wattage

Lamps		Light Output	Input Watts		UL Nominal line Amps		Power Factor		Ballast	Harmonic Total		Crest	Min Starting
Type	#		120V	277V	120V	277V	120V	277V	Factor	120V	277V	Factor	Temp
F32T8 /U	1	100%	30	29	0.26	0.12	0.99	0.94	0.88	5%	10%	<1.7	0F
	1	30%	12	13	0.11	0.06	0.99	0.93	0.25	10%	20%	<1.7	32F
F32T8/WM	1	100%	28	28	0.25	0.11	0.99	0.93	0.88	5%	10%	<1.7	32F
	1	30%	12	13	0.11	0.06	0.99	0.83	0.18	10%	21%	<1.7	32F
F28T8	1	100%	25	26	0.22	0.10	0.99	0.92	.87	5%	11%	<1.7	32F
	1	30%	12	13	0.11	0.06	0.99	0.83	.22	10%	21%	<1.7	32F
F32T8/25W	1	100%	25	24	0.22	0.10	0.99	0.91	0.84	5%	11%	<1.7	32F
	1	30%	12	13	0.11	0.06	0.99	0.83	0.23	10%	21%	<1.7	32F
F25T8	1	100%	25	24	0.21	0.10	0.99	0.92	0.9	5%	11%	<1.7	0F
	1	30%	9	10	0.08	0.05	0.98	0.77	0.17	10%	25%	<1.7	32F
F17T8	1	100%	18	18	0.16	0.08	0.99	0.87	.95	10%	14%	<1.7	0F
	1	30%	10	10	0.09	0.05	0.98	0.78	.21	10%	25%	<1.7	32F
F15T8	1	100%	15	15	0.13	0.07	0.99	0.84	.92	10%	17%	<1.7	0F
	1	30%	7	8	0.06	0.04	0.97	0.68	.38	12%	32%	<1.7	32F
F36T8	1	100%	25	25	0.22	0.10	0.99	0.92	.88	5%	11%	<1.7	32F
	1	30%	14	13	0.11	0.06	0.99	0.94	.18	10%	20%	<1.7	32F

Safety and performance

UL Type 1 Outdoor UL Type HL ANSI - C82.11 Cons 2002, ANSI - C62.41 - 1991 Product is compliant with material restriction requirements of RoHS

FCC – Part 18 (Class A) for EMI and RFI Non-Consumer Limits cUL Listed UL Type CC High Temperature Rated: Suitable for high temperature applications

70C max case temp 5 yr warranty or 90C max case temp 3 yr warranty NEMA Premium

See page E-1 for warranty information.

UltraStart® T8 Step Dimming Program Start Dimming Ballast
T8 Dimming Ballasts

68968-GE232-MVPS-L-S30

Ultrastart® Bi-level Dimming

Program Start Bi-level Dimming

2 or 1 F32T8 120-277V "L" .78 BF UltraStart® 100/30% Bi-level Switching

- UL Type CC Rating provides protection against arcing in electrical devices
- Bi-level Switching 100 to 30%
- Anti-striation Control for better light quality , with no striations
- UL 55C (131F) Ambient rating - High Temparature Protection Circuit
- Multi-Volt Technology handles voltage from 120-277
- Parallel Lamp operation

General characteristics

Ballast Type	Electronic-Dimming
Dimming Type	Step Dimming
Starting Method	Program Start
Lamp Wiring	Parallel
Line Voltage Regulation+/-	10%
Ambient Temperature (Max)	55° C (131° F)
Case Temperature(Max)	70° C (158° F)
Ballast Factor	.78 to .20
Power Factor Correction	Active
Sound Rating	A
Enclosure Type	Metal
Additional Info	No PCB'sAnti-striation control, Unviversal voltage inherent thermal protection

Electrical characteristics

Supply Current Frequency (MIN)	50/60 Hz

Order information

10 Pack	Pallet Pack	DIY Pack	IP Pack
68968			

Dimensions

Wiring diagram - LFL- 2N/L S30 – see example on Page 12-27	
Case dimensions - Ref Drawing - A – see Page 12-29	
Length (L)	9.5 in (241mm)
Width (W)	1.7 in (43mm)
Height (H)	1.2 in (31mm)
Mounting dimensions	
Mount Length	8.9 in (226mm)
Mount Width	1.18 in (30mm
Mount Slots (MS)	.3 in (8mm)
Weight	1.47
Exit Type	Side
Remote Mounting Distance to lamp (F32T8)	8 Ft
Remote Mounting Wire gage	18 AWG
Lead lengths	
Black	25.0 in (635mm)
Blue	33.0 in (864mm)
Red	33.0 in (864mm)
White	25.0 in (635mm)
Yellow	47.0 in (1194mm)

Specifications by lamp and wattage

Lamps		Light Output	Input Watts		UL Nominal line Amps		Power Factor		Ballast	Harmonic Total		Crest	Min Starting
Type	#		120V	277V	120V	277V	120V	277V	Factor	120V	277V	Factor	Temp
F32T8 /U	2	100%	52	51	0.46	0.20	1.00	0.97	0.78	5%	10%	<1.7	0F
	2	30%	19	20	0.11	0.08	0.99	0.88	0.2	10%	19%	<1.7	32F
	1	100%	36	36	0.32	0.14	1.00	0.94	0.96	5%	10%	<1.7	0F
	1	30%	15	16	0.13	0.07	0.99	0.84	0.29	10%	23%	<1.7	32F
F32T8/WM	2	100%	51	50	0.44	0.19	1.00	0.97	0.78	5%	5%	<1.7	32F
	2	30%	19	20	0.17	0.08	0.99	0.88	0.18	10%	19%	<1.7	32F
	1	100%	34	33	0.29	0.13	1.00	0.94	0.96	10%	11%	<1.7	32F
	1	30%	15	16	0.13	0.07	0.99	0.84	0.29	10%	23%	<1.7	32F
F28T8	2	100%	47	47	0.42	0.18	1.00	0.96	0.8	5%	10%	<1.7	32F
	2	30%	18	19	0.16	0.08	0.99	0.87	.18	10%	20%	<1.7	32F
	1	100%	32	32	0.28	0.13	1.00	0.93	.98	5%	12%	<1.7	32F
	1	30%	14	15	0.13	0.07	0.99	0.83	.27	10%	24%	<1.7	32F
F32T8/25W	2	100%	45	44	0.39	0.17	1.00	0.96	.77	5%	10%	<1.7	32F
	2	30%	19	19	0.16	0.08	0.99	0.88	0.23	10%	20%	<1.7	32F
	1	100%	29	30	0.26	0.12	1.00	0.92	0.94	10%	12%	<1.7	32F
	1	30%	14	15	0.13	0.07	0.99	0.83	0.31	10%	24%	<1.7	32F
F25T8	2	100%	43	42	0.38	0.16	1.00	0.96	0.82	5%	10%	<1.7	0F
	2	30%	18	18	0.15	0.08	0.99	0.87	0.11	10%	11%	<1.7	32F
	1	100%	30	29	0.25	0.12	1.00	0.92	1.01	10%	13%	<1.7	0F
	1	30%	15	16	0.13	0.07	0.99	0.84	0.22	10%	23%	<1.7	32F
F17T8	2	100%	32	32	0.28	0.13	1.00	0.93	.84	10%	12%	<1.7	0F
	2	30%	15	15	0.13	0.07	0.99	0.84	.15	10%	23%	<1.7	32F
	1	100%	22	23	0.20	0.10	0.99	0.89	1.02	10%	16%	<1.7	0F
	1	30%	12	13	0.11	0.06	0.98	0.79	.21	11%	28%	<1.7	32F
F15T8	2	100%	26	27	0.23	0.11	1.00	0.91	.82	10%	14%	<1.7	0F
	2	30%	12	12	0.10	0.06	0.98	0.77	.32	12%	29%	<1.7	32F
	1	100%	19	19	0.16	0.08	0.99	0.85	1.02	10%	19%	<1.7	0F
	1	30%	10	10	0.09	0.05	0.97	0.73	.42	14%	32%	<1.7	32F
F36T8	2	100%	46	45	0.40	0.17	1.00	0.96	.78	5%	10%	<1.7	32F
	2	30%	19	19	0.17	0.08	0.99	0.88	.18	10%	19%	<1.7	32F
	1	100%	31	30	0.27	0.12	1.00	0.93	.96	10%	12%	<1.7	32F
	1	30%	14	15	0.13	0.07	0.99	0.83	.29	10%	24%	<1.7	32F
F40T8	1	100%	40	40	0.35	0.16	1.00	0.95	.93	5%	10%	<1.7	32F
	1	30%	17	19	0.15	0.08	0.99	0.87	.27	10%	20%	<1.7	32F

Safety and performance

UL Type 1 Outdoor UL Type HL ANSI - C82.11 Cons 2002, ANSI - C62.41 - 1991 Product is compliant with material restriction requirements of RoHS

FCC – Part 18 (Class A) for EMI and RFI Non-Consumer Limits cUL Listed UL Type CC High Temperature Rated: Suitable for high temperature applications

70C max case temp 5 yr warranty or 90C max case temp 3 yr warranty NEMA Premium

See page E-1 for warranty information.

UltraStart® T8 Step Dimming Program Start Dimming Ballast
T8 Dimming Ballasts

68967-GE232-MVPS-N-S30

Ultrastart® Bi-level Dimming

Program Start Bi-level Dimming

2 or 1 F32T8 120-277V "N" .88 BF UltraStart® 100/30% Bi-level Switching

- UL Type CC Rating provides protection against arcing in electrical devices
- Bi-level Switching 100 to 30%
- Anti-striation Control for better light quality , with no striations
- UL 55C (131F) Ambient rating - High Temperature Protection Circuit
- Multi-Volt Technology handles voltage from 120-277
- Parallel Lamp operation

General characteristics

Ballast Type	Electronic-Dimming
Dimming Type	Step Dimming
Starting Method	Program Start
Lamp Wiring	Parallel
Line Voltage Regulation+/-	10%
Ambient Temperature (Max)	55° C (131° F)
Case Temperature(Max)	70° C (158° F)
Ballast Factor	.88 to .25
Power Factor Correction	Active
Sound Rating	A
Enclosure Type	Metal
Additional Info	No PCB'sAnti-striation control, Universal voltage inherent thermal protection

Electrical characteristics

Supply Current Frequency (MIN)	50/60 Hz

Order information

10 Pack	Pallet Pack	DIY Pack	IP Pack
68967			

Dimensions

Wiring diagram-LFL- 2N/L S30 – see example on Page 12-27	
Case dimensions-Ref Drawing -A – see Page 12-29	
Length (L)	9.5 in (241mm)
Width (W)	1.7 in (43mm)
Height (H)	1.2 in (31mm)
Mounting dimensions	
Mount Length	8.9 in (226mm)
Mount Width	1.18 in (30mm
Mount Slots (MS)	.3 in (8mm)
Weight	1.47
Exit Type	Side
Remote Mounting Distance to lamp (F32T8)	8 Ft
Remote Mounting Wire gage	18 AWG
Lead lengths	
Black	25.0 in (635mm)
Blue	33.0 in (864mm)
Red	33.0 in (864mm)
White	25.0 in (635mm)
Yellow	47.0 in (1194mm)

Specifications by lamp and wattage

Lamps			Input Watts		UL Nominal Line Amps		Power Factor		Ballast Factor	Harmonic Total		Crest Factor	Min Starting Temp
Type	#	Light Output	120V	277V	120V	277V	120V	277V		120V	277V		
F32T8 /U	2	100%	59	57	0.51	0.22	0.97	0.96	0.88	5%	10%	<1.7	0F
	2	30%	24	25	0.22	0.10	0.99	0.91	0.25	10%	17%	<1.7	32F
	1	100%	39	39	0.34	0.15	0.99	0.94	1.13	5%	12%	<1.7	0F
	1	30%	20	20	0.17	0.08	0.99	0.88	0.39	10%	20%	<1.7	32F
F32T8/WM	2	100%	55	53	0.48	0.21	1.00	0.97	0.88	5%	10%	<1.7	32F
	2	30%	23	24	0.21	0.10	0.99	0.91	0.23	10%	18%	<1.7	32F
	1	100%	36	36	0.32	0.14	1.00	0.94	1.13	5%	13%	<1.7	32F
	1	30%	19	19	0.17	0.08	0.99	0.88	0.39	10%	21%	<1.7	32F
F28T8	2	100%	51	50	0.45	0.19	1.00	0.97	0.87	5%	10%	<1.7	32F
	2	30%	22	23	0.20	0.09	0.99	0.90	.27	10%	18%	<1.7	32F
	1	100%	34	34	0.30	0.13	1.00	0.94	1.11	5%	14%	<1.7	32F
	1	30%	18	18	0.16	0.08	0.99	0.87	.44	10%	22%	<1.7	32F
F32T8/25W	2	100%	49	48	0.42	0.18	1.00	0.96	.84	5%	10%	<1.7	32F
	2	30%	22	23	0.20	0.10	0.99	0.91	0.31	10%	18%	<1.7	32F
	1	100%	32	32	0.29	0.13	1.00	0.93	1.07	10%	14%	<1.7	32F
	1	30%	17	18	0.16	0.08	0.99	0.87	0.43	10%	22%	<1.7	32F
F25T8	2	100%	46	45	0.41	0.18	1.00	0.96	0.94	10%	11%	<1.7	0F
	2	30%	21	21	0.19	0.09	0.99	0.89	0.32	10%	20%	<1.7	32F
	1	100%	31	31	0.28	0.13	1.00	0.93	1.14	10%	15%	<1.7	0F
	1	30%	18	19	0.16	0.08	0.99	0.87	0.37	10%	21%	<1.7	32F
F17T8	2	100%	35	34	0.30	0.14	1.00	0.94	.95	5%	13%	<1.7	0F
	2	30%	17	17	0.15	0.08	0.99	0.86	.15	10%	23%	<1.7	32F
	1	100%	24	24	0.21	0.10	0.99	0.89	1.14	10%	18%	<1.7	0F
	1	30%	15	15	0.13	0.07	0.99	0.83	.36	10%	24%	<1.7	32F
F15T8	2	100%	28	28	0.25	0.12	1.00	0.92	.92	10%	15%	<1.7	0F
	2	30%	13	13	0.11	0.06	0.98	0.79	.32	11%	29%	<1.7	32F
	1	100%	21	21	0.18	0.09	0.99	0.88	1.15	10%	19%	<1.7	0F
	1	30%	11	11	0.09	0.06	0.98	0.75	.45	12%	32%	<1.7	32F
F36T8	2	100%	50	49	0.43	0.19	1.00	0.97	.88	5%	10%	<1.7	32F
	2	30%	24	24	0.21	0.10	0.99	0.91	.23	10%	18%	<1.7	32F
	1	100%	33	33	0.29	0.13	1.00	0.93	1.13	10%	14%	<1.7	32F
	1	30%	18	19	0.16	0.08	0.99	0.88	.39	10%	21%	<1.7	32F
F40T8	1	100%	45	44	0.39	0.17	1.00	0.96	1.04	5%	11%	<1.7	32F
	1	30%	24	24	0.21	0.10	0.99	0.91	.42	10%	18%	<1.7	32F

Safety and performance

UL Type 1 Outdoor UL Type HL ANSI - C82.11 Cons 2002, ANSI - C62.41 - 1991 Product is compliant with material restriction requirements of RoHS

FCC – Part 18 (Class A) for EMI and RFI Non-Consumer Limits cUL Listed UL Type CC High Temperature Rated: Suitable for high temperature applications

70C max case temp 5 yr warranty or 90C max case temp 3 yr warranty NEMA Premium

See page E-1 for warranty information.

UltraMax® Bi-Level Dimming & Load Shed Dimming Instant Start High-Efficiency
T8 Dimming Ballasts

73233 – GE232MAX90-S60

UltraMax® Bi-Level Dimming
Instant Start High-Efficiency

2 or 1 – F32T8 120 to 277 "H" 1.18 BF UltraMax® 100/60% step dim

- Bi-Level Switching 100 to 60%
- Anti-Striation Control for better light quality, with no striations.
- UL 55C Ambient Rating - HighTemperature Protection Circuit
- Multi-Voltage Technology handles voltage from 120 to 277V
- UL Type CC Rating provides protection against arcing in electrical devices.
- Cold temperature -22F Minimum Starting Temperature

General characteristics

Ballast Type	Electronic - Dimming
Dimming Type	Continuous
Starting Method	Instant start
Lamp Wiring	Parallel
Line Voltage Regulation (+/-)	10 %
Ambient Temperature (MAX)	55° C (131° F)
Case Temperature (MAX)	70° C (158° F)
Ballast Factor	High (1.18)
Power Factor Correction	Active
Sound Rating	A (20-24 decibels)
Enclosure Type	Metal
Additional Info	No PCBs, Anti-striation control

Electrical characteristics

Supply Current Frequency (MIN)	60 Hz

Order information

10 Pack	Pallet Pack	DIY Pack	IP Pack
73233			

Dimensions

Wiring diagram - LFL -2H S60– see example on Page 12-27	
Case dimensions- Ref Drawing -A – see Page 12-29	
Length (L)	9.5 in (241 mm)
Width (W)	1.7 in (43 mm)
Height (H)	1.18 in (30 mm)
Mounting dimensions	
Mount Length (M)	8.9 in (226 mm)
Mount Width (X or F)	1.18 in (30 mm)
Mount Slots (MS)	0.3 in (8 mm)
Weight	1.40 lbs
Exit Type	Side
Remote Mounting Distance to Lamp (F32T8)	18 ft
Remote Mounting Wire Gauge	18 AWG
Lead lengths	**Length (± 1 in.)**
Black	25.0 in (635 mm)
Blue	34.0 in (864 mm)
Red	34.0 in (864 mm)
White	25.0 in (635 mm)
Yellow	41.0 in (1041 mm)

Specifications by lamp and wattage

Lamp	Light Level	# of Lamps	Line Volts	System Watts	Nom. Line Current	System Ballast Factor	Ballast Efficacy Factor	Power Factor % (>=)	Crest Factor (<=)	THD% (<=)	Min. Starting Temp (°F/°C)
	100%	2	120	75	0.63 A	1.18	1.57	99	1.4	10	-22/-30
	100%	2	277	74	0.27 A	1.18	1.59	97	1.4	10	-22/-30
	60%	2	120	44	0.37 A	0.71	1.61	99	1.4	10	-22/-30
	60%	2	277	44	0.17 A	0.71	1.61	94	1.4	17	-22/-30
	100%	1	120	47	0.39 A	1.38	2.94	99	1.4	10	-22/-30
	100%	1	277	47	0.18 A	1.38	2.94	97	1.4	15	-22/-30
	60%	1	120	40	0.34 A	1.26	3.15	99	1.4	10	-22/-30
F32T8	60%	1	277	40	0.15 A	1.26	3.15	93	1.4	18	-22/-30
	100%	2	120	69	0.58 A	1.18	1.71	99	1.4	10	60/16
	100%	2	277	68	0.16 A	0.74	1.09	94	1.4	17	60/16
	60%	2	120	43	0.36 A	0.74	1.72	99	1.4	10	60/16
	60%	2	277	43	0.16 A	0.74	1.72	94	1.4	17	60/16
	100%	1	120	43	0.36 A	1.37	3.19	99	1.4	10	60/16
	100%	1	277	43	0.16 A	1.37	3.19	96	1.4	17	60/16
	60%	1	120	39	0.33 A	1.28	3.28	99	1.4	10	60/16
F32T8/WM	60%	1	277	39	0.15 A	1.28	3.28	96	1.4	18	60/16
	100%	2	120	64	0.53 A	1.18	1.84	99	1.4	10	-22/-30
	100%	2	277	63	0.23 A	1.18	1.87	96	1.4	13	-22/-30
	60%	2	120	43	0.36 A	0.76	1.77	99	1.4	10	-22/-30
	60%	2	277	43	0.16 A	0.76	1.77	93	1.4	17	-22/-30
	100%	1	120	40	0.33 A	1.35	3.38	99	1.4	10	-22/-30
	100%	1	277	40	0.15 A	1.35	3.38	96	1.4	18	-22/-30
	60%	1	120	37	0.31 A	1.32	3.57	99	1.4	10	-22/-30
F28T8	60%	1	277	37	0.14 A	1.32	3.57	93	1.4	19	-22/-30
	100%	2	120	59	0.49 A	1.18	2.00	99	1.4	10	60/16
	100%	2	277	57	0.21 A	1.18	2.07	96	1.4	16	60/16
	60%	2	120	43	0.36 A	0.78	1.81	99	1.4	10	60/16
	60%	2	277	43	0.16 A	0.78	1.81	93	1.4	17	60/16
	100%	1	120	36	0.31 A	1.35	3.75	99	1.4	10	60/16
	100%	1	277	36	0.14 A	1.35	3.75	95	1.4	19	60/16
	60%	1	120	34	0.29 A	1.33	3.91	99	1.4	10	60/16
F32T8/25W	60%	1	277	34	0.13 A	1.33	3.91	93	1.4	22	60/16
	100%	2	120	42	0.35 A	1.17	2.79	99	1.4	10	-22/-30
	100%	2	277	42	0.16 A	1.17	2.79	96	1.4	17	-22/-30
	60%	2	120	38	0.32 A	1.11	2.92	99	1.4	10	-22/-30
	60%	2	277	38	0.14 A	1.11	2.92	96	1.4	18	-22/-30
	100%	1	120	27	0.23 A	1.37	5.07	99	1.4	11	-22/-30
	100%	1	277	27	0.11 A	1.37	5.07	92	1.4	25	-22/-30
	60%	1	120	26	0.21 A	1.36	5.23	99	1.4	12	-22/-30
F17T8	60%	1	277	26	0.10 A	1.36	5.24	92	1.4	30	-22/-30
	100%	1	120	55	0.43 A	1.28	2.33	99	1.4	10	-22/-30
	100%	1	277	55	0.20 A	1.28	2.33	97	1.5	13	-22/-30
	60%	1	120	40	0.34 A	1.13	2.82	99	1.4	10	-22/-30
F40T8	60%	1	277	40	0.15 A	1.13	2.82	96	1.4	18	-22/-30

Safety and performance

UL Type 1 Outdoor UL Type HL ANSI - C82.11 Cons 2002, ANSI - C62.41 - 1991 Product is compliant with material restriction requirements of RoHS

FCC – Part 18 (Class A) for EMI and RFI Non-Consumer Limits cUL Listed UL Type CC High Temperature Rated: Suitable for high temperature applications

70C max case temp 5 yr warranty or 90C max case temp 3 yr warranty NEMA Premium

See page E-1 for warranty information.

UltraMax® Bi-Level Dimming & Load Shed Dimming Instant Start High-Efficiency
T8 Dimming Ballasts

73231 – GE332MAX90-S60

UltraMax® Bi-Level Dimming
Instant Start High-Efficiency
3 – F32T8 120 to 277 "H" 1.18 BF UltraMax® 100/60% step dim

- Bi-Level Switching 100 to 60%
- Anti-Striation Control for better light quality, with no striations.
- UL 55C Ambient Rating - HighTemperature Protection Circuit
- Multi-Voltage Technology handles voltage from 120 to 277V
- UL Type CC Rating provides protection against arcing in electrical devices.
- Cold temperature -22F Minimum Starting Temperature

General characteristics

Ballast Type	Electronic - Dimming
Dimming Type	Step dimming
Starting Method	Instant start
Lamp Wiring	Parallel
Line Voltage Regulation (+/-)	10 %
Ambient Temperature (MAX)	55° C (131° F)
Case Temperature (MAX)	70° C (158° F)
Ballast Factor	High (1.18)
Power Factor Correction	Active
Enclosure Type	Metal
Additional Info	Anti-striation control, Universal voltage, Inherent thermal protection

Electrical characteristics

Supply Current Frequency (MIN)	60 Hz

Order information

10 Pack	Pallet Pack	DIY Pack	IP Pack
73231			

Dimensions

Wiring diagram - LFL -3H S60 – see example on Page 12-27	
Case dimensions- Ref Drawing -A – see Page 12-29	
Length (L)	9.5 in (241 mm)
Width (W)	1.7 in (43 mm)
Height (H)	1.18 in (30 mm)
Mounting dimensions	
Mount Length (M)	8.9 in (226 mm)
Mount Width (X or F)	1.18 in (30 mm)
Mount Slots (MS)	0.3 in (8 mm)
Weight	1.40 lbs
Exit Type	Side
Remote Mounting Distance to Lamp (F32T8)	18 ft
Remote Mounting Wire Gauge	18 AWG
Lead lengths	**Length (± 1 in.)**
Black	25.0 in (635mm)
Blue	34.0 in (864mm)
Red	34.0 in (864mm)
White	25.0 in (635mm)
Yellow	41.0 in (1041 mm)

Specifications by lamp and wattage

Lamp	Light Level	# of Lamps	Line Volts	System Watts	Nom. Line Current	System Ballast Factor	Ballast Efficacy Factor	Power Factor % (>=)	Crest Factor (<=)	THD% (<=)	Min. Starting Temp (°F/°C)
	100%	3	120	113	0.94 A	1.18	1.04	99	1.4	10	-22/-30
	100%	3	277	110	0.40 A	1.18	1.07	97	1.4	10	-22/-30
	60%	3	120	66	0.55 A	0.71	1.08	99	1.4	10	-22/-30
	60%	3	277	66	0.25 A	0.71	1.08	94	1.4	17	-22/-30
	100%	2	120	86	0.72 A	1.29	1.50	99	1.4	10	-22/-30
	100%	2	277	85	0.32 A	1.29	1.52	97	1.4	13	-22/-30
	60%	2	120	61	0.51 A	0.99	1.62	99	1.4	10	-22/-30
F32T8	60%	2	277	61	0.23 A	0.99	1.62	93	1.4	18	-22/-30
	100%	3	120	103	0.86 A	1.18	1.15	99	1.4	10	60/16
	100%	3	277	101	0.37 A	1.18	1.17	97	1.4	10	60/16
	60%	3	120	66	0.55 A	0.75	1.14	99	1.4	10	60/16
	60%	3	277	62	0.23 A	0.75	1.21	96	1.4	17	60/16
	100%	2	120	79	0.66 A	1.26	1.59	99	1.4	10	60/16
	100%	2	277	78	0.29 A	1.26	1.62	96	1.4	16	60/16
	60%	2	120	63	0.52 A	1.05	1.67	99	1.4	10	60/16
F32T8/WM	60%	2	277	63	0.24 A	1.05	1.67	93	1.4	18	60/16
	100%	3	120	95	0.79 A	1.18	1.24	99	1.4	10	60/16
	100%	3	277	93	0.34 A	1.18	1.27	96	1.4	13	60/16
	60%	3	120	66	0.56 A	0.75	1.14	99	1.4	10	60/16
	60%	3	277	65	0.24 A	0.75	1.15	93	1.4	17	60/16
	100%	2	120	72	0.61 A	1.26	1.75	99	1.4	10	-22/-30
	100%	2	277	71	0.27 A	1.26	1.77	96	1.4	16	-22/-30
	60%	2	120	64	0.53 A	1.05	1.64	99	1.4	10	-22/-30
F28T8	60%	2	277	63	0.24 A	1.05	1.67	93	1.4	18	-22/-30
	100%	3	120	91	0.77 A	1.18	1.30	99	1.4	10	60/16
	100%	3	277	89	0.32 A	1.18	1.33	96	1.4	16	60/16
	60%	3	120	67	0.56 A	0.80	1.19	99	1.4	10	60/16
	60%	3	277	66	0.25 A	0.80	1.21	93	1.4	17	60/16
	100%	2	120	67	0.56 A	1.26	1.88	99	1.4	10	60/16
	100%	2	277	66	0.25 A	1.26	1.91	96	1.4	16	60/16
	60%	2	120	64	0.53 A	1.05	1.64	99	1.4	10	60/16
F32T8/25W	60%	2	277	63	0.24 A	1.05	1.67	93	1.4	17	60/16
	100%	3	120	62	0.52 A	1.15	1.85	99	1.4	10	-22/-30
	100%	3	277	61	0.23 A	1.15	1.89	96	1.4	17	-22/-30
	60%	3	120	59	0.50 A	1.14	1.93	99	1.4	10	-22/-30
	60%	3	277	58	0.22 A	1.14	1.97	96	1.4	17	-22/-30
	100%	2	120	48	0.40 A	1.27	2.65	99	1.4	10	-22/-30
	100%	2	277	48	0.19 A	1.25	2.60	94	1.4	19	-22/-30
	60%	2	120	47	0.40 A	1.25	2.66	99	1.4	10	-22/-30
F17T8	60%	2	277	47	0.18 A	1.25	2.66	94	1.4	19	-22/-30
	100%	2	120	102	0.85 A	1.22	1.20	99	1.4	10	-22/-30
	100%	2	277	100	0.37 A	1.22	1.22	98	1.4	10	-22/-30
	60%	2	120	61	0.51 A	0.68	1.11	99	1.4	10	-22/-30
F40T8	60%	2	277	61	0.23 A	0.68	1.11	96	1.4	16	-22/-30

Safety and performance

UL Type 1 Outdoor UL Type HL ANSI - C82.11 Cons 2002, ANSI - C62.41 - 1991 Product is compliant with material restriction requirements of RoHS

FCC – Part 18 (Class A) for EMI and RFI Non-Consumer Limits cUL Listed UL Type CC High Temperature Rated: Suitable for high temperature applications

70C max case temp 5 yr warranty or 90C max case temp 3 yr warranty NEMA Premium

See page E-1 for warranty information.

UltraMax® Bi-Level Dimming & Load Shed Dimming Instant Start High-Efficiency
T8 Dimming Ballasts

73229 – GE432MAX90-S60

UltraMax® Bi-Level Dimming
Instant Start High-Efficiency

4 – F32T8 120 to 277 "H" 1.18 BF UltraMax® 100/60% step dim

- Bi-Level Switching 100 to 60%
- Anti-Striation Control for better light quality, with no striations.
- UL 55C Ambient Rating - HighTemperature Protection Circuit
- Multi-Voltage Technology handles voltage from 120 to 277V
- UL Type CC Rating provides protection against arcing in electrical devices.
- Cold temperature -22F Minimum Starting Temperature

General characteristics

Ballast Type	Electronic - Dimming
Dimming Type	Step dimming
Starting Method	Instant start
Lamp Wiring	Parallel
Line Voltage Regulation (+/-)	10 %
Ambient Temperature (MAX)	55° C (131° F)
Case Temperature (MAX)	70° C (158° F)
Ballast Factor	High (1.18)
Power Factor Correction	Active
Enclosure Type	Metal
Additional Info	Anti-striation control, Universal voltage, Inherent thermal protection

Electrical characteristics

Supply Current Frequency (MIN)	60 Hz

Order information

10 Pack	Pallet Pack	DIY Pack	IP Pack
73231			

Dimensions

Wiring diagram - LFL -4H S60 – see example on Page 12-26	
Case dimensions- Ref Drawing -A – see Page 12-29	
Length (L)	9.5 in (241 mm)
Width (W)	1.7 in (43 mm)
Height (H)	1.18 in (30 mm)
Mounting dimensions	
Mount Length (M)	8.9 in (226 mm)
Mount Width (X or F)	1.18 in (30 mm)
Mount Slots (MS)	0.3 in (8 mm)
Weight	1.40 lbs
Exit Type	Side
Remote Mounting Distance to Lamp (F32T8)	18 ft
Remote Mounting WireGauge	18 AWG
Lead lengths Qty Exit	**Length (± 1 in.)**
Black	25.0 in (635 mm)
Blue	34.0 in (864 mm)
Red	34.0 in (864 mm)
White	25.0 in (635 mm)
Yellow	41.0 in (1041 mm)

Specifications by lamp and wattage

Lamp	Light Level	# of Lamps	Line Volts	System Watts	Nom. Line Current	System Ballast Factor	Ballast Efficacy Factor	Power Factor % (>=)	Crest Factor (<=)	THD% (<=)	Min. Starting Temp (°F/°C)
	100%	4	120	149	1.25 A	1.18	0.79	99	1.4	10	-22/-30
	100%	4	277	146	0.54 A	0.71	0.49	97	1.4	10	-22/-30
	60%	4	120	88	0.74 A	0.71	0.81	99	1.4	10	-22/-30
	60%	4	277	87	0.34 A	0.71	0.82	94	1.4	17	-22/-30
	100%	3	120	119	1.02 A	1.28	1.08	99	1.4	10	-22/-30
	100%	3	277	116	0.46 A	1.28	1.10	97	1.4	13	-22/-30
	60%	3	120	75	0.63 A	0.78	1.04	99	1.4	10	-22/-30
F32T8	60%	3	277	75	0.28 A	0.78	1.04	93	1.4	18	-22/-30
	100%	4	120	136	1.14 A	0.73	0.54	99	1.4	10	60/16
	100%	4	277	133	0.49 A	1.18	0.89	97	1.4	10	60/16
	60%	4	120	83	0.70 A	0.73	0.88	99	1.4	10	60/16
	60%	4	277	83	0.31 A	0.73	0.88	94	1.4	17	60/16
	100%	3	120	113	0.95 A	1.25	1.11	99	1.4	10	60/16
	100%	3	277	112	0.41 A	1.25	1.12	96	1.4	16	60/16
	60%	3	120	71	0.59 A	0.79	1.11	99	1.4	10	60/16
F32T8/WM	60%	3	277	71	0.27 A	0.79	1.11	93	1.4	18	60/16
	100%	4	120	127	1.07 A	1.18	0.93	99	1.4	10	-22/-30
	100%	4	277	125	0.48 A	1.18	0.94	96	1.4	13	-22/-30
	60%	4	120	78	0.65 A	0.74	0.95	99	1.4	10	-22/-30
	60%	4	277	78	0.29 A	0.74	0.95	93	1.4	17	-22/-30
	100%	3	120	103	0.86 A	1.24	1.20	99	1.4	10	-22/-30
	100%	3	277	102	0.38 A	1.24	1.22	96	1.4	16	-22/-30
	60%	3	120	68	0.26 A	0.80	1.18	99	1.4	10	-22/-30
F28T8	60%	3	277	68	0.26 A	0.80	1.18	93	1.4	18	-22/-30
	100%	4	120	116	0.96 A	1.18	1.02	99	1.4	10	60/16
	100%	4	277	114	0.43 A	1.18	1.04	96	1.4	16	60/16
	60%	4	120	75	0.63 A	0.75	1.00	99	1.4	10	60/16
	60%	4	277	75	0.28 A	0.75	1.00	93	1.4	17	60/16
	100%	3	120	96	0.80 A	1.24	1.29	99	1.4	10	60/16
	100%	3	277	95	0.35 A	1.24	1.31	97	1.4	16	60/16
	60%	3	120	66	0.55 A	0.80	1.21	99	1.4	10	60/16
F32T8/25W	60%	3	277	66	0.49 A	0.80	1.21	93	1.4	17	60/16
	100%	4	120	81	0.69 A	1.17	1.44	99	1.4	10	-22/-30
	100%	4	277	80	0.32 A	1.17	1.46	96	1.4	14	-22/-30
	60%	4	120	64	0.54 A	0.95	1.48	99	1.4	10	-22/-30
	60%	4	277	64	0.25 A	0.95	1.48	94	1.4	17	-22/-30
	100%	3	120	62	0.58 A	1.25	2.02	99	1.4	10	-22/-30
	100%	3	277	62	0.24 A	1.25	2.02	95	1.4	18	-22/-30
	60%	3	120	59	0.49 A	1.24	2.10	99	1.4	10	-22/-30
F17T8	60%	3	277	59	0.23 A	1.24	2.10	93	1.5	18	-22/-30
	100%	3	120	146	1.22 A	1.22	0.84	99	1.4	10	-22/-30
	100%	3	277	143	0.53 A	1.22	0.85	97	1.4	10	-22/-30
	60%	3	120	84	0.70 A	0.66	0.79	99	1.4	10	-22/-30
F40T8	60%	3	277	83	0.31 A	0.66	0.80	96	1.4	14	-22/-30

Safety and performance

UL Type 1 Outdoor UL Type HL ANSI - C82.11 Cons 2002, ANSI - C62.41 - 1991 Product is compliant with material restriction requirements of RoHS

FCC – Part 18 (Class A) for EMI and RFI Non-Consumer Limits cUL Listed UL Type CC High Temperature Rated: Suitable for high temperature applications

70C max case temp 5 yr warranty or 90C max case temp 3 yr warranty NEMA Premium

See page E-1 for warranty information.

UltraMax® Bi-Level Dimming & Load Shed Dimming Instant Start High-Efficiency T8 Dimming Ballasts

71497 – GE632MAX-H90-S60

UltraMax® Bi-Level Dimming
Instant Start High-Efficiency

6, 5, 4 – F32T8 120 to 277 "H" 1.18 BF UltraMax® 100/60% step dim

- Bi-Level Switching 100 to 60%
- Extreme 95% Electrical Efficiency
- UL 55C Ambient Rating - HighTemperature Protection Circuit
- Cold temperature -20F Minimum Starting Temperature

General characteristics

Ballast Type	Electronic - Dimming
Dimming Type	Step dimming
Starting Method	Instant start
Lamp Wiring	Parallel
Line Voltage Regulation (+/-)	10 %
Ambient Temperature (MAX)	55° C (131° F)
Case Temperature (MAX)	70° C (158° F)
Ballast Factor	High (1.18)
Power Factor Correction	Active
Sound Rating	A (20-24 decibels)
Enclosure Type	Metal
Additional Info	Anti-striation control, Universal voltage, Inherent thermal protection

Electrical characteristics

Supply Current Frequency (MIN)	60 Hz

Order information

10 Pack	Pallet Pack	DIY Pack	IP Pack
71497			

Dimensions

Wiring diagram - LFL -6H S60 – see example on Page 12-26	
Case dimensions- Ref Drawing -A – see Page 12-29	
Length (L)	11.75 in (299 mm)
Width (W)	1.7 in (43 mm)
Height (H)	1.18 in (30 mm)
Mounting dimensions	
Mount Length (M)	11.1 in (283 mm)
Mount Slots (MS)	0.3 in (8 mm)
Weight	3.10 lbs
Exit Type	Side
Remote Mounting Distance to Lamp (F32T8)	18 ft
Remote Mounting Wire Gauge	18 AWG
Lead lengths	**Length (± 1 in.)**
Black	25.0 in (635 mm)
Blue	34.0 in (864 mm)
Gray	25.0 in (635 mm)
Red	34.0 in (864 mm)
Yellow	41.0 in (1041 mm)
White	25.0 in (635 mm)

Specifications by lamp and wattage

Lamp	Light Level	# of Lamps	Line Volts	System Watts	Nom. Line Current	System Ballast Factor	Ballast Efficacy Factor	Power Factor % (>=)	Crest Factor (<=)	THD% (<=)	Min. Starting Temp (°F/°C)
	100%	6	120	221	1.94 A	1.18	0.53	99	1.4	10	-20/-29
	100%	6	277	215	0.82 A	1.18	0.55	97	1.4	10	-20/-29
	60%	6	120	133	1.13 A	0.71	0.53	99	1.4	1	-20/-29
	60%	6	277	132	0.53 A	0.71	0.54	94	1.4	17	-20/-29
	100%	5	120	197	1.73 A	1.25	0.63	99	1.4	10	-20/-29
	100%	5	277	192	0.73 A	1.25	0.65	97	1.4	13	-20/-29
	60%	5	120	123	1.04 A	0.77	0.63	99	1.4	10	-20/-29
F32T8	60%	5	277	122	0.49 A	0.77	0.63	93	1.4	18	-20/-29
	100%	6	120	205	1.80 A	1.18	0.58	99	1.4	10	60/16
	100%	6	277	200	0.76 A	1.18	0.59	97	1.4	10	60/16
	60%	6	120	128	1.09 A	0.71	0.55	99	1.4	10	60/16
	60%	6	277	127	0.51 A	0.71	0.56	94	1.4	17	60/16
	100%	5	120	182	1.60 A	1.23	0.68	99	1.4	10	60/16
	100%	5	277	178	0.68 A	1.23	0.69	96	1.4	16	60/16
	60%	5	120	121	1.03 A	0.82	0.68	99	1.4	10	60/16
F32T8/WM	60%	5	277	120	0.49 A	0.82	0.68	93	1.4	18	60/16
	100%	6	120	187	1.64 A	1.18	0.63	99	1.4	10	60/16
	100%	6	277	184	0.70 A	1.18	0.64	96	1.4	13	60/16
	60%	6	120	123	1.05 A	0.74	0.60	99	1.4	10	60/16
	60%	6	277	122	0.50 A	0.74	0.61	93	1.4	17	60/16
	100%	5	120	166	1.45 A	1.20	0.72	99	1.4	10	60/16
	100%	5	277	164	0.63 A	1.20	0.73	96	1.4	16	60/16
	60%	5	120								
F28T8	60%	5	277	118	0.48 A	0.86	0.73	93	1.4	18	60/16
	100%	6	120	178	1.57 A	1.18	0.66	99	1.4	10	60/16
	100%	6	277	176	0.68 A	1.18	0.67	96	1.4	16	60/16
	60%	6	120	122	1.03 A	0.70	0.57	99	1.4	10	60/16
F32T8/25W	60%	6	277	121	0.49 A	0.70	0.58	93	1.4	17	60/16
	100%	5	120	159	1.40 A	1.16	0.73	99	1.4	10	-20/-29
	100%	5	277	157	0.61 A	1.16	0.74	95	1.4	18	-20/-29
	60%	5	120	118	1.01 A	0.87	0.74	99	1.4	10	-20/-29
F25T8	60%	5	277	117	0.48 A	0.87	0.74	93	1.4	20	-20/-29
	100%	6	120	122	1.08 A	1.17	0.96	99	1.4	10	-20/-29
	100%	6	277	121	0.50 A	1.17	0.97	90	1.4	24	-20/-29
	60%	6	120	104	0.88 A	1.03	0.99	99	1.4	10	-20/-29
	60%	6	277	103	0.43 A	1.03	1.00	89	1.4	24	-20/-29
	100%	5	120	107	0.95 A	1.24	1.16	99	1.4	10	-20/-29
	100%	5	277	106	0.44 A	1.24	1.17	88	1.4	26	-20/-29
	60%	5	120	98	0.83 A	1.16	1.18	99	1.4	10	-20/-29
F17T8	60%	5	277	98	0.42 A	1.16	1.18	88	1.4	26	-20/-29
	100%	5	120	231	2.03 A	1.18	0.51	99	1.4	10	0/-18
	100%	5	277	225	0.86 A	1.18	0.52	97	1.4	10	0/-18
	60%	5	120	131	1.12 A	0.64	0.49	99	1.4	10	0/-18
F40T8	60%	5	277	130	0.53 A	0.64	0.49	94	1.4	17	0/-18

Safety and performance

UL Type 1 Outdoor UL Type HL ANSI - C82.11 Cons 2002, ANSI - C62.41 - 1991 Product is compliant with material restriction requirements of RoHS

FCC – Part 18 (Class A) for EMI and RFI Non-Consumer Limits cUL Listed UL Type CC High Temperature Rated: Suitable for high temperature applications

70C max case temp 5 yr warranty or 90C max case temp 3 yr warranty NEMA Premium

See page E-1 for warranty information.

UltraMax® Bi-Level Dimming & Load Shed Dimming Instant Start High-Efficiency
T8 Dimming Ballasts

73234 – GE232MAX90-V60

UltraMax® Load Shed Dimming
Instant Start High-Efficiency

2 or 1 – F32T8 120 to 277 "H" 1.18 BF UltraMax® 0-10V 100-60% dim

- Load Shed Variable Dimming 0-10V 100% to 60%
- Anti-Striation Control for better light quality, with no striations.
- UL 55C Ambient Rating - HighTemperature Protection Circuit
- Multi-Voltage Technology handles voltage from 120 to 277V
- UL Type CC Rating provides protection against arcing in electrical devices.
- Cold temperature -22F Minimum Starting Temperature

General characteristics

Ballast Type	Electronic - Dimming
Dimming Type	Continuous
Starting Method	Instant start
Lamp Wiring	Parallel
Line Voltage Regulation (+/-)	10 %
Ambient Temperature (MAX)	55° C (131° F)
Case Temperature(MAX)	70° C (158° F)
Ballast Factor	High (1.18)
Power Factor Correction	Active
Sound Rating	A (20-24 decibels)
Enclosure Type	Metal
Additional Info	No PCBs, Anti-striation control

Electrical characteristics

Supply Current Frequency (MIN)	60 Hz

Order information

10 Pack	Pallet Pack	DIY Pack	IP Pack
73234			

Dimensions

Wiring diagram - LFL -2H V60 – see example on Page 12-27	
Case dimensions- Ref Drawing -A – see Page 12-29	
Length (L)	9.5 in (241 mm)
Width (W)	1.7 in (43 mm)
Height (H)	1.18 in (30 mm)
Mounting dimensions	
Mount Length (M)	8.9 in (226 mm)
Mount Width (X or F)	1.18 in (30 mm)
Mount Slots (MS)	0.3 in (8 mm)
Weight	1.40 lbs
Exit Type	Side
Remote Mounting Distance to Lamp (F32T8)	18 ft
Remote Mounting Wire Gauge	18 AWG
Lead lengths	**Length (± 1 in.)**
Black	25.0 in (635 mm)
Blue	34.0 in (864 mm)
Gray	25.0 in (635 mm)
Red	34.0 in (864 mm)
Violet	25.0 in (635 mm)
White	25.0 in (635 mm)
Yellow	41.0 in (1041 mm)

Specifications by lamp and wattage

Lamp	Light Level	# of Lamps	Line Volts	System Watts	Nom. Line Current	System Ballast Factor	Ballast Efficacy Factor	Power Factor % (>=)	Crest Factor (<=)	THD% (<=)	Min. Starting Temp (°F/°C)
	100%	2	120	75	0.63 A	1.18	1.57	99	1.4	10	-22/-30
	100%	2	277	74	0.28 A	1.18	1.59	96	1.4	10	-22/-30
	60%	2	120	44	0.36 A	0.71	1.61	99	1.4	10	-22/-30
	60%	2	277	43	0.17 A	0.71	1.65	94	1.4	18	-22/-30
	100%	1	120	47	0.39 A	1.38	2.94	99	1.4	10	-22/-30
	100%	1	277	47	0.18 A	1.38	2.94	92	1.4	18	-22/-30
	60%	1	120	45	0.38 A	1.34	2.98	99	1.4	10	-22/-30
F32T8	60%	1	277	45	0.18 A	1.34	2.98	92	1.4	18	-22/-30
	100%	2	120	69	0.57 A	1.18	1.71	99	1.4	10	60/16
	100%	2	277	68	0.25 A	1.18	1.74	96	1.4	11	60/16
	60%	2	120	46	0.39 A	0.77	1.67	99	1.4	10	60/16
	60%	2	277	46	0.18 A	0.77	1.67	92	1.4	18	60/16
	100%	1	120	43	0.36 A	1.37	3.19	99	1.4	10	60/16
	100%	1	277	43	0.17 A	1.37	3.19	92	1.4	20	60/16
	60%	1	120	42	0.35 A	1.36	3.24	99	1.4	10	60/16
F32T8/WM	60%	1	277	42	0.17 A	1.36	3.24	91	1.4	21	60/16
	100%	2	120	63	0.53 A	1.18	1.87	99	1.4	10	-22/-30
	100%	2	277	62	0.24 A	1.18	1.90	95	1.4	13	-22/-30
	60%	2	120	46	0.39 A	0.79	1.72	99	1.4	10	-22/-30
	60%	2	277	46	0.18 A	0.79	1.72	92	1.4	19	-22/-30
	100%	1	120	39	0.33 A	1.35	3.46	99	1.4	10	-22/-30
	100%	1	277	39	0.16 A	1.35	3.46	90	1.4	26	-22/-30
	60%	1	120	38	0.32 A	1.34	3.53	99	1.4	10	-22/-30
F28T8	60%	1	277	38	0.16 A	1.34	3.53	90	1.4	26	-22/-30
	100%	2	120	59	0.48 A	1.18	2.00	99	1.4	10	60/16
	100%	2	277	57	0.22 A	1.18	2.07	94	1.4	16	60/16
	60%	2	120	46	0.38 A	0.81	1.76	99	1.4	10	60/16
	60%	2	277	46	0.18 A	0.81	1.76	92	1.4	19	60/16
	query	1	120	36	0.30 A	1.35	3.75	99	1.4	10	60/16
	query	1	277	36	0.15 A	1.35	3.75	88	1.4	26	60/16
	query	1	120	36	0.30 A	1.35	3.75	99	1.4	10	60/16
F32T8/25W	query	1	277	36	0.15 A	1.35	3.75	88	1.4	26	60/16
	100%	2	120	42	0.35 A	1.17	2.79	99	1.4	10	-22/-30
	100%	2	277	42	0.17 A	1.17	2.79	90	1.4	24	-22/-30
	60%	2	120	41	0.34 A	1.16	2.83	99	1.4	10	-22/-30
F17T8	60%	2	277	41	0.16 A	1.16	2.83	90	1.4	24	-22/-30
	100%	1	120	56	0.46 A	1.28	2.29	99	1.4	10	-22/-30
	100%	1	277	55	0.21 A	1.28	2.33	94	1.4	15	-22/-30
	60%	1	120	46	0.39 A	1.18	2.57	99	1.4	10	-22/-30
F40T8	60%	1	277	46	0.18 A	1.18	2.57	92	1.4	18	-22/-30

Safety and performance

UL Type 1 Outdoor UL Type HL ANSI - C82.11 Cons 2002, ANSI - C62.41 - 1991 Product is compliant with material restriction requirements of RoHS

FCC – Part 18 (Class A) for EMI and RFI Non-Consumer Limits cUL Listed UL Type CC High Temperature Rated: Suitable for high temperature applications

70C max case temp 5 yr warranty or 90C max case temp 3 yr warranty NEMA Premium

See page E-1 for warranty information.

UltraMax® Bi-Level Dimming & Load Shed Dimming Instant Start High-Efficiency
T8 Dimming Ballasts

73232 – GE332MAX90-V60

UltraMax® Load Shed Dimming
Instant Start High-Efficiency
3 – F32T8 120 to 277 "H" 1.18 BF UltraMax® 0-10V 100-60% dim

- Load Shed Variable Dimming 0-10V 100% to 60%
- Anti-Striation Control for better light quality, with no striations.
- UL 55C Ambient Rating - HighTemperature Protection Circuit
- Multi-Voltage Technology handles voltage from 120 to 277V
- UL Type CC Rating provides protection against arcing in electrical devices.
- Cold temperature -22F Minimum Starting Temperature

General characteristics

Ballast Type	Electronic - Dimming
Dimming Type	Continuous
Starting Method	Instant start
Lamp Wiring	Parallel
Line Voltage Regulation (+/-)	10 %
Ambient Temperature (MAX)	55° C (131° F)
Case Temperature (MAX)	70° C (158° F)
Ballast Factor	High (1.18)
Power Factor Correction	Active
Sound Rating	A (20-24 decibels)
Enclosure Type	Metal
Additional Info	No PCBs, Anti-striation control

Electrical characteristics

Supply Current Frequency (MIN)	60 Hz

Order information

10 Pack	Pallet Pack	DIY Pack	IP Pack
73232			

Dimensions

Wiring diagram - LFL -3H V60 – see example on Page 12-27	
Case dimensions- Ref Drawing -A – see Page 12-29	
Length (L)	9.5 in (241 mm)
Width (W)	1.7 in (43 mm)
Height (H)	1.18 in (30 mm)
Mounting dimensions	
Mount Length (M)	8.9 in (226 mm)
Mount Width (X or F)	1.18 in (30 mm)
Mount Slots (MS)	0.3 in (8 mm)
Weight	1.40 lbs
Exit Type	Side
Remote Mounting Distance to Lamp (F32T8)	18 ft
Remote Mounting Wire Gauge	18 AWG
Lead lengths	**Length (± 1 in.)**
Blue	34.0 in (864 mm)
Violet	25.0 in (635 mm)
Red	34.0 in (864 mm)
Yellow	41.0 in (1041 mm)
Black	25.0 in (635 mm)
White	25.0 in (635 mm)
Gray	25.0 in (635 mm)

Specifications by lamp and wattage

Lamp	Light Level	# of Lamps	Line Volts	System Watts	Nom. Line Current	System Ballast Factor	Ballast Efficacy Factor	Power Factor % (>=)	Crest Factor (<=)	THD% (<=)	Min. Starting Temp (°F/°C)
	100%	3	120	113	0.94 A	1.18	1.04	99	1.4	10	-22/-30
	100%	3	277	110	0.41 A	1.18	1.07	97	1.4	10	-22/-30
	60%	3	120	66	0.55 A	0.71	1.08	99	1.4	10	-22/-30
	60%	3	277	65	0.25 A	0.71	1.09	94	1.4	17	-22/-30
	100%	2	120	85	0.72 A	1.29	1.52	99	1.4	10	-22/-30
	100%	2	277	84	0.32 A	1.29	1.54	97	1.4	13	-22/-30
	60%	2	120	72	0.62 A	1.05	1.46	99	1.4	10	-22/-30
F32T8	60%	2	277	72	0.28 A	1.05	1.46	93	1.4	18	-22/-30
	100%	3	120	104	0.91 A	1.18	1.13	99	1.4	10	60/16
	100%	3	277	102	0.38 A	1.18	1.16	97	1.4	10	60/16
	60%	3	120	72	0.61 A	0.78	1.08	99	1.4	10	60/16
	60%	3	277	71	0.28 A	0.78	1.10	94	1.4	17	60/16
	100%	2	120	79	0.67 A	1.26	1.59	99	1.4	10	60/16
	100%	2	277	78	0.30 A	1.26	1.62	96	1.4	16	60/16
	60%	2	120	65	0.61 A	1.07	1.65	99	1.4	10	60/16
F32T8/WM	60%	2	277	65	0.27 A	1.07	1.65	93	1.4	18	60/16
	100%	3	120	95	0.81 A	1.18	1.24	99	1.4	10	60/16
	100%	3	277	94	0.35 A	1.18	1.26	96	1.4	13	60/16
	60%	3	120	71	0.64 A	0.87	1.23	99	1.4	10	60/16
	60%	3	277	70	0.28 A	0.87	1.24	93	1.4	17	60/16
	100%	2	120	73	0.61 A	1.26	1.73	99	1.4	10	-22/-30
	100%	2	277	72	0.27 A	1.26	1.75	95	1.4	16	-22/-30
	60%	2	120	68	0.57 A	1.10	1.62	99	1.4	10	-22/-30
F28T8	60%	2	277	67	0.25 A	1.10	1.64	93	1.4	18	-22/-30
	100%	3	120	91	0.77 A	1.18	1.30	99	1.4	10	60/16
	100%	3	277	89	0.33 A	1.18	1.33	96	1.4	16	60/16
	60%	3	120	71	0.63 A	0.89	1.25	99	1.4	10	60/16
	60%	3	277	70	0.28 A	0.89	1.27	93	1.4	17	60/16
	100%	2	120	69	0.57 A	1.26	1.83	99	1.4	10	60/16
	100%	2	277	68	0.26 A	1.26	1.85	95	1.4	17	60/16
	60%	2	120	64	0.54 A	1.15	1.80	99	1.4	10	60/16
F32T8/25W	60%	2	277	63	0.24 A	1.15	1.83	93	1.4	17	60/16
	100%	3	120	61	0.54 A	1.15	1.88	99	1.4	10	-22/-30
	100%	3	277	60	0.24 A	1.15	1.92	95	1.4	17	-22/-30
	60%	3	120	58	0.51 A	1.14	1.97	99	1.4	10	-22/-30
	60%	3	277	58	0.23 A	1.14	1.97	94	1.4	17	-22/-30
	100%	2	120	47	0.41 A	1.27	2.70	99	1.4	10	-22/-30
	100%	2	277	47	0.20 A	1.27	2.70	91	1.4	21	-22/-30
	60%	2	120	45	0.40 A	1.25	2.78	99	1.4	10	-22/-30
F17T8	60%	2	277	45	0.19 A	1.25	2.78	91	1.4	20	-22/-30
	100%	2	120	104	0.87 A	1.22	1.17	99	1.4	10	-22/-30
	100%	2	277	102	0.38 A	1.22	1.20	97	1.4	10	-22/-30
	60%	2	120	66	0.61 A	0.68	1.03	99	1.4	10	-22/-30
F40T8	60%	2	277	65	0.27 A	0.68	1.05	96	1.4	14	-22/-30

Safety and performance

UL Type 1 Outdoor UL Type HL ANSI - C82.11 Cons 2002, ANSI - C62.41 - 1991 Product is compliant with material restriction requirements of RoHS

FCC – Part 18 (Class A) for EMI and RFI Non-Consumer Limits cUL Listed UL Type CC NEMA Premium

High Temperature Rated: Suitable for high temperature applications 70C max case temp 5 yr warranty or 90C max case temp 3 yr warranty

See page E-1 for warranty information.

UltraMax® Bi-Level Dimming & Load Shed Dimming Instant Start High-Efficiency T8 Dimming Ballasts

73230 – GE432MAX90-V60

UltraMax® Load Shed Dimming
Instant Start High-Efficiency

4 – F32T8 120 to 277 "H" 1.18 BF UltraMax® 0-10V 100-60% dim

- Load Shed Variable Dimming 0-10V 100% to 60%
- Anti-Striation Control for better light quality, with no striations.
- UL 55C Ambient Rating - HighTemperature Protection Circuit
- Multi-Voltage Technology handles voltage from 120 to 277V
- UL Type CC Rating provides protection against arcing in electrical devices.
- Cold temperature -22F Minimum Starting Temperature

General characteristics

Ballast Type	Electronic - Dimming
Dimming Type	Continuous
Starting Method	Instant start
Lamp Wiring	Parallel
Line Voltage Regulation (+/-)	10 %
Ambient Temperature (MAX)	55° C (131° F)
Case Temperature (MAX)	70° C (158° F)
Ballast Factor	High (1.18)
Power Factor Correction	Active
Sound Rating	A (20-24 decibels)
Enclosure Type	Metal
Additional Info	No PCBs, Anti-striation control

Electrical characteristics

Supply Current Frequency (MIN)	60 Hz

Order information

10 Pack	Pallet Pack	DIY Pack	IP Pack
73230			

Dimensions

Wiring diagram - LFL-4H V60 – see example on Page 12-26	
Case dimensions- Ref Drawing -A – see Page 12-29	
Length (L)	9.5 in (241 mm)
Width (W)	1.7 in (43 mm)
Height (H)	1.18 in (30 mm)
Mounting dimensions	
Mount Length (M)	8.9 in (226 mm)
Mount Width (X or F)	1.18 in (30 mm)
Mount Slots (MS)	0.3 in (8 mm)
Weight	1.40 lbs
Exit Type	Side
Remote Mounting Distance to Lamp (F32T8)	18 ft
Remote Mounting Wire Gauge	18 AWG
Lead lengths	**Length (± 1 in.)**
Black	25.0 in (635 mm)
Blue	34.0 in (864 mm)
Gray	25.0 in (635 mm)
Red	34.0 in (864 mm)
Violet	25.0 in (635 mm)
White	25.0 in (635 mm)
Yellow	41.0 in (1041 mm)

Specifications by lamp and wattage

Lamp	Light Level	# of Lamps	Line Volts	System Watts	Nom. Line Current	System Ballast Factor	Ballast Efficacy Factor	Power Factor % (>=)	Crest Factor (<=)	THD% (<=)	Min. Starting Temp (°F/°C)
	100%	4	120	149	1.25 A	1.18	0.79	99	1.4	10	-22/-30
	100%	4	277	146	0.54 A	1.18	0.81	97	1.4	10	-22/-30
	60%	4	120	88	0.74 A	0.71	0.81	99	1.4	10	-22/-30
	60%	4	277	87	0.34 A	0.71	0.82	94	1.4	17	-22/-30
	100%	3	277	116	0.46 A	1.28	1.10	96	1.4	13	-22/-30
	100%	3	120	119	1.02 A	1.28	1.08	99	1.4	10	-22/-30
	60%	3	120	84	0.70 A	0.89	1.06	99	1.4	10	-22/-30
F32T8	60%	3	277	83	0.32 A	0.89	1.07	93	1.4	18	-22/-30
	100%	4	120	136	1.14 A	0.73	0.54	99	1.4	10	60/16
	100%	4	277	133	0.49 A	1.18	0.89	97	1.4	10	60/16
	60%	4	120	93	0.78 A	0.77	0.83	99	1.4	10	60/16
	60%	4	277	92	0.35 A	0.77	0.84	94	1.4	17	60/16
	100%	3	120	113	0.95 A	1.25	1.11	99	1.4	10	60/16
	100%	3	277	111	0.42 A	1.25	1.13	96	1.4	16	60/16
	60%	3	120	89	0.75 A	0.91	1.02	99	1.4	10	60/16
F32T8/WM	60%	3	277	89	0.34 A	0.91	1.02	93	1.4	18	60/16
	100%	4	120	127	1.07 A	1.18	0.93	99	1.4	10	60/16
	100%	4	277	125	0.48 A	1.18	0.94	96	1.4	13	60/16
	60%	4	120	95	0.79 A	0.87	0.92	99	1.4	10	60/16
	60%	4	277	94	0.36 A	0.87	0.93	93	1.4	17	60/16
	100%	3	120	104	0.86 A	1.24	1.19	99	1.4	10	-22/-30
	100%	3	277	102	0.38 A	1.24	1.22	95	1.4	16	-22/-30
	60%	3	120	89	0.74 A	1.18	1.33	99	1.4	10	-22/-30
F28T8	60%	3	277	89	0.34 A	1.18	1.33	93	1.4	18	-22/-30
	100%	4	120	116	0.96 A	1.18	1.02	99	1.4	10	60/16
	100%	4	277	114	0.43 A	1.18	1.04	96	1.4	16	60/16
	60%	4	120	94	0.79 A	0.87	0.93	99	1.4	10	60/16
	60%	4	277	93	0.36 A	0.87	0.94	93	1.4	17	60/16
	100%	3	120	95	0.80 A	1.24	1.31	99	1.4	10	60/16
	100%	3	277	94	0.36 A	1.24	1.32	94	1.4	16	60/16
	60%	3	120	90	0.75 A	1.22	1.36	99	1.4	10	60/16
F32T8/25W	60%	3	277	89	0.34 A	1.22	1.37	93	1.4	17	60/16
	100%	4	120	81	0.69 A	1.17	1.44	99	1.4	10	-22/-30
	100%	4	277	80	0.32 A	1.17	1.46	96	1.4	14	-22/-30
	60%	4	120	64	0.54 A	0.95	1.48	99	1.4	10	-22/-30
	60%	4	277	64	0.25 A	0.95	1.48	94	1.4	17	-22/-30
	100%	3	120	62	0.58 A	1.25	2.02	99	1.4	10	-22/-30
	100%	3	277	62	0.24 A	1.25	2.02	95	1.4	18	-22/-30
	60%	3	120	59	0.49 A	1.24	2.10	99	1.4	10	-22/-30
F17T8	60%	3	277	59	0.23 A	1.24	2.10	93	1.5	18	-22/-30
	100%	3	120	147	1.22 A	1.22	0.83	99	1.4	10	-22/-30
	100%	3	277	144	0.53 A	1.22	0.85	97	1.4	10	-22/-30
	60%	3	120	86	0.72 A	0.66	0.77	99	1.4	10	-22/-30
F40T8	60%	3	277	86	0.33 A	0.66	0.77	96	1.4	14	-22/-30

Safety and performance

UL Type 1 Outdoor UL Type HL ANSI - C82.11 Cons 2002, ANSI - C62.41 - 1991 Product is compliant with material restriction requirements of RoHS

FCC – Part 18 (Class A) for EMI and RFI Non-Consumer Limits cUL Listed UL Type CC NEMA Premium

High Temperature Rated: Suitable for high temperature applications 70C max case temp 5 yr warranty or 90C max case temp 3 yr warranty

See page E-1 for warranty information.

UltraMax® Bi-Level Dimming & Load Shed Dimming Instant Start High-Efficiency
T8 Dimming Ballasts

71731 – GE632MAX-H90-V60

UltraMax® Load Shed Dimming
Instant Start High-Efficiency

6 or 5 – F32T8 120 to 277 "H" 1.18 BF UltraMax® 0-10V 100-60% dim

- Load Shed Variable Dimming 0-10V 100% to 60%
- Anti-Striation Control for better light quality, with no striations.
- Extreme 95% Electrical Efficiency
- UL 55C Ambient Rating - HighTemperature Protection Circuit
- Multi-Voltage Technology handles voltage from 120 to 277V
- UL Type CC Rating provides protection against arcing in electrical devices.
- Cold temperature -20F Minimum Starting Temperature

General characteristics

Ballast Type	Electronic - Dimming
Dimming Type	Continuous
Starting Method	Instant start
Lamp Wiring	Parallel
Line Voltage Regulation (+/-)	10 %
Ambient Temperature (MAX)	55° C (131° F)
Case Temperature (MAX)	70° C (158° F)
Ballast Factor	High (1.18)
Power Factor Correction	Active
Sound Rating	A (20-24 decibels)
Enclosure Type	Metal
Additional Info	Anti-striation control, Universal voltage, Inherent thermal protection

Electrical characteristics

Supply Current Frequency (MIN)	60 Hz

Order information

10 Pack	Pallet Pack	DIY Pack	IP Pack
71731			

Dimensions

Wiring diagram - LFL -6H V60 – see example on Page 12-26	
Case dimensions- Ref Drawing -A – see Page 12-29	
Length (L)	11.75 in (299 mm)
Width (W)	1.7 in (43 mm)
Height (H)	1.18 in (30 mm)
Mounting dimensions	
Mount Length (M)	11.1 in (283 mm)
Mount Slots (MS)	0.3 in (8 mm)
Weight	3.10 lbs
Exit Type	Side
Remote Mounting Distance to Lamp (F32T8)	18 ft
Remote Mounting Wire Gauge	18 AWG
Lead lengths	**Length (± 1 in.)**
Black	25.0 in (635 mm)
Blue	34.0 in (864 mm)
Gray	25.0 in (635 mm)
Red	34.0 in (864 mm)
Violet	25.0 in (635 mm)
White	25.0 in (635 mm)
Yellow	41.0 in (1041 mm)

Specifications by lamp and wattage

Lamp	Light Level	# of Lamps	Line Volts	System Watts	Nom. Line Current	System Ballast Factor	Ballast Efficacy Factor	Power Factor % (>=)	Crest Factor (<=)	THD% (<=)	Min. Starting Temp (°F/°C)
	100%	6	120	221	1.94 A	1.18	0.53	99	1.4	10	-20/-29
	100%	6	277	215	0.82 A	1.18	0.55	97	1.4	10	-20/-29
	60%	6	120	133	1.13 A	0.71	0.53	99	1.4	1	-20/-29
	60%	6	277	132	0.53 A	0.71	0.54	94	1.4	17	-20/-29
	100%	5	120	197	1.73 A	1.25	0.63	99	1.4	10	-20/-29
	100%	5	277	192	0.73 A	1.25	0.65	97	1.4	13	-20/-29
	60%	5	120	123	1.04 A	0.77	0.63	99	1.4	10	-20/-29
F32T8	60%	5	277	122	0.49 A	0.77	0.63	93	1.4	18	-20/-29
	100%	6	120	205	1.80 A	1.18	0.58	99	1.4	10	60/16
	100%	6	277	200	0.76 A	1.18	0.59	97	1.4	10	60/16
	60%	6	120	128	1.09 A	0.71	0.55	99	1.4	10	60/16
	60%	6	277	127	0.51 A	0.71	0.56	94	1.4	17	60/16
	100%	5	120	182	1.60 A	1.23	0.68	99	1.4	10	60/16
	100%	5	277	178	0.68 A	1.23	0.69	96	1.4	16	60/16
	60%	5	120	121	1.03 A	0.82	0.68	99	1.4	10	60/16
F32T8/WM	60%	5	277	120	0.49 A	0.82	0.68	93	1.4	18	60/16
	100%	6	120	187	1.64 A	1.18	0.63	99	1.4	10	60/16
	100%	6	277	184	0.70 A	1.18	0.64	96	1.4	13	60/16
	60%	6	120	123	1.05 A	0.74	0.60	99	1.4	10	60/16
	60%	6	277	122	0.50 A	0.74	0.61	93	1.4	17	60/16
	100%	5	120	166	1.45 A	1.20	0.72	99	1.4	10	60/16
	100%	5	277	164	0.63 A	1.20	0.73	96	1.4	16	60/16
	60%	5	120	119	1.01 A	0.86	0.72	99	1.4	10	-20/-29
F28T8	60%	5	277	118	0.48 A	0.86	0.73	93	1.4	18	60/16
	100%	6	120	178	1.57 A	1.18	0.66	99	1.4	10	60/16
	100%	6	277	176	0.68 A	1.18	0.67	96	1.4	16	60/16
	60%	6	120	122	1.03 A	0.70	0.57	99	1.4	10	60/16
F32T8/25W	60%	6	277	121	0.49 A	0.70	0.58	93	1.4	17	60/16
	100%	5	120	159	1.40 A	1.16	0.73	99	1.4	10	-20/-29
	100%	5	277	157	0.61 A	1.16	0.74	95	1.4	18	-20/-29
	60%	5	120	118	1.01 A	0.87	0.74	99	1.4	10	-20/-29
F25T8	60%	5	277	117	0.48 A	0.87	0.74	93	1.4	20	-20/-29
	100%	6	120	122	1.08 A	1.17	0.96	99	1.4	10	-20/-29
	100%	6	277	121	0.50 A	1.17	0.97	90	1.4	24	-20/-29
	60%	6	120	104	0.88 A	1.03	0.99	99	1.4	10	-20/-29
	60%	6	277	103	0.43 A	1.03	1.00	89	1.4	24	-20/-29
	100%	5	120	107	0.95 A	1.24	1.16	99	1.4	10	-20/-29
	100%	5	277	106	0.44 A	1.24	1.17	88	1.4	26	-20/-29
	60%	5	120	98	0.83 A	1.16	1.18	99	1.4	10	-20/-29
F17T8	60%	5	277	98	0.42 A	1.16	1.18	88	1.4	26	-20/-29
	100%	5	120	231	2.03 A	1.18	0.51	99	1.4	10	0/-18
	100%	5	277	225	0.86 A	1.18	0.52	97	1.4	10	0/-18
	60%	5	120	131	1.12 A	0.64	0.49	99	1.4	10	0/-18
F40T8	60%	5	277	130	0.53 A	0.64	0.49	94	1.4	17	0/-18

Safety and performance

UL Type 1 Outdoor UL Type HL ANSI - C82.11 Cons 2002, ANSI - C62.41 - 1991 Product is compliant with material restriction requirements of RoHS

FCC – Part 18 (Class A) for EMI and RFI Non-Consumer Limits cUL Listed UL Type CC High Temperature Rated: Suitable for high temperature applications

70C max case temp 5 yr warranty or 90C max case temp 3 yr warranty NEMA Premium

See page E-1 for warranty information.

UltraStart® T8 100-3% 0-10V 120–277V Programmed Start Dimming
T8 Dimming Ballasts

75379 – GE132MVPS-N-V03

T8 Dimming/UltraStart® T8 100-3% 0-10V Programmed Start Dimming

1 – F32T8 120V-277V "N" .88 BF UltraStart® 0-10V Dimming 100-3%

- High Efficiency 100-3% 0-10V Programmed Start Dimming
- Multi-Voltage Technology handles voltage from 120 to 277V
- Parallel Lamp Operation - reliable deep dimming performance
- NEMA LL-9 Compliant - GE programmed start life and warranty ratings
- Anti-striation control for use with F32T8/WM or F28T8 Lamps
- UL Type CC rating provides protection against arcing in electrical devices
- UL 55C Ambient Rating – high temperature protection circuit
- Compatible with Class 1 or Class 2 LV 0-10VDC controllers

General characteristics

Ballast Type	Electronic - Dimming
Starting Method	Programmed start
Lamp Wiring	Parallel
Line Voltage Regulation (+/-)	10 %
Ambient Temperature (MAX)	
Case Temperature (MAX)	70° C (158° F)
Ballast Factor	Normal
Power Factor Correction	Active
Sound Rating	A (20-24 decibels)
Enclosure Type	Metal
Additional Info	Anti-striation control, Thermally protected, Universal voltage

Electrical characteristics

Supply Current Frequency	50Hz
Supply Current Frequency (MIN)	50Hz/60 Hz

Order information

10 Pack	Pallet Pack	DIY Pack	IP Pack
75379			

Dimensions

Wiring diagram – LFL PSD1 – see example on page 12-28	
Case dimensions – Ref Drawing -A – see page 12-29	
Length (L)	9.5 in (241 mm)
Width (W)	1.7 in (43 mm)
Height (H)	1.18 in (30 mm)
Mounting dimensions	
Mount Length (M)	8.9 in (226 mm)
Mount Width (X or F)	1.18 in (30 mm)
Mount Slots (MS)	0.3 in (8 mm)
Weight	1.65 lbs
Exit Type	Side
Remote Mounting Distance to Lamp (F32T8)	5 ft
Remote Mounting Wire Gauge	18 AWG
Lead lengths	**Length (± 1 in.)**
Yellow	47.0 in (1194 mm)
White	25.0 in (635 mm)
Red	33.0 in (838 mm)
Blue	33.0 in (838 mm)
Black	25.0 in (635 mm)
Violet	25.0 in (635 mm)
Gray	25.0 in (635 mm)

Specifications by lamp and wattage

Lamp	Light Level	# of Lamps	Line Volts	System Watts	Nom. Line Current	System Ballast Factor	Ballast Efficacy Factor	Power Factor % (>=)	Crest Factor (=)	THD % (=)	Min. Starting Temp (°F/°C)
	100%	1	120	30	0.25 A	0.88		98	1.7	10	
	100%	1	277	29	0.11 A	0.88		98	1.7	10	
	3%	1	120	7	0.06 A	0.01		90	1.7	32	
F32T8	3%	1	277	7	0.03 A	0.01		90	1.7	32	
	100%	1	120	28	0.24 A	0.88		98	1.7	10	
	100%	1	277	28	0.10 A	0.88		98	1.7	10	
	3%	1	120	7	0.05 A	0.01		90	1.7	32	
F32T8/WM	3%	1	277	7	0.03 A	0.01		90	1.7	32	
	100%	1	120	26	0.22 A	0.88		98	1.7	10	
	100%	1	277	26	0.09 A	0.88		98	1.7	10	
	3%	1	120	7	0.05 A	0.01		90	1.7	32	
F28T8	3%	1	277	7	0.03 A	0.01		90	1.7	32	

Safety and performance

UL Type 1 Outdoor UL Type HL FCC – CLASS A Non-Consumer UL Class P ANSI – C62.41 Product is compliant with material restriction requirements of RoHS

cUL Listed UL Listed NEMA Premium

See page E-1 for warranty information.

UltraStart® T8 100-3% 0-10V 120–277V Programmed Start Dimming
T8 Dimming Ballasts

75380 – GE232MVPS-N-V03

T8 Dimming/UltraStart® T8 100-3% 0-10V Programmed Start Dimming

2 – F32T8 120V-277V Normal Light .88 BF UltraStart® 0-10V Dimming 100-3%

- High Efficiency 100-3% 0-10V Programmed Start Dimming
- Multi-Voltage Technology handles voltage from 120 to 277V
- Parallel Lamp Operation - reliable deep dimming performance
- NEMA LL-9 Compliant - GE programmed start life and warranty ratings
- Anti-striation control for use with F32T8/WM or F28T8 Lamps
- UL Type CC rating provides protection against arcing in electrical devices
- UL 55C Ambient Rating – high temperature protection circuit
- Compatible with Class 1 or Class 2 LV 0-10VDC controllers

General characteristics

Ballast Type	Electronic – Dimming
Starting Method	Programmed start
Lamp Wiring	Parallel
Line Voltage Regulation (+/-)	10%
Ambient Temperature (MAX)	104°F (40°C)
Case Temperature (MAX)	70°C (158°F)
Ballast Factor	Normal
Power Factor Correction	Active
Sound Rating	A (20-24 decibels)
Additional Info	Anti-striation control, Thermally protected, Universal voltage

Electrical characteristics

Supply Current Frequency	50 Hz/Supply Current Frequency (MIN)/ 50 Hz/ 60 (MIN)
Supply Current Frequency (MIN)	50 Hz/60 Hz

Order information

10 Pack	Pallet Pack	DIY Pack	IP Pack
75380			

Dimensions

Wiring diagram – LFL PSD2 – see example on page 12-28	
Case dimensions – Ref Drawing -A – see page 12-29	
Length (L)	9.5 in (241 mm)
Width (W)	1.7 in (43 mm)
Height (H)	1.18 in (30 mm)
Mounting dimensions	
Mount Length (M)	8.9 in (226 mm)
Mount Width (X or F)	1.18 in (30 mm)
Mount Slots (MS)	0.3 in (8 mm)
Weight	1.65 lbs
Exit Type	Side
Remote Mounting Distance to Lamp (F32T8)	5 ft
Remote Mounting Wire Gauge	18 AWG
Lead lengths	**Length (± 1 in)**
Black	25 in (635 mm)
Blue and Red	33 in (838 mm)
White	25 in (635 mm)
Yellow	47 in (1194 mm)
Violet	25 in (635 mm)
Gray	25 in (635 mm)

Specifications by lamp and wattage

Lamp	Light Level	# of Lamps	Line Volts	System Watts	Nom. Line Current	System Ballast Factor	Ballast Efficacy Factor	Power Factor % (>=)	Crest Factor (=)	THD % (=)	Min. Starting Temp (°F/°C)
	100%	2	120	58	0.50 A	0.88		98	1.7	10	
	100%	2	277	56	0.21 A	0.88		98	1.7	10	
	3%	2	120	10	0.09 A	0.03		90	1.7	32	
	3%	2	277	11	0.04 A	0.03		90	1.7	32	
	100%	1	120	40	0.33 A	1.1		98	1.7	10	
	100%	1	277	40	0.15 A	1.1		98	1.7	10	
	3%	1	120	8	0.06 A	0.04		80	1.7	32	
F32T8	3%	1	277	8	0.03 A	0.03		80	1.7	32	
	100%	2	120	54	0.45 A	0.88		98	1.7	10	
	100%	2	277	53	0.19 A	0.88		98	1.7	10	
	3%	2	120	10	0.09 A	0.03		90	1.7	32	
	3%	2	277	11	0.04 A	0.03		90	1.7	32	
	100%	1	120	38	0.31 A	1.1		98	1.7	10	
	100%	1	277	37	0.14 A	1.1		90	1.7	10	
	3%	1	120	8	0.06 A	0.04		80	1.7	32	
F32T8/WM	3%	1	277	8	0.03 A	0.04		89	1.7	32	
	100%	2	120	50	0.42 A	0.88		98	1.7	10	
	100%	2	277	49	0.18 A	0.88		98	1.7	10	
	3%	2	120	10	0.09 A	0.03		90	1.7	32	
	3%	2	277	11	0.04 A	0.03		90	1.7	32	
	100%	1	120	36	0.30 A	1.1		98	1.7	10	
	100%	1	277	35	0.13 A	1.1		98	1.7	10	
	3%	1	120	8	0.06 A	0.04		80	1.7	32	
F28T8	3%	1	277	8	0.03 A	0.04		80	1.7	32	

Safety and performance

UL Type 1 Outdoor UL Type HL FCC – CLASS A Non-Consumer UL Class P ANSI – C62.41 Product is compliant with material restriction requirements of RoHS

cUL Listed UL Listed NEMA Premium

UltraStart® T8 100-3% 0-10V 120–277V Programmed Start Dimming
T8 Dimming Ballasts

75381 – GE332MVPS-N-V03

T8 Dimming/UltraStart® T8 100-3% 0-10V Programmed Start Dimming

3 – F32T8 120V-277V Normal Light .88 BF UltraStart® 0-10V Dimming 100-3%

- High Efficiency 100-3% 0-10V Programmed Start Dimming
- Multi-Voltage Technology handles voltage from 120 to 277V
- Parallel Lamp Operation - reliable deep dimming performance
- NEMA LL-9 Compliant - GE programmed start life and warranty ratings
- Anti-striation control for use with F32T8/WM or F28T8 Lamps
- UL Type CC rating provides protection against arcing in electrical devices
- UL 55C Ambient Rating – high temperature protection circuit
- Compatible with Class 1 or Class 2 LV 0-10VDC controllers

General characteristics

Ballast Type	Electronic – Dimming
Starting Method	Programmed start
Lamp Wiring	Parallel
Line Voltage Regulation (+/-)	10%
Ambient Temperature (MAX)	104°F (40°C)
Case Temperature (MAX)	70°C (158°F)
Ballast Factor	Normal
Power Factor Correction	Active
Sound Rating	A (20-24 decibels)
Additional Info	Anti-striation control, TCLP compliant, Thermally protected, Universal voltage

Electrical characteristics

Supply Current Frequency (MIN)	50 Hz/60 Hz

Order information

10 Pack	Pallet Pack	DIY Pack	IP Pack
75381			

Dimensions

Wiring diagram – LFL PSD3 – see example on page 12-28	
Case dimensions – Ref Drawing -A – see page 12-29	
Length (L)	9.5 in (241 mm)
Width (W)	1.7 in (43 mm)
Height (H)	1.18 in (30 mm)
Mounting dimensions	
Mount Length (M)	8.9 in (226 mm)
Mount Width (X or F)	1.18 in (30 mm)
Mount Slots (MS)	0.3 in (8 mm)
Weight	1.65 lbs
Exit Type	Side
Remote Mounting Distance to Lamp (F32T8)	5 ft
Remote Mounting Wire Gauge	18 AWG
Lead lengths	**Length (± 1 in)**
White and Black	25 in (635 mm)
Blue and Red	33 in (838 mm)
Red/White	33 in (838 mm)
Yellow	47 in (1194 mm)
Violet	25 in (635 mm)
Gray	25 in (635 mm)

Specifications by lamp and wattage

Lamp	Light Level	# of Lamps	Line Volts	System Watts	Nom. Line Current	System Ballast Factor	Ballast Efficacy Factor	Power Factor % (>=)	Crest Factor (=)	THD % (=)	Min. Starting Temp (°F/°C)
	100%	3	120	87	0.71 A	0.88		98	1.7	10	
	100%	3	277	85	0.30 A	0.88		98	1.7	10	
	3%	3	120	16	0.15 A	0.03		90	1.7	32	
	3%	3	277	16	0.07 A	0.03		90	1.7	32	
	100%	2	120	69	0.60 A	0.98		98	1.7	10	
	100%	2	277	68	0.25 A	0.98		98	1.7	10	
	3%	2	120	14	0.12 A	0.05		80	1.7	32	
F32T8	3%	2	277	14	0.06 A	0.05		80	1.7	32	
	100%	3	120	78	0.65 A	0.86		98	1.7	10	
	100%	3	277	76	0.28 A	0.86		98	1.7	10	
	3%	3	120	16	0.15 A	0.03		90	1.7	32	
	3%	3	277	16	0.07 A	0.03		90	1.7	32	
	100%	2	120	66	0.55 A	0.96		98	1.7	10	
	100%	2	277	65	0.24 A	0.96		90	1.7	10	
	3%	2	120	14	0.12 A	0.06		80	1.7	32	
F32T8/WM	3%	2	277	14	0.06 A	0.06		89	1.7	32	
	100%	3	120	74	0.60 A	0.85		98	1.7	10	
	100%	3	277	73	0.25 A	0.85		98	1.7	10	
	3%	3	120	16	0.14 A	0.03		90	1.7	32	
	3%	3	277	16	0.07 A	0.03		90	1.7	32	
	100%	2	120	58	0.50 A	0.94		98	1.7	10	
	100%	2	277	58	0.21 A	0.94		98	1.7	10	
	3%	2	120	14	0.12 A	0.07		80	1.7	32	
F28T8	3%	2	277	14	0.06 A	0.06		80	1.7	32	

Safety and performance

Product is compliant with material restriction requirements of RoHS UL Type 1 Outdoor ANSI – C62.41 UL Type HL FCC – CLASS A Non-Consumer UL Class P UL Listed NEMA Premium

See page E-1 for warranty information.

UltraStart® T8 100-3% 0-10V 120–277V Programmed Start Dimming
T8 Dimming Ballasts

75382 – GE432-MVPS-N-V03

T8 Dimming/UltraStart® T8 100-3% 0-10V Programmed Start Dimming

4 F32T8 120V-277V Normal Light .88 BF UltraStart® 0-10V Dimming 100-3%

- High Efficiency 100-3% 0-10V Programmed Start Dimming
- Multi-Voltage Technology handles voltage from 120 to 277V
- Parallel Lamp Operation - reliable deep dimming performance
- NEMA LL-9 Compliant - GE programmed start life and warranty ratings
- Anti-striation control for use with F32T8/WM or F28T8 Lamps
- UL Type CC rating provides protection against arcing in electrical devices
- UL 55C Ambient Rating – high temperature protection circuit
- Compatible with Class 1 or Class 2 LV 0-10VDC controllers

General characteristics

Ballast Type	Electronic – Dimming
Starting Method	Rapid start
Lamp Wiring	Parallel
Line Voltage Regulation (+/-)	10%
Ambient Temperature (MAX)	104°F (40°C)
Case Temperature (MAX)	70°C (158°F)
Ballast Factor	Normal
Power Factor Correction	Active
Sound Rating	A (20-24 decibels)
Additional Info	Anti-striation control, Thermally protected, Universal voltage

Electrical characteristics

Supply Current Frequency (MIN)	50 Hz/ 60 Hz

Order information

10 Pack	Pallet Pack	DIY Pack	IP Pack
75382			

Dimensions

Wiring diagram – LFL PSD4 – see example on page 12-28	
Case dimensions – Ref Drawing -A – see page 12-29	
Length (L)	9.5 in (241 mm)
Width (W)	1.7 in (43 mm)
Height (H)	1.18 in (30 mm)
Mounting dimensions	
Mount Length (M)	8.9 in (226 mm)
Mount Width (X or F)	1.18 in (30 mm)
Mount Slots (MS)	0.3 in (8 mm)
Weight	1.65 lbs
Exit Type	Side
Remote Mounting Distance to Lamp (F32T8)	5 ft
Remote Mounting Wire Gauge	18 AWG
Lead lengths	**Length (± 1 in)**
White and Black	25 in (635 mm)
Blue and Red	33 in (838 mm)
Blue/White	33 in (838 mm)
Red/White	33 in (838 mm)
Yellow	47 in (1194 mm)
Violet	25 in (635 mm)
Gray	25 in (635 mm)

Specifications by lamp and wattage

Lamp	Light Level	# of Lamps	Line Volts	System Watts	Nom. Line Current	System Ballast Factor	Ballast Efficacy Factor	Power Factor % (>=)	Crest Factor (=)	THD % (=)	Min. Starting Temp (°F/°C)
	100%	4	120	114	0.96 A	0.88		99	1.7	10	
	100%	4	277	111	0.41 A	0.88		98	1.7	10	
	3%	4	120	22	0.18 A	0.03		99	1.7	15	
	3%	4	277	22	0.09 A	0.03		90	1.7	30	
	100%	3	120	94	0.79 A	0.90		99	1.7	10	
	100%	3	277	92	0.34 A	0.90		99	1.7	10	
	3%	3	120	19	0.16 A	0.03		98	1.7	15	
F32T8	3%	3	277	18	0.08 A	0.03		90	1.7	30	
	100%	4	120	106	0.90 A	0.86		99	1.7	10	
	100%	4	277	104	0.38 A	0.86		98	1.7	10	
	3%	4	120	22	0.18 A	0.03		99	1.7	15	
	3%	4	277	22	0.09 A	0.03		90	1.7	30	
	100%	3	120	87	0.73 A	0.90		99	1.7	10	
	100%	3	277	85	0.32 A	0.90		99	1.7	10	
	3%	3	120	19	0.16 A	0.03		98	1.7	15	
F32T8/WM	3%	3	277	19	0.08 A	0.03		90	1.7	30	
	100%	4	120	98	0.82 A	0.85		99	1.7	10	
	100%	4	277	95	0.36 A	0.85		98	1.7	10	
	3%	4	120	22	0.18 A	0.03		99	1.7	15	
	3%	4	277	22	0.09 A	0.03		90	1.7	30	
	100%	3	120	79	0.70 A	0.90		99	1.7	10	
	100%	3	277	78	0.30 A	0.90		99	1.7	10	
	3%	3	120	19	0.16 A	0.03		98	1.7	15	
F28T8	3%	3	277	19	0.08 A	0.03		90	1.7	30	

Safety and performance

Product is compliant with material restriction requirements of RoHS UL Type 1 Outdoor ANSI – C62.41 UL Type HL FCC – CLASS A Non-Consumer UL Class P UL Listed NEMA Premium

See page E-1 for warranty information.

UltraStart® T8 100-3% 0-10V 120–277V Programmed Start Dimming
T8 Dimming Ballasts

75383 – GE232-MVPS-H-V03

T8 Dimming/UltraStart® T8 100-3% 0-10V Programmed Start Dimming

2 or 1 – F32T8 120V-277V High Light 1.18 BF UltraStart® 0-10V Dimming 100-3%

- High Efficiency 100-3% 0-10V Programmed Start Dimming
- Multi-Voltage Technology handles voltage from 120 to 277V
- Parallel Lamp Operation - reliable deep dimming performance
- NEMA LL-9 Compliant - GE programmed start life and warranty ratings
- Anti-striation control for use with F32T8/WM or F28T8 Lamps
- UL Type CC rating provides protection against arcing in electrical devices
- UL 55C Ambient Rating – high temperature protection circuit
- Compatible with Class 1 or Class 2 LV 0-10VDC controllers

General characteristics

Ballast Type	Electronic – Dimming
Starting Method	Programmed start
Lamp Wiring	Parallel
Line Voltage Regulation (+/-)	10%
Ambient Temperature (MAX)	105°F (41°C)
Case Temperature (MAX)	70°C (158°F)
Ballast Factor	High
Power Factor Correction	Active
Sound Rating	A (20-24 decibels)
Additional Info	Auto-restart, Thermally protected

Electrical characteristics

Supply Current Frequency	50 Hz/60 Hz

Order information

10 Pack	Pallet Pack	DIY Pack	IP Pack
75383			

Dimensions

Wiring diagram – LFL PSD2 – see example on page 12-28	
Case dimensions – Ref Drawing -A – see page 12-29	
Length (L)	9.5 in (241 mm)
Width (W)	1.7 in (43 mm)
Height (H)	1.18 in (30 mm)
Mounting dimensions	
Mount Length (M)	8.9 in (226 mm)
Mount Width (X or F)	1.18 in (30 mm)
Mount Slots (MS)	0.3 in (8 mm)
Weight	1.65 lbs
Exit Type	Side
Remote Mounting Distance to Lamp (F32T8)	5 ft
Remote Mounting Wire Gauge	18 AWG
Lead lengths	**Length (± 1 in)**
Blue and Red	33 in (838 mm)
Black	25 in (635 mm)
White	25 in (635 mm)
Yellow	47 in (1194 mm)
Blue	33 in (838 mm)
Violet	25 in (635 mm)
Gray	25 in (635 mm)

Specifications by lamp and wattage

Lamp	Light Level	# of Lamps	Line Volts	System Watts	Nom. Line Current	System Ballast Factor	Ballast Efficacy Factor	Power Factor % (>=)	Crest Factor (=)	THD % (=)	Min. Starting Temp (°F/°C)
	100%	2	120	76	0.64 A	1.18		98	1.7	10	
	100%	2	277	74	0.27 A	1.18		98	1.7	10	
	3%	2	120	14	0.12 A	0.03		90	1.7	32	
	3%	2	277	12	0.05 A	0.03		90	1.7	32	
	100%	1	120	46	0.40 A	1.34		98	1.7	10	
	100%	1	277	46	0.17 A	1.33		98	1.7	10	
	3%	1	120	8	0.07 A	0.07		80	1.7	32	
F32T8	3%	1	277	8	0.04 A	0.07		80	1.7	32	
	100%	2	120	72	0.60 A	1.16		98	1.7	10	
	100%	2	277	70	0.25 A	1.16		98	1.7	10	
	3%	2	120	14	0.12 A	0.03		90	1.7	32	
	3%	2	277	12	0.05 A	0.03		90	1.7	32	
	100%	1	120	44	0.36 A	1.33		98	1.7	10	
	100%	1	277	44	0.16 A	1.33		90	1.7	10	
	3%	1	120	8	0.07 A	0.08		80	1.7	32	
F32T8/WM	3%	1	277	8	0.04 A	0.08		89	1.7	32	
	100%	2	120	66	0.55 A	1.15		98	1.7	10	
	100%	2	277	65	0.24 A	1.15		98	1.7	10	
	3%	2	120	14	0.12 A	0.03		90	1.7	32	
	3%	2	277	12	0.05 A	0.03		90	1.7	32	
	100%	1	120	41	0.34 A	1.33		98	1.7	10	
	100%	1	277	41	0.15 A	1.33		98	1.7	10	
	3%	1	120	8	0.07 A	0.08		80	1.7	32	
F28T8	3%	1	277	8	0.04 A	0.08		80	1.7	32	

Safety and performance

UL Type 1 Outdoor UL Type HL Product is compliant with material restriction requirements of RoHS FCC – CLASS A Non-Consumer ANSI – C62.41 UL Class P

cUL Listed UL Listed High Temperature Rated: Suitable for high temperature applications 70°C max case temp 5 yr warranty or 90°C max case temp 3 yr warranty. NEMA Premium

See page E-1 for warranty information.

UltraStart® T8 100-3% 0-10V 120–277V Programmed Start Dimming
T8 Dimming Ballasts

75384 – GE332MVPS-H-V03

T8 Dimming/UltraStart® T8 100-3% 0-10V Programmed Start Dimming

3 – F32T8 120V-277V High Light 1.18 BF UltraStart® 0-10V Dimming 100-3%

- High Efficiency 100-3% 0-10V Programmed Start Dimming
- Multi-Voltage Technology handles voltage from 120 to 277V
- Parallel Lamp Operation - reliable deep dimming performance
- NEMA LL-9 Compliant - GE programmed start life and warranty ratings
- Anti-striation control for use with F32T8/WM or F28T8 Lamps
- UL Type CC rating provides protection against arcing in electrical devices
- UL 55C Ambient Rating – high temperature protection circuit
- Compatible with Class 1 or Class 2 LV 0-10VDC controllers

General characteristics

Ballast Type	Electronic – Dimming
Starting Method	Programmed start
Lamp Wiring	Parallel
Line Voltage Regulation (+/-)	10%
Ambient Temperature (MAX)	105°F (41°C)
Case Temperature (MAX)	70°C (158°F)
Ballast Factor	High
Power Factor Correction	Active
Sound Rating	A (20-24 decibels)
Additional Info	Auto-restart, Thermally protected

Electrical characteristics

Supply Current Frequency	50 Hz/60 Hz

Order information

10 Pack	Pallet Pack	DIY Pack	IP Pack
75384			

Dimensions

Wiring diagram – LFL PSD3 – see example on page 12-28	
Case dimensions – Ref Drawing -A – see page 12-29	
Length (L)	9.5 in (241 mm)
Width (W)	1.7 in (43 mm)
Height (H)	1.18 in (30 mm)
Mounting dimensions	
Mount Length (M)	8.9 in (226 mm)
Mount Width (X or F)	1.18 in (30 mm)
Mount Slots (MS)	0.3 in (8 mm)
Weight	1.65 lbs
Exit Type	Side
Remote Mounting Distance to Lamp (F32T8)	5 ft
Remote Mounting Wire Gauge	18 AWG
Lead lengths	**Length (± 1 in)**
White and Black	25 in (635 mm)
Blue and Red	33 in (838 mm)
Red/White	33 in (838 mm)
Yellow	47 in (1194 mm)
Violet	25 in (635 mm)
Gray	25 in (635 mm)

Specifications by lamp and wattage

Lamp	Light Level	# of Lamps	Line Volts	System Watts	Nom. Line Current	System Ballast Factor	Ballast Efficacy Factor	Power Factor % (>=)	Crest Factor (=)	THD % (=)	Min. Starting Temp (°F/°C)
	100%	3	120	116	0.97 A	1.18		98	1.7	10	
	100%	3	277	113	0.41 A	1.18		98	1.7	10	
	3%	3	120	17	0.14 A	0.03		90	1.7	32	
	3%	3	277	17	0.07 A	0.03		90	1.7	32	
	100%	2	120	87	0.73 A	1.26		98	1.7	10	
	100%	2	277	86	0.31 A	1.26		98	1.7	10	
	3%	2	120	14	0.12 A	0.05		80	1.7	32	
F32T8	3%	2	277	14	0.06 A	0.05		80	1.7	32	
	100%	3	120	103	0.86 A	1.16		98	1.7	10	
	100%	3	277	104	0.38 A	1.16		98	1.7	10	
	3%	3	120	17	0.14 A	0.03		90	1.7	32	
	3%	3	277	17	0.07 A	0.03		90	1.7	32	
	100%	2	120	81	0.67 A	1.26		98	1.7	10	
	100%	2	277	80	0.30 A	1.26		90	1.7	10	
	3%	2	120	14	0.12 A	0.05		80	1.7	32	
F32T8/WM	3%	2	277	14	0.06 A	0.05		89	1.7	32	
	100%	3	120	88	0.73 A	1.15		98	1.7	10	
	100%	3	277	96	0.35 A	1.15		98	1.7	10	
	3%	3	120	17	0.14 A	0.03		90	1.7	32	
	3%	3	277	17	0.07 A	0.03		90	1.7	32	
	100%	2	120	73	0.62 A	1.25		98	1.7	10	
	100%	2	277	71	0.26 A	1.25		98	1.7	10	
	3%	2	120	14	0.12 A	0.06		80	1.7	32	
F28T8	3%	2	277	14	0.06 A	0.06		80	1.7	32	

Safety and performance

UL Type 1 Outdoor UL Type HL Product is compliant with material restriction requirements of RoHS FCC – CLASS A Non-Consumer ANSI – C62.41 UL Class P cUL Listed UL Listed High Temperature Rated: Suitable for high temperature applications 70°C max case temp 5 yr warranty or 90°C max case temp 3 yr warranty. NEMA Premium

See page E-1 for warranty information.

UltraStart® T8 100-3% 0-10V 120–277V Programmed Start Dimming
T8 Dimming Ballasts

75385 – GE432-MVPS-H-V03

T8 Dimming/UltraStart® T8 100-3% 0-10V Programmed Start Dimming

4 – F32T8 120V-277V High Light 1.18 BF UltraStart® 0-10V Dimming 100-3%

- High Efficiency 100-3% 0-10V Programmed Start Dimming
- Multi-Voltage Technology handles voltage from 120 to 277V
- Parallel Lamp Operation - reliable deep dimming performance
- NEMA LL-9 Compliant - GE programmed start life and warranty ratings
- Anti-striation control for use with F32T8/WM or F28T8 Lamps
- UL Type CC rating provides protection against arcing in electrical devices
- UL 55C Ambient Rating – high temperature protection circuit
- Compatible with Class 1 or Class 2 LV 0-10VDC controllers

General characteristics

Ballast Type	Electronic – Dimming
Starting Method	Programmed start
Lamp Wiring	Parallel
Line Voltage Regulation (+/-)	10%
Ambient Temperature (MAX)	105°F (41°C)
Case Temperature (MAX)	70°C (158°F)
Ballast Factor	High
Power Factor Correction	Active
Sound Rating	A (20-24 decibels)
Additional Info	Auto-restart, Thermally protected

Electrical characteristics

Supply Current Frequency	50 Hz/60 Hz

Order information

10 Pack	Pallet Pack	DIY Pack	IP Pack
75385			

Specifications by lamp and wattage

Lamp	# of Lamps	Line Volts
F32T8	4	120
	4	277
	3	120
	3	277
F32T8/WM	4	120
	4	277
	3	120
	3	277
F28T8	4	120
	4	277
	3	120
	3	277
F25T8	4	120
	4	277
	3	120
	3	277
F17T8	4	120
	4	277
	3	120
	3	277

Dimensions

Wiring diagram – LFL PSD4 see example on page 12-28	
Case dimensions – Ref Drawing -A – see page 12-29	
Length (L)	11.75 in (299 mm)
Width (W)	1.7 in (43 mm)
Height (H)	1.18 in (30 mm)
Mounting dimensions	
Mount Length (M)	11.1 in (283 mm)
Mount Width (X or F)	1.6 in (40 mm)
Mount Slots (MS)	0.3 in (8 mm)
Weight	2.4 lbs
Exit Type	Side
Remote Mounting Distance to Lamp (F32T8)	5 ft
Remote Mounting Wire Gauge	18 AWG
Lead lengths	**Length (± 1 in)**
White and Black	25 in (635 mm)
Blue and Red	33 in (838 mm)
Blue/White	33 in (838 mm)
Red/White	33 in (838 mm)
Yellow	47 in (1194 mm)
Violet	25 in (635 mm)
Gray	25 in (635 mm)

Safety and performance

Product is compliant with material restriction requirements of RoHS ANSI – C62.41 UL Type 1 Outdoor UL Type HL FCC – CLASS A Non-Consumer UL Class P cUL Listed UL Listed High Temperature Rated: Suitable for high temperature applications 70°C max case temp 5 yr warranty or 90°C max case temp 3 yr warranty. NEMA Premium

See page E-1 for warranty information.

UltraStart® T8 100-3% 0-10V 120–277V Programmed Start Dimming
T8 Dimming Ballasts

62044 – GE432MVPS-N-V03W

T8 Dimming/UltraStart® T8 100-3% 0-10V Programmed Start Dimming

3 – F32T8 120V-277V Normal Light .88 BF UltraStart® 0-10V Dimming 100-3%

- High Efficiency 100-3% 0-10V Programmed Start Dimming
- Multi-Voltage Technology handles voltage from 120 to 277V
- Parallel Lamp Operation - reliable deep dimming performance
- NEMA LL-9 Compliant - GE programmed start life and warranty ratings
- Anti-striation control for use with F32T8/WM or F28T8 Lamps
- UL Type CC rating provides protection against arcing in electrical devices
- UL 55C Ambient Rating – high temperature protection circuit
- Compatible with Class 1 or Class 2 LV 0-10VDC controllers

General characteristics

Ballast Type	Electronic – Dimming
Starting Method	Rapid start
Lamp Wiring	Parallel
Line Voltage Regulation (+/-)	10%
Ambient Temperature (MAX)	104°F (40°C)
Case Temperature (MAX)	70°C (158°F)
Ballast Factor	Normal
Power Factor Correction	Active
Sound Rating	A (20-24 decibels)
Additional Info	Anti-striation control, No PCBs, Thermally protected, Universal voltage

Electrical characteristics

Supply Current Frequency (MIN)	50 Hz/60 Hz

Order information

10 Pack	Pallet Pack	DIY Pack	IP Pack
62044			

Dimensions

Wiring diagram – LFL PSD3 – see example on page 12-28	
Case dimensions – Ref Drawing -A – see page 12-29	
Length (L)	9.5 in (241 mm)
Width (W)	1.7 in (43 mm)
Height (H)	1.18 in (30 mm)
Mounting dimensions	
Mount Length (M)	8.9 in (226 mm)
Mount Width (X or F)	1.18 in (30 mm)
Mount Slots (MS)	0.3 in (8 mm)
Weight	1.65 lbs
Exit Type	Side
Remote Mounting Distance to Lamp (F32T8)	5 ft
Remote Mounting Wire Gauge	18 AWG
Lead lengths	**Length (± 1 in)**
White and Black	25 in (635 mm)
Blue and Red	19 in (483 mm)
Red/White	19 in (483 mm)
Yellow	100 in (2540 mm)
Violet	25 in (635 mm)
Gray	25 in (635 mm)

Specifications by lamp and wattage

Lamp	Light Level	# of Lamps	Line Volts	System Watts	Nom. Line Current	System Ballast Factor	Ballast Efficacy Factor	Power Factor % (>=)	Crest Factor (=)	THD % (=)	Min. Starting Temp (°F/°C)
	100%	4	120	87	0.71 A	0.88		98	1.7	10	
	100%	4	277	85	0.30 A	0.88		98	1.7	10	
	3%	3	120	16	0.15 A	0.03		90	1.7	32	
	3%	3	277	16	0.07 A	0.03		90	1.7	32	
	100%	2	120	69	0.60 A	0.98		98	1.7	10	
	100%	2	277	68	0.25 A	0.98		98	1.7	10	
	3%	2	120	14	0.12 A	0.05		80	1.7	32	
F32T8	3%	2	277	14	0.06 A	0.05		80	1.7	32	
	100%	3	120	78	0.65 A	0.86		98	1.7	10	
	100%	3	277	76	0.28 A	0.86		98	1.7	10	
	3%	3	120	16	0.15 A	0.03		90	1.7	32	
	3%	3	277	16	0.07 A	0.03		90	1.7	32	
	100%	2	120	66	0.55 A	0.96		98	1.7	10	
	100%	2	277	65	0.24 A	0.96		90	1.7	10	
	3%	2	120	14	0.12 A	0.06		80	1.7	32	
F32T8/WM	3%	2	277	14	0.06 A	0.06		89	1.7	32	
	100%	3	120	74	0.60 A	0.85		98	1.7	10	
	100%	3	277	73	0.25 A	0.85		98	1.7	10	
	3%	3	120	16	0.14 A	0.03		90	1.7	32	
	3%	3	277	16	0.07 A	0.03		90	1.7	32	
	100%	2	120	58	0.50 A	0.94		98	1.7	10	
	100%	2	277	58	0.21 A	0.94		98	1.7	10	
	3%	2	120	14	0.12 A	0.07		80	1.7	32	
F28T8	3%	2	277	14	0.06 A	0.06		80	1.7	32	

Safety and performance

Product is compliant with material restriction requirements of RoHS UL Type 1 Outdoor ANSI – C62.41 UL Type HL FCC – CLASS A Non-Consumer UL Class P UL Listed NEMA Premium

UltraStart® T5 120–277V Step Dimming Program Start Ballast
T5 Dimming Ballasts

90903 – GE228MVPS-N-S35

T5 Dimming/UltraStart® T5 120-277V
Step Dimming Program Start
2 or 1 F28T5HE lamps

- Line Voltage: Multi-Voltage 120 to 277 VAC, +/-10%, 50/60Hz
- Bi-Level Switching 100 to 35%
- Anti-Striation Control for better light quality, with no striations
- UL 55C Ambient Rating – High Temperature Protection Circuit

General characteristics

Ballast Type	Electronic – Dimming
Starting Method	Program start
Lamp Wiring	Series
Line Voltage Regulation (+/-)	10%
Ambient Temperature (MAX)	55°C (131°F)
Case Temperature (MAX)	70°C (158°F)
Ballast Factor	Normal
Power Factor Correction	Active
Sound Rating	A (20-24 decibels)
Additional Info	Anti-striation control, No PCBs, Thermally protected, Universal voltage

Electrical characteristics

Supply Current Frequency (MIN)	50 Hz/ 60 Hz

Order information

10 Pack	Pallet Pack	DIY Pack	IP Pack
90903			

Dimensions

Wiring diagram – LFL-2N/L S30 – see example on page 12-27	
Case dimensions – Ref Drawing -A – see page 12-29	
Length (L)	9.5 in (241 mm)
Width (W)	1.7 in (43 mm)
Height (H)	1.2 in (30.5 mm)
Mounting dimensions	
Mount Length (M)	9.0 in (229 mm)
Mount Width (X or F)	1.0 in (27 mm)
Mount Slots (MS)	0.3 in (8 mm)
Weight	1.73 lbs
Exit Type	Side
Remote Mounting Distance to Lamp (F24T5H0)	8 ft
Remote Mounting Wire Gauge	18 AWG
Lead lengths	**Length (± 1 in)**
White	20 in (508 mm)
Black	20 in (508 mm)
Red	26 in (660 mm)
Blue	26 in (660 mm)
Yellow	37 in (940 mm)

Specifications by lamp and wattage

Lamp	Light Level	# of Lamps	Line Volts	System Watts	Nom. Line Current	System Ballast Factor	Ballast Efficacy Factor	Power Factor % (>=)	Crest Factor (=)	THD % (=)	Min. Starting Temp (°F/°C)
		2	120	60	0.53 A	0.95	1.58	99	1.7	10	32/0
		2	277	58	0.22 A	0.95	1.64	97	1.7	10	32/0
		2	120	30	0.25 A	0.35	1.17	99	1.7	10	32/0
		2	277	30	0.11 A	0.35	1.17	93	1.7	20	32/0
		1	120	30	0.26 A	0.95	3.17	99	1.7	10	32/0
		1	277	29	0.12 A	0.95	3.28	92	1.7	20	32/0
		1	120	14	0.12 A	0.35	2.50	99	1.7	20	32/0
F28T5WM		1	277	15	0.06 A	0.35	2.33	82	1.7	25	32/0
		2	120	63	0.55 A	0.95	1.50	99	1.7	10	32/0
		2	277	62	0.24 A	0.95	1.53	97	1.7	10	32/0
		2	120	31	0.26 A	0.35	1.13	99	1.7	10	32/0
		2	277	32	0.12 A	0.35	1.09	94	1.7	20	32/0
		1	120	31	0.27 A	0.95	3.06	99	1.7	10	32/0
		1	277	31	0.12 A	0.95	3.06	92	1.7	20	32/0
		1	120	15	0.12 A	0.35	2.33	99	1.7	20	32/0
F28T5HL		1	277	15	0.07 A	0.35	2.33	83	1.7	25	32/0
		2	120	64	0.55 A	0.95	1.48	99	1.7	10	32/0
		2	277	62	0.24 A	0.95	1.53	97	1.7	10	32/0
		2	120	34	0.28 A	0.35	1.03	99	1.7	10	32/0
		2	277	33	0.13 A	0.35	1.06	94	1.7	20	32/0
		1	120	31	0.27 A	0.95	3.06	99	1.7	10	32/0
		1	277	31	0.12 A	0.95	3.06	92	1.7	20	32/0
		1	120	15	0.13 A	0.35	2.33	98	1.7	20	32/0
F28T5HE		1	277	16	0.07 A	0.35	2.19	83	1.7	25	32/0
		2	120	48	0.42 A	0.95	1.98	99	1.7	10	32/0
		2	277	47	0.18 A	0.95	2.02	96	1.7	10	32/0
		2	120	23	0.22 A	0.35	1.52	99	1.7	20	32/0
		2	277	24	0.10 A	0.35	1.46	91	1.7	10	32/0
		1	120	24	0.21 A	0.95	3.96	99	1.7	10	32/0
		1	277	24	0.10 A	0.95	3.96	89	1.7	20	32/0
		1	120	12	0.10 A	0.35	2.92	98	1.7	20	32/0
F21T5HE		1	277	12	0.06 A	0.35	2.92	77	1.7	30	32/0

Safety and performance

Product is compliant with material restriction requirements of RoHS UL Type 1 Outdoor UL Type HL ANSI – C62.41 FCC – CLASS A Non-Consumer
UL Class P UL Listed UL Class CC ANSI - C82.11 Cons 2002 No PCB's

See page E-1 for warranty information.

UltraStart® T5 120-277V Step Dimming Program Start Ballast
T5 Dimming Ballasts

90904 – GE224MVPS-N-S35

T5 Dimming/UltraStart® T5 120-277V
Step Dimming Program Start
2 or 1 F24T5HO lamps

- Line Voltage: Multi-Voltage 120 to 277 VAC, +/-10%, 50/60Hz
- Series Lamp Operation
- Bi-Level Switching 100 to 35%
- Programmed Rapid Start
- Active Power Factor Correction

General characteristics

Ballast Type	Electronic – Dimming
Starting Method	Program start
Lamp Wiring	Parallel
Line Voltage Regulation (+/-)	10%
Ambient Temperature (MAX)	131°F (55°C)
Case Temperature (MAX)	70°C (158°F)
Ballast Factor	Normal
Power Factor Correction	Active
Sound Rating	A (20-24 decibels)
Additional Info	Anti-striation control, No PCBs, Thermally protected, Universal voltage

Electrical characteristics

Supply Current Frequency (MIN)	50 Hz/ 60 Hz

Order information

10 Pack	Pallet Pack	DIY Pack	IP Pack
90904			

Dimensions

Wiring diagram – LFL-2N/L S30 – see example on page 12-27	
Case dimensions – Ref Drawing -A – see page 12-29	
Length (L)	9.5 in (241 mm)
Width (W)	1.7 in (43 mm)
Height (H)	1.2 in (30.5 mm)
Mounting dimensions	
Mount Length (M)	8.9 in (226 mm)
Mount Width (X or F)	1.18 in (30 mm)
Mount Slots (MS)	0.3 in (8 mm)
Weight	1.45 lbs
Exit Type	Side
Remote Mounting Distance to Lamp (F24T5H0)	8 ft
Remote Mounting Wire Gauge	18 AWG
Lead lengths	**Length (± 1 in)**
White	18 in (457 mm)
Black	18 in (457 mm)
Red	18 in (457 mm)
Blue	18 in (457 mm)
Yellow	26 in (660 mm)

Specifications by lamp and wattage

Lamp	Light Level	# of Lamps	System Watts		Nom. Line Current		System Ballast Factor	Ballast Efficacy Factor		Power Factor % (<=)		Crest Factor (<=)	THD% (<=)		Min Starting Temp (°F/°C)
			120V	277V	120V	277V		120V	277V	120V	277V		120V	277V	
F24T5/HO	100%	2	51	50	0.44 A	0.19 A	1.00	1.97	2.02	99	97	1.7	10	10	0/-18
	35%	2	23	23	0.19 A	0.09 A	0.35	1.54	1.52	99	90	1.7	10	20	0/-18
	100%	1	27	27	0.24 A	0.11 A	1.00	3.73	3.73	99	91	1.7	10	20	32/0
	35%	1	12	12	0.10 A	0.06 A	0.35	2.97	2.82	98	78	1.7	20	30	32/0
FT24W/2G11	100%	2	51	50	0.44 A	0.19 A	1.00	1.96	2.00	99	97	1.7	10	10	32/0
	35%	2	24	24	0.20 A	0.10 A	0.35	1.44	1.43	99	91	1.7	10	20	32/0
	100%	1	27	27	0.24 A	0.11 A	1.00	3.71	3.72	99	91	1.7	10	20	32/0
	35%	1	13	13	0.11 A	0.06 A	0.35	2.77	2.65	98	80	1.7	20	30	32/0
FT36W/2G11	100%	1	35	35	0.31 A	0.14 A	1.00	2.85	2.88	99	94	1.7	10	20	32/0
	35%	1	16	16	0.13 A	0.07 A	0.35	2.24	2.18	99	84	1.7	20	25	32/0
F39T5/HO	100%	1	40	39	0.35 A	0.15 A	1.00	2.49	2.54	99	95	1.7	10	20	32/0
	35%	1	17	17	0.14 A	0.07 A	0.35	2.08	2.05	99	85	1.7	10	25	32/0

Safety and performance

Product is compliant with material restriction requirements of RoHS UL Type 1 Outdoor UL Type HL ANSI – C62.41 FCC – CLASS A Non-Consumer
UL Class P UL Listed UL Class CC ANSI - C82.11 Cons 2002

For N-1 operation individually insulate each unused blue lamp lead for 600 Vrms.
Install and Ground Per National Electric Code

See page E-1 for warranty information.

LFL -6H S60

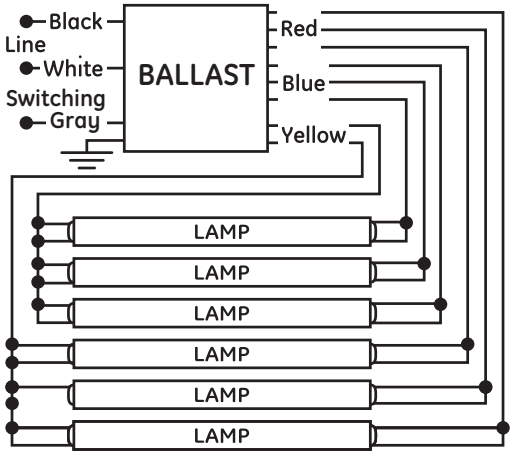

LFL -6H V60

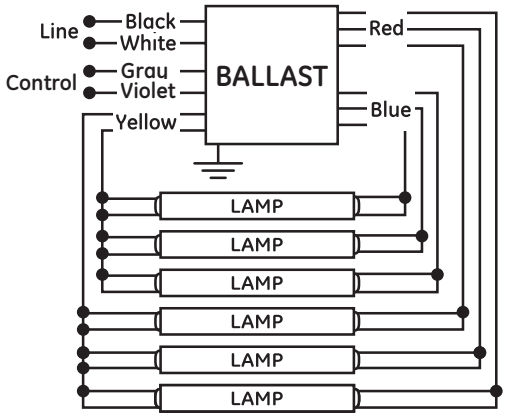

LFL -4H S60

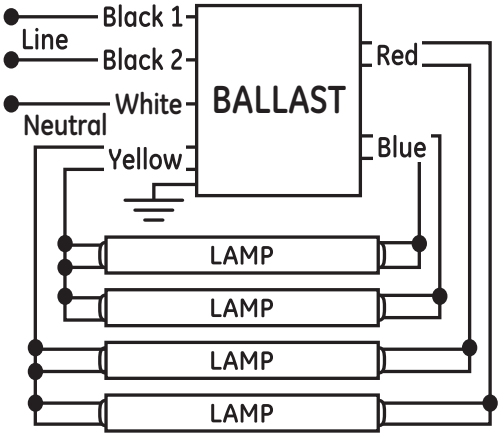

LFL -4H V60

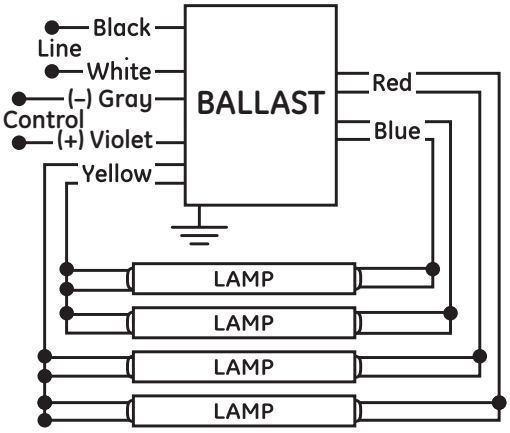

See page E-1 for warranty information.

Wiring Diagrams
T8 Dimming Ballasts

LFL -3H S60

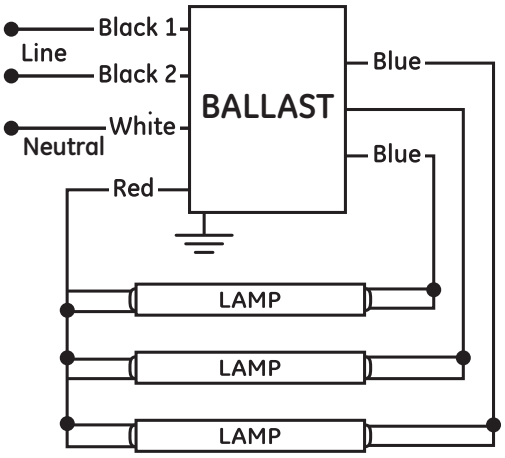

LFL -3H V60

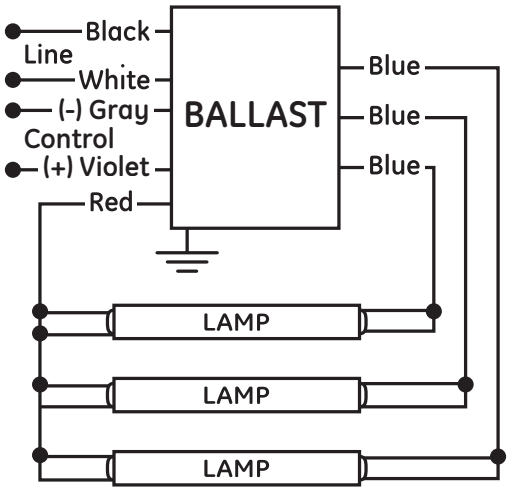

LFL -2H S60

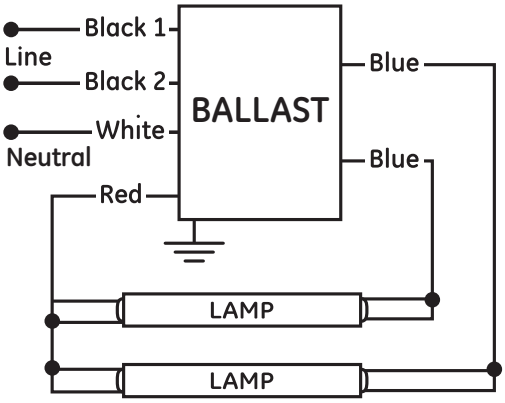

LFL -2H V60

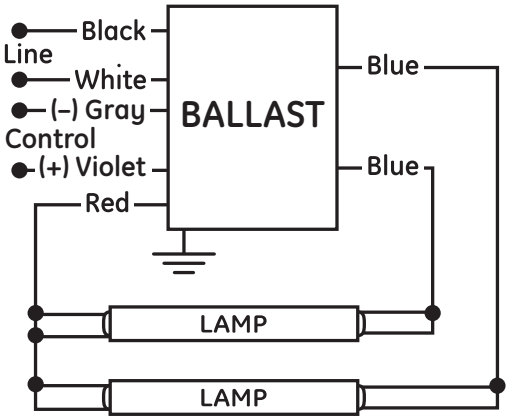

LFL - 1N S30

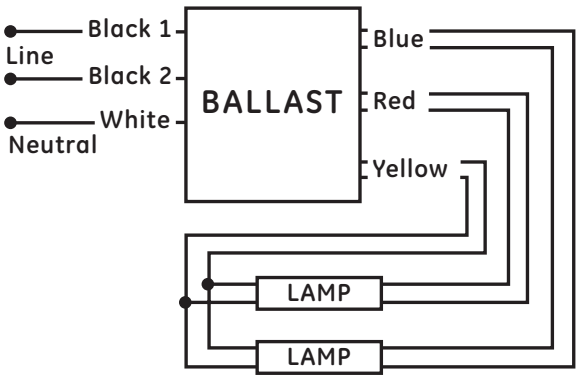

LFL - 2N/L S30

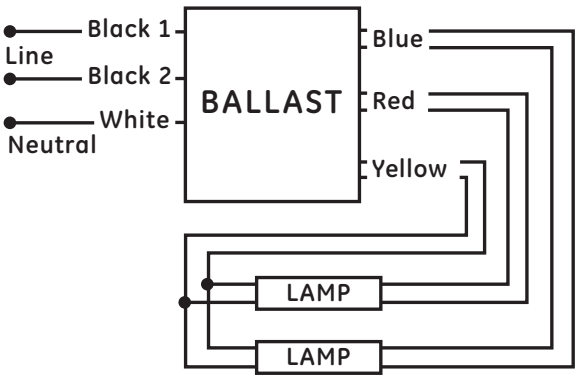

See page E-1 for warranty information.

Wiring Diagrams
T8 Dimming Ballasts

LFL PSD1

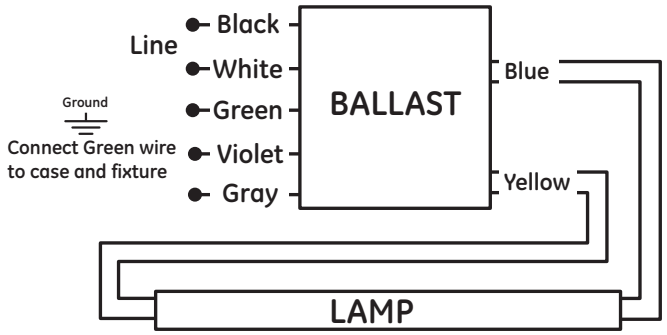

LFL PSD2

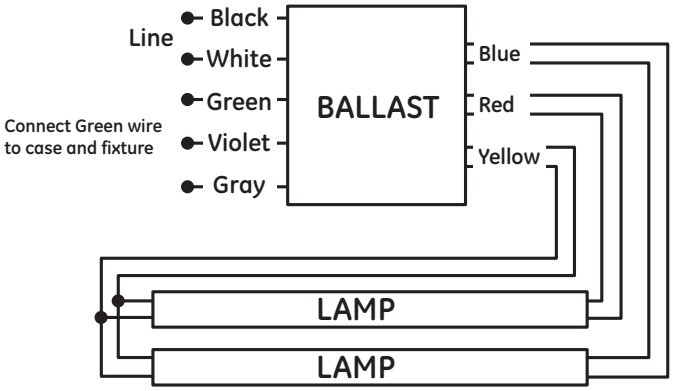

LFL PSD3

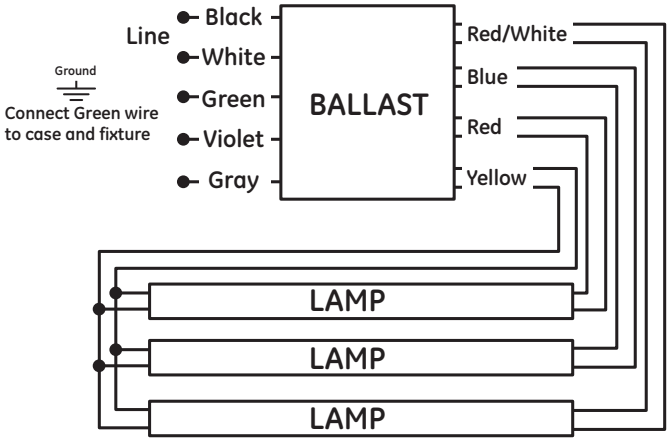

LFL PSD4

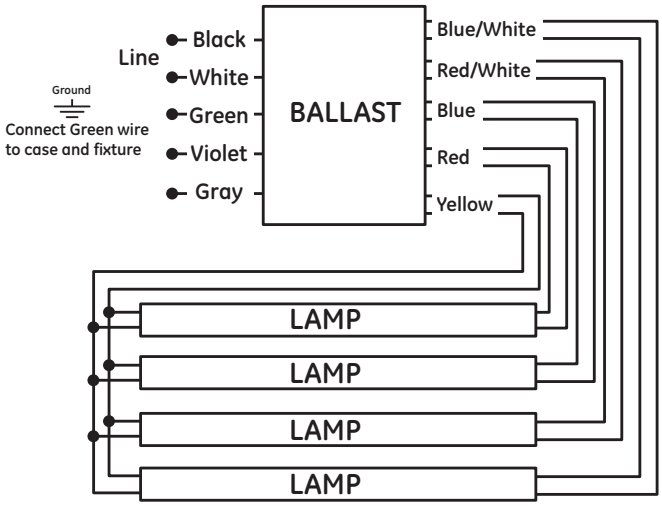

LFL PSD5

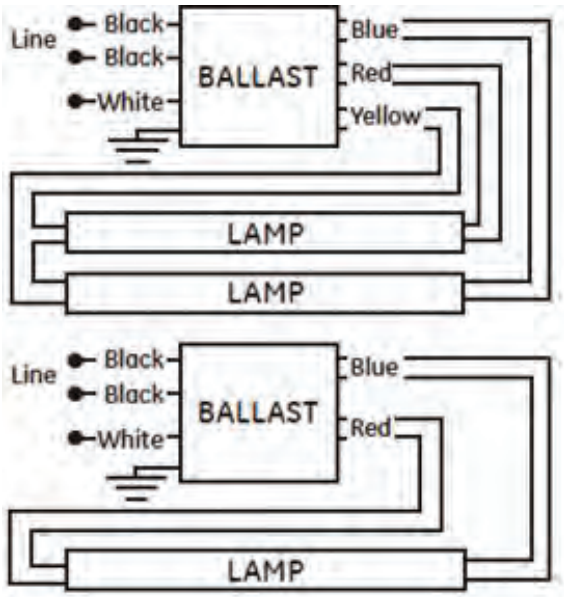

See page E-1 for warranty information.

Case Dimensions
T8 Dimming Ballasts

-A

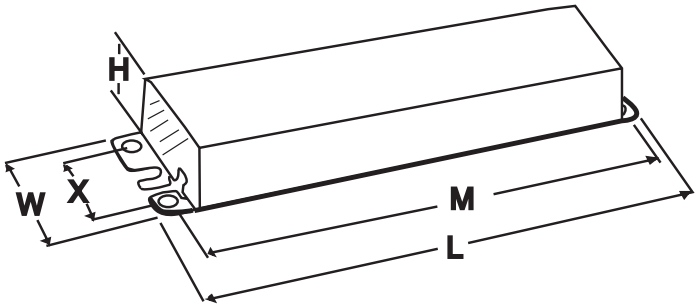

See page E-1 for warranty information.

Notes

See page E-1 for warranty information.

Table of Contents
T5 Electronic Programmed Start Ballasts

*T5 lamp lengths are noted to nearest foot and are not exact lengths as noted in feet. See GE Lamp Catalog for exact lamp length.

Understanding T5 Electronic Programmed Start Ballasts

UltraStart® T5 programmed start ballasts for T5 fluorescent lamps.

GE has developed a line of T5 ballasts that incorporate the benefits of programmed start ballasts with the energy savings, fast starting and parallel lamp operation of instant start ballasts. GE's UltraStart® T5 ballasts use low energy loss, high efficiency components along with continuous cathode cutout (CCC) technology—resulting in 8 fewer watts than standard 4-lamp 54 watt T5 ballasts. GE's UltraStart® T5 ballasts offer a 44% improvement over standard T5 ballasts and a new industry threshold for high efficiency ballasts.

The GE UltraStart® Watt-Miser® T5 Lamp and Ballast System Advantage

- 18 watts lower than standard 4-lamp, 54 watt T5 systems with the same light output
- Operates lamps in parallel (which means if one lamp fails, the other lamps remain on) – significantly reduces lamp maintenance costs
- Fast starting programmed start ballast < 700 milliseconds compared to standard T5 at > 1.1 to 1.5 seconds

GE UltraStart® T5 programmed start ballasts use a control circuit to apply very precise cathode heat to ensure lamp cathodes have reached optimum temperature during lamp starting. Precise starting reduces the amount of cathode degradation associated with each start and increases lamp life significantly. After starting the lamps, continuous cathode cutout technology (CCC) is applied—which eliminates wasted power to the lamps, resulting in high efficiencies. GE UltraStart® systems also have the advantage of operating lamps in parallel. Parallel (versus series) lamp operation ballasts typically reduce spot relamping costs by 50% or extend group relamping by 15% or more due to average lamp mortality early failures.

T5 Lamps

GE T5 lamps can be electrically characterized into two groups:

High Efficiency (HE) Lamps (F14T5, F21T5, F28T5, F35T5 – standard, high-lumen and Watt-Miser®)

These lamps are high efficiency (HE), delivering around 100 lumens per watt and, while operating at the same lamp arc current, can be operated on the same ballast if the ballast system power and starting voltage are appropriate for the lamp load.

High Output (HO) Lamps (F24T5, F39T5, F54T5, F49T5, F80T5 – standard and Watt-Miser®)

These lamps are driven for high light output and are slightly less efficient (LPW) than HE lamps. They have unique lamp arc currents and starting voltages by wattage that require a specific ballast for each HO lamp wattage.

See T8 ballast section (page 10-3) for nomenclature information.

T5 High Efficiency – Rapid Start 120V Residential Ballast

T5 Electronic Programmed Start For F13T5, F14T5, F21T5 and F28T5

78518 - GE21T5-120-RES

T5 High Efficiency - Rapid Start

Electronic ballast for (1) F21T5; or (1) F14T5; or (1) F13T5

- Line Voltage: 120 VAC, 60Hz
- Lamp End of Life Protection
- Rapid Start

General characteristics

Starting Temperature (MIN)	-18°C (0°F)
Ambient Temperature (MAX)	55°C (131°F)
Case Temperature (MAX)	75°C (167°F)
Sound Rating	A
Starting time	0.5s<t<2s

Dimensions

Wiring diagram – LFL 1a – see example on page 13-18	
Case dimensions – Ref Drawing -	
Length (L)	5.9 in (150 mm)
Width (W)	0.93 in (24 mm)
Height (H)	0.75 in (19 mm)
Mounting dimensions	
Mount Length (M)	5.6 in. (143 mm)
Weight	0.29 lbs
Lead lengths	**Length (± 1 in)**
Black/White	12 in (305 mm)
Blue	31 in (787 mm)
Red	19 in (483 mm)

Specifications by lamp and wattage

Lamp	# of Lamps	Line Volts	Input Watts	Nom. Line Amps	Power Factor % (>=)	Crest Factor (<=)	Min. Starting Temp (°F/°C)
F21T5	1	120	21	0.33	0.50	1.7	0/-18
F14T5	1	120	16	0.26	0.50	1.7	0/-18
F13T5	1	120	16	0.26	0.50	1.7	0/-18

Safety and performance UL/cUL Listed UL/cUL Listed Class P UL/cUL Listed Type 1 Outdoor Meets FCC Part 18 Consumer Limits Meets ANSI Standard C62.41-2002 OCV 300V Product is compliant with material restriction requirements of RoHS Meets November 14 DOE standards No PCB's

78811 - GE28T5-120-RES

T5 High Efficiency - Rapid Start

Electronic ballast for (1) F28T5; or (1) F21T5; or (1) F14T5

- Line Voltage: 120 VAC, 60Hz
- Lamp End of Life Protection
- Rapid Start
- Series Lamp Operation

General characteristics

Starting Temperature (MIN)	-18°C (0°F)
Ambient Temperature (MAX)	55°C (131°F)
Case Temperature (MAX)	75°C (167°F)
Sound Rating	A
Starting time	0.8s<t<1.3s

Dimensions

Wiring diagram – LFL 1b – see example on page 13-18	
Case dimensions – Ref Drawing -	
Length (L)	5.9 in (150 mm)
Width (W)	0.93 in (24 mm)
Height (H)	0.75 in (19 mm)
Mounting dimensions	
Mount Length (M)	5.6 in. (143 mm)
Weight	0.29 lbs
Lead lengths	**Length (± 1 in)**
Black/White	19 in (483 mm)
Blue	31 in (787 mm)
Red	19 in (483 mm)

Specifications by lamp and wattage

Lamp	# of Lamps	Line Volts	Input Watts	Nom. Line Amps	Power Factor % (>=)	Crest Factor (<=)	Min. Starting Temp (°F/°C)
F28T5	1	120	30.5	0.475	0.50	1.7	0/-18
F21T5	1	120	24.3	0.39	0.50	1.7	0/-18
F14T5	2	120	30.5	0.47	0.50	1.7	0/-18

Safety and performance UL/cUL Listed UL/cUL Listed Class P UL/cUL Listed Type 1 Outdoor Meets FCC Part 18 Consumer Limits Meets ANSI Standard C62.41-2002 OCV 300V Product is compliant with material restriction requirements of RoHS Meets November 14 DOE standards No PCB's Type HL

80021 - GE28T5/2-120-RES

T5 High Efficiency - Rapid Start

Electronic ballast for (2) F28T5; or (2) F21T5; or (2) F14T5

- Line Voltage: 120 VAC, 60Hz
- Lamp End of Life Protection
- Rapid Start
- Normal Power Factor Correction

General characteristics

Starting Temperature (MIN)	-18°C (0°F)
Ambient Temperature (MAX)	55°C (131°F)
Case Temperature (MAX)	75°C (167°F)
Sound Rating	A
Remote Mounting	18 ft max Lead Length, 18AWG

Dimensions

Wiring diagram – LFL 2a – see example on page 13-18	
Case dimensions – Ref Drawing -	
Length (L)	9 in (230 mm)
Width (W)	0.88 in (22.5 mm)
Height (H)	0.88 in (22.5 mm)
Mounting dimensions	
Mount Length (M)	8.75 in. (222 mm)
Weight	0.67 lbs
Lead lengths	**Length (± 1 in)**
Black/White	18 in (457 mm)
Blue	27 in (686 mm)
Red	27 in (686 mm)
Yellow	27 in (686 mm)

Specifications by lamp and wattage

Lamp	# of Lamps	Line Volts	Input Watts	Nom. Line Amps	Power Factor % (>=)	Crest Factor (<=)	Min. Starting Temp (°F/°C)
F28T5	2	120	60	0.96	0.50	1.7	0/-18
F21T5	2	120	44	0.78	0.50	1.7	0/-18
F14T5	2	120	31	0.62	0.50	1.7	0/-18

Safety and performance UL/cUL Listed UL/cUL Listed Class P UL/cUL Listed Type 1 Outdoor Meets FCC Part 18 Consumer Limits Meets ANSI Standard C62.41-2002 OCV 300V Product is compliant with material restriction requirements of RoHS Meets November 14 DOE standards No PCB's Meets Energy Star Version 1.0 Type HL

See page E-1 for warranty information.

*T5 lamp lengths are noted to nearest foot and are not exact lengths as noted in feet. See GE Lamp Catalog for exact lamp length.

T5 High Efficiency – Programmed Start

T5 Electronic Programmed Start For F14 (2 ft), F21 (3 ft), F28 (4 ft), F35 (5 ft) HE T5 Lamps*

68994 – GE228MVPS-MC-H (replaces 99653)

T5 High Efficiency - UltraStart® Programmed Start

2 – F21-F28T5HE, 120 to 277 UltraStart® PRS High Light 1.15 BF A Can

- High Efficiency T5 ballast with Continuous Cathode Cutout Technology
- Lower Maintenance Costs with Parallel Lamp Operation
- Fast Starting Time <700ms
- Multi-Voltage technology means a single ballast handles voltage from 108V to 305V
- Auto-Restart withstands temporary losses in power without the need to cycle power

General characteristics

Ballast Type	Electronic – Programmed / Rapid Start
Starting Method	Programmed start
Lamp Wiring	Parallel
Line Voltage Regulation (+/-)	10%
Ambient Temperature (MAX)	131°F (55°C)
Case Temperature (MAX)	90°C (194°F)
Ballast Factor	High (1.15)
Power Factor Correction	Active
Sound Rating	A (20-24 decibels)
Additional Info	Auto-restart, End-of-Life Protection (EOL), Thermally protected, Universal voltage, Anti-striation control

Electrical characteristics

Supply Current Frequency	50/60 Hz

Order information

10 Pack	Pallet Pack	DIY Pack	IP Pack
68994			

Dimensions

Wiring diagram – LFL 4a – see example on page 13-17	
Case dimensions – Ref Drawing -A Can – see page 13-19	
Length (L)	9.5 in (241 mm)
Width (W)	1.3 in (33 mm)
Height (H)	1.0 in (25.4 mm)
Mounting dimensions	
Mount Length (M)	8.9 in (226 mm)
Mount Slots (MS)	0.3 in (8 mm)
Weight	1.0 lbs
Exit Type	Side
Remote Mounting Distance to Lamp	8 ft
Remote Mounting Wire Gauge	18 AWG
Lead lengths	**Length (± 1 in)**
White and Black	20 in (508 mm)
Blue and Red	26 in (660 mm)
Yellow	37 in (940 mm)

Specifications by lamp and wattage

Lamp	# of Lamps	Line Volts	System Watts	Nom. Line Current	System Ballast Factor	Ballast Efficacy Factor	Power Factor % (>=)	Crest Factor (<=)	THD% (<=)	Min. Starting Temp (°F/°C)
	2	277	71	0.26 A	1.15	1.61	99	1.4	6	0/-18
F28T5HE	2	120	73	0.61 A	1.15	1.57	99	1.4	6	0/-18
	2	277	69	0.25 A	1.16	1.68	99	1.4	6	0/-18
F28T5HL	2	120	73	0.61 A	1.16	1.59	99	1.4	7	0/-18
	2	277	69	0.25 A	1.12	1.63	98	1.4	6	32/0
F28T5WM	2	120	71	0.59 A	1.12	1.58	99	1.4	7	32/0
	2	277	56	0.21 A	1.24	2.21	98	1.4	7	32/0
F21T5HE	2	120	57	0.48 A	1.24	2.18	99	1.4	7	32/0

Safety and performance UL Type CC UL Type 1 Outdoor UL Listed UL Type HL FCC – CLASS A Non-Consumer UL Class P Meets ANSI Standard C62.41-1991
Product is compliant with material restriction requirements of RoHS Meets ANSI Standard C82.11- cons 2002 No PCB's

68993 – GE228MVPS-MC (replaces 99655)

T5 High Efficiency - UltraStart® Programmed Start

2 or 1 – F14-F28T5HE, 120 – 277 UltraStart® PRS Normal Light - .95 BF A Can

- High Efficiency T5 ballast with Continuous Cathode Cutout Technology
- Lower Maintenance Costs with Parallel Lamp Operation
- Fast Starting Time <700ms
- Multi-Voltage technology means a single ballast handles voltage from 108V to 305V
- Auto-Restart withstands temporary losses in power without the need to cycle power

General characteristics

Ballast Type	Electronic – Programmed / Rapid Start
Starting Method	Programmed start
Lamp Wiring	Parallel
Line Voltage Regulation (+/-)	10%
Ambient Temperature (MAX)	131°F (55°C)
Case Temperature (MAX)	70°C (158°F)
Ballast Factor	Normal
Power Factor Correction	Active
Sound Rating	A (20-24 decibels)
Additional Info	Auto-restart, End-of-Life Protection (EOL), Thermally protected, Universal voltage, Anti-striation control

Electrical characteristics

Supply Current Frequency	50/60 Hz

Order information

10 Pack	Pallet Pack	DIY Pack	IP Pack
68993			

Dimensions

Wiring diagram – LFL 4a – see example on page 13-17	
Case dimensions – Ref Drawing -A Can – see page 13-19	
Length (L)	9.5 in (241 mm)
Width (W)	1.3 in (33 mm)
Height (H)	1.0 in (25.4 mm)
Mounting dimensions	
Mount Length (M)	8.9 in (226 mm)
Mount Slots (MS)	0.3 in (8 mm)
Weight	1.0 lbs
Exit Type	Side
Remote Mounting Distance to Lamp	8 ft
Remote Mounting Wire Gauge	18 AWG
Lead lengths	**Length (± 1 in)**
White and Black	20 in (508 mm)
Blue and Red	26 in (660 mm)
Yellow	37 in (940 mm)

Specifications by lamp and wattage

Lamp	# of Lamps	Line Volts	System Watts	Nom. Line Current	System Ballast Factor	Ballast Efficacy Factor	Power Factor% (>=)	Crest Factor (<=)	THD% (<=)	Min. Starting Temp (°F/°C)
	2	277	60	0.22 A	0.96	1.60	99	1.4	6	0/-18
	1	277	41	0.16 A	1.21	2.95	97	1.4	9	0/-18
	2	120	62	0.53 A	0.96	1.55	99	1.4	7	0/-18
F28T5HE	1	120	41	0.35 A	1.21	2.95	99	1.4	8	0/-18
	2	277	60	0.23 A	0.96	1.60	98	1.4	6	32/0
	1	277	41	0.15 A	1.21	2.95	97	1.4	10	32/0
	2	120	62	0.52 A	0.96	1.55	99	1.4	7	32/0
F28T5HL	1	120	41	0.35 A	1.21	2.95	99	1.4	8	32/0
	2	277	58	0.22 A	0.98	1.69	98	1.4	6	32/0
F28T5WM	2	120	59	0.50 A	0.98	1.66	99	1.4	7	32/0
	2	277	50	0.18 A	1.04	2.08	98	1.4	7	32/0
F21T5HE	2	120	51	0.43 A	1.04	2.04	99	1.4	8	32/0
	2	277	37	0.14 A	1.10	2.97	97	1.4	10	32/0
F14T5HE	2	120	37	0.32 A	1.10	2.97	99	1.4	9	32/0
	2	277	36	0.13 A	1.10	3.06	97	1.4	11	32/0
F14T5WM	2	120	36	0.30 A	1.10	3.06	99	1.4	9	32/0

Safety and performance UL Type CC UL Type 1 Outdoor UL Listed UL Type HL FCC – CLASS A Non-Consumer UL Class P cUL Listed Meets ANSI Standard C62.41-1991
Product is compliant with material restriction requirements of RoHS Meets ANSI Standard C82.11- cons 2002 No PCB's

See page E-1 for warranty information.

T5 High Output – Programmed Start

T5 Electronic Programmed Start For T5 HO Lamps*

68976 – GE224MVPS-N

T5 High Output - Programmed Start

2 – F24T5HO PRS UNV 50/60 Hz C Can

- Electronic ballasts for all general fluorescent applications
- Extends lamp life in frequently switched applications
- Reduced lamp replacement cost; ideal for use with occupancy sensors

General characteristics

Ballast Type	Electronic – Programmed / Rapid Start
Starting Method	Programmed start
Lamp Wiring	Series
Line Voltage Regulation (+/-)	10%
Ambient Temperature (MAX)	131°F (55°C)
Case Temperature (MAX)	70°C (158°F)
Ballast Factor	Normal
Power Factor Correction	Active
Sound Rating	A (20-24 decibels)
Additional Info	Auto-restart, End-of-Life Protection (EOL), Thermally protected, Universal voltage

Electrical characteristics

Supply Current Frequency	50 Hz/60 Hz

Dimensions

Wiring diagram – LFL 4a – see example on page 13-17	
Case dimensions – Ref Drawing -C Can – see page 13-19	
Length (L)	9.5 in (241.3 mm)
Width (W)	1.30 in (33 mm)
Height (H)	1.0 in (25.4 mm)
Mounting dimensions	
Mount Length (M)	8.9 in (226 mm)
Mount Slots (MS)	0.25 in (6 mm)
Weight	1.0 lb
Exit Type	Poke-in
Remote Mounting Distance to Lamp	18 ft
Remote Mounting Wire Gauge	18 AWG

Order information

10 Pack	Pallet Pack	DIY Pack	IP Pack
68976			

Specifications by lamp and wattage

Lamp	# of Lamps	Line Volts	System Watts	Nom. Line Current	System Ballast Factor	Ballast Efficacy Factor	Power Factor % (>=)	Crest Factor (<=)	THD (<=)	Min. Starting Temp (°F/°C)
	2	277	50	0.18 A	0.98	1.96	98	1.4	5	0/-18
	1	277	32	0.11 A	1.14	3.56	96	1.4	6	0/-18
	2	120	51	0.42 A	0.98	1.92	99	1.4	6	0/-18
F24T5HO	1	120	32	0.27 A	1.14	3.56	99	1.4	7	0/-18
	2	277	47	0.17 A	1.09	2.32	98	1.4	5	32/0
	1	277	29	0.11 A	1.20	4.14	96	1.4	6	32/0
	2	120	48	0.40 A	1.09	2.27	99	1.4	6	32/0
FT24W/2G11	1	120	29	0.24 A	1.20	4.14	99	1.4	7	32/0
	1	277	36	0.13 A	1.13	3.14	97	1.4	5	32/0
FT36W/2G11	1	120	37	0.31 A	1.13	3.05	99	1.4	6	32/0
	1	277	46	0.17 A	1.08	2.35	98	1.4	5	32/0
F39T5/HO	1	120	47	0.39 A	1.08	2.30	99	1.4	6	32/0

Safety and performance UL Type 1 Outdoor UL Type HL FCC – CLASS A Non-Consumer UL Class P UL Listed No PCB's UL Type CC ANSI Standard C82.11 – Cons 2002

ANSI Standard C62.41 – 1991 Product is compliant with material restriction requirements of RoHs

47540 – B239PUNV-DOG1C

T5 High Output - Programmed Start

2 – F39T5HO PRS UNV 50/60 Hz D Can

- Electronic ballasts for all general fluorescent applications
- Extends lamp life in frequently switched applications
- Reduced lamp replacement cost; ideal for use with occupancy sensors

General characteristics

Ballast Type	Electronic – Programmed / Rapid Start
Starting Method	Programmed start
Lamp Wiring	Series
Line Voltage Regulation (+/-)	10%
Ambient Temperature (MAX)	105°F (41°C)
Case Temperature (MAX)	70°C (158°F)
Ballast Factor	Normal
Power Factor Correction	Active
Sound Rating	A (20-24 decibels)
Additional Info	Auto-restart, End-of-Life Protection (EOL), Thermally protected, Universal voltage

Electrical characteristics

Supply Current Frequency	50 Hz/60 Hz

Dimensions

Wiring diagrams – LFL 4b – see example on page 13-17	
Case dimensions – Ref Drawing -D Can – see page 13-19	
Length (L)	16.9 in (429 mm)
Width (W)	1.18 in (30 mm)
Height (H)	1.0 in (25 mm)
Mounting dimensions	
Mount Length (M)	16.2 in (411 mm)
Mount Slots (MS)	0.25 in (6 mm)
Weight	
Exit Type	Poke-in
Remote Mounting Distance to Lamp	18 ft
Remote Mounting Wire Gauge	18 AWG

Order information

10 Pack	Pallet Pack	DIY Pack	IP Pack
47540			

Specifications by lamp and wattage

Lamp	# of Lamps	Line Volts	System Watts	Nom. Line Current	System Ballast Factor	Ballast Efficacy Factor	Power Factor % (>=)	Crest Factor (<=)	THD (<=)	Min. Starting Temp (°F/°C)
	2	120	89	0.74 A	0.98	1.10		1.7	10	0/-18
	2	277	88	0.32 A	0.98	1.11		1.7	10	0/-18
	1	120	47	0.39 A	0.98	2.08		1.7	10	0/-18
F39T5/HO	1	277	47	0.17 A	0.95	2.02		1.7	10	0/-18
	2	120	71	0.59 A	0.98	1.38	97	1.7	10	0/-18
	2	277	70	0.25 A	0.95	1.35	97	1.7	10	0/-18
	1	120	38	0.31 A	0.98	2.57		1.7	10	0/-18
FT39W/4P	1	277	38	0.14 A	0.90	2.36		1.7	10	0/-18
	2	120	59	0.51 A	0.98	1.66		1.7	10	0/-18
	2	277	59	0.22 A	0.95	1.61		1.7	10	0/-18
	1	120	32	0.26 A	0.98	3.06		1.7	10	0/-18
F24T5/HO	1	277	32	0.12 A	0.90	2.81		1.7	10	0/-18

Safety and performance UL Type 1 Outdoor UL Type HL FCC – CLASS A Non-Consumer UL Class P CSA UL Listed

*T5 lamp lengths are noted to nearest foot and are not exact lengths as noted in feet. See GE Lamp Catalog for exact lamp length.

T5 High Output – Programmed Start

T5 Electronic Programmed Start For T5 HO Lamps*

67562 – GE254MVPS90-A

T5 High Output - UltraStart® Programmed Start

2 or 1 – F54T5HO 120 to 277V UltraStart® PRS High Temp A Can

- High Efficiency T5 ballast with Continuous Cathode Cutout Technology
- Lower Maintenance Costs with Parallel Lamp Operation
- Fast Starting Time <700ms
- Multi-Voltage technology means a single ballast handles voltage from 108V to 305V
- Auto-Restart withstands temporary losses in power without the need to cycle power

General characteristics

Ballast Type	Electronic – Programmed / Rapid Start
Starting Method	Programmed start
Lamp Wiring	Parallel
Line Voltage Regulation (+/-)	10%
Ambient Temperature (MAX)	131°F (55°C)
Case Temperature (MAX)	90°C (194°F)
Ballast Factor	Normal
Power Factor Correction	Active
Sound Rating	A (20-24 decibels)
Additional Info	Auto-restart, End-of-Life Protection (EOL), Thermally protected, Universal voltage, Anti-striation control

Electrical characteristics

Supply Current Frequency	50/60 Hz

Order information

10 Pack	Pallet Pack	DIY Pack	IP Pack
67562			

Dimensions

Wiring diagram – LFL 4a (One lamp operation) & T51 – see example on page 13-18	
Case dimensions – Ref Drawing -F – see page 13-19	
Length (L)	9.5 in (241.3 mm)
Width (W)	1.7 in (43.2 mm)
Height (H)	1.2 in (30.5 mm)
Mounting dimensions	
Mount Length (M)	8.9 in (226 mm)
Mount Slots (MS)	0.25 in (6 mm)
Weight	1.50 lbs
Exit Type	Side
Remote Mounting Distance to Lamp	12 ft
Remote Mounting Wire Gauge	18 AWG
Lead lengths	**Length (± 1 in)**
White and Black	25 in (635 mm)
Blue and Red	34 in (864 mm)
Yellow	45 in (1143 mm)

Specifications by lamp and wattage

Lamp	# of Lamps	Line Volts	System Watts	Nom. Line Current	System Ballast Factor	Ballast Efficacy Factor	Power Factor% (>=)	Crest Factor (<=)	THD% (<=)	Min. Starting Temp (°F/°C)
	2	120	117	0.98	1.00	0.85	1.00	1.4	4.4	-20/-29
	2	277	114	0.41	1.10	0.96	0.99	1.4	5.4	-20/-29
	1	120	63	0.53	1.00	1.59	1.00	1.4	6.4	-20/-29
F54T5HO	1	277	62	0.23	1.10	1.77	0.97	1.4	6.6	-20/-29
	2	120	109	0.90	1.00	0.92	1.00	1.4	4.6	0/-18
	2	277	107	0.40	1.12	1.05	0.99	1.4	5.2	0/-18
	1	120	61	0.51	1.00	1.64	1.00	1.4	6.7	0/-18
F54T5WM	1	277	60	0.22	1.12	1.87	0.97	1.4	7.7	0/-18
	2	120	105	0.88	1.00	0.95	1.00	1.4	4.8	-20/-29
	2	277	104	0.40	1.10	1.06	0.99	1.4	5.3	-20/-29
	1	120	58	0.48	1.00	1.72	1.00	1.4	6.9	-20/-29
F54T5/47W	1	277	57	0.22	1.10	1.93	0.96	1.4	8.0	-20/-29
	2	120	110	0.90	0.95	0.86	1.00	1.4	4.7	-20/-29
	2	277	107	0.39	0.95	0.89	0.99	1.4	5.4	-20/-29
	1	120	59	0.49	1.08	1.83	1.00	1.4	6.6	-20/-29
F58T8	1	277	59	0.22	1.08	1.83	0.96	1.4	7.3	-20/-29
	2	120	116	0.97	0.86	0.74	1.00	1.4	4.9	0/-18
	2	277	112	0.41	0.86	0.77	0.99	1.4	5.4	0/-18
	1	120	61	0.51	1.03	1.69	1.00	1.4	6.8	0/-18
FT55W/4P	1	277	60	0.23	1.03	1.72	0.97	1.4	8.0	0/-18
	2	120	118	1.00	1.05	0.89	1.00	1.4	4.6	0/-18
	2	277	116	0.43	1.06	0.91	0.99	1.4	5.2	0/-18
	1	120	64	0.53	1.18	1.84	1.00	1.4	6.6	0/-18
FT50W/4P	1	277	63	0.24	1.18	1.87	0.97	1.4	7.4	0/-18

Safety and performance

UL Type 1 Outdoor UL Type CC UL Listed Meets ANSI Standard C62.41-1991 UL Class P Meets ANSI Standard C82.11- cons 2002

FCC – CLASS A Non-Consumer Product is compliant with material restriction requirements of RoHS

High Temperature Rated: Suitable for high temperature applications 80°C max case temp 5 yr warranty.

See page E-1 for warranty information.

T5 High Output – Programmed Start

T5 Electronic Programmed Start For T5 HO Lamps*

33957 - GE254MVPS-D-1

T5 High Output - UltraStart® Programmed Start

2 or 1 – F54T5HO 120 to 277V UltraStart® PRS High Temp D Can

- High Efficiency T5 ballast with Continuous Cathode Cutout Technology
- Fast Starting Time <700ms
- Multi-Voltage technology means a single ballast handles voltage from 108V to 305V
- Auto-Restart withstands temporary losses in power without the need to cycle power
- Anti-Striation Control for better light quality, with no striations.
- Cold temperature -20°F Minimum Starting Temperature

General characteristics

Ballast Type	Electronic –Program / Rapid Start
Starting Method	Programmed start
Lamp Wiring	Series
Line Voltage Regulation (+/-)	10%
Ambient Temperature (MAX)	40°C (104°F)
Case Temperature (MAX)	70°C (158°F)
Ballast Factor	Normal
Power Factor Correction	Active
Sound Rating	A (20-24 decibels)
Enclosure Type	Metal
Additional Info	Auto-restart, End of Life Protection (EOL), Thermally protected, Universal voltage

Electrical characteristics

Supply Current Frequency	50/60 Hz

Order information

10 Pack	Pallet Pack	DIY Pack	IP Pack
33957			

Dimensions

Wiring diagram – LFL 4a – see example on page 13-17	
Case dimensions – Ref Drawing -A Can – see page 13-19	
Length (L)	9.5 in (241 mm)
Width (W)	1.3 in (33 mm)
Height (H)	1.0 in (25.5 mm)
Mounting dimensions	
Mount Length (M)	8.9 in (226 mm)
Mount Width (X or F)	0.9 in (22 mm)
Mount Slots (MS)	0.3 in (8 mm)
Weight	1.1 lbs
Exit Type	Side
Remote Mounting Distance to Lamp	18 ft
Remote Mounting Wire Gauge	18 AWG

Specifications by lamp and wattage

Lamp	# of Lamps	Line Volts	System Watts	Nom. Line Current	System Ballast Factor	Ballast Efficacy Factor	Power Factor% (>=)	Crest Factor (<=)	THD% (<=)	Min. Starting Temp (°F/°C)
	2	120	106	0.93 A	1.00	0.94	99	1.7	5	-20/-29
	2	277	105	0.40 A	1.00	0.95	98	1.7	8	-20/-29
	1	120	67	0.60 A	0.13	0.19	99	1.5	6	-20/-29
F54T5/47W	1	277	67	0.26 A	1.13	1.69	98	1.5	8	-20/-29
	2	120	106	0.88 A	0.99	0.93	98	1.7	10	-20/-29
	2	277	105	0.38 A	0.98	0.95	97	1.7	10	-20/-29
	1	120	53	0.44 A	0.90	1.70	99	1.7	10	-20/-29
F54T5/49W	1	277	58	0.21 A	1.04	1.70	90	1.7	10	-20/-29
	2	120	120	1.00 A	1.00	0.84	98	1.7	10	-20/-29
	2	277	117	0.43 A	1.00	0.85	97	1.7	10	-20/-29
	1	120	62	0.52 A	1.03	1.46	98	1.7	10	-20/-29
F54T5/HO	1	277	62	0.23 A	1.03	1.49	90	1.7	10	-20/-29
	2	120	112	0.94 A	1.00	0.89	99	1.7	5	0/-18
	2	277	111	0.41 A	1.00	0.90	98	1.7	8	0/-18
	1	120	71	0.59 A	1.13	1.59	99	1.5	6	0/-18
F54T5/WM	1	277	71	0.26 A	1.13	1.59	98	1.5	8	0/-18
	2	120	108	0.91 A	0.95	0.88	99	1.6	7	-20/-29
	2	277	105	0.38 A	0.95	0.90	98	1.6	8	-20/-29
	1	120	69	0.58 A	1.09	1.58	99	1.6	7	-20/-29
F58T8	1	277	69	0.25 A	1.09	1.58	97	1.6	11	-20/-29
	2	120	89	0.75 A	1.17	1.31	99	1.6	7	-20/-29
	2	277	84	0.31 A	1.17	1.39	98	1.6	9	-20/-29
	1	120	55	0.46 A	1.29	2.35	99	1.6	7	-20/-29
FT39W/4P	1	277	55	0.21 A	1.28	2.33	96	1.6	15	-20/-29
	2	120	118	1.01 A	1.12	0.85	98	1.7	10	-20/-29
	2	277	115	0.43 A	1.12	0.91	98	1.7	10	-20/-29
	1	120	61	0.52 A	1.15	1.58	98	1.7	10	-20/-29
FT50W/4P	1	277	61	0.23 A	1.15	1.61	90	1.7	10	-20/-29
	2	120	112	0.94 A	0.91	0.80	98	1.7	10	-20/-29
	2	277	109	0.4 A	0.91	0.80	98	1.7	10	-20/-29
	1	120	58	0.51 A	0.93	1.49	98	1.7	10	-20/-29
FT55W/4P	1	277	58	0.22 A	0.93	1.51	90	1.7	10	-20/-29

Safety and performance

Product is compliant with material restriction requirements of RoHS UL Type 1 Outdoor UL Type HL FCC – CLASS A Non-Consumer ANSI-C62.41-1991

ANSI-C82.11-Cons 2002 UL Class P UL Type CC UL Listed CSA

High Temperature Rated: Suitable for high temperature applications 70C max case temp 5 yr warranty or 90C max case temp 3 yr warranty

See page E-1 for warranty information.

*T5 lamp lengths are noted to nearest foot and are not exact lengths as noted in feet. See GE Lamp Catalog for exact lamp length.

T5 High Output – Programmed Start

T5 Electronic Programmed Start For T5 HO Lamps*

94131 – GE454MVPS90-E-S (replaces 73192)

T5 High Output - UltraStart® Programmed Start

4/2 – F54T5HO 120 to 277 UltraStart® PRS High Temp E Can

- High Efficiency T5 ballast with Continuous Cathode Cutout Technology
- Lower Maintenance Costs with Parallel Lamp Operation
- Multi-Voltage technology means a single ballast handles voltage from 108V to 305V
- Auto-Restart withstands temporary losses in power without the need to cycle power
- UltraCool® Operation 90°C case rating
- Anti-Striation Control for better light quality, with no striations.
- Individual lamp End of Lamp Life protection - only one lamp shuts down at end of life.
- Cold temperature -20F Minimum Starting Temperature
- The ballast should have the step dimming features and be able to provide 50% input power (+/-15%) in the dimming mode by shutdown 2 of the 4 lamps.

General characteristics

Ballast Type	Electronic - Program / Rapid Start
Starting Method	Programmed start
Lamp Wiring	Parallel
Line Voltage Regulation (+/-)	10%
Ambient Temperature (MAX)	55°C (131°F)
Case Temperature (MAX)	90°C (194°F)
Ballast Factor	Normal
Power Factor Correction	Active
Sound Rating	A (20-24 decibels)
Enclosure Type	Metal
Additional Info	Auto-restart, End of Life Protection (EOL), Thermally protected

Electrical characteristics

Supply Current Frequency	50Hz/60 Hz

Order information

10 Pack	Pallet Pack	DIY Pack	IP Pack
94131			

Dimensions

Wiring diagram – LFL 4c – see example on page 13-17	
Case dimensions – Ref Drawing -G Can – see page 13-19	
Length (L)	16.7 in (424 mm)
Width (W)	1.7 in (41 mm)
Height (H)	1.2 in (30.5 mm)
Mounting dimensions	
Mount Length (M)	16.1 in (410 mm)
Weight	2.73 lbs
Exit Type	Side
Remote Mounting Distance to Lamp	12 ft
Remote Mounting Wire Gauge	18 AWG
Lead lengths	**Length (± 1 in.)**
Black/White	25.0 in (635 mm)
Blue	34.0 in (864 mm)
Blue/White	34.0 in (864 mm)
Gray	25.0 in (635 mm)
Orange	47.0 in (1195 mm)
Red	34.0 in (864 mm)
Red/White	34.0 in (864 mm)
Yellow	47.0 in (1195 mm)

Specifications by lamp and wattage

Lamp	# of Lamps	Line Volts	System Watts	Nom. Line Current	System Ballast Factor	Ballast Efficacy Factor	Power Factor% (>=)	Crest Factor (<=)	THD% (<=)	Min. Starting Temp (°F/°C)
	4	277	222	0.84 A	1.00	0.45	99	1.7	4	-20/-29
	3	277	171	0.66 A	1.01	0.59	99	1.7	5	-20/-29
	2	277	114	0.44 A	1.00	0.87	98	1.7	8	-20/-29
	4	120	227	2.02 A	0.99	0.44	99	1.7	6	-20/-29
	3	120	174	1.59 A	0.99	0.57	99	1.7	7	-20/-29
F54T5/HO	2	120	114	1.02 A	1.00	0.87	99	1.7	8	-20/-29
	4	277	204	0.76 A	1.00	0.49	99	1.7	4	-20/-29
	3	277	160	0.61 A	1.00	0.62	99	1.7	6	-20/-29
	2	277	105	0.39 A	1.00	0.95	98	1.7	7	-20/-29
	4	120	208	1.83 A	1.00	0.48	99	1.7	4	-20/-29
	3	120	162	1.44 A	1.00	0.62	99	1.7	7	-20/-29
F54T5/47W	2	120	105	0.92 A	1.00	0.95	99	1.7	9	-20/-29
	4	277	210	0.76 A	1.03	0.49	99	1.7	4	-20/-29
	3	277	164	0.61 A	1.03	0.63	99	1.7	5	-20/-29
	2	277	109	0.39 A	1.03	0.95	98	1.7	7	-20/-29
	4	120	215	1.83 A	1.04	0.48	99	1.7	6	-20/-29
	3	120	166	1.44 A	1.04	0.63	99	1.7	7	-20/-29
F54T5/49W	2	120	109	0.92 A	1.05	0.97	99	1.7	9	-20/-29
	4	277	211	0.78 A	1.01	0.48	99	1.7	4	-20/-29
	3	277	165	0.63 A	1.02	0.62	99	1.7	5	-20/-29
	2	277	109	0.41 A	1.04	0.95	98	1.7	7	-20/-29
	4	120	216	1.89 A	1.04	0.48	99	1.7	6	-20/-29
	3	120	168	1.49 A	1.03	0.61	99	1.7	7	-20/-29
F54T5WM	2	120	109	0.96 A	1.03	0.94	99	1.7	9	-20/-29
	4	277	208	0.77 A		0.00	99	1.7	4	-20/-29
	3	277	161	0.61 A		0.00	99	1.7	6	-20/-29
	2	277	107	0.40 A		0.00	98	1.7	8	-20/-29
	4	120	213	1.85 A		0.00	99	1.7	6	-20/-29
	3	120	164	1.44 A		0.00	99	1.7	7	-20/-29
F58T8	2	120	107	0.94 A		0.00	99	1.7	9	-20/-29
	4	277	210	0.77 A	0.92	0.44	99	1.7	4	0/-18
	3	277	162	0.62A	0.91	0.56	99	1.7	5	0/-18
	2	277	109	0.40 A	0.92	0.85	98	1.7	7	0/-18
	4	120	215	1.87 A	0.91	0.42	99	1.7	6	0/-18
	3	120	165	1.47 A	0.91	0.55	99	1.7	7	0/-18
FT55W/2G11	2	120	109	0.93 A	0.93	0.85	99	1.7	9	0/-18
	4	277	219	0.83 A	0.90	0.41	99	1.7	4	0/-18
	3	277	170	0.66 A	0.90	0.53	99	1.7	5	0/-18
	2	277	112	0.43 A	0.90	0.80	98	1.7	8	0/-18
	4	120	224	2.01 A	0.89	0.40	99	1.7	6	0/-18
	3	120	172	1.57 A	0.89	0.52	99	1.7	7	0/-18
FT50W/2G11	2	120	112	1.00 A	0.90	0.80	99	1.7	9	0/-18

Safety and performance

Product is compliant with material restriction requirements of RoHS UL Type 1 Outdoor UL Type HL FCC – CLASS A Non-Consumer ANSI-C62.41-1991

ANSI-C82.11-Cons 2002 UL Class P UL Type CC UL Listed cUL Listed No PCB's For one lamp operation, safety only DOE 2014 ballast rule - 10 CFR Part 430

High Temperature Rated: Suitable for high temperature applications 70C max case temp 5 yr warranty or 90C max case temp 3 yr warranty

See page E-1 for warranty information.

T5 High Output – Programmed Start

T5 Electronic Programmed Start For T5 HO Lamps*

67566 – GE454MVPS90-F (replaces 77114)

T5 High Output - UltraStart® Programmed Start

4-1 – F54T5HO 120 to 277 UltraStart® PS F Can

- High Efficiency T5 ballast with Continuous Cathode Cutout Technology
- Lower Maintenance Costs with Parallel Lamp Operation
- Fast Starting Time <700ms
- Multi-Voltage technology means a single ballast handles voltage from 108V to 305V
- Auto-Restart withstands temporary losses in power without the need to cycle power
- Anti-Striation Control for better light quality, with no striations
- 90°C case rating/UL Approved 55C Ambient Rating
- Individual lamp End of Lamp Life protection - only one lamp shuts down at end of life
- Cold temperature -20°F Minimum Starting Temperature

General characteristics

Ballast Type	Electronic - Program / Rapid Start
Starting Method	Programmed start
Lamp Wiring	Parallel
Line Voltage Regulation (+/-)	10%
Ambient Temperature (MAX)	55°C (131°F)
Case Temperature (MAX)	90°C (194°F)
Ballast Factor	Normal
Power Factor Correction	Active
Sound Rating	A (20-24 decibels)
Enclosure Type	Metal
Additional Info	Auto-restart, End of Life Protection (EOL), Thermally protected

Electrical characteristics

Supply Current Frequency	50Hz/60 Hz

Order information

10 Pack	Pallet Pack	DIY Pack	IP Pack
65766	.		

Dimensions

Wiring diagram – LFL PS4– see example on page 13-18	
Case dimensions – Ref Drawing -E Can – see page 13-19	
Length (L)	11.75 in (298 mm)
Width (W)	1.7 in (43 mm)
Height (H)	1.2 in (30 mm)
Mounting dimensions	
Mount Length (M)	16.7 in (424 mm)
Weight	2.79 lbs
Exit Type	Side
Remote Mounting Distance to Lamp	8 ft
Remote Mounting Wire Gauge	18 AWG
Lead lengths	**Length (± 1 in.)**
Black	25.0 in (635 mm)
White	25.0 in (635 mm)

Specifications by lamp and wattage

Lamp	# of Lamps	Line Volts	System Watts	Nom. Line Current	System Ballast Factor	Ballast Efficacy Factor	Power Factor% (>=)	Crest Factor (<=)	THD% (<=)	Min. Starting Temp (°F/°C)
	4	120	206	1.73 A	0.86	0.42	99	1.4	5	0/-18
	4	277	203	0.75 A	0.86	0.42	97	1.4	8	0/-18
	3	120	168	1.41 A	0.91	0.54	99	7.0	6	0/-18
	3	277	168	0.63 A	0.91	0.54	97	1.4	10	0/-18
	2	120	125	1.04 A			99	1.4	7	0/-18
	2	277	124	0.48 A			94	1.4	16	0/-18
	1	120	64	0.54 A			99	1.4	10	0/-18
FT55W/4P	1	277	66	0.28 A			84	1.4	25	0/-18
	4	120	222	1.86 A	1.06	0.48	99	1.4	5	0/-18
	4	277	218	0.81 A	1.06	0.49	98	1.4	8	0/-18
	3	120	187	1.56 A	1.11	0.59	99	1.4	6	0/-18
	3	277	184	0.68 A	1.11	0.60	97	1.4	9	0/-18
	2	120	130	1.09 A			99	1.4	7	0/-18
	2	277	130	0.50 A			95	1.4	15	0/-18
	1	120	72	0.60 A			99	1.4	10	0/-18
FT50W/4P	1	277	73	0.31 A			85	1.4	26	0/-18
	4	120	208	1.73 A	0.95	0.46	99	1.4	5	-20/-29
	4	277	204	0.76 A	0.95	0.47	97	1.4	9	-20/-29
	3	120	176	1.47 A	0.99	0.56	99	1.4	6	-20/-29
	3	277	173	0.65 A	0.99	0.57	94	1.4	10	-20/-29
	2	120	128	1.07 A			99	1.4	7	-20/-29
	2	277	127	0.49 A			94	1.4	16	-20/-29
	1	120	67	0.57 A			99	1.4	10	-20/-29
F58T8	1	277	68	0.29 A			85	1.4	25	-20/-29
	4	120	214	1.79 A	1.00	0.47	99	1.4	5	0/-18
	4	277	210	0.78 A	1.00	0.48	98	1.4	8	0/-18
	3	120	181	1.51 A	1.01	0.56	99	1.4	6	0/-18
	3	277	178	0.66 A	1.01	0.57	97	1.4	9	0/-18
	2	120	130	1.09 A	0.96	0.74	99	1.4	7	0/-18
	2	277	135	0.51 A	0.96	0.71	95	1.4	15	0/-18
	1	120	69	0.58 A	1.12	1.62	99	1.4	10	0/-18
F54T5/WM	1	277	70	0.30 A	1.12	1.60	85	1.4	26	0/-18
	4	120	220	1.84 A	1.00	0.45	99	1.4	5	-20/-29
	4	277	216	0.80 A	1.00	0.46	98	1.4	8	-20/-29
	3	120	185	1.55 A	1.01	0.55	99	1.4	6	-20/-29
	3	277	182	0.68 A	1.01	0.55	97	1.4	9	-20/-29
	2	120	133	0.58 A	0.96	0.72	99	1.4	7	-20/-29
	2	277	132	0.50 A	0.96	0.72	95	1.4	15	-20/-29
	1	120	69	0.58 A	1.11	1.61	99	1.4	10	-20/-29
F54T5/HO	1	277	70	0.30 A	1.11	1.59	85	1.4	26	-20/-29

Safety and performance

Product is compliant with material restriction requirements of RoHS UL Type 1 Outdoor UL Type HL FCC – CLASS A Non-Consumer ANSI-C62.41-1991

ANSI-C82.11-Cons 2002 UL Class P UL Type CC UL Listed CSA

High Temperature Rated: Suitable for high temperature applications 70C max case temp 5 yr warranty or 90C max case temp 3 yr warranty

See page E-1 for warranty information.

*T5 lamp lengths are noted to nearest foot and are not exact lengths as noted in feet. See GE Lamp Catalog for exact lamp length.

T5 High Output – Programmed Start

T5 Electronic Programmed Start For T5 HO Lamps*

72280 – GE180MVPS-D

T5 High Output - UltraStart® Programmed Start

1 – F80T5HO 120 to 277 UltraStart® PRS D Can

- High Efficiency T5 ballast with Continuous Cathode Cutout Technology
- Lower Maintenance Costs with Parallel Lamp Operation
- Fast Starting Time <700ms
- Multi-Voltage technology means a single ballast handles voltage from 108V to 305V
- Auto-Restart withstands temporary losses in power without the need to cycle power
- Anti-Striation Control for better light quality, with no striations.
- Cold temperature -20°F Minimum Starting Temperature

General characteristics

Ballast Type	Electronic - Program / Rapid Start
Starting Method	Programmed start
Line Voltage Regulation (+/-)	10%
Ambient Temperature (MAX)	55°C (131°F)
Case Temperature (MAX)	70°C (158°F)
Ballast Factor	Normal
Power Factor Correction	Active
Sound Rating	A (20-24 decibels)
Enclosure Type	Metal
Additional Info	Auto-restart, End of Life Protection (EOL), Thermally protected, Universal voltage

Electrical characteristics

Supply Current Frequency	50Hz/60 Hz

Order information

10 Pack	Pallet Pack	DIY Pack	IP Pack
72280			

Dimensions

Wiring diagram – LFL PS1b – see example on page 13-18	
Case dimensions – Ref Drawing -D Can – see page 13-19	
Length (L)	16.7 in (424 mm)
Width (W)	1.18 in (30 mm)
Height (H)	1.0 in (25 mm)
Mounting dimensions	
Mount Length (M)	16.4 in (417 mm)
Weight	1.85 lbs
Exit Type	Side
Remote Mounting Distance to Lamp	8 ft
Remote Mounting Wire Gauge	18 AWG

Specifications by lamp and wattage

Lamp	# of Lamps	Line Volts	System Watts	Nom. Line Current	System Ballast Factor	Ballast Efficacy Factor	Power Factor% (>=)	Crest Factor (<=)	THD% (<=)	Min. Starting Temp (°F/°C)
	1	120	93	0.78 A	1.00	1.08	99	1.6	5	-20/-29
F80T5HO	1	277	91	0.34 A	1.00	1.10	98	1.6	8	-20/-29

Safety and performance

Product is compliant with material restriction requirements of RoHS UL Type 1 Outdoor UL Type HL FCC – CLASS A Non-Consumer ANSI-C62.41-1991

ANSI-C82.11-Cons 2002 UL Class P UL Type CC UL Listed CSA

See page E-1 for warranty information.

T5 Watt-Miser Electronic Program / Rapid Start Ballast
T5 Electronic Programmed Start

62728 – GE254PS347/480-F

T5 High Output - UltraStart® Programmed Rapid Start

2 or 1 – F54T5HO 347 to 480V PS High Temperature F Can LFL

- High Efficiency T5 ballast with Continuous Cathode Cutout Technology
- Lower Maintenance Costs with Parallel Lamp Operation
- Fast Starting Time <700ms
- GE 3-Stage 3G Transient Suppression - Meets IEEE/ANSI C Low line to line transient capability up to 6KV
- Auto-Restart withstands temporary losses in power without the need to cycle power
- Anti-Striation Control for better light quality, with no striations.
- 90°C case rating/UL Approved 55C Ambient Rating
- Individual lamp End of Lamp Life protection - only one lamp shuts down at end of life
- Cold temperature -20°F Minimum Starting Temperature

General characteristics

Ballast Type	Electronic - Program / Rapid Start
Starting Method	Programmed Rapid Start
Lamp Wiring	Parallel
Line Voltage Regulation (+/-)	10%
Ambient Temperature (MAX)	55°C (131°F)
Case Temperature (MAX)	90°C (194°F)
Ballast Factor	Normal
Power Factor Correction	Active
Sound Rating	A (20-24 decibels)
Enclosure Type	Metal Can
Additional Info	Lamp End-of-Life Safety Shutdown Circuit/Auto-restart/ Anti-striation control

Electrical characteristics

Supply Current Frequency	50 Hz/60 Hz

Order information

10 Pack	Pallet Pack	DIY Pack	IP Pack
62728	.		

Dimensions

Wiring diagram – LFL 4a– see example on page 13-17	
Case dimensions – Ref Drawing -F Can – see page 13-19	
Length (L)	11.8 in (298 mm)
Width (W)	1.7 in (43 mm)
Height (H)	1.2 in (30 mm)
Mounting dimensions	
Mount Length (M)	11.1 in (282 mm)
Weight	2.15 lbs
Exit Type	Side
Remote Mounting Distance to Lamp	12 ft
Remote Mounting Wire Gauge	18 AWG
Lead lengths	**Length (± 1 in.)**
Black	25.0 in (635 mm)
Black/White	25.0 in (635 mm)
Blue	34.0 in (864 mm)
Red	34.0 in(864 mm)
Yellow	45.0 in (1143 mm)

Specifications by lamp and wattage

Lamp	# of Lamps	Line Volts	System Watts	Nom. Line Current	System Ballast Factor	Ballast Efficacy Factor	Power Factor% (>=)	Crest Factor (<=)	THD% (<=)	Min. Starting Temp (°F/°C)
	2	347	118	0.36 A	1.00	1.69	98	1.4	5	-22/-30
	2	480	118	0.26 A	1.00	1.69	99	1.4	6	-22/-30
	1	347	73	0.22 A	1.10	1.37	98	1.4	5	-22/-30
F54T5/HO	1	480	73	0.16 A	1.10	1.37	96	1.4	8	-22/-30
	2	347	113	0.33 A	1.06	1.77	99	1.4	5	0/-18
	2	480	114	0.24 A	1.06	1.75	97	1.4	6	0/-18
	1	347	69	0.20 A	1.18	1.45	98	1.4	5	0/-18
FT50W/2G11	1	480	69	0.15 A	1.18	1.45	95	1.4	8	0/-18
	2	347	113	0.33 A	1.00	1.77	99	1.4	5	0/-18
	2	480	113	0.24 A	1.00	1.77	97	1.4	6	0/-18
	1	347	69	0.20 A	1.12	1.45	98	1.4	6	0/-18
F54T5/WM	1	480	69	0.15 A	1.12	1.43	95	1.4	8	0/-18
	2	347	109	0.32 A	0.86	1.83	99	1.4	5	0/-18
	2	480	109	0.24 A	0.86	1.83	97	1.4	6	0/-18
	1	347	68	0.20 A	1.03	1.47	98	1.4	6	0/-18
FT55W/4P	1	480	68	0.15 A	1.03	1.47	95	1.4	8	0/-18
	2	347	107	0.31 A	1.00	1.87	99	1.4	5	0/-18
	2	480	107	0.23 A	1.00	1.87	97	1.4	6	0/-18
	1	347	65	0.19 A	1.10	1.56	98	1.4	5	0/-18
F54T5/49W	1	480	65	0.14 A	1.10	1.54	95	1.4	8	0/-18
	2	347	104	0.31 A	1.00	1.92	99	1.4	5	0/-18
	2	480	104	0.22 A	1.00	1.92	97	1.4	6	0/-18
	1	347	63	0.19 A	1.10	1.59	98	1.4	6	0/-18
F54T5/47W	1	480	64	0.14 A	1.10	1.56	95	1.4	8	0/-18
	2	347	101	0.33 A	0.95	1.98	99	1.4	5	-22/-30
	2	480	10	0.24 A	0.95	1.98	97	1.4	6	-22/-30
	1	347	68	0.20 A	1.08	1.47	98	1.4	6	-22/-30
F58T8	1	480	69	0.15 A	1.08	1.45	95	1.4	6	-22/-30

Safety and performance

Product is compliant with material restriction requirements of RoHS UL Type 1 Outdoor UL Type HL FCC – CLASS A Non-Consumer ANSI-C62.41-1991 ANSI-C82.11-Cons 2002 ANSI-C62.41-2002 UL Class P UL Type CC UL 55C Ambient Approved CSA

High Temperature Rated: Suitable for high temperature applications No PCB's 70C max case temp 5 yr warranty or 90C max case temp 3 yr warranty

See page E-1 for warranty information.

*T5 lamp lengths are noted to nearest foot and are not exact lengths as noted in feet. See GE Lamp Catalog for exact lamp length.

T5 Watt-Miser Electronic Program / Rapid Start Ballast
T5 Electronic Programmed Start

62729 – GE254PS347-F

T5 High Output - UltraStart® Programmed Rapid Start

2 or 1 – F54T5HO 347V F Can LFL

- High Efficiency T5 ballast with Continuous Cathode Cutout Technology
- Lower Maintenance Costs with Parallel Lamp Operation
- Fast Starting Time <700ms
- Auto-Restart withstands temporary losses in power without the need to cycle power
- Anti-Striation Control for better light quality, with no striations.
- 90°C case rating/UL Approved 55C Ambient Rating
- Individual lamp End of Lamp Life protection - only one lamp shuts down at end of life
- Cold temperature -20°F Minimum Starting Temperature

General characteristics

Ballast Type	Electronic - Program / Rapid Start
Starting Method	Programmed Rapid Start
Lamp Wiring	Parallel
Line Voltage Regulation (+/-)	10%
Ambient Temperature (MAX)	55°C (131°F)
Case Temperature (MAX)	90°C (194°F)
Ballast Factor	Normal
Power Factor Correction	Active
Sound Rating	A (20-24 decibels)
Enclosure Type	Metal Can
Additional Info	Lamp End-of-Life Safety Shutdown Circuit/Auto-restart/ Anti-striation control

Electrical characteristics

Supply Current Frequency	50 Hz/60 Hz

Order information

10 Pack	Pallet Pack	DIY Pack	IP Pack
62729	.		

Dimensions

Wiring diagram – LFL 4a– see example on page 13-17	
Case dimensions – Ref Drawing -F Can – see page 13-19	
Length (L)	11.8 in (298 mm)
Width (W)	1.7 in (43 mm)
Height (H)	1.2 in (30 mm)
Mounting dimensions	
Mount Length (M)	11.1 in (282 mm)
Weight	2.15 lbs
Exit Type	Side
Remote Mounting Distance to Lamp	12 ft
Remote Mounting Wire Gauge	18 AWG
Lead lengths	**Length (± 1 in.)**
Black	25.0 in (635 mm)
Black/White	25.0 in (635 mm)
Blue	34.0 in (864 mm)
Red	34.0 in(864 mm)
Yellow	45.0 in (1143 mm)

Specifications by lamp and wattage

Lamp	# of Lamps	Line Volts	System Watts	Nom. Line Current	System Ballast Factor	Ballast Efficacy Factor	Power Factor% (>=)	Crest Factor (<=)	THD% (<=)	Min. Starting Temp (°F/°C)
	2	347	118	0.36 A	1.00	1.69	99	1.4	5	-22/-30
F54T5/HO	1	347	73	0.22 A	1.10	1.37	98	1.4	5	-22/-30
	2	347	113	0.33 A	1.06	1.77	99	1.4	5	0/-18
FT50W/2G11	1	347	69	0.20 A	1.18	1.45	98	1.4	5	0/-18
	2	347	113	0.33 A	1.00	1.77	99	1.4	5	-22/-30
F54T5/WM	1	347	69	0.20 A	1.12	1.45	98	1.4	6	-22/-30
	2	347	109	0.32 A	0.86	1.83	99	1.4	5	0/-18
FT55W/4P	1	347	68	0.20 A	1.03	1.47	98	1.4	6	0/-18
	2	347	107	0.31 A	1.00	1.87	99	1.4	5	0/-18
F54T5/49W	1	347	64	0.19 A	1.10	1.56	98	1.4	6	0/-18
	2	347	104	0.31 A	1.00	1.92	99	1.4	5	0/-18
F54T5/47W	1	347	63	0.19 A	1.10	1.59	98	1.4	6	0/-18
	2	347	101	0.33 A	0.95	1.98	99	1.4	5	-22/-30
F58T8	1	347	68	0.20 A	1.08	1.47	98	1.4	6	-22/-30

Safety and performance

Product is compliant with material restriction requirements of RoHS UL Type 1 Outdoor UL Type HL FCC – CLASS A Non-Consumer ANSI-C62.41-1991 ANSI-C82.11-Cons 2002 ANSI-C62.41-2002 UL Class P UL Type CC UL 55C Ambient Approved CSA

High Temperature Rated: Suitable for high temperature applications No PCB's 70C max case temp 5 yr warranty or 90C max case temp 3 yr warranty

See page E-1 for warranty information.

TT5 Watt-Miser Electronic Program / Rapid Start Ballast

T5 Electronic Programmed Start

62730 – GE454PS347/480-E

T5 High Output - UltraStart® Programmed Rapid Start

4-1 - F54T5HO 347 to 480V High Temperature E Can LFL

- High Efficiency T5 ballast with Continuous Cathode Cutout Technology
- Lower Maintenance Costs with Parallel Lamp Operation
- Fast Starting Time <700ms
- GE 3-Stage 3G Transient Suppression - Meets IEEE/ANSI C Low line to line transient capability up to 6KV
- Auto-Restart withstands temporary losses in power without the need to cycle power
- Anti-Striation Control for better light quality, with no striations.
- 90°C case rating/UL Approved 55C Ambient Rating
- Individual lamp End of Lamp Life protection - only one lamp shuts down at end of life
- Cold temperature -20°F Minimum Starting Temperature

General characteristics

Ballast Type	Electronic - Program / Rapid Start
Starting Method	Programmed Rapid Start
Lamp Wiring	Parallel
Line Voltage Regulation (+/-)	10%
Ambient Temperature (MAX)	55°C (131°F)
Case Temperature (MAX)	90°C (194°F)
Ballast Factor	Normal
Power Factor Correction	Active
Sound Rating	A (20-24 decibels)
Enclosure Type	Metal Can
Additional Info	Lamp End-of-Life Safety Shutdown Circuit/Auto-restart/ Anti-striation control

Electrical characteristics

Supply Current Frequency	50 Hz/60 Hz

Order information

8 Pack	Pallet Pack	DIY Pack	IP Pack
62730			

Dimensions

Wiring diagram – LFL 4a– see example on page 13-17	
Case dimensions – Ref Drawing -E Can – see page 13-19	
Length (L)	16.7 in (424 mm)
Width (W)	1.7 in (43 mm)
Height (H)	1.2 in (30 mm)
Mounting dimensions	
Mount Length (M)	16.1 in (408 mm)
Weight	2.5 lbs
Exit Type	Side
Remote Mounting Distance to Lamp	12 ft
Remote Mounting Wire Gauge	18 AWG
Lead lengths	**Length (± 1 in.)**
Black	25.0 in (635 mm)
White	25.0 in (635 mm)
Blue	34.0 in (864 mm)
Blue/White	34.0 in (864 mm)
Red	34.0 in (864 mm)
Red/White	34.0 in (864 mm)
Yellow	35.0 in (889 mm)

Specifications by lamp and wattage

Lamp	# of Lamps	Line Volts	System Watts	Nom. Line Current	System Ballast Factor	Ballast Efficacy Factor	Power Factor% (>=)	Crest Factor (<=)	THD% (<=)	Min. Starting Temp (°F/°C)
	4	347	229	0.68 A	1.00	1.75	99	1.4	5	-22/-30
	4	480	228	0.49 A	1.00	1.75	98	1.4	7	-22/-30
	3	347	176	0.53 A	1.01	1.70	99	1.4	5	-22/-30
	3	480	177	0.38 A	1.01	1.69	98	1.4	8	-22/-30
	2	347	125	0.37 A	0.96	1.60	99	1.4	7	-22/-30
	2	480	125	0.27 A	0.96	1.60	96	1.4	12	-22/-30
	1	347	68	0.21 A	1.12	1.47	94	1.4	16	-22/-30
F54T5/HO	1	480	69	0.18 A	1.12	1.45	81	1.4	35	-22/-30
	4	347	227	0.68 A	1.06	1.76	99	1.4	5	0/-18
	4	480	226	0.49 A	1.06	1.77	98	1.4	7	0/-18
	3	347	177	0.53 A	1.11	1.69	99	1.4	5	0/-18
	3	480	177	0.38 A	1.11	1.69	98	1.4	8	0/-18
	2	347	126	0.37 A		1.59	99	1.4	6	0/-18
	2	480	126	0.28 A		1.59	96	1.4	12	0/-18
	1	347	69	0.22 A		1.47	94	1.4	16	0/-18
FT50W/4P	1	480	69	0.19 A		1.45	80	1.4	34	0/-18
	4	347	221	0.66 A	0.86	1.81	99	1.4	5	0/-18
	4	480	220	0.47 A	0.86	1.82	98	1.4	7	0/-18
	3	347	173	0.51 A	0.91	1.73	99	1.4	5	0/-18
	3	480	173	0.37 A	0.91	1.73	98	1.4	8	0/-18
	2	347	123	0.37 A		1.63	99	1.4	7	0/-18
	2	480		0.27 A	1.24	1.61	96	1.4	12	0/-18
	1	347	68	0.22 A		1.47	92	1.4	19	0/-18
FT55W/4P	1	480	69	0.19 A		1.45	77	1.4	40	0/-18
	4	347	219	0.65 A	1.00	1.83	99	1.4	5	0/-18
	4	480	218	0.47 A	1.00	1.83	98	1.4	7	0/-18
	3	347	171	0.51 A	1.01	1.75	99	1.4	5	0/-18
	3	480	171	0.37 A	1.01	1.75	98	1.4	8	0/-18
	2	347	121	0.36 A	0.96	1.65	99	1.4	6	0/-18
	2	480	122	0.27 A	0.96	1.64	96	1.4	12	0/-18
	1	347	66	0.21 A	1.12	1.52	94	1.4	14	0/-18
F54T5/WM	1	480	67	0.17 A	1.12	1.49	82	1.4	37	0/-18
	4	347	209	0.62 A	0.95	1.91	99	1.4	5	-22/-30
	4	480	208	0.45 A	0.95	1.92	98	1.4	7	-22/-30
	3	347	164	0.49 A	0.99	1.83	99	1.4	5	-22/-30
	3	480	165	0.36 A	0.99	1.82	97	1.4	8	-22/-30
	2	347	117	0.35 A	0.96	1.71	99	1.4	6	-22/-30
	2	480	118	0.26 A	0.96	1.69	96	1.4	12	-22/-30
	1	347	65	0.20 A	1.12	1.54	97	1.4	9	-22/-30
F58T8	1	480	66	0.15 A	1.12	1.52	91	1.4	16	-22/-30
	4	347	206	0.63 A	1.00	1.94	99	1.4	5	0/-18
	4	480	205	0.44 A	1.00	1.95	98	1.4	7	0/-18
	3	347	161	0.48 A	1.04	1.86	99	1.4	5	0/-18
	3	480	162	0.35 A	1.04	1.85	97	1.4	8	0/-18
	2	347	117	0.35 A	1.06	1.71	99	1.4	6	0/-18
	2	480	118	0.26 A	1.06	1.69	96	1.4	12	0/-18
	1	347	65	0.20 A	1.08	1.54	97	1.4	10	0/-18
F54T5/47W	1	480	66	0.15 A	1.08	1.52	90	1.4	18	0/-18

Safety and performance

Product is compliant with material restriction requirements of RoHS UL Type 1 Outdoor UL Type HL FCC – CLASS A Non-Consumer ANSI-C62.41-1991 ANSI-C82.11-Cons 2002 ANSI-C62.41-2002 UL Class P UL Type CC UL 55C Ambient Approved

High Temperature Rated: Suitable for high temperature applications No PCB's

See page E-1 for warranty information.

*T5 lamp lengths are noted to nearest foot and are not exact lengths as noted in feet. See GE Lamp Catalog for exact lamp length.

T5 Watt-Miser Electronic Program / Rapid Start Ballast
T5 Electronic Programmed Start

62731 – GE454PS347-E

T5 High Output - UltraStart® Programmed Rapid Start

4-1 - F54T5HO 347V LFL E Can

- High Efficiency T5 ballast with Continuous Cathode Cutout Technology
- Lower Maintenance Costs with Parallel Lamp Operation
- Fast Starting Time <700ms
- Auto-Restart withstands temporary losses in power without the need to cycle power
- Anti-Striation Control for better light quality, with no striations.
- 90°C case rating/UL Approved 55C Ambient Rating
- Individual lamp End of Lamp Life protection - only one lamp shuts down at end of life
- Cold temperature -20°F Minimum Starting Temperature

General characteristics

Ballast Type	Electronic - Program / Rapid Start
Starting Method	Programmed Rapid Start
Lamp Wiring	Parallel
Line Voltage Regulation (+/-)	10%
Ambient Temperature (MAX)	
Case Temperature (MAX)	70°C (158°F)
Ballast Factor	Normal
Power Factor Correction	Active
Sound Rating	A (20-24 decibels)
Enclosure Type	Metal Can
Additional Info	Lamp End-of-Life Safety Shutdown Circuit/Auto-restart/ Anti-striation control

Electrical characteristics

Supply Current Frequency	50 Hz/60 Hz

Order information

8 Pack	Pallet Pack	DIY Pack	IP Pack
62731			

Dimensions

Wiring diagram – LFL 4b– see example on page 13-17	
Case dimensions – Ref Drawing -E Can – see page 13-19	
Length (L)	16.7 in (424 mm)
Width (W)	1.7 in (43 mm)
Height (H)	1.2 in (30 mm)
Mounting dimensions	
Mount Length (M)	16.1 in (409 mm)
Weight	2.5 lbs
Exit Type	Side
Remote Mounting Distance to Lamp	12 ft
Remote Mounting Wire Gauge	18 AWG
Lead lengths	**Length (± 1 in.)**
Black	25.0 in (635 mm)
White	25.0 in (635 mm)
Blue	34.0 in (864 mm)
Blue/White	34.0 in (864 mm)
Red	34.0 in (864 mm)
Red/White	34.0 in (864 mm)
Yellow	35.0 in (889 mm)

Specifications by lamp and wattage

Lamp	# of Lamps	Line Volts	System Watts	Nom. Line Current	System Ballast Factor	Ballast Efficacy Factor	Power Factor% (>=)	Crest Factor (<=)	THD% (<=)	Min. Starting Temp (°F/°C)
	4	347	229	0.68 A	1.00	1.75	99	1.4	5	-22/-30
	3	347	176	0.53 A	1.01	1.70	99	1.4	5	-22/-30
	2	347	125	0.37 A	0.96	1.60	99	1.4	7	-22/-30
F54T5/HO	1	347	68	0.21 A	1.12	1.47	94	1.4	16	-22/-30
	4	347	227	0.68 A	1.06	1.76	99	1.4	5	0/-18
	3	347	177	0.53 A	1.11	1.69	99	1.4	5	0/-18
	2	347	126	0.37 A		1.59	99	1.4	6	0/-18
FT50W/4P	1	347	69	0.22 A		1.47	94	1.4	16	0/-18
	4	347	221	0.66 A	0.86	1.81	99	1.4	5	0/-18
	3	347	173	0.51 A	0.91	1.73	99	1.4	5	0/-18
	2	347	123	0.37 A		1.63	99	1.4	7	0/-18
FT55W/4P	1	347	68	0.22 A		1.47	92	1.4	19	0/-18
	4	347	219	0.65 A	1.00	1.83	99	1.4	5	0/-18
	3	347	171	0.51 A	1.01	1.75	99	1.4	5	0/-18
	2	347	121	0.36 A	0.96	1.65	99	1.4	6	0/-18
F54T5/WM	1	347	66	0.21 A	1.12	1.52	94	1.4	14	0/-18
	4	347	209	0.62 A	0.95	1.91	99	1.4	5	-22/-30
	3	347	164	0.49 A	0.99	1.83	99	1.4	5	-22/-30
	2	347	117	0.35 A	0.96	1.71	99	1.4	6	-22/-30
F58T8	1	347	65	0.20 A	1.12	1.54	97	1.4	9	-22/-30
	4	347	206	0.63 A	1.00	1.94	99	1.4	5	0/-18
	3	347	161	0.48 A	1.04	1.86	99	1.4	5	0/-18
	2	347	117	0.35 A	1.06	1.71	99	1.4	6	0/-18
F54T5/47W	1	347	65	0.20 A	1.08	1.54	97	1.4	10	0/-18

Safety and performance

Product is compliant with material restriction requirements of RoHS UL Type 1 Outdoor UL Type HL FCC – CLASS A Non-Consumer ANSI-C62.41-1991 ANSI-C82.11-Cons 2002 ANSI-C62.41-2002 UL Class P UL Type CC UL 55C Ambient Approved

High Temperature Rated: Suitable for high temperature applications No PCB's 70C max case temp 5 yr warranty or 90C max case temp 3 yr warranty

See page E-1 for warranty information.

Step Down Transformers
T5 Electronic Programmed Start Ballasts

74119 – GETR480/277-250W

Step Down Transformers

Non-Isolated Autotransformer 480 to 277V, <250 Watts (VA), A Can

- Precision-wound coils, ensuring even heat dissipation and the highest electrical integrity.
- Non-Isolated Autotransformer designed specifically for lighting applications to step down 480V to 277V
- For use with one or more electronic 277V or universal voltage ballasts within max total system power of autotransformer
- 480Vrms Input, 60Hz Only, 277Vrms Full Load Output or 347Vrms Input
- For loads with total system power <250VA
- Internal Auto Reset Thermal Protector Rated 100C
- For use on single phase or ground referred systems
- Five Year Limited Warranty
- 93% electrical efficiency

General characteristics

Ballast Type	Magnetic - Core & Coil
Case Temperature (MAX)	100°C (212°F)
Sound Rating	A (20-24 decibels)
Enclosure Type	Metal
Additional Info	Thermally protected

Electrical characteristics

Supply Current Frequency	60 Hz
Supply Current Frequency (MIN)	60 Hz

Order information

10 Pack	Pallet Pack	DIY Pack	IP Pack
74119			

Specifications by lamp and wattage

Line Volts
480V to 277V
347V to 200V

Dimensions

Wiring diagram – TR1 – see example on page 13-18	
Case dimensions – Ref Drawing -A Can – see page 13-19	
Length (L)	9.5 in (241 mm)
Width (W)	1.7 in (43 mm)
Height (H)	1.18 in (30 mm)
Mounting dimensions	
Mount Length (M)	8.9 in (226 mm)
Mount Width (X or F)	1.18 in (30 mm)
Mount Slots (MS)	0.3 in (8 mm)
Exit Type	Side
Remote Mounting Wire Gauge	14 AWG
Lead lengths	**Length (± 1 in.)**
Black	14.0 in (356 mm)
Blue	14.0 in (356 mm)
Red	14.0 in (356 mm)

Safety and performance UL Type 1 Outdoor UL Listed UL Listed Autotransformer cUL

74120 – GETR480/277-375W

Step Down Transformers

Non-Isolated Autotransformer 480 to 277V, <375 Watts (VA), F Can

- Precision-wound coils, ensuring even heat dissipation and the highest electrical integrity.
- Non-Isolated Autotransformer designed specifically for lighting applications to step down 480V to 277V
- For use with one or more electronic 277V or universal voltage ballasts within max total system power of autotransformer
- 480Vrms Input, 60Hz Only, 277Vrms Full Load Output or 347Vrms Input
- For loads with total system power <375VA
- Internal Auto Reset Thermal Protector Rated 100C
- For use on single phase or ground referred systems
- Five Year Limited Warranty
- 93% electrical efficiency

General characteristics

Ballast Type	Magnetic - Core & Coil
Case Temperature (MAX)	100°C (212°F)
Sound Rating	A (20-24 decibels)
Enclosure Type	Metal
Additional Info	Thermally protected

Electrical characteristics

Supply Current Frequency	60 Hz
Supply Current Frequency (MIN)	60 Hz

Order information

10 Pack	Pallet Pack	DIY Pack	IP Pack
74120			

Specifications by lamp and wattage

Line Volts
480V to 277V
347V to 200V

Dimensions

Wiring diagram – TR1 – see example on page 13-18	
Case dimensions – Ref Drawing -F Can – see page 13-19	
Length (L)	11.75 in (299 mm)
Width (W)	1.7 in (43 mm)
Height (H	1.18 in (30 mm)
Mounting dimensions	
Mount Length (M)	11.1 in (283 mm)
Mount Slots (MS)	0.3 in (8 mm)
Exit Type	Side
Remote Mounting Wire Gauge	14 AWG
Lead lengths	**Length (± 1 in.)**
Black	14.0 in (356 mm)
Blue	14.0 in (356 mm)
Red	14.0 in (356 mm)

Safety and performance UL Type 1 Outdoor UL Listed cUL

See page E-1 for warranty information.

*T5 lamp lengths are noted to nearest foot and are not exact lengths as noted in feet. See GE Lamp Catalog for exact lamp length.

85857 - GETR277/120-175W

Step Down Transformers

Non-Isolated Autotransformer 277 to 120V, <175 Watts (VA), A Can

- Precision-wound coils, ensuring even heat dissipation and the highest electrical integrity.
- Non-Isolated Autotransformer designed specifically for lighting applications to step down 277V to 120V.
- For use with one or more electronic 120V or universal voltage ballasts within max total system power of autotransformer.
- 277Vrms Input, 60Hz Only, 120Vrms Full Load Output
- For loads with total system power <175VA
- Internal Auto Reset Thermal Protector Rated 100°C
- For use on single phase
- Five Year Limited Warranty
- 93% electrical efficiency

General characteristics

Ballast Type	Magnetic - Core & Coil
Case Temperature (MAX)	100°C (212°F)
Sound Rating	A (20-24 decibels)
Enclosure Type	Metal
Additional Info	Thermally protected

Electrical characteristics

Supply Current Frequency	60 Hz
Supply Current Frequency (MIN)	60 Hz

Order information

6 Pack	Pallet Pack	DIY Pack	IP Pack
85857			

Specifications by lamp and wattage

Lamp	# of Lamps	Line Volts
F54T5/HO	1	277
F32T8	1	277

Dimensions

Wiring diagram – TR1 – see example on page 13-18	
Case dimensions – Ref Drawing -A Can – see page 13-19	
Length (L)	9.5 in (241 mm)
Width (W)	1.7 in (43 mm)
Height (H)	1.2 in (30.5 mm)
Mounting dimensions	
Mount Length (M)	8.9 in (226 mm)
Mount Width (X or F)	1.1 in (29 mm)
Mount Slots (MS)	0.3 in (8 mm)
Exit Type	Side
Remote Mounting Wire Gauge	14 AWG
Lead lengths	**Length (± 1 in.)**
Black	14.0 in (356 mm)
Blue	14.0 in (356 mm)
Red	14.0 in (356 mm)

Safety and performance UL Environmental Type 1 Enclosure UL Listed UL Listed Autotransformer

90896 - GETR347/277-375W

Step Down Transformers

Non-Isolated Autotransformer 347 to 277V, <375 Watts (VA), F Can

- Precision-wound coils, ensuring even heat dissipation and the highest electrical integrity.
- Non-Isolated Autotransformer designed specifically for lighting applications to step down 347V to 277V.
- For use with one or more electronic 277V or universal voltage ballasts within max total system power of autotransformer.
- 347Vrms Input, 60Hz Only, 277Vrms Full Load Output
- For loads with total system power <375VA
- Internal Auto Reset Thermal Protector Rated 100°C
- For use on single phase
- Five Year Limited Warranty
- 93% electrical efficiency

General characteristics

Ballast Type	Magnetic - Core & Coil
Case Temperature (MAX)	100°C (212°F)
Sound Rating	A (20-24 decibels)
Enclosure Type	Metal
Additional Info	Thermally protected

Electrical characteristics

Supply Current Frequency	60 Hz
Supply Current Frequency (MIN)	60 Hz

Order information

6 Pack	Pallet Pack	DIY Pack	IP Pack
90896			

Specifications by lamp and wattage

Lamp	# of Lamps	Line Volts
F54T5/HO	1	347
F32T8	1	347

Dimensions

Wiring diagram – TR1 – see example on page 13-18	
Case dimensions – Ref Drawing -F Can – see page 13-19	
Length (L)	11.8 in (298.5 mm)
Width (W)	1.7 in (43 mm)
Height (H)	1.2 in (30.5 mm)
Mounting dimensions	
Mount Length (M)	11.1 in (283 mm)
Mount Width (X or F)	
Mount Slots (MS)	0.2 in (6 mm)
Exit Type	Side
Remote Mounting Wire Gauge	14 AWG
Lead lengths	**Length (± 1 in.)**
Black	14.0 in (356 mm)
Blue	14.0 in (356 mm)
Red	14.0 in (356 mm)

Safety and performance UL Environmental Type 1 Enclosure UL Listed UL Listed Autotransformer

Wiring Diagrams
T5 Electronic Programmed Start Ballasts

LFL 4a

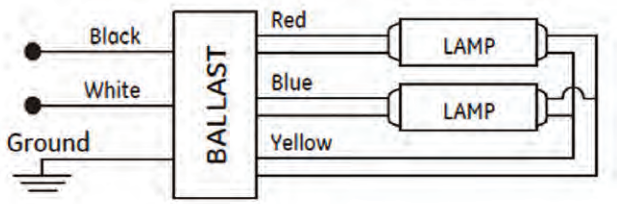

LFL 4b

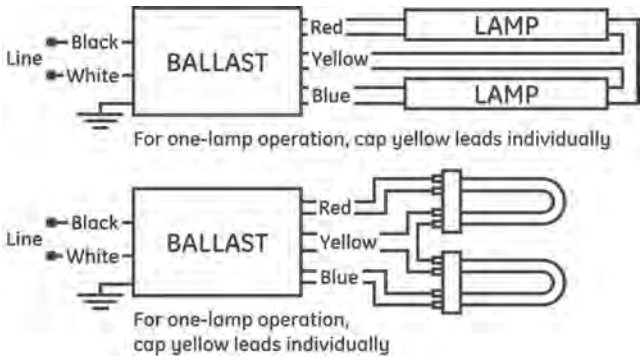

LFL 4c

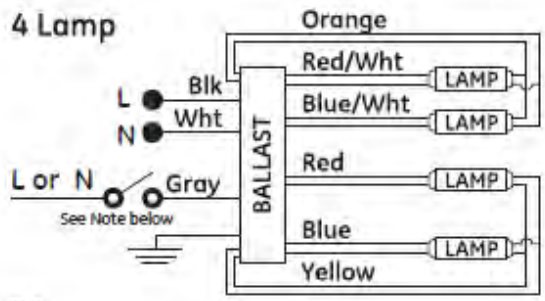

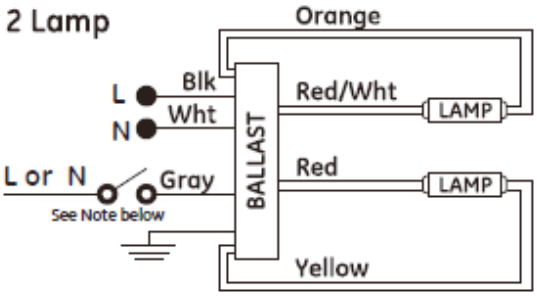

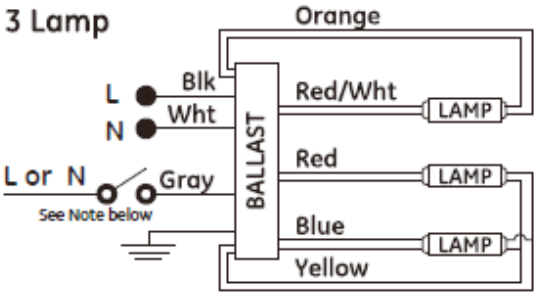

T51

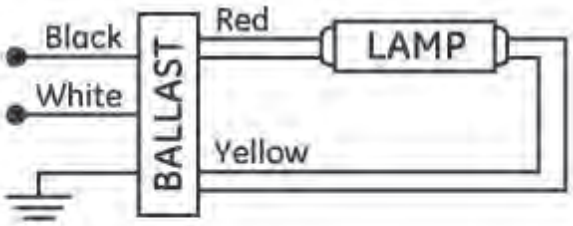

For one lamp operation cap the blue leads individually

Note:
Connect gray wire to line or neutral for full output with all lamps on. Leave gray wire open for dimmed output, only lamps connected to Red-White and Blue-White will be operated. Use dry contact switch or relay for high/low control.

*T5 lamp lengths are noted to nearest foot and are not exact lengths as noted in feet. See GE Lamp Catalog for exact lamp length.

LFL PS1b

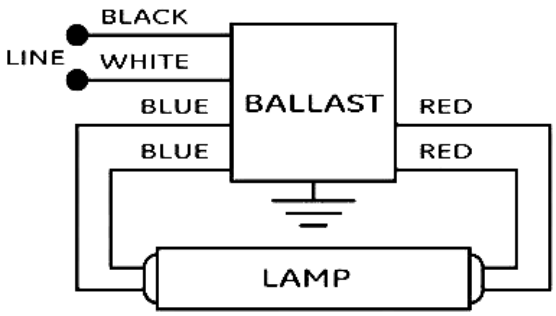

TR1

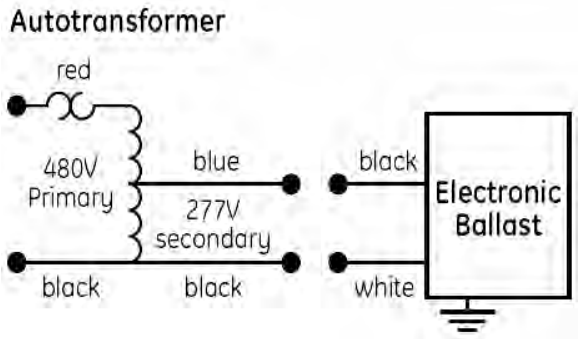

Grounded 277V, 347V or 480V systems only

LFL PS4

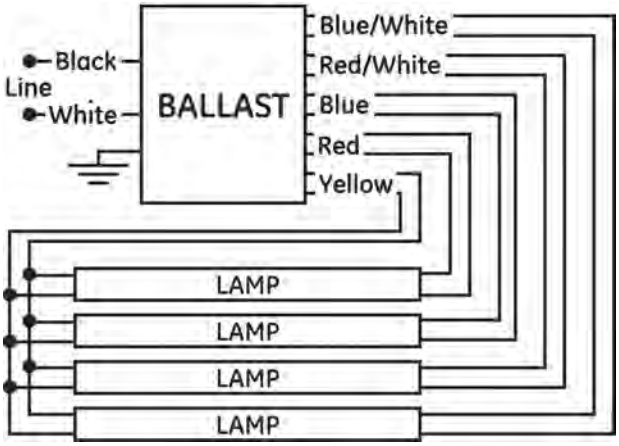

LFL 2a

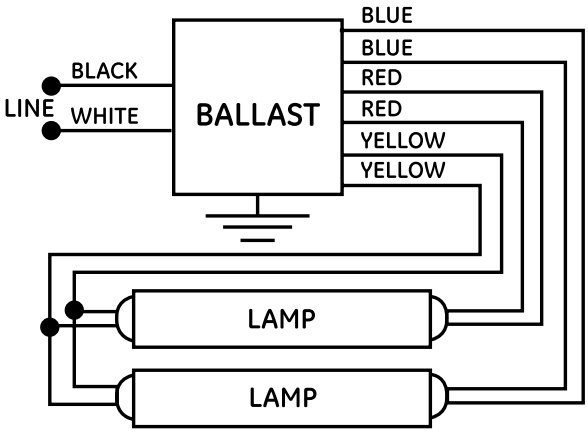

LFL 1a

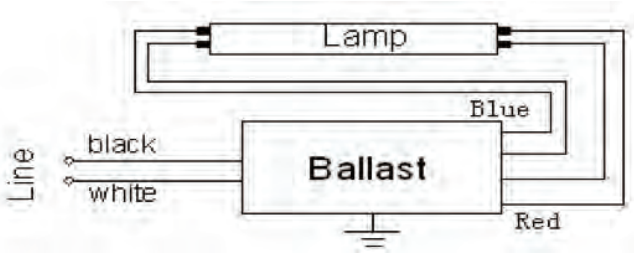

LFL 1b

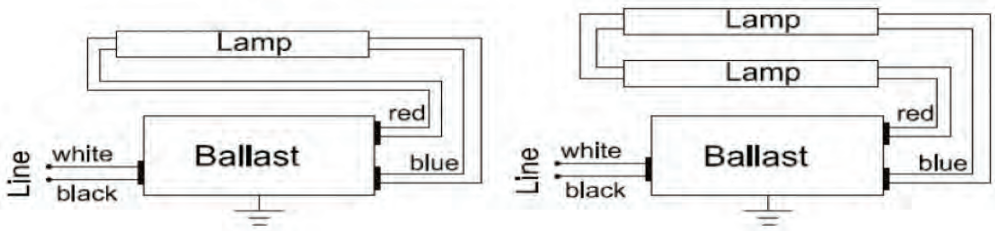

See page E-1 for warranty information.

Case Dimensions
T5 Electronic Programmed Start Ballasts

-A Can, -E, -F, -G

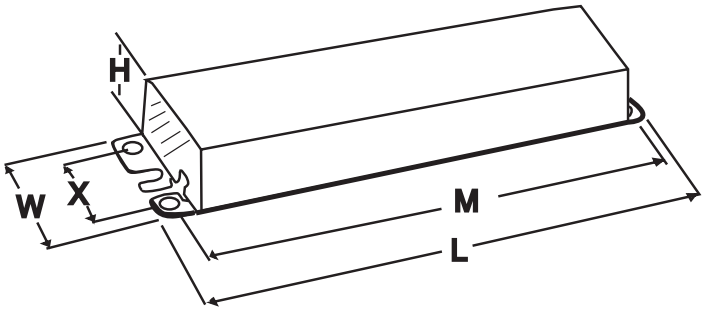

-C Can

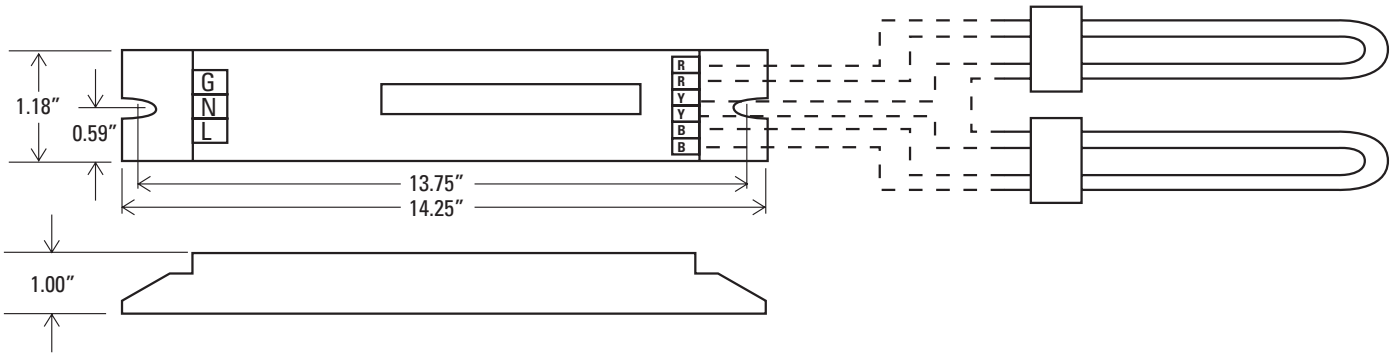

-D Can

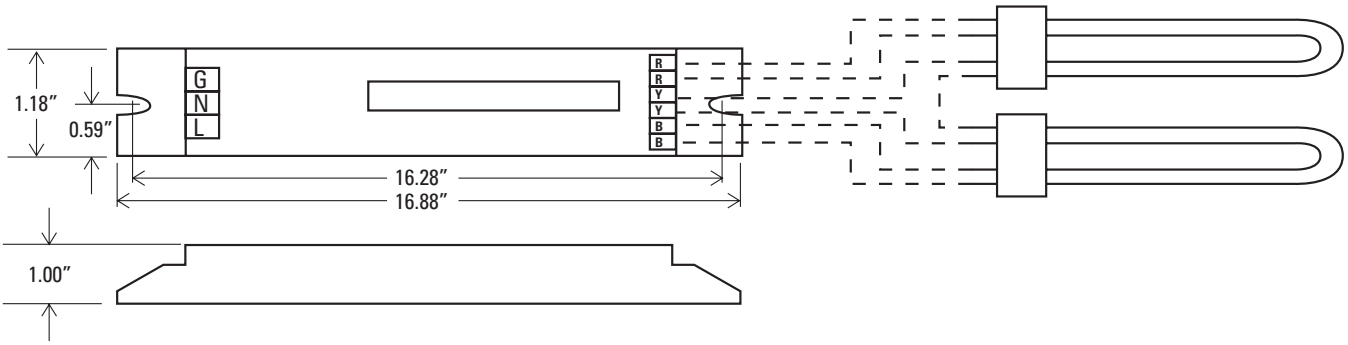

-J

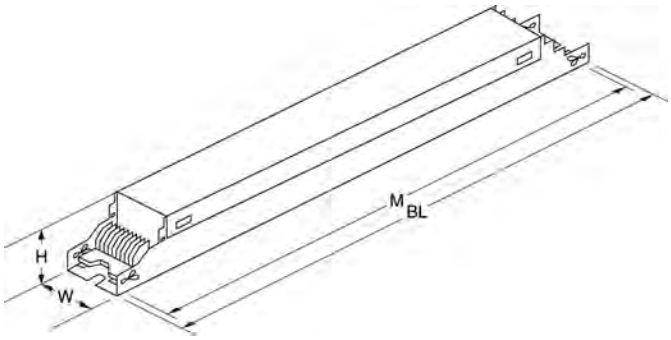

See page E-1 for warranty information.

*T5 lamp lengths are noted to nearest foot and are not exact lengths as noted in feet. See GE Lamp Catalog for exact lamp length.

Notes

See page E-1 for warranty information.

Table of Contents
T12 Electronic and High Output Ballasts

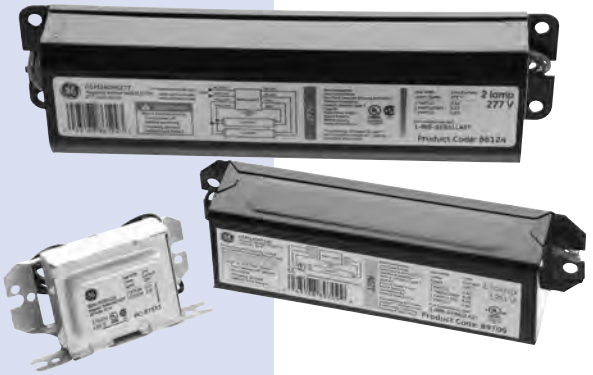

Understanding T12 Electronic Ballasts

Electronic T12

GE multivolt and dedicated voltage ProLine® T12 high-performance ballasts are designed for replacement of magnetic T12 electronic ballasts during maintenance or retrofits. GE multivolt ProLine® T12 ballasts have the same wiring and mounting requirements as standard magnetic ballasts and provide up to 20% energy savings by simply replacing the ballast.

The DOE ballast ruling effective April 1, 2005, prevents the sale of 4 foot and 8 foot lamp electromagnetic ballasts that operate T12 lamps and do not meet federal ballast efficiency requirements. GE ProLine® T12 electronic ballasts meet the DOE minimum ballast efficiency requirements and also allow facility managers to reduce ballast maintenance inventories by consolidating the number of ballasts needed. GE ProLine® T12 ballasts operate both energy-saving and standard wattage lamps and are also multi-voltage (120-277V). With 2 ballasts, the multi-voltage ProLine® T12 can consolidate over 40 different magnetic ballasts.

Performance Features

- GE240RSMVN and GE240RS120 comply with FCC for residential use
- Low-profile and lightweight housing simplifies installation and reduces transportation costs (GE240 = 1.3 lbs. lighter than magnetic; GE260 = 5.3 lbs. lighter than magnetic)
- Parallel operation — if one lamp fails, others remain lit
- Significantly quieter than magnetic
- High-frequency operation virtually eliminates lamp flickering typical in T12 electromagnetic systems
- Five-year limited ballast warranty

Electromagnetic T12

- Complete line of ballasts for 2-to-8 foot lamps, circleline and high-output lamps
- 100% thermally protected
- High-grade lamination steel assures lowest wattage loss
- UL, CSA and/or cUL approved
- 888-GEBALLAST on every ballast
- Two-year limited ballast warranty

Color-Coded Ballast and Outer Box Labels

120V – Yellow
277V – Red

Packaging

- Standard 10 packs
- IP Packs – individually packed with instructions
- DIY – shrink-wrapped and tray-packed with instructions

GE Ballast LFL magnetic nomenclature

G E M - 2 3 2 - H O - R S - 1 2 0 - D I Y

GE Ballast
M = Electromagnetic Ballast
GEH = HID

Maximum number of lamps supported by this ballast: 1, 2, 3, 4

Lamp Watts
(Primary Lamp)
T8 = 32 – 4 foot, 59 – 8 foot
T12 = 40 – 4 foot, 60 – 8 foot
T12 Electronic =
40 – 2-4 foot, 2 pin
60 – 4-8 foot, 1 pin
96 – 4-8 foot HO, 2 pin
T12 Magnetic =
40 – 2-4 foot, 2 pin
96 – 4-8 foot, 2 pin

IS = Instant Start, default if not shown
RS = Rapid Start
PH = Preheat
PT= Preheat/Trigger
H = Hybrid
D50 = Dimming (min level)

HO = High Output
VHO = Very High Output

120V – Yellow
277V – Red
220V – Green
240V – Orange
347 – Gray

Pack Type
IP = Individual corrugated box per ballast
84T = Pallet bulk pack (84=840, 42=420 ballasts)
DIY = Shrinkwrap ballast in tray pack
DIY72 = Shrinkwrap ballast in pallet pack (Qty)
No extension = 10 pack

See page E-1 for warranty information.

ProLine® T12

T12 Electronic and High Output Ballasts For F20 (2 ft), F30 (3 ft), F34/F40 (4 ft) T12 Lamps

74472 – GE240PS-MV-N (replaces 24107)

ProLine® T12 Multivolt 120V – 277V

2 or 1 – F40 or F34T12 Rapid Start 120 to 277 "N" BF ProLine® T12

- High-performance electronic ballast for all general fluorescent applications
- Multi-voltage technology handles voltage from 120 to 277V
- Light weight, low-profile housing
- Parallel lamp operation means system maintenance is easier to manage

General characteristics

Ballast Type	Electronic – Programmed/ Rapid Start
Starting Method	Rapid start
Lamp Wiring	Parallel
Line Voltage Regulation (+/-)	10%
Ambient Temperature (MAX)	
Case Temperature (MAX)	70°C (158°F)
Ballast Factor	Normal
Power Factor Correction	Active
Sound Rating	A (20-24 decibels)
Enclosure Type	Metal
Additional Info	Auto-restart, Thermally protected

Electrical characteristics

Supply Current Frequency	60 Hz

Order information

Std. pack	Pallet Pack	DIY Pack	IP Pack
74472		74473 (replaces 24773)	

Dimensions

Wiring diagram – LFL PS2 – see example on page 14-6	
Case dimensions – Ref Drawing B1 – see page 14-7	
Length (L)	9.5 in (241 mm)
Width (W)	1.3 in (33 mm)
Height (H)	1.2 in (30 mm)
Mounting dimensions	
Mount Length (M)	8.9 in (226 mm)
Mount Width (X or F)	1.1 in (28 mm)
Mount Slots (MS)	0.3 in (8 mm)
Weight	1.06 lbs
Exit Type	Side
Remote mounting distance to lamp	18 ft
Remote Mounting Wire Gauge	18 AWG
Lead lengths	**Length (± 1 in.)**
Yellow	48.0 in (1219 mm)
Blue	33.0 in (838 mm)
Red	33.0 in (838 mm)
Black	25.0 in (635 mm)
White	25.0 in (635 mm)

Specifications by lamp and wattage

Lamp	# of Lamps	Line Volts	System Watts	Nom. Line Current	System Ballast Factor	Ballast Efficacy Factor	Power Factor% (>=)	Crest Factor (<=)	THD% (<=)	Min. Starting Temp (°F/°C)
	2	120	74	0.67 A	0.89	1.20	99	1.7	6	50/10
	2	277	73	0.30 A	0.89	1.22	97	1.7	10	50/10
	1	120	48	0.41 A			99	1.7	7	50/10
F40T12	1	277	48	0.19 A			95	1.7	10	50/10
	2	120	75	0.63 A	0.88	1.17	99	1.7	7	50/10
	2	277	72	0.27 A	0.88	1.22	94	1.7	16	50/10
	1	120	42	0.35 A			99	1.7	10	50/10
F40T10	1	277	42	0.17 A			88	1.7	16	50/10
	2	120	63	0.56 A	0.87	1.38	99	1.7	7	50/10
	2	277	62	0.26 A	0.87	1.40	96	1.7	10	50/10
	1	120	41	0.35 A			99	1.7	8	50/10
F34T12	1	277	41	0.17 A			94	1.7	11	50/10
	2	120	50	0.42 A	0.95	1.90	99	1.7	9	50/10
	2	277	50	0.20 A	0.95	1.90	91	1.7	18	50/10
	1	120	30	0.26 A			99	1.7	12	50/10
F30T12/WM	1	277	30	0.13 A			82	1.7	27	50/10
	2	120	60	0.31 A	0.95	1.58	99	1.7	7	50/10
	2	277	58	0.22 A	0.95	1.64	96	1.7	10	50/10
	1	120	37	0.31 A			99	1.7	8	50/10
F30T12	1	277	37	0.16 A			94	1.7	11	50/10
	2	120	46	0.39 A	1.00	2.17	99	1.7	8	50/10
	2	277	45	0.18 A	1.00	2.22	94	1.7	11	50/10
	1	120	28	0.24 A			99	1.7	9	50/10
F20T12	1	277	29	0.13 A			92	1.7	17	50/10

Safety and performance

UL Type 1 Outdoor UL Type HL UL Class P NRCan FCC Part 18 Class B at 120 volts cUL Listed UL Listed

Product is compliant with material restriction requirements of RoHS

74474 – GE-260IS-MV-N (replaces 24108)

ProLine® T12 Multivolt 120V – 277V

2 or 1 – F96T12 Instant Start 120 to 277

- High-performance electronic ballasts for all general fluorescent applications
- Instant start electronic ballast for long lamp starting cycles and low initial cost
- Multi-voltage technology handles voltage from 120 to 277V
- Lightweight, low-profile housing
- Parallel lamp operation means system maintenance is easier to manage

General characteristics

Ballast Type	Electronic - Multivolt Instant Start
Starting Method	Instant start
Lamp Wiring	Parallel
Line Voltage Regulation (+/-)	10 %
Ambient Temperature (MAX)	
Case Temperature (MAX)	70 °C (158 °F)
Ballast Factor	Normal
Power Factor Correction	Active
Sound Rating	A (20-24 decibels)
Enclosure Type	Metal
Additional Info	Auto-restart, Thermally protected

Electrical characteristics

Supply Current Frequency	50Hz/60 Hz

Order information

10 Pack	Pallet Pack	DIY Pack	IP Pack
74474		74475 (replaces 24776)	

Dimensions

Wiring diagram – LFL 14 – see example on page 14-6	
Case dimensions – Ref Drawing B1 – see page 14-7	
Length (L)	9.5 in (241 mm)
Width (W)	1.7 in (43 mm)
Height (H)	1.2 in (30 mm)
Mounting dimensions	
Mount Length (M)	8.9 in (226 mm)
Mount Width (X or F)	1.1 in (29 mm)
Mount Slots (MS)	0.3 in (8 mm)
Weight	2.40 lbs
Exit Type	Side
Remote Mounting Distance to Lamp	18 ft
Remote Mounting Wire Gauge	18 AWG
Lead lengths	**Length (± 1 in.)**
Black	25.0 in (635 mm)
White	25.0 in (635 mm)
Red	59.0 in (1499 mm)
Blue	67.0 in (1702 mm)

Specifications by lamp and wattage

Lamp	# of Lamps	Line Volts	System Watts	Nom. Line Current	System Ballast Factor	Ballast Efficacy Factor	Power Factor % (>=)	Crest Factor (<=)	THD% (<=)	Min. Starting Temp (°F/°C)
	2	120	107	0.94 A	0.88	0.82	99	1.7	8	60/16
	2	277	106	0.40 A	0.88	0.83	96	1.7	10	60/16
	1	120	68	0.60 A	1.00	1.47	99	1.7	10	60/16
F96T12/WMP	1	277	68	0.27 A	1.00	1.47	95	1.7	12	60/16
	2	120	112	0.98 A	0.90	0.80	99	1.7	8	60/16
	2	277	110	0.42 A	0.90	0.82	97	1.7	10	60/16
	1	120	72	0.63 A	1.00	1.39	99	1.7	10	60/16
F96T12/WM	1	277	71	0.28 A	1.00	1.41	95	1.7	12	60/16
	2	120	141	1.24 A	0.90	0.64	99	1.7	8	0/-18
	2	277	138	0.53 A	0.90	0.65	98	1.7	10	0/-18
	1	120	90	0.79 A	1.02	1.13	99	1.7	10	0/-18
F96T12	1	277	89	0.34 A	1.02	1.15	96	1.7	12	0/-18
	2	120	125	1.10 A	0.90	0.72	99	1.7	8	0/-18
	2	277	123	0.47 A	0.90	0.73	97	1.7	10	0/-18
	1	120	80	0.70 A	1.04	1.30	99	1.7	10	0/-18
F84T12	1	277	79	0.30 A	1.04	1.32	96	1.7	12	0/-18
	2	120	107	0.94 A	0.90	0.84	99	1.7	8	0/-18
	2	277	106	0.40 A	0.90	0.85	97	1.7	10	0/-18
	1	120	69	0.60 A	1.04	1.51	99	1.7	10	0/-18
F72T12	1	277	69	0.27 A	1.04	1.51	95	1.7	12	0/-18
	2	120	97	0.86 A	0.90	0.93	99	1.7	8	0/-18
	2	277	96	0.37 A	0.90	0.94	97	1.7	10	0/-18
	1	120	63	0.55 A	1.08	1.71	99	1.7	10	0/-18
F64T12	1	277	63	0.25 A	1.08	1.71	95	1.7	12	0/-18
	2	120	92	0.81 A	0.90	0.98	99	1.7	8	0/-18
	2	277	91	0.35 A	0.90	0.99	96	1.7	10	0/-18
	1	120	60	0.53 A	1.08	1.80	99	1.7	10	0/-18
F60T12	1	277	60	0.28 A	1.08	1.80	94	1.7	12	0/-18
	2	120	73	0.65 A	0.90	1.23	99	1.7	8	0/-18
	2	277	73	0.29 A	0.90	1.23	95	1.7	10	0/-18
	1	120	49	0.43 A	1.10	2.24	99	1.7	10	0/-18
F48T12	1	277	48	0.20 A	1.10	2.29	89	1.7	12	0/-18

Safety and performance

UL Type 1 Outdoor NRCan UL Type HL FCC – CLASS A Non-Consumer UL Class P cUL Listed UL Listed

Product is compliant with material restriction requirements of RoHS

See page E-1 for warranty information.

T12 High Output
T12 Electronic and High Output Ballasts

35727 – GE296HO-MVPS-N

T12 High Output ProLine® T12 Multivolt 120V – 277V

2 or 1 – F96T12 HO RS 120 to 277 Multivolt ProLine®

General characteristics

Ballast Type	Electronic – Programmed/ Rapid Start
Starting Method	Rapid start
Lamp Wiring	Series
Line Voltage Regulation (+/-)	10%
Ambient Temperature (MAX)	105°F (41°C)
Case Temperature (MAX)	75°C (167°F)
Ballast Factor	Normal
Power Factor Correction	Active
Sound Rating	A (20-24 decibels)
Additional Info	Auto-restart, Thermally protected

Electrical characteristics

Supply Current Frequency	50 Hz/60 Hz

Order information

Std. pack	Pallet Pack	DIY Pack	IP Pack
35727		72109	

Dimensions

Wiring diagram – LFL PS2 – see example on page 14-6	
Case dimensions – Ref Drawing SL – see page 14-7	
Length (L)	11.75 in (299 mm)
Width (W)	2.15 in (55 mm)
Height (H)	1.61 in (41 mm)
Mounting dimensions	
Mount Length (M)	11.0 in (279 mm)
Mount Width (X or F)	2.15 in (55 mm)
Mount Slots (MS)	
Weight	
Exit Type	Side
Remote Mounting Distance to Lamp*	
Remote Mounting Wire Gauge	

* See gelighting.com for wire lengths. Different for 10 pg vs. DIY pack.

Specifications by lamp and wattage

Lamp	# of Lamps	Line Volts	System Watts	Nom. Line Current	System Ballast Factor	Ballast Efficacy Factor	Power Factor % (>=)	Crest Factor (<=)	THD% (<=)	Min. Starting Temp (°F/°C)
F96T12/HO/	2	120	164	1.38 A	0.90	0.55	99	1.7	10	60/16
WM	2	277	164	0.62 A	0.90	0.55	99	1.7	10	60/16
	2	120	196	1.65 A	0.90	0.46	99	1.7	10	-20/-29
	2	277	196	0.73 A	0.90	0.46	97	1.7	10	-20/-29
	1	120	104	0.88 A	0.92	0.88	99	1.7	15	-20/-29
F96T12/HO	1	277	104	0.42 A	0.92	0.88	95	1.7	15	-20/-29
	2	120	154	1.30 A	0.90	0.58	99	1.7	10	-20/-29
F72T12/HO	2	277	154	0.57 A	0.90	0.58	96	1.7	10	-20/-29
	2	120	120	1.17 A	0.90	0.75	99	1.7	10	-20/-29
F70T8	2	277	119	0.52 A	0.90	0.76	97	1.7	10	-20/-29
	2	120	132	0.50 A	0.90	0.68	96	1.7	10	-20/-29
F60T12/HO	2	277	132	0.50 A	0.90	0.68	96	1.7	10	-20/-29
	2	120	112	0.95 A	0.90	0.80	99	1.7	15	-20/-29
F48T12/HO	2	277	113	0.43 A	0.90	0.80	95	1.7	15	-20/-29

Safety and performance

cUL Listed UL Listed FCC Part 18 (Class A) Non Consumer

LFL PS2

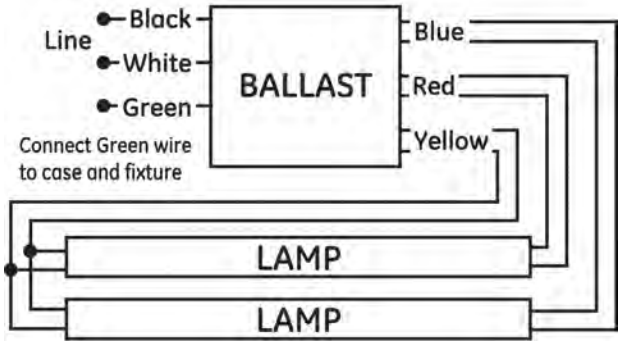

LFL PS3

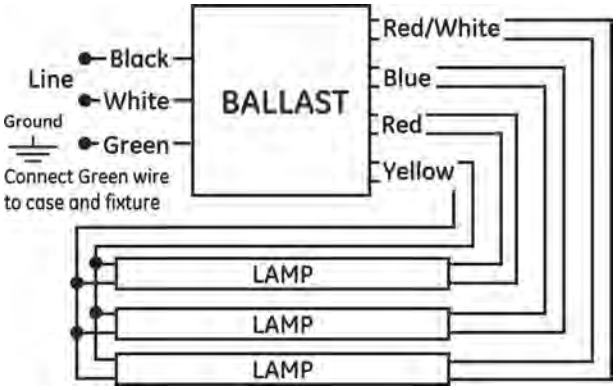

LFL 14

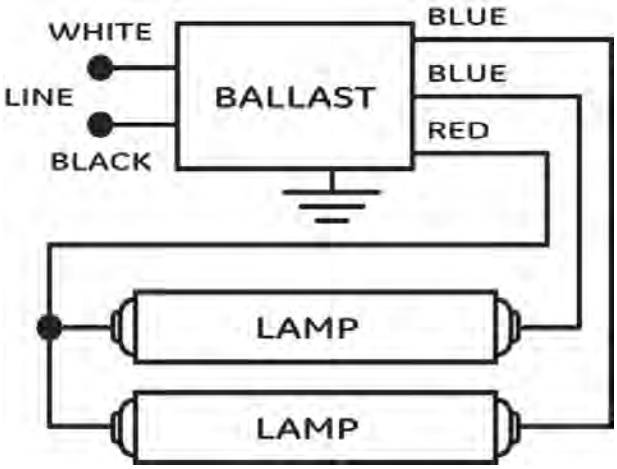

LFL 2

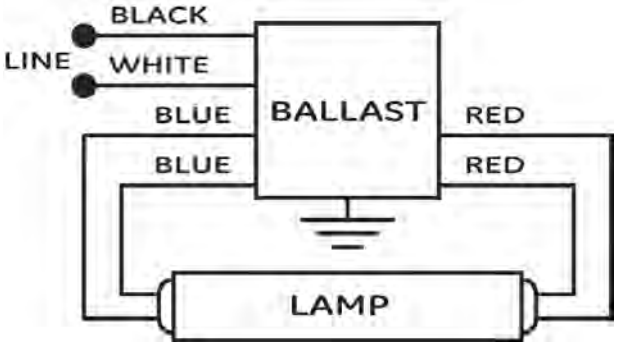

See page E-1 for warranty information.

Case Dimensions
T12 Electronic and High Output Ballasts

ST

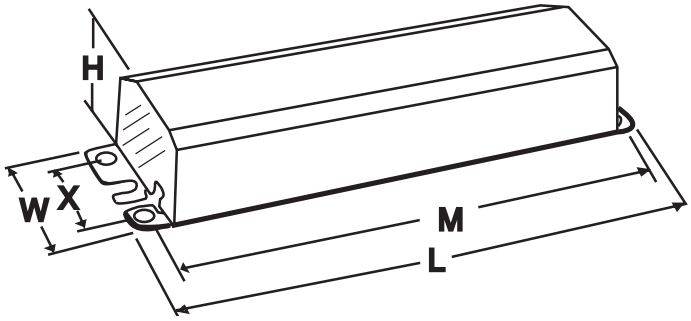

B1

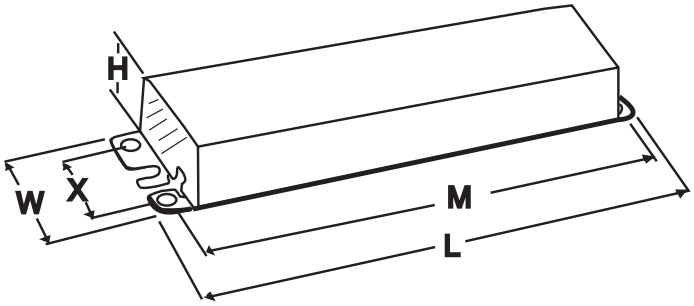

D10, 15, 29

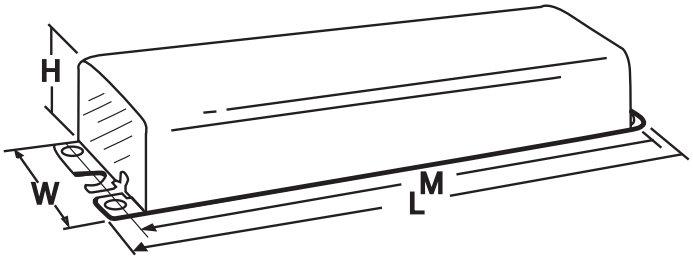

SL

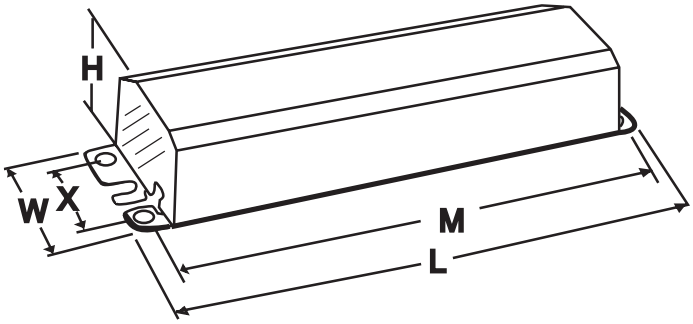

See page E-1 for warranty information.

Notes

See page E-1 for warranty information.

Table of Contents
Magnetic Ballasts

68186 – GEM120PH120DIY

Magnetic Ballasts

1 – F20T12, F15T8, F1512, F14T8, F18T8, 120V, Magnetic Ballast (200H2)

- Magnetic ballast construction for all general fluorescent lighting
- Extends lamp life in frequently switched applications
- Color-coded ballast and package labels reduce misapplication errors (120V Yellow, 277V Red)

Ballast Type	Magnetic – Rapid Start
Starting Method	Preheat
Lamp Wiring	Series
Line Voltage Regulation (+/-)	5%
Ambient Temperature (MAX)	105°F (41°C)
Case Temperature (MAX)	90°C (194°F)
Ballast Factor	Normal
Power Factor Correction	
Sound Rating	A (20-24 decibels)
Additional Info	

Electrical characteristics

Supply Current Frequency	60 Hz

Order information

Std. pack	Pallet Pack	DIY Pack	IP Pack
		68186	

Wiring diagram – LFL 21 – see example on page 15-7	
Case dimensions – Ref Drawing 2 – see page 15-8	
Length (L)	3.06 in (78 mm)
Width (W)	1.81 in (46 mm)
Height (H)	1.5 in (38 mm)
Mounting dimensions	
Bracket Length (BL)	3.0 in (77 mm)
Mount Length (M)	2.75 in (70 mm)
Mount Width (X or F)	
Mount Slots (MS)	0.2 in (6 mm)
Weight	0.66 lbs
Exit Type	Side
Remote Mounting Distance to Lamp	10 ft
Remote Mounting Wire Gauge	18 AWG
Lead lengths	**Length (± 1 in)**
Black	12 in (305 mm)

Specifications by lamp and wattage

Lamp	# of Lamps	Line Volts	System Watts	Nom. Line Current	System Ballast Factor	Ballast Efficacy Factor	Power Factor % (>=)	Crest Factor (<=)	THD (<=)	Min. Starting Temp (°F/°C)
F15T12	1	120	17	0.29 A	0.84	5.1	47	1.6	15	50 / 10
F15T8	1	120	16.5	0.28 A	0.89	5.3	47	1.6	15	50 / 10
F20T12	1	120	17	0.25 A	0.70	4.0	55	1.6	15	50 / 10

Safety and performance

UL Type 1 Outdoor UL Type HL C UL US UL Class P

68187 – GEM120TC120DIY

Magnetic Ballasts

1 – F20T12, F15T8, F15T12, F14T12, 120V, Magnetic Ballast (546BTCP)

- Magnetic ballast construction for all general fluorescent lighting
- Extends lamp life in frequently switched applications
- Color-coded ballast and package labels reduce misapplication errors (120V Yellow, 277V Red)

General characteristics

Ballast Type	Magnetic – Rapid Start
Starting Method	Preheat
Lamp Wiring	Series
Line Voltage Regulation (+/-)	5%
Ambient Temperature (MAX)	105°F (41°C)
Case Temperature (MAX)	90°C (194°F)
Ballast Factor	Normal
Power Factor Correction	
Sound Rating	A (20-24 decibels)
Additional Info	Auto-restart, Thermally protected

Electrical characteristics

Supply Current Frequency	60 Hz

Order information

Std. pack	Pallet Pack	DIY Pack	IP Pack
		68187	

Dimensions

Wiring diagram – LFL 22 – see example on page 15-7	
Case dimensions – Ref Drawing 9 – see page 15-8	
Length (L)	6.5 in (165 mm)
Width (W)	1.75 in (44 mm)
Height (H)	1.38 in (35 mm)
Mounting dimensions	
Bracket Length (BL)	6.4 in (164 mm)
Mount Length (M)	6.0 in (152 mm)
Mount Width (X or F)	
Mount Slots (MS)	0.25 in (6 mm)
Weight	2.10 lbs
Exit Type	Side
Remote Mounting Distance to Lamp	10 ft
Remote Mounting Wire Gauge	18 AWG
Lead lengths	**Length (± 1 in)**
Black	20 in (508 mm)
Blue	15 in (381 mm)
Red	15 in (381 mm)

Specifications by lamp and wattage

Lamp	# of Lamps	Line Volts	System Watts	Nom. Line Current	System Ballast Factor	Ballast Efficacy Factor	Power Factor % (>=)	Crest Factor (<=)	THD (<=)	Min. Starting Temp (°F/°C)
F20T12	1	120	18.6	0.31	0.76	2.0	0.51	1.7	30	50 / 10
F15T8	1	120	18.3	0.32	0.93	2.6	0.48	1.7	30	50 / 10
F14T12	1	120	18.1	0.32	0.94	2.6	0.47	1.7	30	50 / 10
F15T12	1	120	18.2	0.31	0.91	2.6	0.49	1.7	30	50 / 10

Safety and performance

UL Type 1 Outdoor UL Type HL UL Class P C UL US

See page E-1 for warranty information.

Magnetic Ballasts
For Two Circleline T9 Preheat Lamps

68190 – GEM1FC16T9RS120

Magnetic Ballasts

2 – FC12T9, FC16T9, FC8T9, FC12T9, 120V, Magnetic (726VLHWSTCP)

- Magnetic ballast construction for all general fluorescent lighting
- Extends lamp life in frequently switched applications
- Color-coded ballast and package labels reduce misapplication errors (120V Yellow, 277V Red)

General characteristics

Ballast Type	Magnetic – Rapid Start
Starting Method	Preheat
Lamp Wiring	Series
Line Voltage Regulation (+/-)	5%
Ambient Temperature (MAX)	105°F (41°C)
Case Temperature (MAX)	90°C (194°F)
Ballast Factor	Normal
Power Factor Correction	
Sound Rating	A (20-24 decibels)
Additional Info	Auto-restart, Thermally protected

Electrical characteristics

Supply Current Frequency	60 Hz

Order information

Std. pack	Pallet Pack	DIY Pack	IP Pack
		68190	

Dimensions

Wiring diagram – LFL 037 – see example on page 15-7	
Case dimensions – Ref Drawing 9 – see page 15-8	
Length (L)	6.5 in (167 mm)
Width (W)	1.75 in (44 mm)
Height (H)	1.38 in (35 mm)
Mounting dimensions	
Bracket Length (BL)	6.5 in (167 mm)
Mount Length (M)	6.0 in (152 mm)
Mount Width (X or F)	
Mount Slots (MS)	0.3 in (8 mm)
Weight	1.60 lbs
Exit Type	Side
Remote Mounting Distance to Lamp	10 ft
Remote Mounting Wire Gauge	18 AWG
Lead lengths	**Length (± 1 in)**
White	15 in (381 mm)
Black	15 in (381 mm)
Red, Blue, Yellow	11 in (280 mm)

Specifications by lamp and wattage

Lamp	# of Lamps	Line Volts	System Watts	Nom. Line Current	System Ballast Factor	Ballast Efficacy Factor	Power Factor % (>=)	Crest Factor (<=)	THD (<=)	Min. Starting Temp (°F/°C)
FC16T9/FC12T9	2	120	53	0.60 A	1.70	2.30	75	1.7	30	50 / 10
FC8T9/FC12T9	2	120	43	0.60 A	1.70	2.30	60	1.7	30	50 / 10

Safety and performance

UL Type 1 Outdoor UL Type HL UL Class P C UL US

See page E-1 for warranty information.

Magnetic Ballasts
For One Circleline T9 Preheat Lamp

68193 – GEM1FC8T9RS120IP

Magnetic Ballasts

1 – FC8T9, FC6T9, RS, 120V, Magnetic Ballast (547RSWSTCP)

- Magnetic ballast construction for all general fluorescent lighting
- Extends lamp life in frequently switched applications
- Color-coded ballast and package labels reduce misapplication errors (120V Yellow, 277V Red)

General characteristics

Ballast Type	Magnetic – Rapid Start
Starting Method	Preheat
Lamp Wiring	Series
Line Voltage Regulation (+/-)	5%
Ambient Temperature (MAX)	105°F (41°C)
Case Temperature (MAX)	90°C (194°F)
Ballast Factor	Normal
Power Factor Correction	
Sound Rating	A (20-24 decibels)
Additional Info	Auto-restart, Thermally protected

Electrical characteristics

Supply Current Frequency	60 Hz

Order information

Std. pack	Pallet Pack	DIY Pack	IP Pack
			68193

Dimensions

Wiring diagram – LFL 29 – see example on page 15-7	
Case dimensions – Ref Drawing 9 – see page 15-8	
Length (L)	6.5 in (165 mm)
Width (W)	1.75 in (44 mm)
Height (H)	1.38 in (35 mm)
Mounting dimensions	
Bracket Length (BL)	6.4 in (164 mm)
Mount Length (M)	6.0 in (152 mm)
Mount Width (X or F)	
Mount Slots (MS)	0.25 in (6 mm)
Weight	1.0 lbs
Exit Type	Side
Remote Mounting Distance to Lamp	10 ft
Remote Mounting Wire Gauge	18 AWG
Lead lengths	**Length (± 1 in)**
Black	15 in (381 mm)
White	15 in (381 mm)
Blue	9 in (229 mm)
Red	9 in (229 mm)

Specifications by lamp and wattage

Lamp	# of Lamps	Line Volts	System Watts	Nom. Line Current	System Ballast Factor	Ballast Efficacy Factor	Power Factor % (>=)	Crest Factor (<=)	THD (<=)	Min. Starting Temp (°F/°C)
FC8T9	1	120	20	0.32 A	0.76	3.8	52	1.8	30	50 / 10
FC6T9	1	120	20	0.31 A	0.78	3.7	53	1.8	30	50 / 10

Safety and performance UL Type 1 Outdoor UL Type HL UL Class P C UL US

68191 – GEM1FC8T9RS120DI

Magnetic Ballasts

1 – FC8T9, RS, 120V Magnetic Ballast (547RSWSTCP)

- Magnetic ballast construction for all general fluorescent lighting
- Extends lamp life in frequently switched applications
- Color-coded ballast and package labels reduce misapplication errors (120V Yellow, 277V Red)

General characteristics

Ballast Type	Magnetic - Rapid Start
Starting Method	Preheat
Lamp Wiring	Series
Line Voltage Regulation (+/-)	5%
Ambient Temperature (MAX)	219°F (104°C)
Case Temperature (MAX)	90°C (194°F)
Ballast Factor	Normal
Power Factor Correction	
Sound Rating	A (20-24 decibels)
Additional Info	Auto restart, Thermally protected

Electrical characteristics

Supply Current Frequency	60 Hz

Order information

Std. pack	Pallet Pack	DIY Pack	IP Pack
			68191

Dimensions

Wiring diagram – LFL 29 – see example on page 15-7	
Case dimensions – Ref Drawing 9 – see page 15-8	
Length (L)	6.5 in (167 mm)
Width (W)	1.75 in (44 mm)
Height (H)	1.38 in (35 mm)
Mounting dimensions	
Bracket Length (BL)	6.4 in (164 mm)
Mount Length (M)	6.0 in (152 mm)
Mount Width (X or F)	
Mount Slots (MS)	0.3 in (8 mm)
Weight	1.0 lbs
Exit Type	Side
Remote Mounting Distance to Lamp	10 ft
Remote Mounting Wire Gauge	18 AWG
Lead lengths	**Length (± 1 in)**
Black	15 in (381 mm)
White	15 in (381 mm)
Red	9 in (229 mm)
Blue	9 in (229 mm)

Specifications by lamp and wattage

Lamp	# of Lamps	Line Volts	System Watts	Nom. Line Current	System Ballast Factor	Ballast Efficacy Factor	Power Factor % (>=)	Crest Factor (<=)	THD (<=)	Min. Starting Temp (°F/°C)
FC8T9	1	120	20	0.32 A	0.76	3.8	52	1.8	30	50 / 10
FC6T9	1	120	20	0.31 A	0.78	3.7	53	1.8	30	50 / 10

Safety and performance UL Type 1 Outdoor UL Type HL UL Class P C UL US

See page E-1 for warranty information.

Magnetic Ballasts

For T8 and T12 Straight Lamps and 2 Pin CFL Lamps

68192 – GEM220TS120DIY

Magnetic Ballasts

2 – F20T12, F15T8, F15T12, F14T12, 120V, Magnetic Ballast (447LRVLHTCP)

- Magnetic ballast construction for all general fluorescent lighting
- Extends lamp life in frequently switched applications
- Color-coded ballast and package labels reduce misapplication errors (120V Yellow, 277V Red)

General characteristics

Ballast Type	Magnetic – Rapid Start
Starting Method	Preheat
Lamp Wiring	Series
Line Voltage Regulation (+/-)	5%
Ambient Temperature (MAX)	105°F (41°C)
Case Temperature (MAX)	90°C (194°F)
Ballast Factor	Normal
Power Factor Correction	
Sound Rating	A (20-24 decibels)
Additional Info	Auto-restart, Thermally protected

Electrical characteristics

Supply Current Frequency	60 Hz

Order information

Std. pack	Pallet Pack	DIY Pack	IP Pack
		68192	

Dimensions

Wiring diagram – LFL PS2 – see example on page 15-7	
Case dimensions – Ref Drawing 9 – see page 15-8	
Length (L)	6.5 in (167 mm)
Width (W)	1.75 in (44 mm)
Height (H)	1.38 in (35 mm)
Mounting dimensions	
Bracket Length (BL)	6.5 in (167 mm)
Mount Length (M)	6.0 in (152 mm)
Mount Width (X or F)	
Mount Slots (MS)	0.30 in (8 mm)
Weight	1.55 lbs
Exit Type	Side
Remote Mounting Distance to Lamp	10 ft
Remote Mounting Wire Gauge	18 AWG
Lead lengths	**Length (± 1 in)**
Black	15 in (381 mm)
Red	15 in (381 mm)
Blue	15 in (381 mm)
Yellow	15 in (381 mm)

Specifications by lamp and wattage

Lamp	# of Lamps	Line Volts	System Watts	Nom. Line Current	System Ballast Factor	Ballast Efficacy Factor	Power Factor % (>=)	Crest Factor (<=)	THD (<=)	Min. Starting Temp (°F/°C)
F20T12	2	120	32	0.50 A	0.75	2.05	52	1.7	30	50 / 10
F15T12	2	120	31	0.52 A	0.88	2.51	50	1.7	30	50 / 10
F15T8	2	120	30.5	0.52 A	0.85	2.54	51	1.7	30	50 / 10

Safety and performance UL Type 1 Outdoor UL Type HL UL Class P C UL US

68188 – GEM1CF13PH120

Magnetic Ballasts

120V Magnetic Ballast For one 2 Pin 13W CFL Lamp

- Magnetic ballast construction for all general fluorescent lighting
- Extends lamp life in frequently switched applications
- Color-coded ballast and package labels reduce misapplication errors (120V Yellow, 277V Red)

General characteristics

Ballast Type	Magnetic - Rapid Start
Starting Method	Preheat
Lamp Wiring	Series
Line Voltage Regulation (+/-)	5%
Ambient Temperature (MAX)	219°F (104°C)
Case Temperature (MAX)	90°C (194°F)
Ballast Factor	Normal
Power Factor Correction	
Sound Rating	A (20-24 decibels)
Additional Info	Auto restart, Thermally protected

Electrical characteristics

Supply Current Frequency	60 Hz

Order information

Std. pack	Pallet Pack	DIY Pack	IP Pack
			68188

Dimensions

Wiring diagram – LFL 24 – see example on page 15-7	
Case dimensions – Ref Drawing 2 – see page 15-8	
Length (L)	3.06 in (78 mm)
Width (W)	1.81 in (46 mm)
Height (H)	1.5 in (38 mm)
Mounting dimensions	
Bracket Length (BL)	6.4 in (163 mm)
Mount Length (M)	2.75 in (mm)
Mount Width (X or F)	
Mount Slots (MS)	0.3 in (8 mm)
Weight	0.66 lbs
Exit Type	Side
Remote Mounting Distance to Lamp	10 ft
Remote Mounting Wire Gauge	18 AWG
Lead lengths	**Length (± 1 in)**
Black	12 in (305 mm)
Black	12 in (305 mm)

Specifications by lamp and wattage

Lamp	# of Lamps	Line Volts	System Watts	Nom. Line Current	System Ballast Factor	Ballast Efficacy Factor	Power Factor % (>=)	Crest Factor (<=)	THD (<=)	Min. Starting Temp (°F/°C)
CFT/Q13W/GX23	1	120	15.5	0.24 A	0.93	6.00	50	1.6	15	50 / 10

Safety and performance Type 1 Outdoor UL Type HL UL Class P

See page E-1 for warranty information.

Fluorescent Accessories

Fluorescent Accessories	Prod Code	Description	Application	Pack Qty.	Pack Type
Starters	64818	FS-2-C/TP	Starters for 14, 15 & 20 Watt Flu. Lamps	6	Tray Pack
	64819	FS-4-C/TP	Starters for 30 & 40 Watt Flu. Lamps	6	Tray Pack
	64820	FS-25-C/TP	Starters for 22 & 25 Watt Flu. Lamps	6	Tray Pack
	64821	FS-5-C/TP	Starters for 4, 6 & 8 Watt Flu. Lamps	6	Tray Pack
Sockets	64822	BP-LP/TP	Low Profile Socket Set for Bi-Pin Flu. Lamps	7	Tray Pack
	64823	BP/TP	Socket Set for Bi-Pin Flu. Lamps	7	Tray Pack
	64824	BP-FM/TP	Face Mount Socket Set for Bi-Pin Flu. Lamps	7	Tray Pack
	64825	SL-SS/TP	Socket Set for Slimline Flu. Lamps	3	Tray Pack

See page E-1 for warranty information.

Wiring Diagrams
Magnetic Ballasts

LFL 21

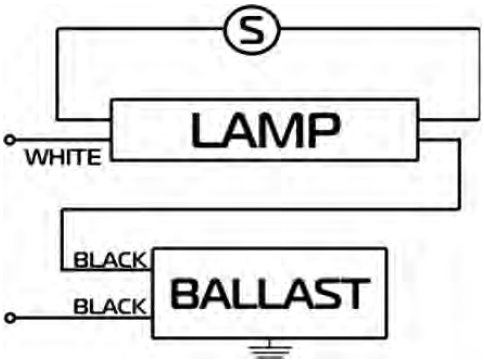

LFL 22

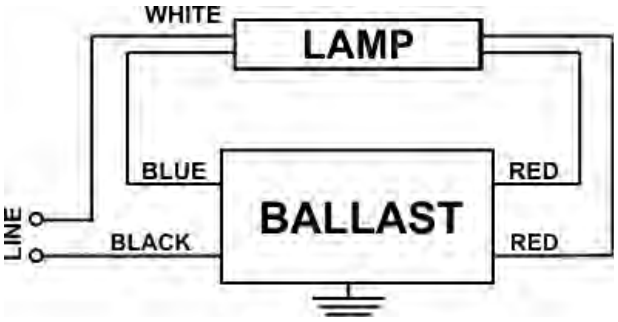

LFL 037

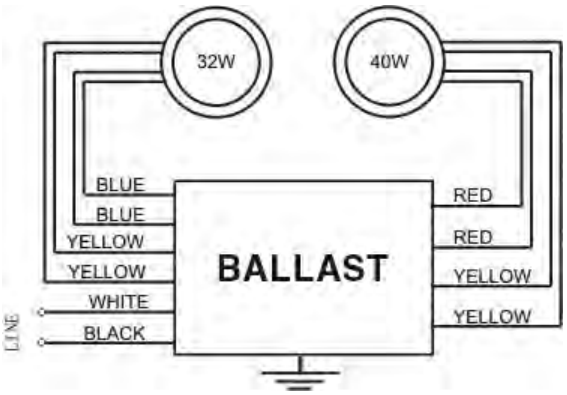

LFL 038

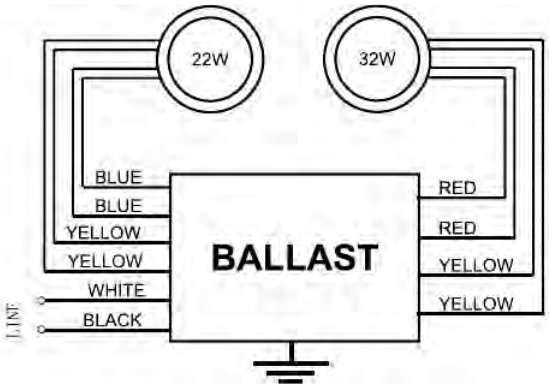

LFL 29

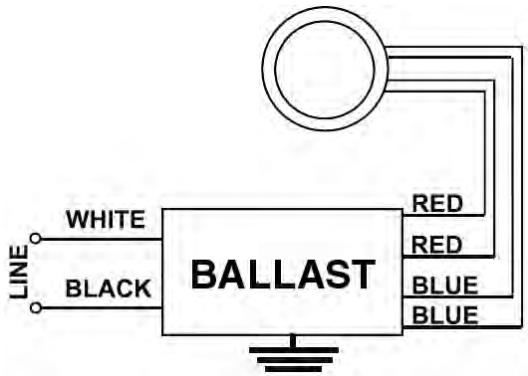

LFL PS2

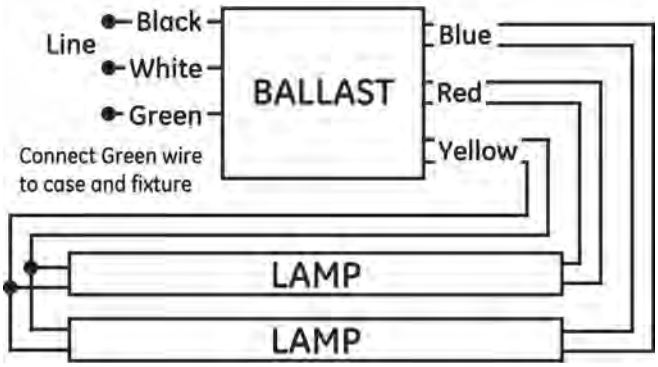

LFL 24

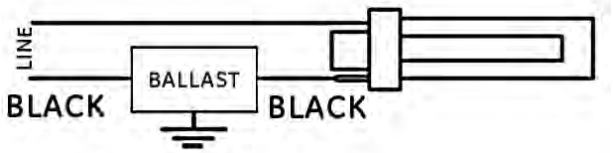

See page E-1 for warranty information.

Drawing 2

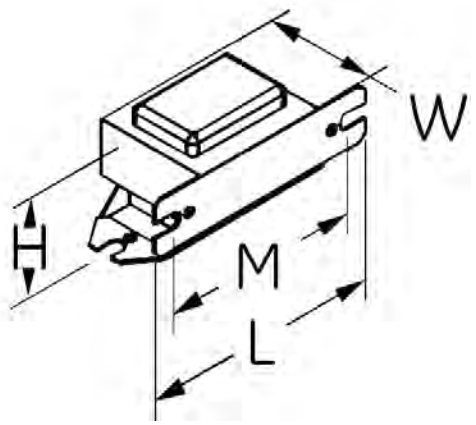

Drawing 9

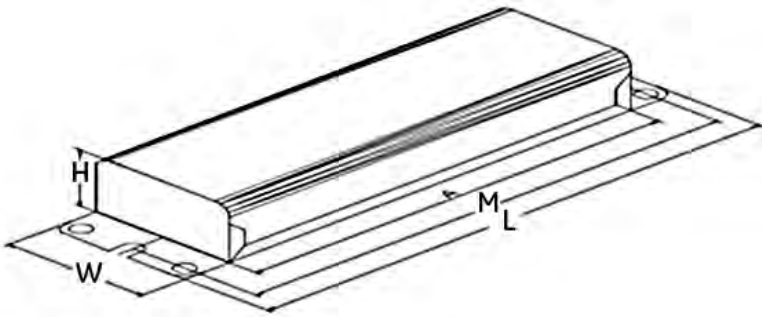

See page E-1 for warranty information.

Table of Contents
Sign Ballasts

GE T12HO Survivor Sign Ballasts

GE's line of T12HO Sign Ballasts provides a complete solution to all of your sign illumination needs. Designed with ease of retrofit in mind, the Survivor All-Weather Sign Ballast's footprint mirrors that of the most common sign ballasts found on the market today for quick and convenient replacement in existing box signs and displays.

The GE T12HO Survivor All-Weather Sign Ballast system simplifies the contractor and distributor's life with just 6 SKUs to choose from for all of their sign ballast requirements.

Our rugged GE Survivor All-Weather Ballasts are designed and manufactured to demanding specifications. The Survivor is crafted from high-grade steel laminations and tightly wound, vacuum impregnated, copper coils for superior heat dissipation and water resistance.

These components are then encased in high quality potting material for additional heat sinking and weather resistance. Finally, components are secured in a durable white steel powder coated box for superior corrosion protection and long life. All GE Survivor All-Weather Ballasts are backed by a 2 year limited warranty.

Sign Ballast for T12HO, 120 volt

Product Code	Description	Brand	Footage	# lamps	Total Lamp Footage																																	# of Lamps					
					2	4	6	8	10	12	14	16	18	20	22	24	26	28	30	32	34	36	38	40	42	44	46	48	1	2	3	4	5	6
72103	**GESB-0412-12-IP**	**GE**	4'-12'	1,2																														
ASB-0412-12-BL-TP		Advance	4'-12'	1,2																														
USB-0412-12		ULT	4'-12'	1,2																														
72104	**GESB-0620-24-IP**	**GE**	6'-20'	2,3,4																														
ASB-0620-24-BL-TP		Advance	6'-20'	2,3,4																														
USB-0816-14		ULT	8'-16'	1,2,3,4																														
72105	**GESB-1224-24-IP**	**GE**	12'-24'	2,3,4																														
ASB-1224-24-BL-TP		Advance	12'-24'	2,3,4																														
USB-1024-14		ULT	10'-24'	1,2,3,4																														
72106	**GESB-1240-46-IP**	**GE**	12'-40'	4,5,6																														
ASB-1240-24-BL-TP		Advance	12'-40'	4,5,6																														
USB-1632-24		ULT	16'-32'	2,3,4																														
ASB-2432-34-BL-TP		Advance	24'-32'	3,4																														
72107	**GESB-2040-24-IP**	**GE**	20'-40'	4,5,6																														
ASB-2040-24-BL-TP		Advance	20'-40'	2,3,4																														
USB-2036-46		ULT	20'-36'	4,5,6																														
72108	**GESB-2448-46-IP**	**GE**	24'-48'	4,5,6																														
ASB-2448-46-BL-TP		Advance	24'-48'	4,5,6																														
USB-2048-56		ULT	20'-48'	4,5,6																														

The best way to select or provide cross-reference to competition ballasts is to understand the sign ballast nomenclature.

GE Sign Ballast nomenclature

G E S B - 0 6 2 0 - 2 4 - I P

- **G E S B** — GE Sign Ballast
- **0 6 2 0** — This represents the min/max linear footage of lamps it can operate.
- **2 4** — The last number represents the number of lamps
- **I P** — Individual pack

Examples:

GESB-0620-24-IP can operate a minimum of two lamps at a total length of 6 feet, up to four lamps at a total length of 20 feet.

GESB-2040-24-IP can operate a minimum of four lamps at a total length of 20 feet, up to six lamps at a total length of 40 feet.

See page E-1 for warranty information.

Sign Ballasts
For T12 High Output Lamps

72103 – GESB-0412-12-IP

Sign Ballasts
T12HO Sign Ballast 4 to 12 ft, 1 to 2 lamps

- High-output ballasts for rugged outdoor sign cabinet applications
- Reliable low-temperature starting – as low as -20°F
- Ideal for high-moisture environments – UL Type 2 Outdoor and HL rating
- Class P thermal protection

General characteristics

Ballast Type	Magnetic – T12 Sign Illuminating
Starting Method	Rapid start
Lamp Wiring	Series
Line Voltage Regulation (+/-)	10%
Ambient Temperature (MAX)	105°F (41°C)
Case Temperature (MAX)	90°C (194°F)
Ballast Factor	Normal
Power Factor Correction	Active
Sound Rating	
Additional Info	Inherently Thermally Protected, UL Class P

Electrical characteristics

Supply Current Frequency	60 Hz

Order information

10 Pack	Pallet Pack	DIY Pack	IP Pack
72103			

Dimensions

Wiring diagrams – Sign 0412 – see example on page 16-7	
Case dimensions – Ref Drawing S1 – see page 16-9	
Length (L)	11.75 in (298 mm)
Width (W)	3.19 in (81 mm)
Height (H)	2.6 in (68 mm)
Mounting dimensions	
Bracket Length (BL)	
Mount Length (M)	11.0 in (279 mm)
Mount Width (X or F)	3.19 in (81 mm)
Mount Slots (MS)	
Weight	8.00 lbs
Exit Type	Side
Remote Mounting Distance to Lamp	Varies
Remote Mounting Wire Gauge	Varies
Lead lengths	**Length (± 1 in)**
White and Black	24 in (610 mm)
Brown and Blue	80 in (2032 mm)
Orange/Black	60 in (1524 mm)
Orange, Red and Yellow	60 in (1524 mm)
Blue/White	72 in (1829 mm)

Specifications by lamp and wattage

Lamp	# of Lamps	Line Volts	System Watts	Nom. Line Current	System Ballast Factor	Ballast Efficacy Factor	Power Factor % (>=)	Crest Factor (<=)	THD (<=)	Min. Starting Temp (°F/°C)
	2	120	170	1.48 A	0.89	0.52	98	1.9	15	-20/-30
F72T12/HO	1	120	100	0.92 A	0.81	0.81	92	2.0	35	-20/-30
F96T12/HO	1	120	120	1.03 A	0.84	0.70	96	2.0	25	-20/-30
	2	120	130	1.13 A	0.85	0.65	97	2.0	20	-20/-30
F48T12/HO	1	120	80	0.82 A	0.77	0.96	84	2.1	55	-20/-30
F24T12/HO	2	120	90	0.90 A	0.78	0.87	84	2.1	55	-20/-30

Safety and performance UL Type 2 Outdoor UL Listed cUL Listed 3-Year Warranty

72104 – GESB-0620-24-IP

Sign Ballasts
T12HO Sign Ballast 6 to 20 ft, 2 to 4 lamps

- High-output ballasts for rugged outdoor sign cabinet applications
- Reliable low-temperature starting – as low as -20°F
- Ideal for high-moisture environments – UL Type 2 Outdoor and HL rating
- Class P thermal protection

General characteristics

Ballast Type	Magnetic – T12 Sign Illuminating
Starting Method	Rapid start
Lamp Wiring	Series
Line Voltage Regulation (+/-)	10%
Ambient Temperature (MAX)	105°F (41°C)
Case Temperature (MAX)	90°C (194°F)
Ballast Factor	Normal
Power Factor Correction	Active
Sound Rating	
Additional Info	Inherently Thermally Protected, UL Class P

Electrical characteristics

Supply Current Frequency	50 Hz/60 Hz

Order information

10 Pack	Pallet Pack	DIY Pack	IP Pack
72104			

Dimensions

Wiring diagrams – Sign 0620 – see example on page 16-8	
Case dimensions – Ref Drawing S1 – see page 16-9	
Length (L)	11.75 in (298 mm)
Width (W)	3.19 in (81 mm)
Height (H)	2.6 in (68 mm)
Mounting dimensions	
Bracket Length (BL)	
Mount Length (M)	11.0 in (279 mm)
Mount Width (X or F)	3.19 in (81 mm)
Mount Slots (MS)	
Weight	16.00 lbs
Exit Type	Side
Remote Mounting Distance to Lamp	Varies
Remote Mounting Wire Gauge	Varies
Lead lengths	**Length (± 1 in)**
White and Black	24 in (610 mm)
Brown and Blue	80 in (2032 mm)
Orange/Black	60 in (1524 mm)
Orange, Red and Yellow	60 in (1524 mm)
Blue/White	72 in (1829 mm)

Specifications by lamp and wattage

Lamp	# of Lamps	Line Volts	System Watts	Nom. Line Current	System Ballast Factor	Ballast Efficacy Factor	Power Factor % (>=)	Crest Factor (<=)	THD (<=)	Min. Starting Temp (°F/°C)
F60T12/HO	4	120	300	2.56 A	1.06	0.35	95	1.7	15	-20 / -30
F72T12/HO	3	120	240	2.34 A	0.96	0.40	99	1.8	15	-20 / -30
F36T12/HO	2	120	115	1.41 A	0.87	0.76	87	2.0	45	-20 / -30

Safety and performance UL Type 2 Outdoor UL Listed cUL Listed 3-Year Warranty

See page E-1 for warranty information.

72105 – GESB-1224-24-IP

Sign Ballasts

T12HO Sign Ballast 12 to 24 ft, 2 to 4 lamps

- High-output ballasts for rugged outdoor sign cabinet applications
- Reliable low-temperature starting – as low as -20°F
- Ideal for high-moisture environments – UL Type 2 Outdoor and HL rating
- Class P thermal protection

General characteristics

Ballast Type	Magnetic –T12 Sign Illuminating
Starting Method	Rapid start
Lamp Wiring	Series
Line Voltage Regulation (+/-)	10%
Ambient Temperature (MAX)	105°F (41°C)
Case Temperature (MAX)	90°C (194°F)
Ballast Factor	Normal
Power Factor Correction	Active
Sound Rating	
Additional Info	Inherently Thermally Protected, UL Class P

Electrical characteristics

Supply Current Frequency	60 Hz

Order information

10 Pack	Pallet Pack	DIY Pack	IP Pack
72105			

Dimensions

Wiring diagrams – Sign 1224 – see example on page 16-8	
Case dimensions – Ref Drawing S1 – see page 16-9	
Length (L)	11.75 in (298 mm)
Width (W)	3.19 in (81 mm)
Height (H)	2.6 in (68 mm)
Mounting dimensions	
Bracket Length (BL)	
Mount Length (M)	11.0 in (279 mm)
Mount Width (X or F)	3.19 in (81 mm)
Mount Slots (MS)	
Weight	16.00 lbs
Exit Type	Side
Remote Mounting Distance to Lamp	Varies
Remote Mounting Wire Gauge	Varies
Lead lengths	**Length (± 1 in)**
White and Black	24 in (610 mm)
Brown and Blue	80 in (2032 mm)
Orange/Black	60 in (1524 mm)
Orange, Red and Yellow	60 in (1524 mm)
Blue/White	72 in (1829 mm)

Specifications by lamp and wattage

Lamp	# of Lamps	Line Volts	System Watts	Nom. Line Current	System Ballast Factor	Ballast Efficacy Factor	Power Factor % (>=)	Crest Factor (<=)	THD (<=)	Min. Starting Temp (°F/°C)
	4	120	285	2.70 A	0.84	0.29	99	1.7	10	-20 / -30
	3	120	230	2.10 A	0.82	0.36	96	1.7	15	-20 / -30
F72T12/HO	2	120	170	1.60 A	0.82	0.48	87	1.7	25	-20 / -30

Safety and performance UL Type 2 Outdoor UL Listed cUL Listed Class P 3-Year Warranty

72106 – GESB-1240-46-IP

Sign Ballasts

T12HO Sign Ballast 12 to 40 ft, 4 to 6 lamps

- High-output ballasts for rugged outdoor sign cabinet applications
- Reliable low-temperature starting – as low as -20°F
- Ideal for high-moisture environments – UL Type 2 Outdoor and HL rating
- Class P thermal protection

General characteristics

Ballast Type	Magnetic - T12 Sign Illuminating
Starting Method	Rapid start
Lamp Wiring	Series
Line Voltage Regulation (+/-)	10%
Ambient Temperature (MAX)	105°F (41°C)
Case Temperature (MAX)	90°C (194°F)
Ballast Factor	Normal
Power Factor Correction	Active
Sound Rating	
Additional Info	Inherently Thermally Protected, UL Class P

Electrical characteristics

Supply Current Frequency	60 Hz

Order information

10 Pack	Pallet Pack	DIY Pack	IP Pack
72106			

Dimensions

Wiring diagrams – Sign 1240 – see example on page 16-8	
Case dimensions – Ref Drawing S1 – see page 16-9	
Length (L)	11.75 in (298 mm)
Width (W)	3.19 in (81 mm)
Height (H)	2.6 in (68 mm)
Mounting dimensions	
Bracket Length (BL)	
Mount Length (M)	11.0 in (279 mm)
Mount Width (X or F)	3.19 in (81 mm)
Mount Slots (MS)	
Weight	18.00 lbs
Exit Type	Side
Remote Mounting Distance to Lamp	Varies
Remote Mounting Wire Gauge	Varies
Lead lengths	**Length (± 1 in)**
White and Black	24 in (610 mm)
Brown and Blue	80 in (2032 mm)
Orange/Black	60 in (1524 mm)
Orange, Red and Yellow	60 in (1524 mm)
Blue/White	72 in (1829 mm)

Specifications by lamp and wattage

Lamp	# of Lamps	Line Volts	System Watts	Nom. Line Current	System Ballast Factor	Ballast Efficacy Factor	Power Factor % (>=)	Crest Factor (<=)	THD (<=)	Min. Starting Temp (°F/°C)
(2) F96T12/HO + (4) F72T12/HO	6	120	466	4.00 A	0.78	0.17	98	1.6	10	-20 / -30
F72T12/HO	5	120	372	3.50 A	0.77	0.21	90	1.7	15	-20 / -30
F48T12/HO	5	120	237	2.90 A	0.72	0.30	69	1.8	20	-20 / -30
F36T12/HO	4	120	196	2.80 A	0.62	0.32	59	1.9	35	-20 / -30

Safety and performance UL Type 2 Outdoor UL Listed cUL Listed 3-Year Warranty

See page E-1 for warranty information.

Sign Ballasts
For T12 High Output Lamps

72107 – GESB-2040-24-IP
Sign Ballasts
T12HO Sign Ballast 20 to 40 ft, 2 to 4 lamps

- High-output ballasts for rugged outdoor sign cabinet applications
- Reliable low-temperature starting – as low as -20°F
- Ideal for high-moisture environments – UL Type 2 Outdoor and HL rating
- Class P thermal protection

General characteristics

Ballast Type	Magnetic - T12 Sign Illuminating
Starting Method	Rapid start
Lamp Wiring	Series
Line Voltage Regulation (+/-)	15%
Ambient Temperature (MAX)	105°F (41°C)
Case Temperature (MAX)	90°C (194°F)
Ballast Factor	Normal
Power Factor Correction	Active
Enclosure Type	Metal Can
Additional Info	Inherently Thermally Protected, UL Class P

Electrical characteristics

Supply Current Frequency	60 Hz

Order information

10 Pack	Pallet Pack	DIY Pack	IP Pack
72107			

Dimensions

Wiring diagrams – Sign 2040 – see example on page 16-8	
Case dimensions – Ref Drawing S1 – see page 16-9	
Length (L)	19.5 in (495 mm)
Width (W)	3.2 in (81 mm)
Height (H)	2.4 in (62 mm)
Mounting dimensions	
Bracket Length (BL)	
Mount Length (M)	18.6 in (473 mm)
Mount Width (X or F)	
Mount Slots (MS)	
Weight	22.2 lbs
Exit Type	Side
Remote Mounting Distance to Lamp	Varies
Remote Mounting Wire Gauge	Varies
Lead lengths	**Length (± 1 in)**
White and Black	24 in (610 mm)
Brown and Yellow	72 in (1829 mm)
Blue and Red	80 in (2032 mm)
Blue/White	54 in (1372 mm)

Specifications by lamp and wattage

Lamp	# of Lamps	Line Volts	System Watts	Nom. Line Current	System Ballast Factor	Ballast Efficacy Factor	Power Factor % (>=)	Crest Factor (<=)	THD (<=)	Min. Starting Temp (°F/°C)
	4	120	464	4.00 A	0.85	0.18	97	1.7	12	-22 / -30
	3	120	357	3.40 A	0.82	0.23	89	1.7	15	-22 / -30
F120T12/HO	2	120	255	3.00 A	0.75	0.29	71	1.8	30	-22 / -30

Safety and performance UL Type 2 Outdoor UL Listed UL Type HL 3-Year Warranty

72108 – GESB-2448-46-IP
Sign Ballasts
T12HO Sign Ballast 6 to 12 ft, 4 to 6 lamps

- High-output ballasts for rugged outdoor sign cabinet applications
- Reliable low-temperature starting – as low as -20°F
- Ideal for high-moisture environments – UL Type 2 Outdoor and HL rating
- Class P thermal protection

General characteristics

Ballast Type	Magnetic – T12 Sign Illuminating
Starting Method	Rapid start
Lamp Wiring	Series
Line Voltage Regulation (+/-)	15%
Ambient Temperature (MAX)	105°F (41°C)
Case Temperature (MAX)	90°C (194°F)
Ballast Factor	Normal
Power Factor Correction	Active
Enclosure Type	Metal Can
Additional Info	Inherently Thermally Protected, UL Class P

Electrical characteristics

Supply Current Frequency	60 Hz

Order information

10 Pack	Pallet Pack	DIY Pack	IP Pack
72108			

Dimensions

Wiring diagrams – Sign 2448 – see example on page 16-8	
Case dimensions – Ref Drawing S1 – see page 16-9	
Length (L)	19.5 in (495 mm)
Width (W)	3.2 in (81 mm)
Height (H)	2.4 in (62 mm)
Mounting dimensions	
Bracket Length (BL)	
Mount Length (M)	18.6 in (473 mm)
Mount Width (X or F)	
Mount Slots (MS)	
Weight	22.2 lbs
Exit Type	Side
Remote Mounting Distance to Lamp	Varies
Remote Mounting Wire Gauge	Varies
Lead lengths	**Length (± 1 in)**
White and Black	24 in (610 mm)
Orange, Brown and Blue	50 in (1270 mm)
Orange/Black	50 in (1270 mm)
Red	80 in (2032 mm)
Blue/White	72 in (1829 mm)
Yellow	70 in (1778 mm)

Specifications by lamp and wattage

Lamp	# of Lamps	Line Volts	System Watts	Nom. Line Current	System Ballast Factor	Ballast Efficacy Factor	Power Factor % (>=)	Crest Factor (<=)	THD (<=)	Min. Starting Temp (°F/°C)
	6	120	621	5.20 A	0.86	0.14	99	1.6	10	-20 / -30
F96T12/HO	5	120	546	4.70 A	0.87	0.16	96	1.6	10	-20 / -30
	5	120	453	4.30 A	0.80	0.18	87	1.7	15	-20 / -30
F72T12/HO	4	120	373	4.00 A	0.72	0.19	78	1.7	20	-20 / -30

Safety and performance UL Type 2 Outdoor UL Listed UL Type HL 3-Year Warranty

88921 – USB-0412-12-IP

Sign Ballasts

4 to 12 ft, 1 to 2 lamps

- High-output ballasts for rugged outdoor sign cabinet applications
- Reliable low-temperature starting – as low as -20°F
- Ideal for high-moisture environments – UL Type 2 Outdoor and HL rating
- Class P thermal protection

General characteristics

Ballast Type	Magnetic – T12 Sign Illuminating
Starting Method	Rapid start
Lamp Wiring	Series
Line Voltage Regulation (+/-)	
Ambient Temperature (MAX)	105°F (41°C)
Case Temperature (MAX)	90°C (194°F)
Ballast Factor	Normal
Power Factor Correction	
Sound Rating	
Additional Info	Inherently Thermally Protected, UL Class P

Electrical characteristics

Supply Current Frequency	60 Hz

Order information

10 Pack	Pallet Pack	DIY Pack	IP Pack
88921			

Dimensions

Wiring diagrams – Sign S1A, Sign S2A – see example on page 16-7	
Case dimensions – Ref Drawing S1 – see page 16-9	
Length (L)	10.5 in (269 mm)
Width (W)	3.19 in (81 mm)
Height (H)	1.75 in (44 mm)
Mounting dimensions	
Bracket Length (BL)	11.7 in (297 mm)
Mount Length (M)	11.1 in (283 mm)
Mount Width (X or F)	
Mount Slots (MS)	
Weight	8.00 lbs
Exit Type	Side
Remote Mounting Distance to Lamp	Varies
Remote Mounting Wire Gauge	Varies
Lead lengths	**Length (± 1 in)**
White and Black	24 in (610 mm)
Blue and Red	38 in (965 mm)
Yellow	48 in (1219 mm)

Specifications by lamp and wattage

Lamp	# of Lamps	Line Volts	System Watts	Nom. Line Current	System Ballast Factor	Ballast Efficacy Factor	Power Factor % (>=)	Crest Factor (<=)	THD (<=)	Min. Starting Temp (°F/°C)
F72T12/HO	2	120	160	1.35 A	1.00	0.62	90			-20 / -29

Safety and performance

UL Type 2 Outdoor UL Type HL CSA UL Listed

Note: This product is no longer manufactured. Remaining stock will be sold.

See page E-1 for warranty information.

Wiring Diagrams
Sign Ballasts

SIGN S1A

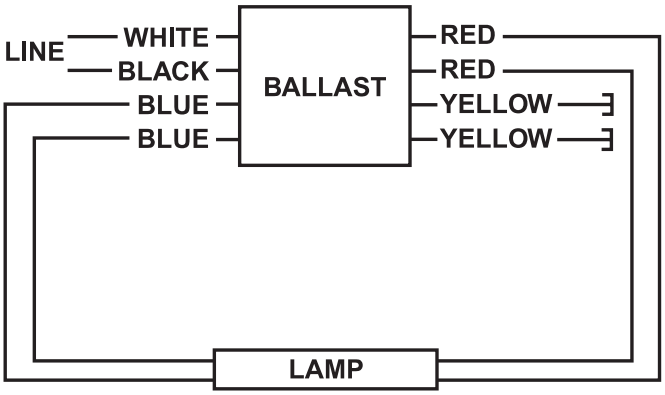

SIGN S2A

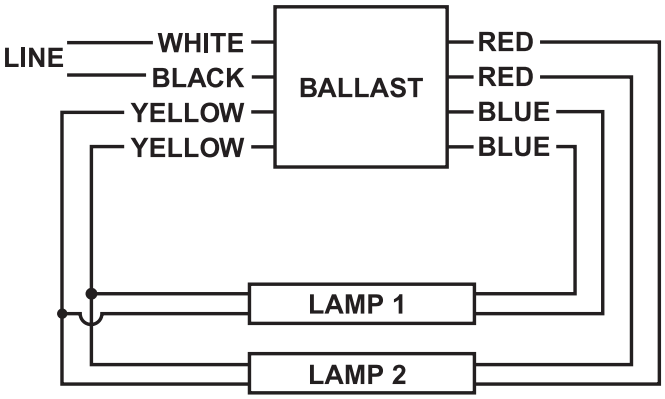

MOUNT LAMPS WITHIN 1 OF GROUNDED METAL REFLECTOR

SIGN 0412

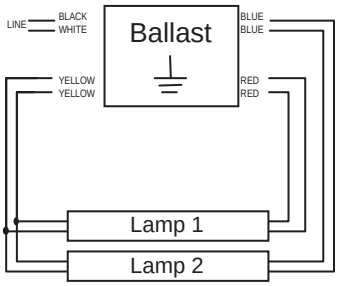

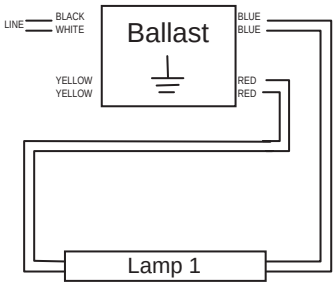

See page E-1 for warranty information.

Wiring Diagrams
Sign Ballasts

SIGN 0620

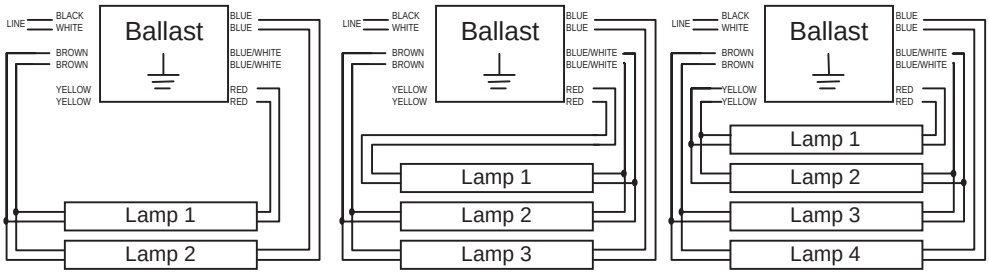

SIGN 1224

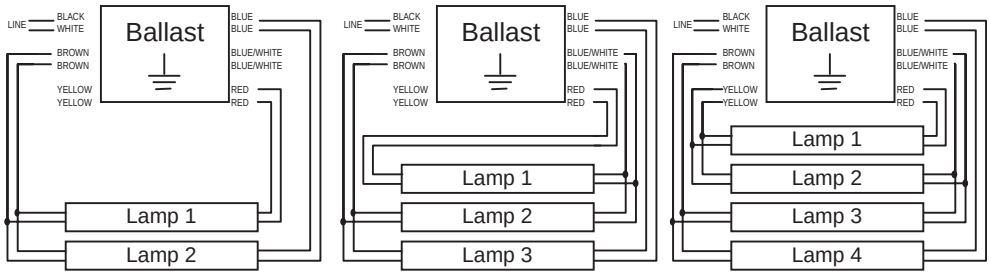

SIGN 1240

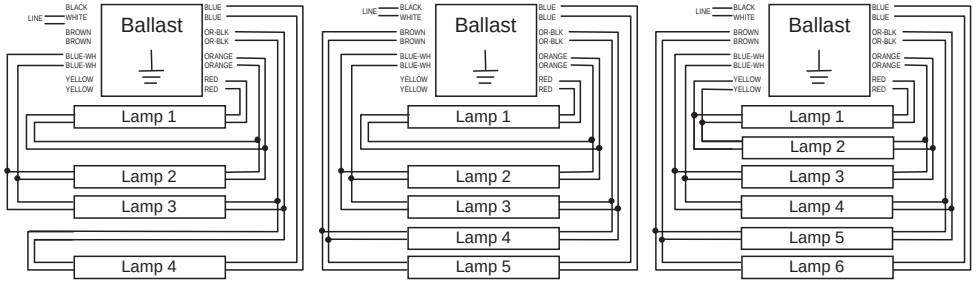

SIGN 2040

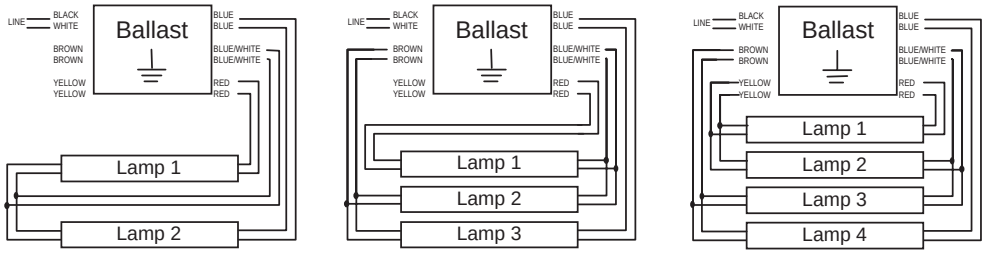

SIGN 2448

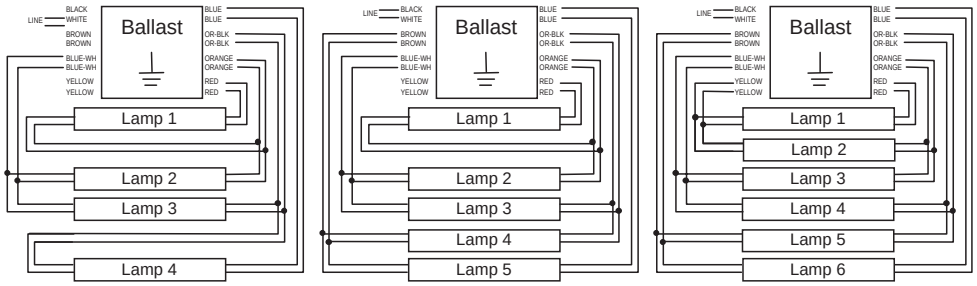

See page E-1 for warranty information.

Case Dimensions
Sign Ballasts

S1

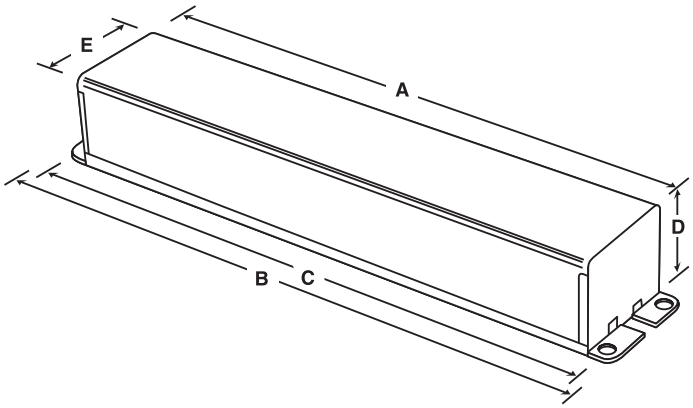

Notes

See page E-1 for warranty information.

Table of Contents
Compact Fluorescent Ballasts

Understanding Compact Fluorescent Ballasts

GE compact fluorescent (CFL) ballasts provide energy saving alternatives to halogen, incandescent or HID light sources. GE Multivolt ProLine® CFL programmed start ballasts combine universal voltage (108-305V) technology with multi-lamp capability, dual entry color-coded connectors and ultra system reliability to create an industry leading CFL solution for commercial and residential applications.

UltraMax® and UltraStart® High Lumen Biax® ballasts with the High Lumen WattMiser® Biax® lamp provides the perfect solution for high efficiency and high lumen output in a small space.

UltraMax® Instant Start Ballasts:

- For use in long burn cycles (>10 hr cycles) to maintain lamp life
- High efficiency (>90%) design
- Universal voltage (120-277V)
- Striation control circuitry
- Small compact housing

UltraStart® Programmed Start Ballasts:

- For use in shorter burn cycles (<3 hr cycles) to extend lamp life
- High efficiency (>90%) cathode cutout design
- Universal voltage (120-277V)
- Striation control circuitry
- Small compact housing
- Parallel lamp operation
- <700ms fast starting time
- Ballasts available for both F40/30W and F40/25W lamps

Multivolt ProLine® CFL ballasts are offered in three different configurations:
1) -SE description – dual entry (side or bottom) connectors, 2) -BES – bottom entry with studs for mounting to junction boxes and 3) -3W – 3-way mounting kits that allow you to have all three mounting options with one kit.

Multivolt ProLine® CFL ballasts come with a five-year ballast and one-year lamp limited warranty. These ballasts also meet the EPA's ENERGY STAR® fixture program requirements with a Consumer Class B EMI rating for residential applications, as well as a high power factor ballast design.

Use the GE Multivolt ProLine® CFL Multi-Lamp compatibility chart (page 17-3) to find the right ballast for your need.

ProLine® CFL Date Code System

Date Code Format: 01 200801 = Week2008 = Year

UltraMax® and UltraStart® Biax® ballasts have the same date code system as all linear fluorescent ballasts.

GE Compact Fluorescent Ballast nomenclature

G E C 2 1 3 - M V P S - S E

- GEC = GE Compact Ballast
- 213 = Max number of lamps and Primary Lamp type
- MVPS = MV = Multivolt (108 to 305 volts); UNV = Universal Voltage (Multi-Voltage); 120 or 277 = voltage; PS = Programmed Start; SI = Series Instant Start; PH = Preheat; RS = Rapid Start; RH = less than 20% THD
- SE = Side & Bottom Entry; BES = Bottom Entry with Studs; 3W = 3-Way Kit (SE, BE, BES); IP = Individual Pack

See page E-1 for warranty information.

GE Multivolt ProLine® CFL Multi-Lamp Capability

	Lamp Type	GEC213-MVPS	GEC218-MVPS	GEC226-MVPS	GEC242-MVPS	GEC140MAX-A	GEC240MAX-A	GEC340MAX-A	GEC225MVPS-A	GEC240MVPS-A
	1 x CFQ13W (G24q) CFTR13W (GX24q)	x								
	2 x CFQ13W (G24q) CFTR13W (GX24q)	x								
	1 x CFQ18W (G24q) CFTR18W (GX24q)	x	x							
	2 x CFQ18W (G24q) CFTR18W (GX24q)		x							
	1 x CFQ26W (G24q) CFTR26W (GX24q)		x	x	x					
	2 x CFQ26W (G24q) CFTR26W (GX24q)			x	x					
	1 x CFQ32W (G24q) CFTR32W (GX24q)			x	x					
	2 x CFQ32W (G24q) CFTR32W (GX24q)				x					
	1 x CFQ42W (G24q) CFTR42W (GX24q)			x	x					
	2 x CFQ42W (G24q) CFTR42W (GX24q)				x					
	1 x 57W (CFTR/GX24q)				x					
T4	1 x 70W (CFTR/GX24q)				x					
	1 x FC9T5-22W (G10q)				x					
	2 x FC9T5-22W (G10q)				x					
	1 x FC12T5-40W (G10q)				x					
	2 x FC12T5-40W (G10q)				x					
	1 x 22W + 1 x 4OW (FC9T5 + FC12T5) (G10q)				x					
	1 x FC16T9 (G10q)			x						
T5 Circline	1 x FC16T9 40W (G10q)									
	2 x F14T5 (G5)									
	2 x F13T5 (G5)									
	2 x F24T5/HO (G5)			x						
	1 x F28T5/HE (G5)					x	x			
	2 x F28T5/HE (G5)						x	x		
T5	3 x F28T5/HE (G5)							x		
	1 x FT18W (2G11)									
	2 x FT18W (2G11)			x						
	1 x FT24W (2G11)				x					
	2 x FT24W (2G11)			x	x					
	1 x FT36W (2G11) or CFM36W (2G11)				x					
	2 x FT36W (2G11) or CFM36W (2G11)				x					
	1 x FT39W (2G11)				x					
	2 x FT39W (2G11)				x					
	1 x FT40/25W or FT40/28W (2G11)					x	x		x	
	2 x FT40/25W or FT40/28W (2G11)						x	x	x	
	3 x FT40/25W or FT40/28W (2G11)							x		
	1 x FT40W (2G11)				x		x			x
	2 x FT40W (2G11)				x		x	x		x
	3 x FT40W (2G11)							x		
FT TT5	1 x FT55W (2G11)				x			x		
	1 x F32T8 (G13)					x*	x*			
	2 x F32T8 (G13)						x*	x*		
T8	3 x F32T8 (G13)							x*		
	1 x CFS10W (GR10q)	x								
	2 x CFS10W (GR10q)	x								
	1 x CFS16W (GR10q)	x								
	2 x CFS16W (GR10q)		x							
	1 x CFS21W (GR10q)		x							
	2 x CFS21W (GR10q)		x	x						
	1 x CFS28W (GR10q)		x		x					
	2 x CFS28W (GR10q)				x					
	1 x CFS38W (GR10q)									
	2 x CFS38W (GR10q)									
2D	1 x CFS55W (GR10q)				x					

* GEC ballast offers End of Lamp Life (EOL) protection with F32T8 lamps

See page E-1 for warranty information.

CFL – Cross Reference Chart

GE	Universal	Advance	Osram	Robertson
GE213-MVPS-3W	C213UNVSE/BE/BES	ICF-2513-H1-LD	QTP 1/2X13CF/UNV	PSM213CQMY
GE218-MVPS-3W	C218UNVSE/BE/BES	ICF-2518H1-LD REL-2Q18 VEL-2Q18 R-2Q18-4P-TP V-2Q18-4P-TP	QTP1/2X18CF/UNV	PSM218CQMY
GE226MVPS-3W	C218UNVSE/BE/BES	ICF-2526-H1-LD REL-1T32 VEL-1T32 REL-1T32 VEL-1T42	QTP 1X26/32/42CF/UNV QTP 2X26/UNV QTP 1/2XCF/UNV	PSM226CQMY
GE242-MVPS-3W	C2642UNVSE/BE/BES	ICF-2S26-M1-BS-QS ICF-2S26-M1-BS-QS ICF-2S42-M2-BS	QTP 2X26/32/42CF/UNV	PSM226CQMVDWCE/S

See page E-1 for warranty information.

Specifications: Multivolt ProLine® CFL Quick Reference Chart

Preliminary	Lamp Type	# of Lamps	Input Volts	Dual Side/ Bottom Exit-SE	Bottom Exit with Studs - BES	3-Way Mount Kit - 3W	Input Watts 2Lamp/ 1Lamp	Line Current 2Lamp/ 1Lamp	Power Factor 2Lamp/ 1Lamp	MAX THD % 2Lamp/ 1Lamp	Ballast Factor 2Lamp/ 1Lamp	Ballast Efficiency Factor 2Lamp/ 1Lamp
			120				29/16	0.25/.16	0.99/.96	10	1.00	3.45/6.25
	CFQ13W/G24q	2 or 1 lamp	277				29/16	0.11/.06	0.99/.96	10	1.00	3.45/6.25
			120				29/16	0.25/.16	0.99/.96	10	1.00	3.45/6.25
	CFTR13W/GX24q	2 or 1 lamp	277				29/16	0.11/.06	0.99/.96	10	1.00	3.45/6.25
			120				20	0.17	0.99	12	1.00	5.00
	CFQ18W/GX24q	1	277				20	0.07	0.97	12	1.00	5.00
			120				20	0.17	0.99	12	1.00	5.00
	CFTR18W/GX24q	1	277				20	0.07	0.97	12	1.00	5.00
			120				31	0.26	0.99	10	1.00	3.22
	F14T5	1	277				31	0.12	0.98	10	1.00	3.22
			120				30	0.25	0.99	10	1.00	3.33
	F13T5	1	277				30	0.11	0.98	10	1.00	3.33
			120				23/13	0.19/.11	0.97/.96	11/14	0.95/1.05	4.13/8.08
	CFS10W/GR10q	2 or 1 lamp	277				23/13	0.09/.05	0.97/.96	11/14	0.95/1.05	4.13/8.08
			120				17	0.14	0.96	12	1.00	5.88
GEC213-MVPS-xx	CFS16W/GR10q	1	277	63101	63091	63089	17	0.06	0.96	12	1.00	5.88
			120				35/19	0.3/.16	0.99/.97	10	0.95/1.00	2.71/5.26
	CFQ18WG24q	2 or 1 lamp	277				35/19	0.13/.07	0.99/.97	10	0.95/1.0	2.71/5.26
			120				39/20	0.33/.17	0.97	10	1.05	2.69/5.25
	CFTR18W/GX24q	2 or 1 lamp	277				39/20	0.14/.08	0.99/.97	10	1.05	2.69/5.25
			120				28	0.24	0.99	12	1.00	3.57
	CFQ26W/G24q	1	277				28	0.10	0.96	12	1.00	3.57
			120				28	0.24	0.99	12	1.00	3.57
	CFTR26W/GX24q	1	277				28	0.10	0.96	12	1.00	3.57
			120				40/20	0.33/.16	0.99/.97	10/15	0.91/.9	2.28/4.5
	CFS21W/GR10q	2 or 1 lamp	277				40/20	.14/.07	0.99/.97	10/15	0.91/.90	2.28/4.5
			120				37	0.31	0.99	10	1.00	2.70
	CFS16W/GR10q	2	277				37	0.13	0.99	10	1.00	2.70
			120				31	0.26	0.99	10	1.00	3.23
GEC218-MVPS-xx	CFS28W/GR10q	1	277	63096	63098	63093	31	0.11	0.97	10	1.00	3.23
			120				51/27	0.43/.23	0.99/.98	10	1.00	1.96/3.7
	CFQ26W/G24q	2 or 1 lamp	277				51/27	0.19/.1	0.99/.98	10	1.00	1.96/3.7
			120				54/29	0.45/.24	0.99	10	1/1.1	1.85/3.79
	CFTR26W/GX24q	2 or 1 lamp	277				54/29	0.2/.11	0.99/.98	10	1/1.1	1.85/3.79
			120				46	0.38	0.98	10	0.98	2.13
	CFTR42W/GX24q	1	277				46	0.17	0.98	10	0.98	2.13
			120				36	0.31	0.98	10	0.98	2.72
	CFTR32W/GX24q	1	277				36	0.13	0.98	10	0.98	2.72
			120				51	0.04	0.99	10	1.12	2.20
	CFS21W/GR10q	2	277				51	0.18	0.99	10	1.12	2.20
			120				36	0.30	0.99	10	0.93	2.58
	FT18W/2G11	2	277				36	0.13	0.97	12	0.93	2.58
			120				48	0.41	0.99	10	0.93	1.94
	FT24W/2G11	2	277				48	0.18	0.9	10	0.93	1.94
			120				51	0.44	0.99	10	1.00	1.96
	F24T5 HO	2	277				51	0.19	0.98	10	1.00	1.96
			120				43	0.36	0.99	10	1.00	2.33
GEC226-MVPS-xx	FC16T9 40W	1	277	63099	63098	63099	43	0.16	0.97	10	1.00	2.33
			120				94/47	0.77/.4	1.00	10	1.00	1.14/2.13
	CFTR42W/GX24q	2 or 1 lamp	277				93/47	0.38/.18	1.00	10	1.00	1.08/2.13
			120				63/42	0.53/.35	0.95/.96	10	0.95/.96	1.51/2.29
	CFTR32W/GX24q	2 or 1 lamp	277				63/42	0.23/.13	0.95/.96	12	0.95/.96	1.51/2.29
	CFQ26W/G24q		120				54/32	0.45/.27	0.9/1.0	10	0.9/1.0	1.67/3.12
	CFTR26W/GX24q	2 or 1 lamp	277				54/32	0.21/.13	0.9/1.0	12	0.9/1.0	1.67/3.12
			120				63/33	0.52/.27	0.78/.8	10	0.78/.8	1.25/2.45
	CFM36W/2G10	2 or 1 lamp	277				62/33	0.23/.13	0.79/.80	10/15	0.79/.8	1.27/2.44
			120				82/45	0.69/.37	0.95/1.0	10	0.95/1.0	1.16/2.22
	FT39W/2G11	2 or 1 lamp	277				82/45	0.3/.17	0.95/1.0	10/12	0.95/1.0	1.16/2.22
			120				70/37	0.59/.31	0.8/.84	10	0.8/.84	1.13/2.24
	FC12T5 40W	2 or 1 lamp	277				70/37	0.26.14	0.81/.84	10/15	0.81/.84	1.15/2.24
			120				52/28	0.44/.23	1.10	10	1.10	2.11/3.97
	FC9T6 22W	2 or 1 lamp	277				52/28	0.19/.11	1.1/1.11	12	1.1/1.11	2.11/3.92
			120				58	0.49	1.00	10	1.00	1.72
	CFTR57W/GX24q	1	277				58	0.22	1.00	12	1.00	1.72
			120				73	0.61	1.00	10	1.00	1.37
	CFTR70W/GX24q	1	277				73	0.27	1.00	12	1.00	1.37
			120				43	0.36	0.71	10	0.71	1.65
	FT55W/2G11	1	277				44	0.16	0.72	12	0.72	1.66
			120				82/45	0.69/.37	0.95/1.00	10	0.95/1.00	1.16/2.22
	FT40W/2G11	2 or 1 lamp	277				82/45	0.3/.17	0.95/1.00	10/12	0.95/1.00	1.16/2.22
			120				63/33	0.52/.27	0.78/.80	10	0.78/.80	1.25/2.45
	FT36W/2G11	2 or 1 lamp	277				62/33	0.23/.13	0.79/.80	10/15	0.79/.8	1.27/2.44
			120				54/26	0.45/.22	1/.92	10	1/.92	1.85/3.56
	FT24W/2G11	2 or 1 lamp	277				54/27	0.2/.1	1/.92	12/15	1/.92	1.85/3.48
			120				60/34	0.5/.29	0.95/1.0	10	0.95/1	1.6/2.94
	CFS28W/GR10q	2 or 1 lamp	277				60/34	0.22/.14	0.97/1.00	10/15	0.97/1.0	1.62/2.94
			120				67	0.55	0.90	10	0.90	1.34
	FC9T5+FC12T5	1+1	277				67	0.25	0.90	10	0.90	1.34
			120				33	0.28	0.49	10	0.49	1.48
GEC242-MPVS-xx	CFS55W/GRY10Q-3	1	277	63101	63102	63100	32	0.13	0.49	10	0.49	1.53

See page E-1 for warranty information.

ProLine® CFL Electronic Ballasts
Compact Fluorescent Ballasts For 13 – 70W T4 CFL Lamps

63091 – GEC213-MVPS-BES
63092 – GEC213-MVPS-SE
63089 – GEC213-MVPS-3W

ProLine® CFL Electronic Ballasts

2 or 1 – CFQ13W/G24q 120-227V ProLine® PS

- Multi-voltage technology means a single ballast handles voltage from 108V to 305V
- Programmed starting for extended lamp life
- End-of-Lamp-Life protection
- Color coded poke-in connectors simplifies wiring

General characteristics

Ballast Type	Electronic – Program / Rapid Start
Starting Method	Programmed start
Lamp Wiring	Series
Line Voltage Regulation (+/-)	10%
Ambient Temperature (MAX)	104°F (40°C)
Case Temperature (MAX)	70 °C (158 °F)
Ballast Factor	Normal
Power Factor Correction	Active
Sound Rating	A (20-24 decibels)
Additional Info	End-of-Life Protection (EOL), Thermally protected, Universal voltage

Electrical characteristics

Supply Current Frequency	50 Hz/60 Hz

Order information

10 Pack	Pallet Pack	DIY Pack	IP Pack
63089, 63092, 63091			

Dimensions

Wiring diagram – CFL 1-2 – see example on page 17-15

Case dimensions – Ref Drawing -13 – see page 17-17

Physical Parameters	3W	BES	SE
Length (L)	5.0 in (127 mm)	4.26 in (107 mm)	5.0 in (127 mm)
Width (W)	2.4 in (61 mm)	2.4 in (61 mm)	2.4 in (61 mm)
Height (H)	1.0 in (25 mm)	1.0 in (25 mm)	1.0 in (25 mm)
Mounting dimensions			
Bracket Length (BL)			
Mount Length (M)	4.63 in (118 mm)		
Mount Width (X or F)	2.4 in (61 mm)		
Mount Slots (MS)			
Weight	0.381 lbs	0.423 lbs	0.395 lbs
Exit Type	Dual Entry (SE/BE, BES, 3W)		
Remote Mounting Distance to Lamp	20 ft		
Remote Mounting Wire Gauge	18 AWG		

Specifications by lamp and wattage

Lamp	# of Lamps	Line Volts	System Watts	Nom. Line Current	System Ballast Factor	Ballast Efficacy Factor	Power Factor % (>=)	Crest Factor (<=)	TQH % (<=)	Min. Starting Temp (°F/°C)
	2	120	32	0.26 A	1.04	3.30	99	1.7	10	-20 / -29
	2	277	32	0.12 A	1.04	3.30	96	1.7	10	-20 / -29
	1	120	15	0.19 A	1.09	7.30	99	1.7	10	-20 / -29
CFQ13W/G24q	1	277	15	0.06 A	1.09	7.30	89	1.7	18	-20 / -29
	2	120	32	0.27 A	1.07	3.30	99	1.7	10	-20 / -29
	2	277	32	0.12 A	1.07	3.30	96	1.7	10	-20 / -29
	1	120	16	0.13 A	1.10	6.90	99	1.7	10	-20 / -29
CFTR13W/GX24q	1	277	16	0.07 A	1.10	6.90	88	1.7	18	-20 / -29
	2	120	26	0.22 A	1.06	4.10	99	1.7	10	-20 / -29
	2	277	25	0.10 A	1.06	4.20	94	1.7	11	-20 / -29
	1	120	13	0.10 A	1.09	8.40	99	1.7	10	-20 / -29
CFS10W/GR10q	1	277	13	0.07 A	1.09	8.40	84	1.7	21	-20 / -29
	1	120	19	0.16 A	0.99	5.20	99	1.7	10	-20 / -29
CFQ18W/G24q	1	277	19	0.07 A	0.99	5.20	89	1.7	16	-20 / -29
	1	120	19	0.16 A	0.96	5.10	99	1.7	10	-20 / -29
CFTR18W/GX24q	1	277	19	0.08 A	0.96	5.10	88	1.7	15	-20 / -29
	1	120	17	0.14 A	1.00	5.90	99	1.7	10	-20 / -29
CFS16W/GR10q	1	277	17	0.07 A	1.00	5.90	90	1.7	16	-20 / -29

Safety and performance FCC Part 18 Class B UL Class P UL Type 1 Outdoor No PCB's ANSI Standard C82.11-Cons 2002 ANSI Standard C62.41-1991

See page E-1 for warranty information.

ProLine® CFL Electronic Ballasts

Compact Fluorescent Ballasts For 13 – 70W T4 CFL Lamps

63094 – GEC218-MVPS-BES
63096 – GEC218-MVPS-SE
63093 – GEC218-MVPS-3W

ProLine® CFL Electronic Ballasts

2 or 1 – CFQ18W/G24q 120-227V ProLine® PS

- Multi-voltage technology means a single ballast handles voltage from 108V to 305V
- Programmed starting for extended lamp life
- End-of-Lamp-Life protection
- Color coded poke-in connectors simplifies wiring

General characteristics

Ballast Type	Electronic – Program / Rapid start
Starting Method	Programmed start
Lamp Wiring	Series
Line Voltage Regulation (+/-)	10%
Ambient Temperature (MAX)	104°F (40°C)
Case Temperature (MAX)	70°C (158 °F)
Ballast Factor	Normal
Power Factor Correction	Active
Sound Rating	A (20-24 decibels)
Additional Info	Auto-restart, Thermally protected, Universal voltage

Electrical characteristics

Supply Current Frequency	50 Hz/60 Hz

Order information

10 Pack	Pallet Pack	DIY Pack	IP Pack
63093, 63096, 63094			

Dimensions

Wiring diagram – CFL 1-2 – see example on page 17-15

Case dimensions – Ref Drawing -13 – see page 17-17

Physical Parameters	3W	BES	SE
Length (L)	5.0 in (127 mm)	4.26 in (107 mm)	5.0 in (127 mm)
Width (W)	2.4 in (61 mm)	2.4 in (61 mm)	2.4 in (61 mm)
Height (H)	1.0 in (25 mm)	1.0 in (25 mm)	1.0 in (25 mm)
Mounting dimensions			
Bracket Length (BL)			
Mount Length (M)	4.63 in (118 mm)		
Mount Width (X or F)	2.4 in (61 mm)		
Mount Slots (MS)			
Weight	0.412 lbs	0.454 lbs	0.426 lbs
Exit Type	Dual Entry (SE/BE, BES, 3W)		
Remote Mounting Distance to Lamp	20 ft		
Remote Mounting Wire Gauge	18 AWG		

Specifications by lamp and wattage

Lamp	# of Lamps	Line Volts	System Watts	Nom. Line Current	System Ballast Factor	Ballast Efficacy Factor	Power Factor % (>=)	Crest Factor (<=)	TQH % (<=)	Min. Starting Temp (°F/°C)
	2	120	43	0.35 A	1.05	2.40	99	1.7	10	-20 / -29
	2	277	42	0.15 A	1.05	2.50	96	1.7	10	-20 / -29
	1	120	21	0.17 A	1.08	5.10	99	1.7	10	-20 / -29
CFQ18W/G24q	1	277	21	0.08 A	1.08	5.10	88	1.7	15	-20 / -29
	2	120	44	0.37 A	1.04	2.40	99	1.7	10	-20 / -29
	2	277	43	0.16 A	1.04	2.40	96	1.7	10	-20 / -29
	1	120	22	0.19 A	1.07	4.90	99	1.7	10	-20 / -29
CFTR18W/GX24q	1	277	22	0.08 A	1.07	4.90	87	1.7	14	-20 / -29
	2	120	45	0.38 A	0.86	1.90	99	1.7	10	-20 / -29
	2	277	44	0.16 A	0.86	2.00	96	1.7	10	-20 / -29
	1	120	22	0.19 A	0.93	4.20	99	1.7	10	-20 / -29
CFS21W/GR10q	1	277	22	0.09 A	0.93	4.20	88	1.7	15	-20 / -29
	2	120	39	0.32 A	1.00	2.60	99	1.7	10	-20 / -29
CFS16W/GR10q	2	277	38	0.14 A	1.00	2.60	95	1.7	10	-20 / -29
	1	120	22	0.19 A	0.91	4.10	99	1.7	10	-20 / -29
CFQ26W/GX24q	1	277	22	0.09 A	0.92	4.20	89	1.7	14	-20 / -29
	1	120	26	0.21 A	0.85	3.30	99	1.7	10	-20 / -29
CFTR26W/GX24q	1	277	26	0.10 A	0.85	3.30	89	1.7	14	-20 / -29
	1	120	25	0.21 A	0.87	3.50	99	1.7	10	-20 / -29
CFS28W/GR10q	1	277	25	0.10 A	0.87	3.50	91	1.7	13	-20 / -29

Safety and performance

FCC Part 18 Class B UL Class P UL Type 1 Outdoor No PCB's ANSI Standard C82.11-Cons 2002 ANSI Standard C62.41-1991

See page E-1 for warranty information.

ProLine® CFL Electronic Ballasts
Compact Fluorescent Ballasts For 13 – 70W T4 CFL Lamps

63098 – GEC226-MVPS-BES
63099 – GEC226-MVPS-SE
63097 – GEC226-MVPS-3W

ProLine® CFL Electronic Ballasts

2 – CFQ26W, FT24 or 1 – 24W CFTR32 120-227V ProLine® PS

- Multi-voltage technology means a single ballast handles voltage from 108V to 305V
- Programmed starting for extended lamp life
- End-of-Lamp-Life protection
- Color coded poke-in connectors simplifies wiring

General characteristics

Ballast Type	Electronic – Program / Rapid start
Starting Method	Programmed start
Lamp Wiring	Series
Line Voltage Regulation (+/-)	10%
Ambient Temperature (MAX)	104°F (40°C)
Case Temperature (MAX)	75°C (167°F)
Ballast Factor	Normal
Power Factor Correction	Active
Sound Rating	A (20-24 decibels)
Additional Info	Auto restart, Thermally protected, Universal voltage

Electrical characteristics

Supply Current Frequency	50 Hz/60 Hz

Order information

10 Pack	Pallet Pack	DIY Pack	IP Pack
63098, 63099, 63097			

Dimensions

Wiring diagram – CFL 1-2 – see example on page 17-15

Case dimensions – Ref Drawing -13 – see page 17-17

Physical Parameters	3W	BES	SE
Length (L)	5.0 in (127 mm)	4.26 in (107 mm)	5.0 in (127 mm)
Width (W)	2.4 in (61 mm)	2.4 in (61 mm)	2.4 in (61 mm)
Height (H)	1.0 in (25 mm)	1.0 in (25 mm)	1.0 in (25 mm)
Mounting dimensions			
Bracket Length (BL)			
Mount Length (M)	4.63 in (118 mm)		
Mount Width (X or F)	2.4 in (61 mm)		
Mount Slots (MS)			
Weight	0.419 lbs	0.461 lbs	0.434 lbs
Exit Type	Dual Entry (SE/BE, BES, 3W)		
Remote Mounting Distance to Lamp	12 ft		
Remote Mounting Wire Gauge	18 AWG		

Specifications by lamp and wattage

Lamp	# of Lamps	Line Volts	System Watts	Nom. Line Current	System Ballast Factor	Ballast Efficacy Factor	Power Factor % (>=)	Crest Factor (<=)	TQH % (<=)	Min. Starting Temp (°F/°C)
	2	120	56	0.47 A	1.02	1.82	99	1.7	10	-20 / -29
	2	277	54	0.20 A	1.02	1.89	97	1.7	11	-20 / -29
	1	120	30	0.25 A	1.04	3.47	99	1.7	10	-20 / -29
CFQ26W/G24q	1	277	30	0.12 A	1.04	3.47	93	1.7	13	-20 / -29
	2	120	64	0.53 A	0.97	1.52	99	1.7	10	-20 / -29
	2	277	64	0.23 A	0.88	1.38	97	1.7	12	-20 / -29
	1	120	32	0.26 A	10.01	3.16	99	1.7	10	-20 / -29
CFTR26W/GX24q	1	277	32	0.12 A	1.00	3.16	94	1.7	13	-20 / -29
	2	120	56	0.47 A	1.12	2.00	99	1.7	10	-20 / -29
CFS21W/GR10q	2	277	55	0.20 A	1.11	2.02	96	1.7	11	-20 / -29
	1	120	51	0.42 A	0.92	1.80	99	1.7	10	-20 / -29
CFTR42W/GX24q	1	277	50	0.18 A	0.92	1.84	97	1.7	12	-20 / -29
	1	120	39	0.33 A	1.24	3.18	99	1.7	10	-20 / -29
CFTR32W/GX24q	1	277	39	0.15 A	1.23	3.15	95	1.7	13	-20 / -29
	1	120	40	0.33 A	0.89	2.23	99	1.7	10	-20 / -29
FC16T9 40W	1	277	40	0.14 A	0.94	2.35	95	1.7	13	-20 / -29
	1	120	27	0.23 A	1.04	3.85	99	1.7	10	-20 / -29
FT24W/2G11	1	277	27	0.11 A	1.10	4.07	91	1.7	14	-20 / -29
	1	120	35	0.29 A	0.94	2.69	99	1.7	10	-20 / -29
FT36W/2G11	1	277	35	0.13 A	0.94	2.69	94	1.7	13	-20 / -29
	1	120	33	0.27 A	0.97	2.94	99	1.7	10	-20 / -29
FT39W/2G11	1	277	33	0.12 A	0.98	2.97	94	1.7	14	-20 / -29

Safety and performance FCC Part 18 Class B UL Class P UL Type 1 Outdoor No PCB's ANSI Standard C82.11-Cons 2002 ANSI Standard C62.41-1991

See page E-1 for warranty information.

ProLine® CFL Electronic Ballasts

Compact Fluorescent Ballasts For 13 – 70W T4 CFL Lamps

63101 – GEC242-MVPS-BES (replaces 47506)
63102 – GEC242-MVPS-SE (replaces 47509)
63100 – GEC242-MVPS-3W

ProLine® CFL Electronic Ballasts

2 – 42/36/32/28/26/24 watt 120-277V Proline® PS

- Electronic compact fluorescent ballasts for all general fluorescent applications
- Low-profile case

General characteristics

Ballast Type	Electronic – Program / Rapid start
Starting Method	Programmed start
Lamp Wiring	Series
Line Voltage Regulation (+/-)	10%
Ambient Temperature (MAX)	122°F (50°C)
Case Temperature (MAX)	75°C (167°F)
Ballast Factor	Normal
Power Factor Correction	Active
Sound Rating	A (20-24 decibels)
Additional Info	Auto restart, Thermally protected, Universal voltage

Electrical characteristics

Supply Current Frequency	50 Hz/60 Hz

Order information

10 Pack	Pallet Pack	DIY Pack	IP Pack
63101, 63102, 63100			

Dimensions

Wiring diagram – CFL 1-2 – see example on page 17-15	
Case dimensions – Ref Drawing 13 – see page 17-17	
Length (L)	5 in (127 mm)
Width (W)	3.0 in (76 mm)
Height (H)	1.38 in (35 mm)
Mounting dimensions	
Bracket Length (BL)	4.63 in (118 mm)
Mount Length (M)	
Mount Width (X or F)	
Mount Slots (MS)	
Weight	0.90 lbs
Exit Type	Dual Entry (SE/BE, BES, 3W)

Specifications by lamp and wattage

Lamp	# of Lamps	Line Volts	System Watts	Nom. Line Current	System Ballast Factor	Ballast Efficacy Factor	Power Factor % (>=)	Crest Factor (<=)	THD (<=)	Min. Starting Temp (°F/°C)
	2	120	94	0.77 A	1.00	1.14	0.99	1.7	10	0/-18
	2	277	93	0.38 A	1.00	1.08	0.98	1.7	10	0/-18
	1	120	47	0.40 A	1.00	2.13	0.99	1.7	10	0/-18
CFTR42W/GX24q	1	277	47	0.18 A	1.00	2.13	0.96	1.7	10	0/-18
	2	120	63	0.53 A	0.95	1.51	0.99	1.7	10	0/-18
	2	277	63	0.23 A	0.95	1.51	0.98	1.7	12	0/-18
	1	120	42	0.35 A	0.96	2.29	0.99	1.7	10	0/-18
CFTR32W/GX24q	1	277	42	0.13 A	0.96	2.29	0.96	1.7	12	0/-18
	2	120	54	0.45 A	0.90	1.67	0.99	1.7	10	0/-18
CFQ26W/G24q,	2	277	54	0.21 A	0.90	1.67	0.97	1.7	12	0/-18
CFTR26W/	1	120	32	0.27 A	1.00	3.12	0.99	1.7	10	0/-18
GX24q	1	277	32	0.13 A	1.00	3.12	0.95	1.7	12	0/-18
	2	120	63	0.52 A	0.78	1.25	0.99	1.7	10	0/-18
	2	277	62	0.23 A	0.79	1.27	0.98	1.7	10	0/-18
	1	120	33	0.27 A	0.80	2.45	0.99	1.7	10	0/-18
CFM36W/2G10	1	277	33	0.13 A	0.80	2.44	0.94	1.7	15	0/-18
	2	120	82	0.69 A	0.95	1.16	0.99	1.7	10	0/-18
	2	277	82	0.30 A	0.95	1.16	0.98	1.7	10	0/-18
	1	120	45	0.37 A	1.00	2.22	0.99	1.7	10	0/-18
FT39W/2G11	1	277	45	0.17 A	1.00	2.22	0.96	1.7	12	0/-18
	2	120	70	0.59 A	0.80	1.13	0.99	1.7	10	0/-18
	2	277	70	0.26 A	0.81	1.15	0.98	1.7	10	0/-18
	1	120	37	0.31 A	0.84	2.24	0.99	1.7	10	0/-18
FC12T5 40W	1	277	37	0.14 A	0.84	2.24	0.95	1.7	15	0/-18
	2	120	52	0.44 A	1.10	2.11	0.99	1.7	10	0/-18
	2	277	52	0.19 A	1.10	2.11	0.97	1.7	12	0/-18
	1	120	28	0.23 A	1.10	3.97	0.99	1.7	10	0/-18
FC9T5 22W	1	277	28	0.11 A	1.11	3.92	0.93	1.7	12	0/-18
	1	120	58	0.49 A	1.0	1.72	0.99	1.7	10	0/-18
CFTR57W/GX24q	1	277	58	0.22 A	1.0	1.72	0.97	1.7	12	0/-18
	1	120	73	0.61 A	1.0	1.37	0.99	1.7	10	0/-18
CFTR70W/GX24q	1	277	73	0.27 A	1.0	1.37	0.97	1.7	12	0/-18
	1	120	43	0.36 A	0.71	1.65	0.99	1.7	10	0/-18
FT55W/2G11	1	277	44	0.16 A	0.72	1.66	0.96	1.7	12	0/-18
	2	120	82	0.69 A	0.95	1.16	0.99	1.7	10	0/-18
	2	277	82	0.30 A	0.95	1.16	0.98	1.7	10	0/-18
	1	120	45	0.37 A	1.00	2.22	0.99	1.7	10	0/-18
FT40W/2G11	1	277	45	0.17 A	1.00	2.22	0.96	1.7	12	0/-18
	2	120	63	0.52 A	0.78	1.25	0.99	1.7	10	0/-18
	2	277	62	0.23 A	0.79	1.27	0.98	1.7	10	0/-18
	1	120	33	0.27 A	0.80	2.45	0.99	1.7	10	0/-18
FT36W/2G11	1	277	33	0.13 A	0.80	2.44	0.94	1.7	15	0/-18
	2	120	54	0.45 A	1.00	1.85	0.99	1.7	10	0/-18
	2	277	54	0.20 A	1.00	1.85	0.97	1.7	12	0/-18
	1	120	26	0.22 A	0.92	3.56	0.99	1.7	10	0/-18
FT24W/2G11	1	277	27	0.10 A	0.92	3.48	0.92	1.7	15	0/-18
	2	120	60	0.50 A	0.95	1.60	0.99	1.7	10	0/-18
	2	277	60	0.22 A	0.97	1.62	0.98	1.7	10	0/-18
	1	120	34	0.29 A	1.00	2.94	0.99	1.7	10	0/-18
CFS28W/GR10q	1	277	34	0.14 A	1.00	2.94	0.93	1.7	15	0/-18
	1+1	120	67	0.55 A	0.90	1.34	0.99	1.7	10	0/-18
FC9T5+FC12T5	1+1	277	67	0.25 A	0.90	1.34	0.98	1.7	10	0/-18
CFS55W/	1	120	33	0.28 A	0.49	1.48	0.99	1.7	10	0/-18
GRY10q-3	1	277	32	0.13 A	0.49	1.53	0.94	1.7	10	0/-18

Safety and performance

FCC Part 18 Class B at 120 volts UL Class P UL Listed cUL

See page E-1 for warranty information.

High-Lumen Biax® UltraMax® Instant Start
Compact Fluorescent Ballasts

75948 – GEC140MAX-A

High-Lumen Biax® UltraMax® Instant Start

1 – FT40W-25W/2G11 Biax - 120-277V UltraMax® Instant Start

- Electronic compact fluorescent ballasts for all general fluorescent applications
- Low-profile case
- Multi-Voltage technology handles voltage from 120 to 277V
- Instant start electronic ballast for long lamp starting cycles and low initial cost
- Anti-Striation Control for better light quality, with no striations
- Lamp End-of-Life Safety Shutdown Circuit with Re-Lamping Auto-reset

General characteristics

Ballast Type	Electronic – Standard Instant Start
Starting Method	Instant start
Lamp Wiring	
Line Voltage Regulation (+/-)	10%
Ambient Temperature (MAX)	105°F (41°C)
Case Temperature (MAX)	70 °C (158 °F)
Ballast Factor	Normal
Power Factor Correction	Active
Sound Rating	A (20-24 decibels)
Additional Info	End-of-Life Protection (EOL), Thermally protected

Electrical characteristics

Supply Current Frequency	50 Hz /60 Hz

Order information

10 Pack	Pallet Pack	DIY Pack	IP Pack
75948			

Dimensions

Wiring diagram – CFL IS1 – see example on page 17-16	
Case dimensions – Ref Drawing -A – see page 17-17	
Length (L)	9.5 in (241 mm)
Width (W)	1.7 in (43 mm)
Height (H)	1.18 in (30 mm)
Mounting dimensions	
Bracket Length (BL)	
Mount Length (M)	8.9 in (226 mm)
Mount Width (X or F)	1.18 in (30 mm)
Mount Slots (MS)	0.3 in (8 mm)
Weight	1.40 lbs
Exit Type	Side
Remote Mounting Distance to Lamp	10 ft
Remote Mounting Wire Gauge	18 AWG
Lead lengths	**Length (± 1 in)**
Blue	31 in (787 mm)
Red	31 in (787 mm)
White	25 in (635 mm)
Black	25 in (635 mm)

Specifications by lamp and wattage

Lamp	# of Lamps	Line Volts	System Watts	Nom. Line Current	Ballast Factor	Power Factor % (>=)	Crest Factor (<=)	THD (<=)	Min. Starting Temp (°F/°C)
	1	120	38	0.32 A	0.90	99	1.7	10	0/-18
FT40W/4P	1	277	38	0.14 A	0.90	95	1.7	10	0/-18
	1	120	34	0.29 A	1.00	99	1.7	10	0/-18
FT40W/28W/4P	1	277	34	0.13 A	1.00	95	1.7	10	0/-18
	1	120	31	0.25 A	1.00	99	1.7	10	0/-18
FT40W/25W/4P	1	277	31	0.12 A	1.00	90	1.7	10	0/-18
	1	120	33	0.27 A	0.94	99	1.7	10	0/-18
F32T8	1	277	33	0.13 A	0.94	95	1.7	10	0/-18
	1	120	36	0.30 A	1.10	99	1.7	10	0/-18
F28T5/HE	1	277	36	0.14 A	1.10	95	1.7	10	0/-18

Safety and performance

UL Type 1 Outdoor UL Type HL FCC – CLASS A Non-Consumer UL Class P CSA UL Listed

See page E-1 for warranty information.

High-Lumen Biax® UltraMax® Instant Start
Compact Fluorescent Ballasts

71435 – GEC240MAX-A

High-Lumen Biax® UltraMax® Instant Start

2 or 1 – FT40W-25W/2G11 Biax - 120-277V UltraMax® Instant Start

- Electronic compact fluorescent ballasts for all general fluorescent applications
- Low-profile case
- Multi-Voltage technology handles voltage from 120 to 277V
- Energy saving, high efficiency instant start electronic ballast (> 90%)
- Instant start electronic ballast for long lamp starting cycles and low initial cost
- Anti-Striation Control for better light quality, with no striations
- Lamp End-of-Life Safety Shutdown Circuit with Re-Lamping Auto-reset

General characteristics

Ballast Type	Electronic – High Efficiency Instant Start
Starting Method	Instant start
Lamp Wiring	Parallel
Line Voltage Regulation (+/-)	10%
Ambient Temperature (MAX)	105°F (41°C)
Case Temperature (MAX)	70 °C (158 °F)
Ballast Factor	Normal
Power Factor Correction	Active
Sound Rating	A (20-24 decibels)
Additional Info	End-of-Life Protection (EOL), Thermally protected

Electrical characteristics

Supply Current Frequency	50 Hz /60 Hz

Order information

10 Pack	Pallet Pack	DIY Pack	IP Pack
71435			

Dimensions

Wiring diagram – CFL IS2 – see example on page 17-16	
Case dimensions – Ref Drawing -A – see page 17-17	
Length (L)	9.5 in (241 mm)
Width (W)	1.7 in (43 mm)
Height (H)	1.18 in (30 mm)
Mounting dimensions	
Bracket Length (BL)	
Mount Length (M)	8.9 in (226 mm)
Mount Width (X or F)	1.18 in (30 mm)
Mount Slots (MS)	0.3 in (8 mm)
Weight	1.40 lbs
Exit Type	Side
Remote Mounting Distance to Lamp	12 ft
Remote Mounting Wire Gauge	18 AWG
Lead lengths	**Length (± 1 in)**
Blue	31 in (787 mm)
Red	31 in (787 mm)
White	25 in (635 mm)
Black	25 in (635 mm)

Specifications by lamp and wattage

Lamp	# of Lamps	Line Volts	System Watts	Nom. Line Current	Ballast Factor	Power Factor % (>=)	Crest Factor (<=)	THD (<=)	Min. Starting Temp (°F/°C)
	2	120	69	0.58 A	0.90	99	1.7	10	0/-18
	2	277	68	0.25 A	0.90	95	1.7	10	0/-18
	1	120	42	0.35 A	1.00	99	1.7	10	0/-18
FT40W/4P	1	277	42	0.16 A	1.00	95	1.7	15	0/-18
	2	120	63	0.54 A	1.00	99	1.7	10	0/-18
	2	277	62	0.23 A	1.00	95	1.7	10	0/-18
	1	120	38	0.32 A	1.11	99	1.7	10	0/-18
FT40W/28W/4P	1	277	38	0.14 A	1.11	95	1.7	15	0/-18
	2	120	58	0.50 A	1.00	99	1.7	10	0/-18
	2	277	57	0.21 A	1.00	90	1.7	10	0/-18
	1	120	35	0.29 A	1.15	99	1.7	10	0/-18
FT40W/25W/4P	1	277	35	0.13 A	1.15	95	1.7	15	0/-18
	2	120	63	0.54 A	0.94	99	1.7	10	0/-18
	2	277	62	0.23 A	0.94	95	1.7	10	0/-18
	1	120	38	0.32 A	1.08	99	1.7	10	0/-18
F32T8	1	277	38	0.14 A	1.08	95	1.7	15	0/-18
	2	120	69	0.59 A	1.10	99	1.7	10	0/-18
	2	277	68	0.25 A	1.10	95	1.7	10	0/-18
	1	120	41	0.35 A	1.26	99	1.7	10	0/-18
F28T5/HE	1	277	41	0.15 A	1.26	95	1.7	15	0/-18

Safety and performance

UL Type 1 Outdoor UL Type HL FCC – CLASS A Non-Consumer UL Class P CSA UL Listed

See page E-1 for warranty information.

High-Lumen Biax® UltraMax® Instant Start
Compact Fluorescent Ballasts

71436 – GEC340MAX-A

High-Lumen Biax® UltraMax® Instant Start

3 – FT40W-25W/2G11 Biax - 120-277V UltraMax® Instant Start

- Electronic compact fluorescent ballasts for all general fluorescent applications
- Low-profile case
- Multi-Voltage technology handles voltage from 120 to 277V
- Energy saving, high efficiency instant start electronic ballast (> 90%)
- Instant start electronic ballast for long lamp starting cycles and low initial cost
- Anti-Striation Control for better light quality, with no striations
- Lamp End-of-Life Safety Shutdown Circuit with Re-Lamping Auto-reset

General characteristics

Ballast Type	Electronic – High Efficiency Instant Start
Starting Method	Instant start
Lamp Wiring	Parallel
Line Voltage Regulation (+/-)	10%
Ambient Temperature (MAX)	105°F (41°C)
Case Temperature (MAX)	70 °C (158 °F)
Ballast Factor	Normal
Power Factor Correction	Active
Sound Rating	A (20-24 decibels)
Additional Info	End-of-Life Protection (EOL), Thermally protected

Electrical characteristics

Supply Current Frequency	50 Hz /60 Hz

Order information

10 Pack	Pallet Pack	DIY Pack	IP Pack
71436			

Dimensions

Wiring diagram – CFL IS3– see example on page 17-16	
Case dimensions – Ref Drawing -A – see page 17-17	
Length (L)	9.5 in (241 mm)
Width (W)	1.7 in (43 mm)
Height (H)	1.18 in (30 mm)
Mounting dimensions	
Bracket Length (BL)	
Mount Length (M)	8.9 in (226 mm)
Mount Width (X or F)	1.18 in (30 mm)
Mount Slots (MS)	0.3 in (8 mm)
Weight	1.40 lbs
Exit Type	Side
Remote Mounting Distance to Lamp	12 ft
Remote Mounting Wire Gauge	18 AWG
Lead lengths	**Length (± 1 in)**
Blue	31 in (787 mm)
Red	31 in (787 mm)
White	25 in (635 mm)
Black	25 in (635 mm)

Specifications by lamp and wattage

Lamp	# of Lamps	Line Volts	System Watts	Nom. Line Current	Ballast Factor	Power Factor % (>=)	Crest Factor (<=)	THD (<=)	Min. Starting Temp (°F/°C)
	3	120	100	0.86 A	0.90	99	1.7	10	0/-18
	3	277	99	0.36 A	0.90	99	1.7	10	0/-18
	2	120	76	0.65 A	0.98	99	1.7	10	0/-18
FT40W/4P	2	277	75	0.27 A	0.98	95	1.7	10	0/-18
	3	120	93	0.79 A	1.00	99	1.7	10	0/-18
	3	277	91	0.33 A	1.00	95	1.7	10	0/-18
	2	120	70	0.59 A	1.07	99	1.7	10	0/-18
FT40W/28W/4P	2	277	69	0.25 A	1.07	95	1.7	10	0/-18
	3	120	85	0.73 A	1.00	99	1.7	10	0/-18
	3	277	84	0.31 A	1.00	95	1.7	10	0/-18
	2	120	64	0.53 A	1.11	99	1.7	10	0/-18
FT40W/25W/4P	2	277	63	0.23 A	1.11	95	1.7	10	0/-18
	3	120	92	0.78 A	0.94	99	1.7	10	0/-18
	3	277	90	0.33 A	0.94	95	1.7	10	0/-18
	2	120	69	0.59 A	1.03	99	1.7	10	0/-18
F32T8	2	277	68	0.25 A	1.03	95	1.7	10	0/-18
	3	120	102	0.87 A	1.10	99	1.7	10	0/-18
	3	277	100	0.37 A	1.10	99	1.7	10	0/-18
	2	120	76	0.66 A	1.19	99	1.7	10	0/-18
F28T5/HE	2	277	75	0.28 A	1.19	95	1.7	10	0/-18

Safety and performance

UL Type 1 Outdoor UL Type HL FCC – CLASS A Non-Consumer UL Class P CSA UL Listed

See page E-1 for warranty information.

High-Lumen Biax® UltraStart® Programmed Start
Compact Fluorescent Ballasts

71437 – GEC240MVPS-A

High-Lumen Biax® UltraStart® Programmed Start for 40W

2 or 1 – FT40W/2G11 Biax - 120-277V UltraStart® Programmed Start

- Electronic compact fluorescent ballasts for all general fluorescent applications
- Low-profile case
- Multi-Voltage technology handles voltage from 120 to 277V
- A new generation of ultra-efficient Programmed Start ballasts (> 90% efficiency)
- Parallel Lamp Operation keeps lights on when one lamp fails
- Anti-Striation Control for better light quality, with no striations
- Lamp End-of-Life Safety Shutdown Circuit with Re-Lamping Auto-reset
- Starting time visually the same as instant start

General characteristics

Ballast Type	Electronic – Program / Rapid Start
Starting Method	Programmed start
Lamp Wiring	Parallel
Line Voltage Regulation (+/-)	10%
Ambient Temperature (MAX)	105°F (41°C)
Case Temperature (MAX)	70 °C (158 °F)
Ballast Factor	Normal
Power Factor Correction	Active
Sound Rating	A (20-24 decibels)
Additional Info	Auto-restart, Thermally protected, Universal voltage

Electrical characteristics

Supply Current Frequency	50 Hz /60 Hz

Order information

10 Pack	Pallet Pack	DIY Pack	IP Pack
71437			

Dimensions

Wiring diagram – CFL PS2 – see example on page 17-16	
Case dimensions – Ref Drawing -A – see page 17-17	
Length (L)	9.5 in (241 mm)
Width (W)	1.7 in (43 mm)
Height (H)	1.18 in (30 mm)
Mounting dimensions	
Bracket Length (BL)	
Mount Length (M)	8.9 in (226 mm)
Mount Width (X or F)	1.18 in (30 mm)
Mount Slots (MS)	0.3 in (8 mm)
Weight	1.40 lbs
Exit Type	Side
Remote Mounting Distance to Lamp	12 ft
Remote Mounting Wire Gauge	18 AWG
Lead lengths	**Length (± 1 in)**
Black	25 in (635 mm)
Blue and Red	33 in (838 mm)
Yellow	33 in (838 mm)
White	25 in (635 mm)

Specifications by lamp and wattage

Lamp	# of Lamps	Line Volts	System Watts	Nom. Line Current	Ballast Factor	Power Factor % (>=)	Crest Factor (<=)	THD (<=)	Min. Starting Temp (°F/°C)
	2	120	70	0.59 A	0.90	99	1.7	10	0/-18
	2	277	69	0.25 A	0.90	95	1.7	10	0/-18
	1	120	42	0.36 A	1.04	99	1.7	10	0/-18
FT40W/4P	1	277	42	0.17 A	1.04	95	1.7	15	0/-18

Safety and performance UL Type 1 Outdoor UL Type HL FCC – CLASS A Non-Consumer UL Class P CSA UL Listed

75950 – GEC225MVPS-A

High-Lumen Biax® UltraStart® Programmed Start for 25W and 28W

2 or 1 – FT25W/2G11 Biax - 120-277V UltraStart® Programmed Start

- Electronic compact fluorescent ballasts for all general fluorescent applications
- Low-profile case
- Multi-Voltage technology handles voltage from 120 to 277V
- A new generation of ultra-efficient Programmed Start ballasts (> 90% efficiency)
- Parallel Lamp Operation keeps lights on when one lamp fails
- Anti-Striation Control for better light quality, with no striations
- Lamp End-of-Life Safety Shutdown Circuit with Re-Lamping Auto-reset

General characteristics

Ballast Type	Electronic – Program / Rapid Start
Starting Method	Programmed start
Lamp Wiring	Parallel
Line Voltage Regulation (+/-)	10%
Ambient Temperature (MAX)	105°F (41°C)
Case Temperature (MAX)	70 °C (158 °F)
Ballast Factor	Normal
Power Factor Correction	Active
Sound Rating	A (20-24 decibels)
Additional Info	Auto-restart, Thermally protected, Universal voltage

Electrical characteristics

Supply Current Frequency	50 Hz /60 Hz

Order information

10 Pack	Pallet Pack	DIY Pack	IP Pack
75950			

Dimensions

Wiring diagram – CFL PS2 – see example on page 17-16	
Case dimensions – Ref Drawing -A – see page 17-17	
Length (L)	9.5 in (241 mm)
Width (W)	1.7 in (43 mm)
Height (H)	1.18 in (30 mm)
Mounting dimensions	
Bracket Length (BL)	
Mount Length (M)	8.9 in (226 mm)
Mount Width (X or F)	1.18 in (30 mm)
Mount Slots (MS)	0.3 in (8 mm)
Weight	1.40 lbs
Exit Type	Side
Remote Mounting Distance to Lamp	10 ft
Remote Mounting Wire Gauge	18 AWG
Lead lengths	**Length (± 1 in)**
Black	25 in (635 mm)
Blue and Red	33 in (838 mm)
Yellow	33 in (838 mm)
White	25 in (635 mm)

Specifications by lamp and wattage

Lamp	# of Lamps	Line Volts	System Watts	Nom. Line Current	Ballast Factor	Power Factor % (>=)	Crest Factor (<=)	THD (<=)	Min. Starting Temp (°F/°C)
	2	120	62	0.53 A	1.00	99	1.7	10	0/-18
	2	277	61	0.23 A	1.00	95	1.7	10	0/-18
	1	120	40	0.33 A	1.17	99	1.7	10	0/-18
FT40W/28W/4P	1	277	40	0.15 A	1.17	95	1.7	15	0/-18
	2	120	57	0.48 A	1.00	99	1.7	10	0/-18
	2	277	56	0.21 A	1.00	95	1.7	10	0/-18
	1	120	36	0.30 A	1.22	99	1.7	10	0/-18
FT40W/25W/4P	1	277	36	0.14 A	1.22	95	1.7	15	0/-18

Safety and performance UL Type 1 Outdoor UL Type HL FCC – CLASS A Non-Consumer UL Class P CSA UL Listed

See page E-1 for warranty information.

87533 – GEM1CF13PH120

ProLine® CFL Magnetic Ballasts

1 – CFT/Q13W/GX23 Pre Heat 120 (4111H2P)

- Magnetic compact fluorescent ballast construction for all general fluorescent lighting

General characteristics

Ballast Type	Magnetic – Preheat
Starting Method	Preheat
Lamp Wiring	Series
Line Voltage Regulation (+/-)	5%
Ambient Temperature (MAX)	105°F (41°C)
Case Temperature (MAX)	90°C (194°F)
Ballast Factor	Normal
Power Factor Correction	
Sound Rating	A (20-24 decibels)
Additional Info	Thermally protected

Electrical characteristics

Supply Current Frequency	60 Hz

Order information

10 Pack	Pallet Pack	DIY Pack	IP Pack
87533			

Dimensions

Wiring diagram – CFL 21 – see example on page 17-15	
Case dimensions – Ref Drawing 2 – see page 17-17	
Length (L)	3.0 in (77 mm)
Width (W)	1.25 in (32 mm)
Height (H)	1.75 in (44 mm)
Mounting dimensions	
Bracket Length (BL)	3.0 in (77 mm)
Mount Length (M)	2.75 in (70 mm)
Mount Width (X or F)	
Mount Slots (MS)	0.2 in (6 mm)
Weight	0.62 lbs
Exit Type	Side
Remote Mounting Distance to Lamp	10 ft
Remote Mounting Wire Gauge	18 AWG
Lead lengths	**Length (± 1 in)**
Black	7 in (178 mm)
Black	9 in (229 mm)

Specifications by lamp and wattage

Lamp	# of Lamps	Line Volts	System Watts	Nom. Line Current	System Ballast Factor	Ballast Efficacy Factor	Power Factor % (>=)	Crest Factor (<=)	THD (<=)	Min. Starting Temp (°F/°C)
CFQ13W/2P	1	120	15	0.25 A	0.90	6.00	50	1.7	10	50 / 10
CFT13W/2P	1	120	15	0.25 A	0.90	6.00	50	1.7	10	50 / 10

Safety and performance

UL Type HL UL Class P cUL Listed UL Listed

See page E-1 for warranty information.

Wiring Diagrams
Compact Fluorescent Ballasts

CFL 21

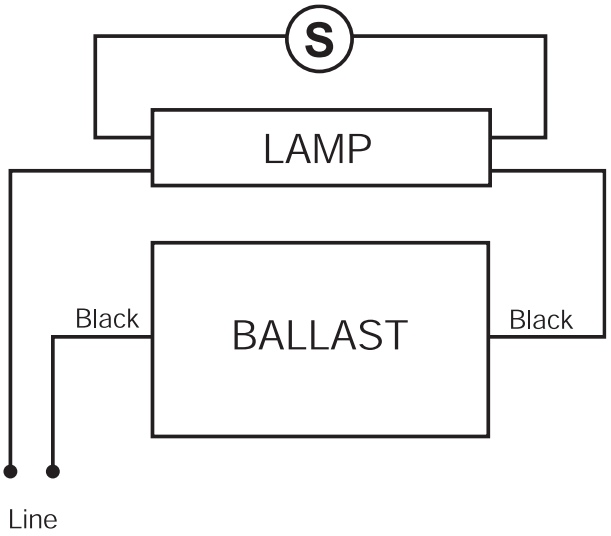

CFL 1-2

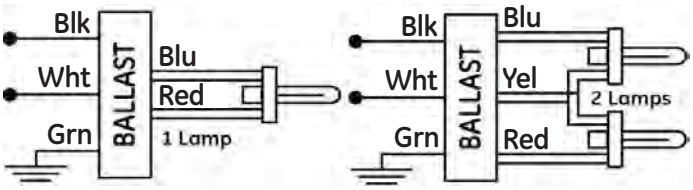

Wiring Diagrams
Compact Fluorescent Ballasts

CFL IS1

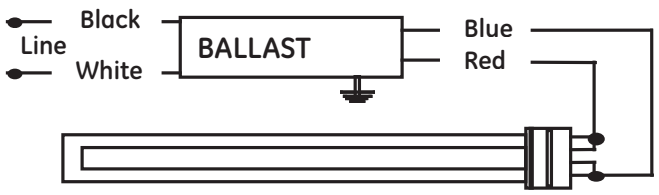

CFL IS2

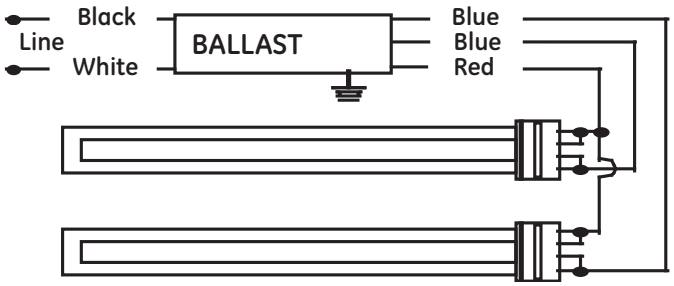

CFL IS3

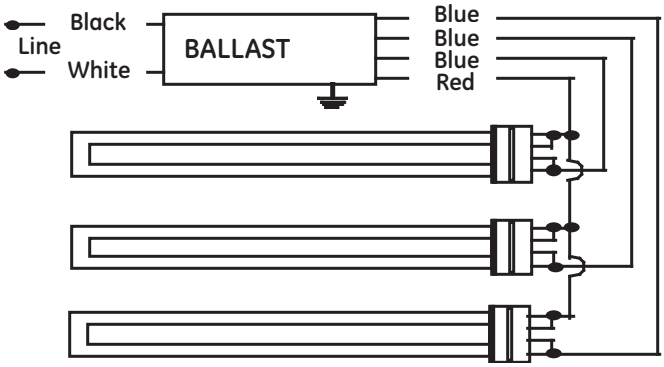

CFL PS2

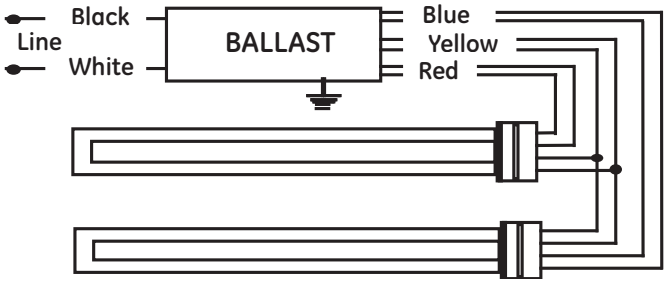

See page E-1 for warranty information.

Case Dimensions
Compact Fluorescent Ballasts

-A

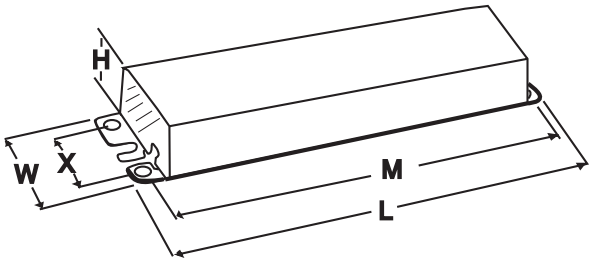

13

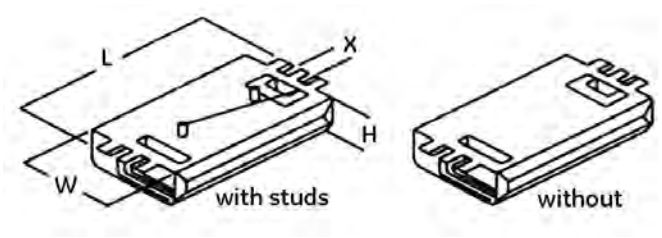

2

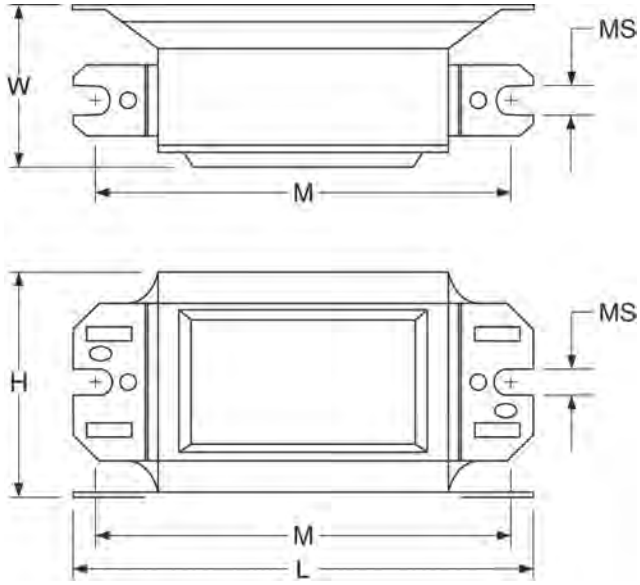

Notes

See page E-1 for warranty information.

Table of Contents
HID Electronic and Electromagnetic Ballasts

Understanding Electronic UltraMax® HID Ballasts

GE offers a complete line of electronic ballasts for HID lighting systems. Electronic HID, like ***electronic fluorescent systems that preceded it***, significantly improve the performance of HID lighting. Electronic UltraMax® eHID Ballasts use solid-state components to start and operate HID lamps. Electronic eHID ballasts use IC chips to control and give feedback for optimal performance of the lighting system. GE eHID ballasts improve the efficiency, maintain higher lumens, enhance lamp life and color control, and operate more quietly than the magnetic core and coil ballast that they replace.

GE's line of UltraCool™ UltraMax® eHID ballasts can provide up to 70% energy savings and four times the life of standard halogen. End users can meet strict watts per square foot requirements while achieving significant wattage savings and color control with ceramic metal halide lamps and GE eHID ballasts.

GE's UltraMax® eHID ballasts operate ***only pulse start and ceramic metal halide lamps***. ***GE UltraMax® eHID ballasts operate lamps at a low frequency square wave*** to maximize lamp performance. Extensive analysis of all brands of lamps suggests that the most compatible driving waveform for an electronic HID electronic ballast is a low-frequency squared wave (L.F.S.W.) with higher order harmonic content. L.F.S.W. has been established as a dependable method of ballasting low-wattage HID lamps with significant industry support. Analysis of lamp data has shown that there are limited operating bands between 1 kHz to 200 kHz in which electronic ballast could operate a lamp wattage family without causing unacceptable arc instability due to acoustic resonance. GE's UltraMax® eHID constantly measures and adjusts the wattage, optimizing the ceramic metal halide lamp performance.

GE high-wattage eHID ballasts will operate 250, 300, 320,350 or 400 watt pulse start or ceramic metal halide lamps with one ballast. The eHID Ballast with a PulseArc lamp will produce 70% more lumens per watt than the obsolete probe start magnetic core and coil system. Variable dimming to 50% power reduction is an option with GE eHID high wattage ballast.

GE Ballast HID Electronic nomenclature

G E M H 1 0 0 M S F - 1 2 0

GE Ballast
GEMH = Electronic MH

Lamp Watts

Housing
MA=Metal Housing
ML=Mini Slim
MS=Mini Square
SL=Slim Line
E=PCB board

Connector
F = Side leads w/ feet
N = Side leads no feet
J = Bottom leads w/ studs
JN = Bottom leads no studs

Voltage
120 = 120 volt
277 = 277 volt
347 = 347 volt
480 = 480 volt
MV = 120-277 volts

Pack Type
No extension = Standard
Distributor Pack
B=Bulk pack

See page E-1 for warranty information.

Understanding Electromagnetic HID Ballasts

GE offers High Intensity Discharge (HID) ballasts for mercury, probe start metal halide, pulse start metal halide and high pressure sodium lamps. Standard metal halide lamps or probe start metal halide over 150 watts, like fluorescent, are electric discharge lamps and require an open circuit voltage of nearly two times the operating voltage to the initiate the arc between the two electrodes in the arc tube. High pressure sodium, pulse start metal halide and probe start metal halide lamps 150 watts or less require an ignitor to initiate the high voltage to start the lamps. The ballasts provide the starting voltage with the igniter, where required, and provides stability for the lamp. HID lamps have negative impedance characteristics and would draw current until destruction unless a ballast was in place to regulate the current.

HID lamps take several minutes to warm-up and reach full light output. If power is interrupted between the lamp and the ballast, the arc will extinguish and lamp will go out. The lamp must cool down and reduce the vapor pressure before it will re-start. Typical warm-up and restrike times are as follows:

Light Source	Warm-Up Time	Restrike Time
Metal Halide (Probe Start)	3-4 minutes	10-20 minutes
Metal Halide (Pulse Start)	2 minutes	3-4 minutes
High Pressure Sodium	7-10 minutes	1/2-1 minute

GE HID Ballast Types

CORE AND COIL

The most common HID ballasts are the core and coil and is used in 90% of the fixture applications. Core and coil ballasts consist of one, two or three copper (or aluminum) coils on a core of electrical-grade steel laminations. HID ballasts are classified by the kind of circuit they use: Reactor (R), High Reactance autotransformer (HX), Constant Wattage Autotransformer (CWA), Regulated lag (Reg Lag) or Electronic. HID ballast are also classified as high power factor (HPF) or normal power factor (NPF).

GE HID ballast 150 watts or less have High Reactance Autotransformer circuits and high power factor (HX-HPF). GE HID ballast greater that 150 watts have Constant Wattage Autotransformer circuits and are high power factor (HPF).

CWA ballast is the most common circuit for core and coil ballast. CWA circuits provide for stable light regulation. The CWA circuit consists of a high reactance autotransformer with a capacitor in series with the lamp resulting with high power factor ballast. In most CWA ballast circuits a 10% drop in line voltage will only reduce the light output and wattage by 5%. The CWA circuit ballast requires an igniter for QMH pulse start, ceramic metal halide and HPS lamps. Igniters are also required for QMH lamps 150 watts or less.

Distributor Ballast Kits

GE stocks a comprehensive inventory of **quad and 5-tap HID voltage ballast kits**. The kits contain the appropriate core and coil, capacitor, ignitor (where required), mounting bracket, mounting hardware and instructions to allow the stocking distributor to meet the needs of their customer while minimizing their investment in component parts. The quad ballast kit has color-coded leads to identify voltages and operates at 120/208/240/277. **The 5-tap HID ballast kits also include 480-volt applications** and are listed as ML5, though GE also offers single-voltage kits for 480-volt with 120-volt taps for stand-by lighting.

Also available for metal halide and high pressure sodium applications is the **5-tap ballast-lamp replacement kit listed as -55**. This easy-to-carry, convenient, all-in-one kit, ensures ballast-lamp compatibility by including the lamp as well.

Ignitors and capacitors, where required, are included with the quad and 5-tap ballast kits.

Capacitors

Most GE capacitors and ignitors are sold in ballast kits that come pre-wired and reduce labor cost. Capacitors and ignitors are also sold separately.

Power factor capacitors are used to reduce the negative effects that inductive devices (HID ballast) have on power factor ratings. GE sells a complete line of capacitors that must be properly matched to the lamp and HID ballast. GE capacitors have bleed-in resistors and use biodegradable, nontoxic (no PCBs) dielectric fluid.

GE Oil-filled Capacitors are packaged in metal cases (up to 520V ratings). All GE capacitors are designed for 60,000 hours of continuous life.

Dry Capacitors do not contain oil and are manufactured with plastic casing. Dry casings are rated up 100°C maximum. Dry capacitors are designed and rated for AC voltages below 400V at 50 or 60Hz.

Ignitors

Ignitors are also sold in individual cartons for replacement needs. Ignitors supply a high voltage pulse to ionize the gas creating the glow discharge. Once the lamp is started the ignitor stops providing the pulse. Ignitors are designed to last thousand of hours; however, if the lamp fails or the socket is empty, the ignitor will continue to pulse. The lamps should be replaced or the fixture turned off to prevent premature failure of the ignitor.

Standard ignitors are supplied with metal halide ballast 150 watts or less, pulse start metal halide and high-pressure sodium ballast. There are several different ignitors that meet the needs of many GE lamp and ballast combinations. The appropriate ignitor is listed in the catalog under the ballast specifications.

Potted Core and Coil Ballast

GE potted core and coil ballasts are designed for applications requiring quieter or cooler operation than provided by standard coil and coil ballast. The potting material is sand-filled polyester which provides excellent sound-deadening and heat-transfer qualities.

F-Can Ballast

GE F-Can ballast is recommended for indoor applications and where ballast noise must be minimized. F-Can ballast are encased in fluorescent ballast-type cans and potted with asphalt insulating materials to minimize noise.

Ballast Date and Temperature Codes

Date Codes

GE HID core and coil ballast manufacturing date codes are located on the top end of the core. They are printed in white and indicate year, month manufactured, and order the ballast was manufactured in the month. A code of 070100001 would indicate manufacture date of 07 (year 2007), 01 (month of January), and 00001 would be the manufacturing sequence.

UL Bench Top Temperature Code

To help with UL inspection, the UL Bench top code is listed on the GE label on the core and coil ballast as 1029X. X is the temperature code and represented by the following temperature classifications: A, B, C, D, E and F.

UL Bench Top Letter Code	Temperature Range for Class H (180C) Ballast
A	Less than 75C
B	75C < 80C
C	80C < 85C
D	85C < 90C
E	90C < 95C
F	95C < 100C

GE Ballast HID Electromagnetic nomenclature

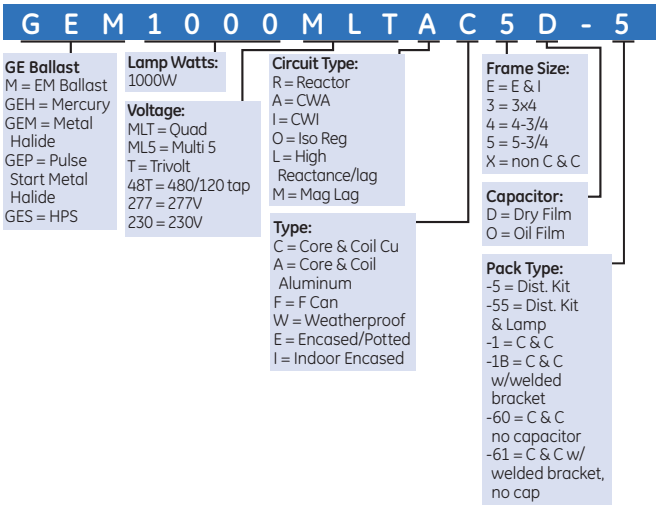

See page E-1 for warranty information.

Electronic HID

HID Electronic and Electromagnetic Ballasts For 20 – 150W Pulse Start HID Lamps

74115 – GEMH20-MC-120

Electronic HID

1 – 20W M156 or C156 120V Micro Electronic HID

- Light weight, low-profile housing
- Superior low frequency square wave frequency design maximizes performance and life of ceramic metal halide lamps.
- Ultra slim can size for fixture design flexibility

General characteristics

Ballast Type	Electronic - Low Frequency
Starting Method	Pulse Start
Line Voltage Regulation (+/-)	10 %
Ambient Temperature (MIN)	0 °C (32 °F)
Ambient Temperature (MAX)	55 °C (131 °F)
Case Temperature (MAX)	80 °C (176 °F)
Ballast Factor	Normal-High (1.0)
Power Factor Correction	Active
Circuit Type	Electronic
Sound Rating	A (20-24 decibels)
Enclosure Type	Plastic
Distance to Lamp (MAX)	8 ft
Additional Info	End of Life Protection (EOL)

Electrical characteristics

Lamp Operating Frequency	133 Hz
Supply Current Frequency	60 Hz
Supply Current Frequency (MIN)	

Order information

Type	No. Items Per Sales Unit	No. Items Per Standard Package
Case	1	10

Dimensions

Wiring diagram WD-eHID MLF/MSF – see example on page 18-65			
Case dimensions – Ref Drawing MLF – see page 18-66			
Length (L)	3.0 in (76 mm)		
Width (W)	1.3 in (33 mm)		
Height (H)	1.18 in (30 mm)		
Weight	0.292 lbs		
Exit Type	Side		
Remote Mounting Distance to Lamp	8 ft		
Remote Mounting Wire Gauge	18 AWG		
Lead lengths	**Qty**	**Exit**	**Length (± 1 in.)**
Red	1	Left	6.0 in (152 mm)
White	1	Left	6.0 in (152 mm)
Brown	1	Left	6.0 in (152 mm)
Black	1	Left	6.0 in (152 mm)

Specifications by lamp and line voltage

Lamp	Specifications by line voltage	
M156		**120**
20 W Ceramic MetalHalide	System Wattage (W)	23
	Nominal Current	0.20 A
	Ballast Factor	1
	Ballast Efficiency	0.870
	Open Circuit Voltage	4000 V
	Drop Out Voltage	96 V
	Power factor (>=)%	0.98
	Crest factor (<)	1.4
	THD % (<)	10
	Min. starting temperature	0 °F (-18 °C)
	Fuse rating	1.5

Safety and performance

UL94V0 Flame Retardant UL 1029 Listed Short Circuit Protection FCC Part 18 (Class A) for EMI and RFI Non-Consumer Limits ANSI – C82.14-2006 cUL Listed UL Listed Inherent Thermal Protection Product is compliant with material restriction requirements of RoHS

87490 – GEMH20-MLF-120

Electronic HID

1 – 20W M156 or C156 120V Electronic HID

- Light weight, low-profile housing
- Superior low-frequency square-wave-frequency design maximizes performance and life of ceramic metal halide lamps
- Ultra-slim can size for fixture design flexibility

General characteristics

Ballast Type	Electronic – Low Frequency
ANSI Lamp Codes	M156
Voltage	120
Line Voltage Regulation (+/-)	10%
Circuit Type	Electronic
Insulation Class	
Type of Capacitor	
Capacitance	
Voltage (MIN)	
Capacitor Temperature Rating	
Ambient Temperature (MAX)	131°F (55°C)
Case Temperature (MAX)	85°C (185°F)
Sound Rating	A (20-24 decibels)
Additional Info	End-of-Life Protection (EOL), Inherent thermal protection

Electrical characteristics

Lamp Operating Frequency	133 Hz
Supply Current Frequency	60 Hz/ 50 Hz/ Supply Current Frequency (MIN) / 50 Hz

Order information

Type	No. Items Per Sales Unit	No. Items Per Standard Package
Case	1	12

Dimensions

Wiring diagram WD-eHID MLF/MSF – see example on page 18-65	
Case dimensions – Ref Drawing MLF – see page 18-66	
Length (L)	3.7 in (95 mm)
Width (W)	1.5 in (40 mm)
Height (H)	1.0 in (25 mm)
Frame Size (H x L)	
Mounting dimensions	
Bracket Length (BL)	
Mount Length (M)	3.3 in (85 mm)
Mount Width (X or F)	1.1 in (30 mm)
Mount Slots (MS)	0.1 in (4 mm)
Weight	0.38 lbs
Exit Type	Side
Remote Mounting Distance to Lamp	8 ft
Remote Mounting Wire Gauge	18 AWG
Lead lengths	
Black	
Brown	
White	
Red	

Specifications by lamp and line voltage

Lamp	Specifications by line voltage	
M156		**120**
20W Ceramic Metal Halide	System Wattage (W)	22.50
	Nominal Current	0.36 A
	Ballast Factor	1
	Ballast Efficiency Factor	0.89
	Open Circuit Voltage	4,000V
	Drop Out Voltage	96V
	Power Factor (>=)%	56
	Crest Factor (<)	1.40
	THD % (<)	79
	Min. Starting Temp (°F/°C)	0 / -18
	Fuse Rating	3
	UL Bench Top Rise	

Safety and performance

ANSI – C62.41 UL 1029 Listed FCC-CLASS A Non-Consumer cUL Listed UL Listed Product is compliant with material restriction requirements of RoHS

See page E-1 for warranty information.

63042 – GEMH20-MSJ-MV

Electronic HID

1-20W M156/C156 120-277V Low frequency Electronic HID

- Superior low frequency square wave frequency design maximizes performance and life of ceramic metal halide lamps.
- Multi-Voltage Technology handles voltage from 120 to 277V
- Improves lumen maintenance vs magnetic
- Suitable for recessed use
- Lamp life 4x the life of halogen: 12K vs 3K
- 2% line regulation minimizes lamp to lamp color variation
- 15% Energy savings vs magnetic HID ballasts in retrofits
- Excellent color control with GE CMH & tight line regulation
- End-of-Lamp-Life Protection

General characteristics

Ballast Type	Electronic – Low Frequency
ANSI Lamp Codes	C156
Voltage	120 and 277
Line Voltage Regulation (+/-)	10%
Circuit Type	Electronic
Ambient Temperature (MIN)	-20°C (-4°F)
Ambient Temperature (MAX)	55°C (131°F)
Case Temperature (MAX)	90°C (194°F)
Sound Rating	A (20-24 decibels)
Enclosure Type	Metal Can
Additional Info	Junction Box Mounting Bottom Lead with Studs

Electrical characteristics

Lamp Operating Frequency	130 Hz
Supply Current Frequency	50 Hz/60 Hz

Order information

Type	No. Items Per Sales Unit	No. Items Per Standard Package
Case	10	10

Specifications by lamp and line voltage

Lamp	Specifications by line voltage		
C156		**120**	**277**
20W Ceramic Metal Halide	System Wattage (W)	23	23
	Nominal Current	0.21 A	0.09 A
	Ballast Factor	1	1
	Ballast Efficiency Factor	0.87	0.87
	Open Circuit Voltage	350 V	350 V
	Drop Out Voltage	96 V	96 V
	Power Factor (>=)%	95	95
	Crest Factor (<)	1.5	1.5
	THD % (<)	10	15
	Min. Starting Temp (°F/°C)	-20 / -29	-20 / -29
	Fuse Rating	1.25	1.25
	UL Bench Top Rise		

Dimensions

Wiring diagram WD-eHID-SLJ – see example on page 18-65			
Case dimensions – Ref Drawing Fig. 3 – see page 18-66			
Length (L)	3.3 in (83 mm)		
Width (W)	3.0 in (76 mm)		
Height (H)	1.6 in (40 mm)		
Frame Size (H x L)			
Mounting dimensions			
Bracket Length (BL)			
Mount Length (M)	2.0 in (51 mm)		
Mount Width (X or F)			
Mount Slots (MS)	8-32		
Weight	1.1 lb		
Exit Type	Bottom Leads with Studs		
Remote Mounting Distance to Lamp	6.56 ft		
Remote Mounting Wire Gauge	18 AWG		
Lead lengths	**Qty**	**Exit**	**Length (±1 in.)**
Black	1	Bottom	6.0 in (152 mm)
Brown	1	Bottom	6.0 in (152 mm)
Green	1	Bottom	6.0 in (152 mm)
Red	1	Bottom	6.0 in (152 mm)
White	1	Bottom	6.0 in (152 mm)

Safety and performance

UL Type 1 Outdoor ANSI - C82.14-2006 Suitable for recessed use UL 1029 Listed FCC Part 18 (Class A) for EMI and RFI Non-Consumer Limits Short Circuit Protection cUL Listed Inherent Thermal Protection Product is compliant with material restriction requirements of RoHS

63043 – GEMH20-MSF-MV

Electronic HID

1-20W M156/C156 120-277V Low frequency Electronic HID

- Superior low frequency square wave frequency design maximizes performance and life of ceramic metal halide lamps.
- 15% Energy savings vs magnetic HID ballasts in retrofits
- Lamp life 4x the life of halogen: 12K vs 3K
- Improves lumen maintenance vs magnetic
- 2% line regulation minimizes lamp to lamp color variation
- Excellent color control with GE CMH & tight line regulation
- End-of-Lamp-Life Protection

General characteristics

Ballast Type	Electronic – Low Frequency
ANSI Lamp Codes	C156
Voltage	120 and 277
Line Voltage Regulation (+/-)	10%
Circuit Type	Electronic
Ambient Temperature (MIN)	-20°C (-4°F)
Ambient Temperature (MAX)	55°C (131°F)
Case Temperature (MAX)	90°C (194°F)
Sound Rating	A (20-24 decibels)
Enclosure Type	Metal Can
Additional Info	Junction Box Mounting Side Leads with feet

Electrical characteristics

Lamp Operating Frequency	130 Hz
Supply Current Frequency	50 Hz/60 Hz

Order information

Type	No. Items Per Sales Unit	No. Items Per Standard Package
Case	10	10

Specifications by lamp and line voltage

Lamp	Specifications by line voltage		
C156		**120**	**277**
20W Ceramic Metal Halide	System Wattage (W)	23	23
	Nominal Current	0.21 A	0.09 A
	Ballast Factor	1	1
	Ballast Efficiency Factor	0.87	0.87
	Open Circuit Voltage	350 V	350 V
	Drop Out Voltage	96 V	96 V
	Power Factor (>=)%	95	95
	Crest Factor (<)	1.5	1.5
	THD % (<)	10	15
	Min. Starting Temp (°F/°C)	-20 / -29	-20 / -29
	Fuse Rating	1.25	1.25
	UL Bench Top Rise		

Dimensions

Wiring diagram WD-eHID SLJ – see example on page 18-65			
Case dimensions – Ref Drawing Fig. 2 – see page 18-66			
Length (L)	3.4 in (85 mm)		
Width (W)	3.1 in (79 mm)		
Height (H)	1.2 in (30 mm)		
Frame Size (H x L)			
Mounting dimensions			
Bracket Length (BL)			
Mount Length (M)	3.78 in (96 mm)		
Mount Width (X or F)	2.64 in (67 mm)		
Mount Slots (MS)	0.17 in (4 mm)		
Weight	1.0 lbs		
Exit Type	Side		
Remote Mounting Distance to Lamp	6.56 ft		
Remote Mounting Wire Gauge	18 AWG		
Lead lengths	**Qty**	**Exit**	**Length (± 1 in)**
Black	1	Bottom	6.0in (152 mm)
Brown	1	Bottom	6.0in (152 mm)
Green	1	Bottom	6.0in (152 mm)
White	1	Bottom	6.0in (152 mm)
Red	1	Bottom	6.0in (152 mm)

Safety and performance

UL Type 1 Outdoor Suitable for recessed use UL 1029 Listed Short Circuit Protection cUL Listed ANSI - C82.14-2006 FCC Part 18 Class B at 120 volts Product is compliant with material restriction requirements of RoHS

See page E-1 for warranty information.

Electronic HID

HID Electronic and Electromagnetic Ballasts For 20 – 150W Pulse Start HID Lamps

63044 – GEMH39-MSJ-MV

Electronic HID

1-39W M130/C130 120-277V Low Frequency Electronic HID

- Superior low frequency square wave frequency design maximizes performance and life of ceramic metal halide lamps.
- 15% Energy savings vs magnetic HID ballasts in retrofits
- Lamp life 4x the life of halogen: 12K vs 3K
- Improves lumen maintenance vs magnetic
- Excellent color control with GE CMH & tight line regulation
- 2% line regulation minimizes lamp to lamp color variation
- Multi-Voltage Technology handles voltage from 120 to 277V
- End-of-Lamp-Life Protection

General characteristics

Ballast Type	Electronic – Low Frequency
ANSI Lamp Codes	C156
Voltage	120 and 277
Line Voltage Regulation (+/-)	10%
Circuit Type	Electronic
Ambient Temperature (MIN)	-20°C (-4°F)
Ambient Temperature (MAX)	55°C (131°F)
Case Temperature (MAX)	90°C (194°F)
Sound Rating	A (20-24 decibels)
Enclosure Type	Metal Can
Additional Info	Junction Box Mounting Bottom Lead with studs

Electrical characteristics

Lamp Operating Frequency	130 Hz
Supply Current Frequency	50 Hz/60 Hz

Order information

Type	No. Items Per Sales Unit	No. Items Per Standard Package
Case	10	10

Dimensions

Wiring diagram WD-eHID-SLJ – see example on page 18-65			
Case dimensions – Ref Drawing Fig. 3 – see page 18-66			
Length (L)	3.3 in (83 mm)		
Width (W)	3.0 in (76 mm)		
Height (H)	1.6 in (40 mm)		
Frame Size (H x L)			
Mounting dimensions			
Bracket Length (BL)			
Mount Length (M)	2.0 in (51 mm)		
Mount Width (X or F)			
Mount Slots (MS)	8-32		
Weight	1.1 lb		
Exit Type	Bottom Leads with Studs		
Remote Mounting Distance to Lamp	6.56 ft		
Remote Mounting Wire Gauge	18 AWG		
Lead lengths	**Qty**	**Exit**	**Length (±1 in.)**
Black	1	Bottom	6.0 in (152 mm)
Brown	1	Bottom	6.0 in (152 mm)
Green	1	Bottom	6.0 in (152 mm)
Red	1	Bottom	6.0 in (152 mm)
White	1	Bottom	6.0 in (152 mm)

Specifications by lamp and line voltage

Lamp	Specifications by line voltage		
C130, M130		**120**	**277**
39W Ceramic Metal Halide	System Wattage (W)	44	45
	Nominal Current	0.17 A	0.39 A
	Ballast Factor	1	1
	Ballast Efficiency Factor	0.89	0.87
	Open Circuit Voltage	350 V	350 V
	Drop Out Voltage	96 V	96 V
	Power Factor (>=)%	95	95
	Crest Factor (<)	1.5	1.5
	THD % (<)	10	15
	Min. Starting Temp (°F/°C)	-20 / -29	-20 / -29
	Fuse Rating	1.25	1.25
	UL Bench Top Rise		

Safety and performance

UL Type 1 Outdoor ANSI - C82.14-2006 Suitable for recessed use UL 1029 Listed FCC Part 18 (Class A) for EMI and RFI Non-Consumer Limits
Short Circuit Protection Inherent Thermal Protection cUL Listed Product is compliant with material restriction requirements of RoHS

63045 – GEMH39-MSF-MV

Electronic HID

1-39W M130/C130 120-277V Low Frequency Electronic HID

- Superior low frequency square wave frequency design maximizes performance and life of ceramic metal halide lamps.
- 15% Energy savings vs magnetic HID ballasts in retrofits
- Energy saving high efficiency instant start electronic ballast (> 90%)
- Lamp life 4x the life of halogen: 12K vs 3K
- Improves lumen maintenance vs magnetic
- Excellent color control with GE CMH & tight line regulation
- 2% line regulation minimizes lamp to lamp color variation
- Remote mounting distance to lamp = 2 m (min 18 AWG)
- Multi-Voltage Technology handles voltage from 120 to 277V
- End-of-Lamp-Life Protection
- UL940V0 flame retardant plastic housing

General characteristics

Ballast Type	Electronic – Low Frequency
ANSI Lamp Codes	C156
Voltage	120 and 277
Line Voltage Regulation (+/-)	10%
Circuit Type	Electronic
Ambient Temperature (MIN)	-20°C (-4°F)
Ambient Temperature (MAX)	55°C (131°F)
Case Temperature (MAX)	90°C (194°F)
Sound Rating	A (20-24 decibels)
Enclosure Type	Metal Can
Additional Info	Junction Box Mounting Bottom Lead with feet

Electrical characteristics

Lamp Operating Frequency	130 Hz
Supply Current Frequency	50 Hz/60 Hz

Order information

Type	No. Items Per Sales Unit	No. Items Per Standard Package
Case	10	10

Dimensions

Wiring diagram WD-eHID SLJ – see example on page 18-65			
Case dimensions – Ref Drawing Fig. 2– see page 18-66			
Length (L)	3.4 in (85 mm)		
Width (W)	3.1 in (79 mm)		
Height (H)	1.2 in (30 mm)		
Frame Size (H x L)			
Mounting dimensions			
Bracket Length (BL)			
Mount Length (M)	3.78 in (96 mm)		
Mount Width (X or F)	2.64 in (67 mm)		
Mount Slots (MS)	0.17 in (4 mm)		
Weight	1.0 lbs		
Exit Type	Side		
Remote Mounting Distance to Lamp	6.56 ft		
Remote Mounting Wire Gauge	18 AWG		
Lead lengths	**Qty**	**Exit**	**Length (± 1 in)**
Black	1	Bottom	6.0in (152 mm)
Brown	1	Bottom	6.0in (152 mm)
Green	1	Bottom	6.0in (152 mm)
White	1	Bottom	6.0in (152 mm)
Red	1	Bottom	6.0in (152 mm)

Specifications by lamp and line voltage

Lamp	Specifications by line voltage		
C130, M130		**120**	**277**
39W Ceramic Metal Halide	System Wattage (W)	44	45
	Nominal Current	0.17 A	0.39 A
	Ballast Factor	1	1
	Ballast Efficiency Factor	0.89	0.87
	Open Circuit Voltage	350 V	350 V
	Drop Out Voltage	96 V	96 V
	Power Factor (>=)%	95	95
	Crest Factor (<)	1.5	1.5
	THD % (<)	10	15
	Min. Starting Temp (°F/°C)	-20 / -29	-20 / -29
	Fuse Rating	1.25	1.25
	UL Bench Top Rise		

Safety and performance

Product is compliant with material restriction requirements of RoHS UL Type 1 Outdoor ANSI - C82.14-2006 Suitable for recessed use UL 1029 Listed cUL Listed
Short Circuit Protection Inherent Thermal Protection FCC Part 18 (Class A) for EMI and RFI Non-Consumer Limits

See page E-1 for warranty information.

74116– GEMH39-MC-120

Electronic HID

1 – 39W M130 or C130 120V Micro Electronic HID

- Light weight, low-profile housing
- Superior low frequency square wave frequency design maximizes performance and life of ceramic metal halide lamps.
- Ultra slim can size for fixture design flexibility

General characteristics

Ballast Type	Electronic - Low Frequency
Starting Method	n/a
Line Voltage Regulation (+/-)	10 %
Ambient Temperature (MIN)	0 °C (32 °F)
Ambient Temperature (MAX)	
Case Temperature (MAX)	80 °C (176 °F)
Ballast Factor	Normal-High (1.0)
Sound Rating	A (20-24 decibels)
Enclosure Type	Plastic
Distance to Lamp (MAX)	8 ft
Additional Info	End of Life Protection (EOL), Thermally protected

Electrical characteristics

Lamp Operating Frequency	133 Hz

Order information

Type	No. Items Per Sales Unit	No. Items Per Standard Package
Case	1	10

Dimensions

Wiring diagram WD-eHID MLF/MSF – see example on page 18-65
Case dimensions – Ref Drawing MLF – see page 18-66

Length (L)	3.0 in (76 mm)		
Width (W)	1.3 in (33 mm)		
Height (H)	1.18 in (30 mm)		
Weight	0.38 lbs		
Exit Type	Side		
Remote Mounting Distance to Lamp	8 ft		
Remote Mounting Wire Gauge	18 AWG		
Lead lengths	**Qty**	**Exit**	**Length (± 1 in.)**
White	1	Left	6.0 in (152 mm)
Red	1	Left	6.0 in (152 mm)
Brown	1	Left	6.0 in (152 mm)
Black	1	Left	6.0 in (152 mm)

Specifications by lamp and line voltage

Lamp	Specifications by line voltage	
M130		**120**
39 W Ceramic MetalHalide	System Wattage (W)	43
	Ballast Factor	1
	Ballast Efficiency	0.907
	Max Input Current	0.39 A
	Open Circuit Voltage	4000 V
	Drop Out Voltage	96 V
	Power factor (>=) %	0.98
	Crest factor (<)	1.4
	THD % (<)	10
	Min. starting temperature	0 °F (-18 °C)
	Fuse rating	1.5

Safety and performance

UL94V0 Flame Retardant Short Circuit Protection ANSI – C82.14-2006 cUL Listed Inherent Thermal Protection UL Listed
Product is compliant with material restriction requirements of RoHS

Note: This product no longer manufactured. Remaining stock will be sold.

75378 – GEMH39-MCM-120

Electronic HID

1 – 39W M130 or C130 120V Micro Electronic HID Metal Can

- Light weight, low-profile housing
- Superior low frequency square wave frequency design maximizes performance and life of ceramic metal halide lamps.
- Ultra slim can size for fixture design flexibility

General characteristics

Ballast Type	Electronic - Low Frequency
Line Voltage Regulation (+/-)	10 %
Ambient Temperature (MAX)	55 °C (131 °F)
Case Temperature (MAX)	80 °C (176 °F)
Ballast Factor	Normal-High (1.0)
Sound Rating	A (20-24 decibels)
Enclosure Type	Metal
Distance to Lamp (MAX)	8 ft
Additional Info	End of Life Protection (EOL)

Electrical characteristics

Lamp Operating Frequency	130 Hz

Order information

Type	No. Items Per Sales Unit	No. Items Per Standard Package
Case	1	10

Dimensions

Wiring diagram WD-eHID MLF/MSF – see example on page 18-65
Case dimensions – Ref Drawing MLF – see page 18-66

Length (L)	3.5 in (90 mm)		
Width (W)	1.3 in (33 mm)		
Height (H)	1.18 in (30 mm)		
Weight	0.38 lbs		
Exit Type	Side		
Remote Mounting Distance to Lamp	8 ft		
Remote Mounting Wire Gauge	18 AWG		
Lead lengths	**Qty**	**Exit**	**Length (± 1 in.)**
Green	1	Left	6.0 in (152 mm)
White	1	Left	6.0 in (152 mm)
Red	1	Left	6.0 in (152 mm)
Brown	1	Left	6.0 in (152 mm)
Black	1	Left	6.0 in (152 mm)

Specifications by lamp and line voltage

Lamp	Specifications by line voltage	
M130		**120**
20 W Ceramic MetalHalide	System Wattage (W)	43
	Nominal Curren	0.39 A
	Ballast Factor	1
	Ballast Efficiency	0.907
	Open Circuit Voltage	4000 V
	Drop Out Voltage	96 V
	Power factor (>=) %	0.95
	Crest factor (<)	1.4
	THD % (<)	10
	Min. starting temperature	0 °F (-18 °C)
	Fuse rating	1.5

Safety and performance

UL Type 1 Outdoor UL1029 Listed Short Circuit Protection ANSI – C82.14-2006 cUL Listed Inherent Thermal Protection UL Listed
Product is compliant with material restriction requirements of RoHS

See page E-1 for warranty information.

Electronic HID

HID Electronic and Electromagnetic Ballasts For 20 – 150W Pulse Start HID Lamps

87501 – GEMH39-MSF-120

Electronic HID

1 – 39W M130 or C130 120V Electronic HID

General characteristics

Ballast Type	Electronic – Low Frequency
ANSI Lamp Codes	M130
Voltage	120
Line Voltage Regulation (+/-)	10%
Circuit Type	
Insulation Class	
Type of Capacitor	
Capacitance	
Voltage (MIN)	
Capacitor Temperature Rating	
Ambient Temperature (MAX)	131°F (55°C)
Case Temperature (MAX)	90 °C (194 °F)
Sound Rating	A (20-24 decibels)
Additional Info	End-of-Life Protection (EOL), Thermally protected

Electrical characteristics

Lamp Operating Frequency	130 Hz

Order information

Type	No. Items Per Sales Unit	No. Items Per Standard Package
Case	1	10

Specifications by lamp and line voltage

Lamp	Specifications by line voltage	
M130		**120**
39W Ceramic Metal Halide	System Wattage (W)	43.00
	Nominal Current	0.37 A
	Ballast Factor	1.00
	Ballast Efficiency Factor	0.91
	Open Circuit Voltage	
	Drop Out Voltage	96V
	Power Factor (>=)%	99
	Crest Factor (<)	1.40
	THD % (<)	6.80
	Min. Starting Temp (°F/°C)	-4 / -20
	Fuse Rating	3
	UL Bench Top Rise	

Dimensions

Wiring diagram WD-eHID MLF/MSF – see example on page 18-65	
Case dimensions – Ref Drawing MSF – see page 18-66	
Length (L)	3.7 in (95 mm)
Width (W)	2.9 in (76 mm)
Height (H)	1.18 in (30 mm)
Frame Size (H x L)	
Mounting dimensions	
Bracket Length (BL)	
Mount Length (M)	3.3 in (86 mm)
Mount Width (X or F)	2.5 in (64 mm)
Mount Slots (MS)	0.1 in (4 mm)
Weight	0.38 lbs
Exit Type	Side
Remote Mounting Distance to Lamp	8 ft
Remote Mounting Wire Gauge	18 AWG
Lead lengths	
Black	
Brown	
White	
Red	

Safety and performance

UL Type 1 Outdoor ANSI – C62.41 Suitable for recessed use UL 1029 Listed cUL Listed UL Listed Product is compliant with material restriction requirements of RoHS

Note: This product is no longer manufactured. Remaining stock will be sold.

87531 – GEMH70-MSF-120

Electronic HID

1 – 70W, M98, M/C143, 120V Electronic HID

General characteristics

Ballast Type	Electronic – Low Frequency
ANSI Lamp Codes	M98, M143, M139, C143, C139
Voltage	120
Line Voltage Regulation (+/-)	10%
Circuit Type	
Insulation Class	
Type of Capacitor	
Capacitance	
Voltage (MIN)	
Capacitor Temperature Rating	
Ambient Temperature (MAX)	131°F (55°C)
Case Temperature (MAX)	90°C (194°F)
Sound Rating	A (20-24 decibels)
Additional Info	End of Life Protection (EOL), Thermally protected

Electrical characteristics

Lamp Operating Frequency	130 Hz

Order information

Type	No. Items Per Sales Unit	No. Items Per Standard Package
Case	1	10

Specifications by lamp and line voltage

Lamp	Specifications by line voltage	
M98, M143, M139, C143, C139		**120**
70W Ceramic Metal Halide	System Wattage (W)	77
	Nominal Current	0.68 A
	Ballast Factor	1.00
	Ballast Efficiency Factor	0.91
70W Quartz Metal Halide	Open Circuit Voltage	
	Drop Out Voltage	
	Power Factor (>=)%	99
	Crest Factor (<)	1.4
	THD % (<)	8.3
	Min. Starting Temp (°F/°C)	-4 / -20
	Fuse Rating	3
	UL Bench Top Rise	

Dimensions

Wiring diagram WD-eHID MLF/MSF – see example on page 18-65			
Case dimensions – Ref Drawing MSF – see page 18-66			
Length (L)	3.7 in (95 mm)		
Width (W)	2.9 in (76 mm)		
Height (H)	1.18 in (30 mm)		
Frame Size (H x L)			
Mounting dimensions			
Bracket Length (BL)			
Mount Length (M)	3.3 in (86 mm)		
Mount Width (X or F)	2.5 in (64 mm)		
Mount Slots (MS)	0.1 in (4 mm)		
Weight	0.38 lbs		
Exit Type	Side		
Remote Mounting Distance to Lamp	8 ft		
Remote Mounting Wire Gauge	18 AWG		
Lead lengths	**Qty**	**Exit**	**Length (± 1 in)**
Black	1	Left	10 in (254 mm)
Brown	1	Right	10 in (254 mm)
White	1	Left	10 in (254 mm)
Red	1	Right	10 in (254 mm)

Safety and performance

Housing meets UL94V0 flame retardant UL Type 1 Outdoor ANSI – C62.41 UL 1029 Listed FCC-CLASS A Non-Consumer cUL Listed UL Listed

Product is compliant with material restriction requirements of RoHS

See page E-1 for warranty information.

94135 -GEMH70-MSLF-120

Electronic HID

1 - 70W, M98/C98, M139/C139, 120V Electronic HID

General characteristics

Ballast Type	Electronic – Low Frequency
ANSI Lamp Codes	M98/C98 or M139/C139
Line Voltage Regulation (+/-)	10%
Ambient Temperature (MAX)	122°F (50°C)
Case Temperature (MAX)	90°C (194°F)
Sound Rating	A (<24 decibels)
Enclosure Type	Metal
Distance to Lamp (MAX)	8 ft
Additional Info	End of Life Protection (EOL) / Thermally protected

Electrical characteristics

Lamp Operating Frequency	275 Hz

Order information

Type	No. Items Per Sales Unit	No. Items Per Standard Package
Case	1	10

Specifications by lamp and line voltage

Lamp	Specifications by Line Voltage	
M98/C98		**120**
	System Wattage (W)	77
	Nominal Current	0.64 A
	Ballast Factor	1
	Ballast Efficiency	0.90
	Power factor (>=) %	95
	Crest factor (<)	1.5
	THD % (<)	10
	Min. Starting Temp (°F/°C)	5/-15
	Fuse rating	2.5A
M139/C139		**120**
	System Wattage (W)	77
	Nominal Current	0.64 A
	Ballast Factor	1
	Ballast Efficiency	0.90
	Power factor (>=) %	95
	Crest factor (<)	1.5
	THD % (<)	10
	Min. Starting Temp (°F/°C)	5/-15
	Fuse rating	2.5A

Dimensions

Wiring diagram WD-eHID SLJ – see example on page 18-65		
Case dimensions – Ref Drawing SLJ – see page 18-66		
Length (L)	5.51 in (140 mm)	
Width (W)	1.74 in (44.2 mm)	
Height (H)	1.18 in (30 mm)	
Frame Size (H x L)		
Mounting dimensions		
Bracket Length (BL)		
Mount Length (M)	5.24 in (133 mm)	
Mount Width (X or F)	1.13 in (28.6 mm)	
Mount Slots (MS)	0.19 in (4.8 mm)	
Weight	0.56 lbs	
Exit Type	Side	
Remote Mounting Distance to Lamp	8 ft	
Remote Mounting Wire Gauge	18 AWG	
Lead lengths	**Qty**	**Length (± 1 in)**
White	1	10 in (254 mm)
Black	1	10 in (254 mm)
Green	1	10 in (254 mm)
Red	1	10 in (254 mm)
Brown	1	10 in (254 mm)

Safety and performance

UL 1029 Listed cUL Listed Housing meets UL 1439 Suitable for recessed use Product is compliant with material restriction requirements of RoHS

87546 – GEMH70-SLJ-MV

Electronic HID

1 – 70W, M98, M/C143, 120V Electronic HID

General characteristics

Ballast Type	Electronic – Low Frequency
ANSI Lamp Codes	M98, M143, C143, M139, C139
Voltage	120/277
Line Voltage Regulation (+/-)	10%
Ambient Temperature (MAX)	131°F (55°C)
Case Temperature (MAX)	90°C (194°F)
Sound Rating	A (20-24 decibels)
Additional Info	End of Life Protection (EOL), Thermally protected

Electrical characteristics

Lamp Operating Frequency	130 Hz

Order information

Type	No. Items Per Sales Unit	No. Items Per Standard Package
Case	1	10

Specifications by lamp and line voltage

Lamp	Specifications by Line Voltage		
M98, M143, M139, C143, C139		**120**	**277**
70W Ceramic Metal Halide	System Wattage (W)	77	77
	Nominal Current	0.66 A	0.30 A
	Ballast Factor	1	1
	Ballast Efficiency Factor	0.91	0.91
70W Quartz Metal Halide	Open Circuit Voltage		
	Drop Out Voltage	96V	96V
	Power Factor (>=)%	99	97
Pulse Arc	Crest Factor (<)	1.4	1.4
	THD % (<)	4.9	7.7
	Min. Starting Temp (°F/°C)	-4 / -20	-4 / -20
	Fuse Rating	3	3
	UL Bench Top Rise		

Dimensions

Wiring diagram WD-eHID SLJ – see example on page 18-65			
Case dimensions – Ref Drawing SLJ – see page 18-66			
Length (L)	7.2 in (185 mm)		
Width (W)	2.5 in (66 mm)		
Height (H)	2.2 in (56 mm)		
Frame Size (H x L)			
Mounting dimensions			
Bracket Length (BL)			
Mount Length (M)	0.4 in (11 mm)		
Mount Width (X or F)			
Mount Slots (MS)			
Weight	0.38 lbs		
Exit Type	Bottom Leads with Studs		
Remote Mounting Distance to Lamp	8 ft		
Remote Mounting Wire Gauge	18 AWG		
Lead lengths	**Qty**	**Exit**	**Length (± 1 in)**
Black	1	Left	10 in (254 mm)
Brown	1	Right	10 in (254 mm)
White	1	Left	10 in (254 mm)
Red	1	Right	10 in (254 mm)

Safety and performance

UL Type 1 Outdoor ANSI – C62.41 UL 1029 Listed FCC-CLASS A Non-Consumer cUL Listed Product is compliant with material restriction requirements of RoHS

See page E-1 for warranty information.

Electronic HID

HID Electronic and Electromagnetic Ballasts For 20 – 150W Pulse Start HID Lamps

87561 – GEMH100-SLJ-MV

Electronic HID

1 – 100W, M90, M/C140, 120V-277V Electronic HID

General characteristics

Ballast Type	Electronic – Low Frequency
ANSI Lamp Codes	M90, M140, C140
Voltage	120/277
Line Voltage Regulation (+/-)	10%
Ambient Temperature (MAX)	131°F (55°C)
Case Temperature (MAX)	90°C (194°F)
Sound Rating	A (20-24 decibels)
Additional Info	End of Life Protection (EOL), Thermally protected

Electrical characteristics

Lamp Operating Frequency	130 Hz

Order information

Type	No. Items Per Sales Unit	No. Items Per Standard Package
Case	1	10

Dimensions

Wiring diagram WD - eHID SLJ – see example on page 18-65			
Case dimensions – Ref Drawing SLJ – see page 18-66			
Length (L)	7.2 in (185 mm)		
Width (W)	2.5 in (66 mm)		
Height (H)	2.2 in (56 mm)		
Frame Size (H x L)			
Mounting dimensions			
Bracket Length (BL)			
Mount Length (M)	0.4 in (11 mm)		
Mount Width (X or F)			
Mount Slots (MS)			
Weight	0.38 lbs		
Exit Type	Bottom Leads with Studs		
Remote Mounting Distance to Lamp	8 ft		
Remote Mounting Wire Gauge	18 AWG		
Lead lengths	**Qty**	**Exit**	**Length (± 1 in)**
Black	1	Left	10 in (254 mm)
Brown	1	Right	10 in (254 mm)
White	1	Left	10 in (254 mm)
Red	1	Right	10 in (254 mm)

Specifications by lamp and line voltage

Lamp	Specifications by line voltage	120	277	Lamp	Specifications by line voltage	120	277
M90, M140				**C140**			
100W Ceramic Metal Halide	System Wattage (W)	110	107		System Wattage (W)	110	107
	Nominal Current	0.93 A	0.41 A		Nominal Current	0.93 A	0.41 A
	Ballast Factor	1	1		Ballast Factor	1	1
100W Quartz Metal Halide	Ballast Efficiency Factor	0.91	0.93		Ballast Efficiency Factor		
	Open Circuit Voltage				Open Circuit Voltage		
	Drop Out Voltage	96V	96V		Drop Out Voltage	96V	96V
	Power Factor (>=)%	99	98		Power Factor (>=)%	99	98
	Crest Factor (<)	1.4	1.4		Crest Factor (<)	1.4	1.4
	THD % (<)	4.7	7.8		THD % (<)	4.7	7.8
	Min. Starting Temp (°F/°C)	-4 / -20	-4 / -20		Min. Starting Temp (°F/°C)	0 / -18	0 / -18
	Fuse Rating	3	3		Fuse Rating	3	3
	UL Bench Top Rise				UL Bench Top Rise		

Safety and performance UL Type 1 Outdoor ANSI – C62.41 UL 1029 Listed cUL Listed Product is compliant with material restriction requirements of RoHS

87576 – GEMH150-SLJ-MV

Electronic HID

1 – 150W, M102, M/C142, 120V-277V Electronic HID

General characteristics

Ballast Type	Electronic – Low Frequency
ANSI Lamp Codes	M142, M102, C142
Voltage	120/277
Line Voltage Regulation (+/-)	10%
Ambient Temperature (MAX)	131°F (55°C)
Case Temperature (MAX)	85°C (185°F)
Sound Rating	A (20-24 decibels)
Additional Info	End of Life Protection (EOL), Thermally protected

Electrical characteristics

Lamp Operating Frequency	130 Hz

Order information

Type	No. Items Per Sales Unit	No. Items Per Standard Package
Case	1	10

Dimensions

Wiring diagram WD-eHID SLJ – see example on page 18-65			
Case dimensions – Ref Drawing SLJ – see page 18-66			
Length (L)	7.2 in (185 mm)		
Width (W)	2.5 in (66 mm)		
Height (H)	2.2 in (56 mm)		
Frame Size (H x L)			
Mounting dimensions			
Bracket Length (BL)			
Mount Length (M)	0.4 in (11 mm)		
Mount Width (X or F)			
Mount Slots (MS)			
Weight	0.38 lbs		
Exit Type	Bottom Leads with Studs		
Remote Mounting Distance to Lamp	8 ft		
Remote Mounting Wire Gauge	18 AWG		
Lead lengths	**Qty**	**Exit**	**Length (± 1 in)**
Black	1	Left	10 in (254 mm)
Brown	1	Right	10 in (254 mm)
White	1	Left	10 in (254 mm)
Red	1	Right	10 in (254 mm)

Specifications by lamp and line voltage

Lamp	Specifications by line voltage	120	277	Lamp	Specifications by line voltage	120	277
M102, M142				**C142**			
150W Quartz Metal Halide,	System Wattage (W)	167	164		System Wattage (W)	167	164
	Nominal Current	1.44 A	0.62 A		Nominal Current	1.44 A	0.62 A
	Ballast Factor	1	1		Ballast Factor	1	1
150W Ceramic Metal Halide	Ballast Efficiency Factor	0.90	0.91		Ballast Efficiency Factor		
	Open Circuit Voltage				Open Circuit Voltage		
	Drop Out Voltage	96V	96V		Drop Out Voltage	96V	96V
	Power Factor (>=)%	99	99		Power Factor (>=)%	99	99
	Crest Factor (<)	1.4	1.4		Crest Factor (<)	1.4	1.4
	THD % (<)	4.2	10.6		THD % (<)	4.2	10.6
	Min. Starting Temp (°F/°C)	-4 / -20	-4 / -20		Min. Starting Temp (°F/°C)	0 / -18	0 / -18
	Fuse Rating	3	3		Fuse Rating	3	3
	UL Bench Top Rise				UL Bench Top Rise		

Safety and performance UL Type 1 Outdoor ANSI – C62.41 UL 1029 Listed FCC-CLASS A Non-Consumer cUL Listed Product is compliant with material restriction requirements of RoHS

See page E-1 for warranty information.

86824 – GEM50MLTLC3D-5

Metal Halide

1 – 50W MH M110 or M148 Quad (120/208/240/277V)

- Magnetic ballast construction ideal for a wide variety of lighting applications
- Precision-wound coils, ensuring even heat dissipation and the highest electrical integrity
- Distributor replacement kit contains the appropriate core and coil with color coded leads, a properly rated capacitor and ignitor (if required) and all other components required for ballast replacement
- Quad ballast (120, 208, 240, 277)

General characteristics

Ballast Type	Magnetic – Core and Coil
ANSI Lamp Codes	M110 or M148
Voltage	120/208/240/277
Line Voltage Regulation (+/-)	5%
Circuit Type	HX-HPF
Insulation Class	180C
Type of Capacitor	Dry film
Capacitance	6 Mfd GECAP-6/280V-D
Voltage (MIN)	280
Capacitor Temperature Rating	100°C (212°F)
GE Igniter	MH350-1A
Sound Rating	
Additional Info	

Dimensions

Wiring diagram HID W-(H) – see example on page 18-68	
Case dimensions – Ref Drawing PC1 – see page 18-71	
Length (L)	5.25 in (133 mm)
Width (W)	1.25 in (32 mm)
Mounting dimensions	
Mount Length (M)	4.6 in (117 mm)
Mount Width (X or F)	
Mount Slots (MS)	0.25 in (6 mm)
A	1.0
B	2.0
Weight	3.40 lbs
Exit Type	Side
Nominal Length	2.7 in (69 mm)
Frame Size (H x L)	2.813 in x 3.939 in

Electrical characteristics

Supply Current Frequency	60 Hz

Order information

Type	No. Items Per Sales Unit	No. Items Per Standard Package
Distributor Kit	1	6

Specifications by lamp and line voltage

Lamp	Specifications by line voltage				
M110, M148		**120**	**208**	**240**	**277**
50W Quartz Metal Halide	System Wattage (W)	61	61	61	61
	Nominal Current	0.60 A	0.30 A	0.30 A	0.20 A
	Ballast Factor	1	1	1	1
	Ballast Efficiency Factor	0.82	0.82	0.82	0.82
	Max Input Current	1.16 A	0.67 A	0.58 A	0.50 A
	Starting Current	0.61 A	0.34 A	0.30 A	0.26 A
	Open Circuit Voltage	264V	264V	264V	264V
	Drop Out Voltage	96V	166V	192V	222V
	Power Factor (>=)%	90	90	90	90
	Min. Starting Temp (°F/°C)	-22 / -30	-22 / -30	-22 / -30	-22 / -30
	Fuse Rating	3	3	2	2
	UL Bench Top Rise	C	C	C	C

Safety and performance cUL Listed UL Listed

86847 – GEM70MLTLC3D-5

Metal Halide

1 – 70W MH M98 or M143 Quad (120/208/240/277V)

- Magnetic ballast construction ideal for a wide variety of lighting applications
- Precision-wound coils, ensuring even heat dissipation and the highest electrical integrity
- Distributor replacement kit contains the appropriate core and coil with color coded leads, a properly rated capacitor and ignitor (if required) and all other components required for ballast replacement
- Quad ballast (120, 208, 240, 277)

General characteristics

Ballast Type	Magnetic – Core and Coil
ANSI Lamp Codes	M98 or M143
Voltage	120/208/240/277
Line Voltage Regulation (+/-)	5%
Circuit Type	HX-HPF
Insulation Class	180C
Type of Capacitor	Dry film
Capacitance	8 Mfd GECAP-8/280V-D
Voltage (MIN)	280
Capacitor Temperature Rating	100°C (212°F)
GE Igniter	MH350-1A
Sound Rating	
Additional Info	

Dimensions

Wiring diagram HID W-(H) – see example on page 18-68	
Case dimensions – Ref Drawing PC1 – see page 18-71	
Length (L)	5.25 in (133 mm)
Width (W)	1.25 in (32 mm)
Mounting dimensions	
Mount Length (M)	4.6 in (117 mm)
Mount Width (X or F)	
Mount Slots (MS)	0.25 in (6 mm)
A	2.0
B	3.0
Weight	5.00 lbs
Exit Type	Side
Nominal Length	2.7 in (69 mm)
Frame Size (H x L)	2.813 in x 3.939 in

Electrical characteristics

Supply Current Frequency	60 Hz

Order information

Type	No. Items Per Sales Unit	No. Items Per Standard Package
Distributor Kit	1	6

Specifications by lamp and line voltage

Lamp	Specifications by line voltage				
M98, M143		**120**	**208**	**240**	**277**
70W Ceramic Metal Halide	System Wattage (W)	88	88	88	88
	Nominal Current	0.90 A	0.50 A	0.40 A	0.40 A
70W Quartz Metal Halide	Ballast Factor	1	1	1	1
	Ballast Efficiency Factor	0.80	0.80	0.80	0.80
	Max Input Current	1.51 A	0.88 A	0.75 A	0.66 A
	Starting Current	0.96 A	0.59 A	0.49 A	0.44 A
	Open Circuit Voltage	257V	257V	257V	257V
	Drop Out Voltage	96V	166V	192V	222V
	Power Factor (>=)%	90	90	90	90
	Min. Starting Temp (°F/°C)	-22 / -30	-22 / -30	-22 / -30	-22 / -30
	Fuse Rating	4	3	3	2
	UL Bench Top Rise	A	A	A	A

Safety and performance cUL Listed UL Listed

See page E-1 for warranty information.

Metal Halide

HID Electronic and Electromagnetic Ballasts For 20 – 175W Metal Halide HID Lamps

78517 – GEM70TRILC3-5

Metal Halide

1 – 70W M143 Tri Tap (120/277/347V)

- Magnetic ballast construction ideal for a wide variety of lighting applications
- Precision-wound coils, ensuring even heat dissipation and the highest electrical integrity
- Distributor replacement kit contains the appropriate core and coil with color coded leads, a properly rated capacitor and ignitor (if required) and all other components required for ballast replacement
- Tri Tap ballast (120/277/347)

General characteristics

Ballast Type	Magnetic – Core and Coil
ANSI Lamp Codes	M143
Voltage	120/277/347
Line Voltage Regulation (+/-)	5%
Circuit Type	HX-HPF
Insulation Class	Class N, 200C
Type of Capacitor	Dry film
Capacitance	8 Mfd GECAP-8/280V-D
Voltage (MIN)	300
Capacitor Temperature Rating	105°C (221°F)
GE Igniter	MH350-1A
Sound Rating	
Additional Info	

Dimensions

Wiring diagram HID W-(L) – see example on page 18-69	
Case dimensions – Ref Drawing PC1 – see page 18-71	
Length (L)	5.25 in (133 mm)
Width (W)	1.25 in (32 mm)
Mounting dimensions	
Mount Length (M)	
Mount Width (X or F)	
Mount Slots (MS)	
A	1.50 in (38 mm)
B	2.95 in (75 mm)
Weight	5.00 lbs
Exit Type	Side
Nominal Length	3.54 in (90 mm)
Frame Size (H x L)	2.82 in (72 mm) x 3.94 in (101 mm)

Electrical characteristics

Supply Current Frequency	50 Hz/60 Hz

Order information

Type	No. Items Per Sales Unit	No. Items Per Standard Package
Distributor Kit	1	6

Specifications by lamp and line voltage

Lamp	Specifications by line voltage			
M143		**120**	**277**	**347**
	System Wattage (W)	91	91	91
	Nominal Current	0.90A	0.39A	0.31A
	Ballast Factor	1	1	1
	Ballast Efficiency Factor	0.77	0.77	0.77
	Max Input Current	1.00 A	0.43 A	0.34 A
	Starting Current	1.10 A	1.10 A	1.10 A
	Open Circuit Voltage	230V	230V	230V
	Drop Out Voltage	102V	235V	295V
	Power Factor (>=)%	90	90	90
	Min. Starting Temp (°F/°C)	-40 / -40	-40 / -40	-40 / -40
	Fuse Rating	3	1	1
	UL Bench Top Rise	A	A	A

Safety and performance cUL Listed UL Listed

67337 – GEM7048TLA3D-5/2

Metal Halide

1 – 70W MH M98 or M143 480

- Magnetic ballast construction ideal for a wide variety of lighting applications
- Precision-wound coils, ensuring even heat dissipation and the highest electrical integrity
- Distributor replacement kit contains the appropriate core and coil with color coded leads, a properly rated capacitor and ignitor (if required) and all other components required for ballast replacement

General characteristics

Ballast Type	Magnetic – Core and Coil
ANSI Lamp Codes	M98 or M143
Voltage	480
Line Voltage Regulation (+/-)	5%
Circuit Type	HX-HPF
Insulation Class	Class H, 180°C or Class N, 200°C
Type of Capacitor	Dry film
Capacitance	8 Mfd GECAP-8/280V-D
Voltage (MIN)	300
Capacitor Temperature Rating	100°C (212°F)
GE Igniter	MH350-1A
Sound Rating	
Additional Info	

Dimensions

Wiring diagram HID W-(F) – see example on page 18-68	
Case dimensions – Ref Drawing PC1 – see page 18-67	
Length (L)	5.25 in (133 mm)
Width (W)	1.25 in (32 mm)
Mounting dimensions	
Mount Length (M)	4.6 in (117 mm)
Mount Width (X or F)	
Mount Slots (MS)	0.25 in (6 mm)
A	1.50
B	2.60
Weight	4.80 lbs
Exit Type	Side
Nominal Length	2.7 in (69 mm)
Frame Size (H x L)	2.813 in x 3.939 in

Electrical characteristics

Supply Current Frequency	60 Hz

Order information

Type	No. Items Per Sales Unit	No. Items Per Standard Package
Distributor Kit	1	6

Specifications by lamp and line voltage

Lamp	Specifications by line voltage	
M98		**480**
70W Ceramic Metal Halide	System Wattage (W)	98
	Nominal Current	0.23A
70W Quartz Metal Halide	Ballast Factor	1
	Ballast Efficiency Factor	0.71
	Max Input Current	0.23 A
	Starting Current	1.10 A
	Open Circuit Voltage	260V
	Drop Out Voltage	360V
	Power Factor (>=) %	90
	Min. Starting Temp (°F/°C)	-20 / -30
	Fuse Rating	1
	UL Bench Top Rise	A

Safety and performance cUL Listed UL Listed

See page E-1 for warranty information.

86675 – GEM100MLTLC3D-5

Metal Halide

1 – 100W MH M90 or M140 Quad (120/208/240/277V)

- Magnetic ballast construction ideal for a wide variety of lighting applications
- Precision-wound coils, ensuring even heat dissipation and the highest electrical integrity
- Distributor replacement kit contains the appropriate core and coil with color coded leads, a properly rated capacitor and ignitor (if required) and all other components required for ballast replacement
- Quad ballast (120, 208, 240, 277)

General characteristics

Ballast Type	Magnetic – Core and Coil
ANSI Lamp Codes	M92, M90, M140
Voltage	120/208/240/277
Line Voltage Regulation (+/-)	5%
Circuit Type	HX-HPF
Insulation Class	180C
Type of Capacitor	Dry film
Capacitance	12 Mfd GECAP-12/280V-D
Voltage (MIN)	280
Capacitor Temperature Rating	100°C (212°F)
GE Igniter	MH350-1A
Sound Rating	
Additional Info	

Electrical characteristics

Supply Current Frequency	60 Hz

Dimensions

Wiring diagram HID W-(H) – see example on page 18-68	
Case dimensions – Ref Drawing PC1 – see page 18-71	
Length (L)	5.25 in (133 mm)
Width (W)	1.25 in (32 mm)
Mounting dimensions	
Mount Length (M)	4.6 in (117 mm)
Mount Width (X or F)	
Mount Slots (MS)	0.25 in (6 mm)
A	2.0
B	3.0
Weight	5.00 lbs
Exit Type	Side
Nominal Length	2.7 in (69 mm)
Frame Size (H x L)	2.813 in x 3.939 in

Order information

Type	No. Items Per Sales Unit	No. Items Per Standard Package
Distributor Kit	1	6

Specifications by lamp and line voltage

Lamp	Specifications by line voltage	120	208	240	277
M92	System Wattage (W)	119	119	119	119
	Nominal Current	1.10 A	0.60 A	0.50 A	0.50 A
	Ballast Factor	1	1	1	1
	Ballast Efficiency Factor				
	Max Input Current	2.27 A	1.30 A	1.13 A	0.98 A
	Starting Current	1.26 A	0.69 A	0.60 A	0.53 A
	Open Circuit Voltage	274V	274V	274V	274V
	Drop Out Voltage	96V	166V	192V	222V
	Power Factor (>=) %	90	90	90	90
	Min. Starting Temp	-22 / -30	-22 / -30	-22 / -30	-22 / -30
	Fuse Rating	5	4	3	3
	UL Bench Top Rise	D	D	D	D

Lamp	Specifications by line voltage	120	208	240	277
M90, M140 100W Ceramic Metal Halide 100W Quartz Metal Halide	System Wattage (W)	119	119	119	119
	Nominal Current	1.10 A	0.60 A	0.50 A	0.50 A
	Ballast Factor	1	1	1	1
	Ballast Efficiency Factor	0.84	0.84	0.84	0.84
	Max Input Current	2.27 A	1.30 A	1.13 A	0.98 A
	Starting Current	1.26 A	0.69 A	0.60 A	0.53 A
	Open Circuit Voltage	274V	274V	274V	274V
	Drop Out Voltage	96V	166V	192V	222V
	Power factor (>=) %		90	90	90
	Min. starting temperature	-22 / -30	-22 / -30	-22 / -30	-22 / -30
	Fuse rating	5	4	3	3
	UL bench top rise	D	D	D	D

Safety and performance

cUL Listed UL Listed

78519 – GEM100TRILC3-5

Metal Halide

1 – 100W M140 Tri Tap (120/277/347V)

- Magnetic ballast construction ideal for a wide variety of lighting applications
- Precision-wound coils, ensuring even heat dissipation and the highest electrical integrity
- Distributor replacement kit contains the appropriate core and coil with color coded leads, a properly rated capacitor and ignitor (if required) and all other components required for ballast replacement
- Tri Tap ballast (120/277/347)

General characteristics

Ballast Type	Magnetic – Core and Coil
ANSI Lamp Codes	M140
Voltage	120/277/347
Line Voltage Regulation (+/-)	5%
Circuit Type	HX-HPF
Insulation Class	Class N, 200C
Type of Capacitor	Dry film
Capacitance	12 Mfd GECAP-12/280V-D
Voltage (MIN)	300
Capacitor Temperature Rating	105°C (221°F)
GE Igniter	MH350-1A
Sound Rating	
Additional Info	

Electrical characteristics

Supply Current Frequency	50 Hz/60 Hz

Dimensions

Wiring diagram HID W-(L) – see example on page 18-69	
Case dimensions – Ref Drawing PC1 – see page 18-71	
Length (L)	5.25 in (133 mm)
Width (W)	1.25 in (32 mm)
Mounting dimensions	
Mount Length (M)	
Mount Width (X or F)	
Mount Slots (MS)	
A	1.61 in (41 mm)
B	3.07 in (75 mm)
Weight	5.43 lbs
Exit Type	Side
Nominal Length	3.54 in (90 mm)
Frame Size (H x L)	2.82 in (72 mm) x 3.94 in (101 mm)

Order information

Type	No. Items Per Sales Unit	No. Items Per Standard Package
Distributor Kit	1	6

Specifications by lamp and line voltage

Lamp	Specifications by line voltage	120	277	347
M140 100W MH	System Wattage (W)	128	128	128
	Nominal Current	1.16 A	0.50 A	0.40 A
	Ballast Factor	1	1	1
	Ballast Efficiency Factor	0.8	0.8	0.8
	Max Input Current	1.28 A	0.55 A	0.44 A
	Starting Current	1.50 A	1.50 A	1.50 A
	Open Circuit Voltage	230V	230V	230V
	Drop Out Voltage	102V	235V	295V
	Power Factor (>=) %	90	90	90
	Min. Starting Temp	-40 / -40	-40 / -40	-40 / -40
	Fuse Rating	3.5	1.5	1.0
	UL Bench Top Rise	A	A	A

Safety and performance

cUL Listed UL Listed

Metal Halide

HID Electronic and Electromagnetic Ballasts For 20 – 175W Metal Halide HID Lamps

67333 – GEM10048TLA3D-5/2

Metal Halide

1 – 100W MH M90 or M140 480

- Magnetic ballast construction ideal for a wide variety of lighting applications
- Precision-wound coils, ensuring even heat dissipation and the highest electrical integrity
- Distributor replacement kit contains the appropriate core and coil with color coded leads, a properly rated capacitor and ignitor (if required) and all other components required for ballast replacement

General characteristics

Ballast Type	Magnetic – Core and Coil
ANSI Lamp Codes	M90 or M140
Voltage	480
Line Voltage Regulation (+/-)	5%
Circuit Type	HX-HPF
Insulation Class	Class H, 180°C or Class N, 200°C
Type of Capacitor	Dry film
Capacitance	12 Mfd GECAP-12/280V-D
Voltage (MIN)	300
Capacitor Temperature Rating	100°C (212°F)
GE Igniter	MH350-1A
Sound Rating	
Additional Info	

Electrical characteristics

Supply Current Frequency	60 Hz

Order information

Type	No. Items Per Sales Unit	No. Items Per Standard Package
Distributor Kit	1	6

Specifications by lamp and line voltage

Lamp	Specifications by line voltage	
M90, M140		**480**
100W Ceramic Metal Halide	System Wattage (W)	130
	Nominal Current	0.30 A
	Ballast Factor	1
	Ballast Efficiency Factor	0.76
	Max Input Current	0.30 A
	Starting Current	1.40 A
	Open Circuit Voltage	245V
	Drop Out Voltage	346V
	Power Factor (>=)%	90
	Min. Starting Temp (°F/°C)	-20 / -30
	Fuse Rating	1
	UL Bench Top Rise	A or D

Dimensions

Wiring diagram HID W-(F)– see example on page 18-68	
Case dimensions – Ref Drawing PC1 – see page 18-71	
Length (L)	5.25 in (133 mm)
Width (W)	1.25 in (32 mm)
Mounting dimensions	
Mount Length (M)	4.6 in (117 mm)
Mount Width (X or F)	
Mount Slots (MS)	0.25 in (6 mm)
A	1.60
B	2.80
Weight	5.10 lbs
Exit Type	Side
Nominal Length	2.7 in (69 mm)
Frame Size (H x L)	2.813 in x 3.939 in

Safety and performance

cUL Listed UL Listed

86718 – GEM150MLTLC3D-5

Metal Halide

1 – 150W MH M102 or M142 Quad (120/208/240/277V)

- Magnetic ballast construction ideal for a wide variety of lighting applications
- Precision-wound coils, ensuring even heat dissipation and the highest electrical integrity
- Distributor replacement kit contains the appropriate core and coil with color coded leads, a properly rated capacitor and ignitor (if required) and all other components required for ballast replacement
- Quad ballast (120, 208, 240, 277)

General characteristics

Ballast Type	Magnetic – Core and Coil
ANSI Lamp Codes	M142, M102
Voltage	120/208/240/277
Line Voltage Regulation (+/-)	5%
Circuit Type	HX-HPF
Insulation Class	180C
Type of Capacitor	Dry film
Capacitance	16 Mfd GECAP-16/280V-D
Voltage (MIN)	300
Capacitor Temperature Rating	100°C (212°F)
GE Igniter	MH350-1A
Sound Rating	
Additional Info	

Electrical characteristics

Supply Current Frequency	60 Hz

Order information

Type	No. Items Per Sales Unit	No. Items Per Standard Package
Distributor Kit	1	6

Specifications by lamp and line voltage

Lamp	Specifications by line voltage				
M142, M102		**120**	**208**	**240**	**277**
150W Ceramic Metal Halide	System Wattage (W)	186	186	186	186
	Nominal Current	1.60 A	1.00 A	0.80 A	0.70 A
	Ballast Factor	1	1	1	1
	Ballast Efficiency Factor	0.81	0.81	0.81	0.81
150W Quartz Metal Halide	Max Input Current	3.37 A	1.95 A	1.68 A	1.39 A
	Starting Current	1.86 A	1.03 A	0.89 A	0.77 A
	Open Circuit Voltage	257V	257V	257V	257V
	Drop Out Voltage	96V	166V	192V	222V
	Power Factor (>=)%	90	90	90	90
	Min. Starting Temp (°F/°C)	-22 / -30	-22 / -30	-22 / -30	-22 / -30
	Fuse Rating	10	5	5	4
	UL Bench Top Rise	A	B	A	A

Safety and performance

cUL Listed UL Listed

Dimensions

Wiring diagram HID W-(H) – see example on page 18-68	
Case dimensions – Ref Drawing PC1 – see page 18-71	
Length (L)	5.25 in (133 mm)
Width (W)	1.25 in (32 mm)
Mounting dimensions	
Mount Length (M)	4.6 in (117 mm)
Mount Width (X or F)	
Mount Slots (MS)	0.25 in (6 mm)
A	2.3
B	4.0
Weight	7.00 lbs
Exit Type	Side
Nominal Length	2.7 in (69 mm)
Frame Size (H x L)	2.813 in x 3.939 in

See page E-1 for warranty information.

78520 – GEM150TRILC3-5

Metal Halide

1 – 150W M102 Tri Tap (120/277/347V)

- Magnetic ballast construction ideal for a wide variety of lighting applications
- Precision-wound coils, ensuring even heat dissipation and the highest electrical integrity
- Distributor replacement kit contains the appropriate core and coil with color coded leads, a properly rated capacitor and ignitor (if required) and all other components required for ballast replacement
- Tri Tap ballast (120/277/347)

General characteristics

Ballast Type	Magnetic – Core and Coil
ANSI Lamp Codes	M102
Voltage	120/277/347
Line Voltage Regulation (+/-)	5%
Circuit Type	HX-HPF
Insulation Class	Class N, 200C
Type of Capacitor	Dry film
Capacitance	16 Mfd GECAP-16/280V-D
Voltage (MIN)	300
Capacitor Temperature Rating	105°C (221°F)
GE Igniter	MH350-1A
Sound Rating	
Additional Info	

Dimensions

Wiring diagram HID W-(L) – see example on page 18-69	
Case dimensions – Ref Drawing PC1 – see page 18-71	
Length (L)	5.25 in (133 mm)
Width (W)	1.25 in (32 mm)
Mounting dimensions	
Mount Length (M)	
Mount Width (X or F)	
Mount Slots (MS)	
A	2.17 in (55 mm)
B	3.62 in (92 mm)
Weight	6.91 lbs
Exit Type	Side
Nominal Length	3.54 in (90 mm)
Frame Size (H x L)	2.82 in (72 mm) x 3.94 in (101 mm)

Electrical characteristics

Supply Current Frequency	50 Hz/60 Hz

Order information

Type	No. Items Per Sales Unit	No. Items Per Standard Package
Distributor Kit	1	6

Specifications by lamp and line voltage

Lamp	Specifications by line voltage			
M102		**120**	**277**	**347**
150W	System Wattage (W)	190	190	190
MH	Nominal Current	1.7 A	0.75 A	0.59 A
	Ballast Factor	1	1	1
	Ballast Efficiency Factor	0.8	0.8	0.8
	Max Input Current	1.87 A	.83 A	.65 A
	Starting Current	2.30 A	2.30 A	2.30 A
	Open Circuit Voltage	235V	235V	235V
	Drop Out Voltage	102V	235V	295V
	Power Factor (>=)%	90	90	90
	Min. Starting Temp (°F/°C)	-40 / -40	-40 / -40	-40 / -40
	Fuse Rating	5	3	2
	UL Bench Top Rise	A	A	A

Safety and performance cUL Listed UL Listed

86711 – GEM15048TLC3D-5

Metal Halide

1 – 150W MH M102 or M142 480

- Magnetic ballast construction ideal for a wide variety of lighting applications
- Precision-wound coils, ensuring even heat dissipation and the highest electrical integrity
- Distributor replacement kit contains the appropriate core and coil with color coded leads, a properly rated capacitor and ignitor (if required) and all other components required for ballast replacement

General characteristics

Ballast Type	Magnetic – Core and Coil
ANSI Lamp Codes	M142, M102, M107
Voltage	480
Line Voltage Regulation (+/-)	5%
Circuit Type	HX-HPF
Insulation Class	180C
Type of Capacitor	Dry film
Capacitance	16 Mfd GECAP-16/280V-D
Voltage (MIN)	280
Capacitor Temperature Rating	100°C (212°F)
GE Igniter	MH350-1A
Sound Rating	
Additional Info	

Dimensions

Wiring diagram HID W-(E) – see example on page 18-68	
Case dimensions – Ref Drawing PC1 – see page 18-71	
Length (L)	5.25 in (133 mm)
Width (W)	1.25 in (32 mm)
Mounting dimensions	
Mount Length (M)	4.6 in (117 mm)
Mount Width (X or F)	
Mount Slots (MS)	0.25 in (6 mm)
A	2.3
B	3.9
Weight	7.00 lbs
Exit Type	Side
Nominal Length	2.7 in (69 mm)
Frame Size (H x L)	2.813 in x 3.939 in

Electrical characteristics

Supply Current Frequency	60 Hz

Order information

Type	No. Items Per Sales Unit	No. Items Per Standard Package
Distributor Kit	1	6

Specifications by lamp and line voltage

Lamp	Specifications by line voltage		Lamp	Specifications by line voltage	
M102, M142		**480**	**M107**		**480**
150W Ceramic Metal Halide	System Wattage (W)	185		System Wattage (W)	185
	Nominal Current	0.40 A		Nominal Current	0.40 A
150W Quartz Metal Halide	Ballast Factor	1		Ballast Factor	1
	Ballast Efficiency Factor	0.81		Ballast Efficiency Factor	0.83
	Max Input Current	0.85 A		Max Input Current	0.85 A
	Starting Current	0.38 A		Starting Current	0.38 A
	Open Circuit Voltage	264V		Open Circuit Voltage	264V
	Drop Out Voltage	384V		Drop Out Voltage	384V
	Power Factor (>=)%	90		Power Factor (>=)%	90
	Min. Starting Temp (°F/°C)	-22 / -30		Min. Starting Temp (°F/°C)	-22 / -30
	Fuse Rating	2		Fuse Rating	2
	UL Bench Top Rise	E		UL Bench Top Rise	E

Safety and performance cUL Listed UL Listed

See page E-1 for warranty information.

Metal Halide

HID Electronic and Electromagnetic Ballasts For 20 – 175W Metal Halide HID Lamps

87210 – GEM175ML5AC3-5

Metal Halide

1 – 175W MH M57 5-Tap (120/208/240/277/480V)

- Magnetic ballast construction ideal for a wide variety of lighting applications
- Precision-wound coils, ensuring even heat dissipation and the highest electrical integrity
- Distributor replacement kit contains the appropriate core and coil with color coded leads, a properly rated capacitor and ignitor (if required) and all other components required for ballast replacement
- 5-tap ballast (120, 208, 240, 277, or 480 Volt) featuring a 480-Volt tap

General characteristics

Ballast Type	Magnetic – Core and Coil
ANSI Lamp Codes	M57, H39, M109
Voltage	120/208/240/277/480
Line Voltage Regulation (+/-)	10%
Circuit Type	CWA
Insulation Class	180C
Type of Capacitor	Oil filled
Capacitance	10 Mfd GECAP-10/400V-O
Voltage (MIN)	400
Capacitor Temperature Rating	100°C (212°F)
GE Igniter	
Sound Rating	
Additional Info	

Electrical characteristics

Supply Current Frequency	60 Hz

Order information

Type	No. Items Per Sales Unit	No. Items Per Standard Package
Distributor Kit	1	6

Dimensions

Wiring diagram HID W-(K) – see example on page 18-69	
Case dimensions – Ref Drawing PC1 – see page 18-71	
Length (L)	5.25 in (133 mm)
Width (W)	1.25 in (32 mm)
Mounting dimensions	
Mount Length (M)	4.6 in (117 mm)
Mount Width (X or F)	
Mount Slots (MS)	0.25 in (6 mm)
A	3.0
B	4.0
Weight	3.40 lbs
Exit Type	Side
Nominal Length	2.7 in (69 mm)
Frame Size (H x L)	2.813 in x 3.939 in
Lead lengths	
Orange	
Violet and Black	
Violet/White	
Black/Yellow	

Specifications by lamp and line voltage

Lamp	Specifications by line voltage	120	208	240	277	480
M57, M109	System Wattage (W)	202	202	202	202	202
	Nominal Current	1.70 A	1.00 A	0.90 A	0.80 A	0.40 A
	Ballast Factor	1	1	1	1	1
	Ballast Efficiency Factor	0.87	0.87	0.87	0.87	0.87
	Max Input Current	1.70 A	1.00 A	0.90 A	0.80 A	0.40 A
	Starting Current	0.60 A	0.37 A	0.32 A	0.28 A	0.21 A
	Open Circuit Voltage	307V	307V	307V	307V	307V
	Drop Out Voltage	96V	166V	192V	222V	384V
	Power Factor (>=)%	90	90	90	90	90
	Min. Starting Temp (°F/°C)	-22 / -30	-22 / -30	-22 / -30	-22 / -30	-22 / -30
	Fuse Rating	5	3	3	2	1.5
	UL Bench Top Rise	D	C	C	C	C

Safety and performance

cUL Listed UL Listed

86741 – GEM175MLTAC3-5

Metal Halide

1 – 175W MH M57 Quad (120/208/240/277V)

- Magnetic ballast construction ideal for a wide variety of lighting applications
- Precision-wound coils, ensuring even heat dissipation and the highest electrical integrity
- Distributor replacement kit contains the appropriate core and coil with color coded leads, a properly rated capacitor and ignitor (if required) and all other components required for ballast replacement
- Quad ballast (120, 208, 240, 277)

General characteristics

Ballast Type	Magnetic – Core and Coil
ANSI Lamp Codes	M57, M107
Voltage	120/208/240/277
Line Voltage Regulation (+/-)	10%
Circuit Type	CWA
Insulation Class	180C
Type of Capacitor	Oil filled
Capacitance	10 Mfd GECAP-10/400V-O
Voltage (MIN)	400
Capacitor Temperature Rating	100°C (212°F)
GE Igniter	
Sound Rating	
Additional Info	

Dimensions

Wiring diagram HID W-(C) – see example on page 18-68	
Case dimensions – Ref Drawing PC1 – see page 18-71	
Length (L)	5.25 in (133 mm)
Width (W)	1.25 in (32 mm)
Mounting dimensions	
Mount Length (M)	4.6 in (117 mm)
Mount Width (X or F)	
Mount Slots (MS)	0.25 in (6 mm)
A	1.0
B	2.0
Weight	3.40 lbs
Exit Type	Side
Nominal Length	2.7 in (69 mm)
Frame Size (H x L)	2.813 in x 3.939 in

Electrical characteristics

Supply Current Frequency	60 Hz

Order information

Type	No. Items Per Sales Unit	No. Items Per Standard Package
Distributor Kit	1	6

Specifications by lamp and line voltage

Lamp	Specifications by line voltage	120	208	240	277
M57	System Wattage (W)	210	210	210	210
175W Quartz Metal Halide	Nominal Current	1.80 A	1.00 A	0.90 A	0.80 A
	Ballast Factor	1	1	1	1
150W Quartz Metal Halide	Ballast Efficiency Factor	0.83	0.83	0.83	0.83
	Max Input Current	1.80 A	1.00 A	0.90 A	0.80 A
	Starting Current	0.96 A	0.56 A	0.48 A	0.42 A
	Open Circuit Voltage	302V	302V	302V	302V
	Drop Out Voltage	96V	166V	192V	222V
	Power Factor (>=) %	90	90	90	90
	Min. Starting Temp	-22 / -30	-22 / -30	-22 / -30	-22 / -30
	Fuse Rating	5	3	3	2
	UL Bench Top Rise	B	B	B	C

Lamp	Specifications by line voltage	120	208	240	277
M107	System Wattage (W)	210	210	210	210
	Nominal Current	1.80 A	1.00 A	0.90 A	0.80 A
	Ballast Factor	1	1	1	1
	Ballast Efficiency Factor				
	Max Input Current	1.80 A	1.00 A	0.90 A	0.80 A
	Starting Current	0.96 A	0.56 A	0.48 A	0.42 A
	Open Circuit Voltage	302V	302V	302V	302V
	Drop Out Voltage	96V	166V	192V	222V
	Power factor (>=) %	90	90	90	90
	Min. starting temperature	-22 / -30	-22 / -30	-22 / -30	-22 / -30
	Fuse rating	5	3	3	2
	UL bench top rise	B	B	B	C

Safety and performance

cUL Listed UL Listed

See page E-1 for warranty information.

78521 – GEM175TRIAC3-5

Metal Halide

1 – 175W M57 Tri Tap (120/277/347V)

- Magnetic ballast construction ideal for a wide variety of lighting applications
- Precision-wound coils, ensuring even heat dissipation and the highest electrical integrity
- Distributor replacement kit contains the appropriate core and coil with color coded leads, a properly rated capacitor and ignitor (if required) and all other components required for ballast replacement
- Tri Tap ballast (120/277/347)

General characteristics

Ballast Type	Magnetic – Core and Coil
ANSI Lamp Codes	M57
Voltage	120/277/347
Line Voltage Regulation (+/-)	10%
Circuit Type	CWA
Insulation Class	Class N, 200C
Type of Capacitor	Oil filled
Capacitance	12 Mfd
Voltage (MIN)	450
Capacitor Temperature Rating	105°C (221°F)
GE Igniter	
Sound Rating	
Additional Info	

Electrical characteristics

Supply Current Frequency	60 Hz

Order information

Type	No. Items Per Sales Unit	No. Items Per Standard Package
Distributor Kit	1	6

Specifications by lamp and line voltage

Lamp	Specifications by line voltage			
M57		**120**	**277**	**347**
150W	System Wattage (W)	208	208	208
MH	Nominal Current	1.88 A	.85 A	.65 A
	Ballast Factor	1	1	1
	Ballast Efficiency Factor	0.82	0.82	0.82
	Max Input Current	2.07 A	.94 A	.72 A
	Starting Current	1.88 A	1.88 A	1.88 A
	Open Circuit Voltage	295V	295V	295V
	Drop Out Voltage	72V	166V	208V
	Power Factor (>=) %	90	90	90
	Min. Starting Temp	-20 / -29	-20 / -29	-20 / -29
	Fuse Rating	6	3	2
	UL Bench Top Rise	A	A	A

Safety and performance

cUL Listed UL Listed

Dimensions

Wiring diagram HID W-(M) – see example on page 18-69	
Case dimensions – Ref Drawing PC1 – see page 18-71	
Length (L)	5.25 in (133 mm)
Width (W)	1.25 in (32 mm)
Mounting dimensions	
Mount Length (M)	
Mount Width (X or F)	
Mount Slots (MS)	
A	2.17 in (55 mm)
B	3.62 in (92 mm)
Weight	6.91 lbs
Exit Type	Side
Nominal Length	3.54 in (90 mm)
Frame Size (H x L)	2.82 in (72 mm) x 3.94 in (101 mm)

See page E-1 for warranty information.

Metal Halide

HID Electronic and Electromagnetic Ballasts For 250 – 1500W Metal Halide HID Lamps

87211 – GEM250ML5AC3-5

Metal Halide

1 – 250W MH M58 5-Tap (120/208/240/277/480V)

- Magnetic ballast construction ideal for a wide variety of lighting applications
- Precision-wound coils, ensuring even heat dissipation and the highest electrical integrity
- Distributor replacement kit contains the appropriate core and coil with color coded leads, a properly rated capacitor and ignitor (if required) and all other components required for ballast replacement
- 5-tap ballast (120, 208, 240, 277, or 480 volt) featuring a 480-volt tap

General characteristics

Ballast Type	Magnetic – Core and Coil
ANSI Lamp Codes	M58
Voltage	120/208/240/277/480
Line Voltage Regulation (+/-)	10%
Circuit Type	CWA
Insulation Class	180C
Type of Capacitor	Oil filled
Capacitance	15 Mfd GECAP-15/400V-O
Voltage (MIN)	400
Capacitor Temperature Rating	100°C (212°F)
GE Igniter	
Sound Rating	
Additional Info	

Electrical characteristics

Supply Current Frequency	60 Hz

Order information

Type	No. Items Per Sales Unit	No. Items Per Standard Package
Distributor Kit	1	6

Dimensions

Wiring diagram HID W-(K) – see example on page 18-69	
Case dimensions – Ref Drawing PC1 – see page 18-71	
Length (L)	5.25 in (133 mm)
Width (W)	1.25 in (32 mm)
Mounting dimensions	
Mount Length (M)	4.6 in (117 mm)
Mount Width (X or F)	
Mount Slots (MS)	0.25 in (6 mm)
A	3.0
B	4.3
Weight	9.00 lbs
Exit Type	Side
Nominal Length	3.2 in (83 mm)
Frame Size (H x L)	2.813 in x 3.939 in
Lead lengths	
Orange	
Violet and Black	
Violet/White	
Black/Yellow	

Specifications by lamp and line voltage

Lamp	Specifications by line voltage					
M58		**120**	**208**	**240**	**277**	**480**
250W Quartz Metal Halide	System Wattage (W)	280	280	280	280	280
	Nominal Current	2.50 A	1.40 A	1.25 A	1.10 A	0.65 A
	Ballast Factor	1	1	1	1	1
	Ballast Efficiency Factor	0.89	0.89	0.89	0.89	0.89
	Max Input Current	2.60 A	1.60 A	1.30 A	1.20 A	0.70 A
	Starting Current	1.50 A	1.00 A	0.80 A	0.70 A	0.50 A
	Open Circuit Voltage	290V	290V	290V	290V	290V
	Drop Out Voltage	96V	166V	192V	222V	384V
	Power Factor (>=)%	90	90	90	90	90
	Min. Starting Temp (°F/°C)	-22 / -30	-22 / -30	-22 / -30	-22 / -30	-22 / -30
	Fuse Rating	8	5	4	3	2
	UL Bench Top Rise	B	B	B	C	C

Safety and performance cUL Listed UL Listed

86765 – GEM250MLTAC3-5

Metal Halide

1 – 250W MH M58 Quad (120/208/240/277V)

- Magnetic ballast construction ideal for a wide variety of lighting applications
- Precision-wound coils, ensuring even heat dissipation and the highest electrical integrity
- Distributor replacement kit contains the appropriate core and coil with color coded leads, a properly rated capacitor and ignitor (if required) and all other components required for ballast replacement
- Quad ballast (120, 208, 240, 277)

General characteristics

Ballast Type	Magnetic – Core and Coil
ANSI Lamp Codes	M58
Voltage	120/208/240/277
Line Voltage Regulation (+/-)	10%
Circuit Type	CWA
Insulation Class	180C
Type of Capacitor	Oil filled
Capacitance	15 Mfd GECAP-15/400V-O
Voltage (MIN)	400
Capacitor Temperature Rating	100°C (212°F)
GE Igniter	
Sound Rating	
Additional Info	

Electrical characteristics

Supply Current Frequency	60 Hz

Order information

Type	No. Items Per Sales Unit	No. Items Per Standard Package
Distributor Kit	1	6

Dimensions

Wiring diagram HID W-(C) – see example on page 18-68	
Case dimensions – Ref Drawing PC1 – see page 18-71	
Length (L)	5.25 in (133 mm)
Width (W)	1.25 in (32 mm)
Mounting dimensions	
Mount Length (M)	4.6 in (117 mm)
Mount Width (X or F)	
Mount Slots (MS)	0.25 in (6 mm)
A	3.0
B	4.3
Weight	9.00 lbs
Exit Type	Side
Nominal Length	3.2 in (83 mm)
Frame Size (H x L)	2.813 in x 3.939 in

Specifications by lamp and line voltage

Lamp	Specifications by line voltage				
M58		**120**	**208**	**240**	**277**
250W Quartz Metal Halide	System Wattage (W)	294	294	294	294
	Nominal Current	2.65 A	1.50 A	1.30 A	1.13 A
	Ballast Factor	1	1	1	1
	Ballast Efficiency Factor	0.85	0.85	0.85	0.85
	Max Input Current	2.60 A	1.58 A	1.30 A	1.12 A
	Starting Current	1.88 A	1.15 A	0.95 A	0.86 A
	Open Circuit Voltage	315V	315V	315V	315V
	Drop Out Voltage	96V	166V	192V	222V
	Power Factor (>=)%	90	90	90	90
	Min. Starting Temp (°F/°C)	-22 / -30	-22 / -30	-22 / -30	-22 / -30
	Fuse Rating	8	5	4	3
	UL Bench Top Rise	C	D	C	C

Safety and performance cUL Listed UL Listed

See page E-1 for warranty information.

78522 – GEM250TRIAC4-5

Metal Halide

1 – 250W M58 Tri Tap (120/277/347V)

- Magnetic ballast construction ideal for a wide variety of lighting applications
- Precision-wound coils, ensuring even heat dissipation and the highest electrical integrity
- Distributor replacement kit contains the appropriate core and coil with color coded leads, a properly rated capacitor and ignitor (if required) and all other components required for ballast replacement
- Tri Tap ballast (120/277/347)

General characteristics

Ballast Type	Magnetic – Core and Coil
ANSI Lamp Codes	M58
Voltage	120/277/347
Line Voltage Regulation (+/-)	10%
Circuit Type	CWA
Insulation Class	Class N, 200C
Type of Capacitor	Oil filled
Capacitance	15 Mfd GECAP-15/400V-O
Voltage (MIN)	450
Capacitor Temperature Rating	105°C (221°F)
GE Igniter	
Sound Rating	
Additional Info	

Electrical characteristics

Supply Current Frequency	50 Hz/60 Hz

Order information

Type	No. Items Per Sales Unit	No. Items Per Standard Package
Distributor Kit	1	6

Dimensions

Wiring diagram HID W-(M) – see example on page 18-69	
Case dimensions – Ref Drawing PC1 – see page 18-71	
Length (L)	5.25 in (133 mm)
Width (W)	1.25 in (32 mm)
Mounting dimensions	
Mount Length (M)	
Mount Width (X or F)	
Mount Slots (MS)	
A	2.17 in (55 mm)
B	3.62 in (92 mm)
Weight	10.02 lbs
Exit Type	Side
Nominal Length	4.37 in (111 mm)
Frame Size (H x L)	4.25 in (108 mm) x 4.75 in (121 mm)

Specifications by lamp and line voltage

Lamp	Specifications by line voltage			
M58		**120**	**277**	**347**
250W	System Wattage (W)	290	290	290
MH	Nominal Current	2.5A	1.08A	0.86A
	Ballast Factor	1	1	1
	Ballast Efficiency Factor	0.85	0.85	0.85
	Max Input Current	2.75 A	1.19 A	0.95 A
	Starting Current	2.30 A	2.30 A	2.30 A
	Open Circuit Voltage	305V	305V	305V
	Drop Out Voltage	72V	166V	208V
	Power Factor (>=)%	90	90	90
	Min. Starting Temp (°F/°C)	-20 / -29	-20 / -29	-20 / -29
	Fuse Rating	8	3	3
	UL Bench Top Rise	A	A	A

Safety and performance

cUL Listed UL Listed

87212 – GEM250ML5AC4-5

Metal Halide

1 – 250W MH M58 or 5-Tap (120/208/240/277/480V)

- Magnetic ballast construction ideal for a wide variety of lighting applications
- Precision-wound coils, ensuring even heat dissipation and the highest electrical integrity
- Distributor replacement kit contains the appropriate core and coil with color coded leads, a properly rated capacitor and ignitor (if required) and all other components required for ballast replacement
- 5-tap ballast (120, 208, 240, 277, or 480 volt) featuring a 480-volt tap

General characteristics

Ballast Type	Magnetic – Core and Coil
ANSI Lamp Codes	M58
Voltage	120/208/240/277/480
Line Voltage Regulation (+/-)	10%
Circuit Type	CWA
Insulation Class	180C
Type of Capacitor	Oil filled
Capacitance	15 Mfd GECAP-15/400V-O
Voltage (MIN)	400
Capacitor Temperature Rating	100°C (212°F)
GE Igniter	
Sound Rating	
Additional Info	

Electrical characteristics

Supply Current Frequency	60 Hz

Order information

Type	No. Items Per Sales Unit	No. Items Per Standard Package
Distributor Kit	1	3

Dimensions

Wiring diagram HID W-(K) – see example on page 18-69	
Case dimensions – Ref Drawing PC2 – see page 18-71	
Length (L)	5.25 in (133 mm)
Width (W)	1.25 in (32 mm)
Mounting dimensions	
Mount Length (M)	4.6 in (117 mm)
Mount Width (X or F)	
Mount Slots (MS)	0.25 in (6 mm)
A	1.8
B	3.6
Weight	10.80 lbs
Exit Type	Side
Nominal Length	3.2 in (83 mm)
Frame Size (H x L)	4.25 in x 4.75 in
Lead lengths	
Orange	
Violet and Black	
Violet/White	
Black/Yellow	

Specifications by lamp and line voltage

Lamp	Specifications by line voltage					
M58		**120**	**208**	**240**	**277**	**480**
	System Wattage (W)	293	293	293	293	293
	Nominal Current	4.00 A	2.30 A	2.00 A	1.70 A	1.00 A
	Ballast Factor	1	1	1	1	1
	Ballast Efficiency Factor	0.85	0.85	0.85	0.85	0.85
	Max Input Current	2.50 A	1.40 A	1.30 A	1.10 A	0.65 A
	Starting Current	2.50 A	1.40 A	1.20 A	1.00 A	0.60 A
	Open Circuit Voltage	300V	300V	300V	300V	300V
	Drop Out Voltage	96V	166V	192V	222V	384V
	Power Factor (>=)%	90	90	90	90	90
	Min. Starting Temp (°F/°C)	-22 / -30	-22 / -30	-22 / -30	-22 / -30	-22 / -30
	Fuse Rating	8	5	4	3	2
	UL Bench Top Rise	A	A	A	A	A

Safety and performance

cUL Listed UL Listed

See page E-1 for warranty information.

Metal Halide
HID Electronic and Electromagnetic Ballasts For 250 – 1500W Metal Halide HID Lamps

78523 – GEM400TRIAC4-5

Metal Halide

1 – 400W M59 Tri Tap (120/277/347V)

- Magnetic ballast construction ideal for a wide variety of lighting applications
- Precision-wound coils, ensuring even heat dissipation and the highest electrical integrity
- Distributor replacement kit contains the appropriate core and coil with color coded leads, a properly rated capacitor and ignitor (if required) and all other components required for ballast replacement
- Tri Tap ballast (120/277/347)

General characteristics

Ballast Type	Magnetic – Core and Coil
ANSI Lamp Codes	M59
Voltage	120/277/347
Line Voltage Regulation (+/-)	10%
Circuit Type	CWA
Insulation Class	Class N, 200C
Type of Capacitor	Oil filled
Capacitance	24 Mfd GECAP-24/480V-O
Voltage (MIN)	450
Capacitor Temperature Rating	105°C (221°F)
GE Igniter	
Sound Rating	
Additional Info	

Electrical characteristics

Supply Current Frequency	50 Hz/60 Hz

Order information

Type	No. Items Per Sales Unit	No. Items Per Standard Package
Distributor Kit	1	3

Dimensions

Wiring diagram HID W-(M) – see example on page 18-69	
Case dimensions – Ref Drawing PC2 – see page 18-71	
Length (L)	5.25 in (133 mm)
Width (W)	1.25 in (32 mm)
Mounting dimensions	
Mount Length (M)	
Mount Width (X or F)	
Mount Slots (MS)	
A	2.17 in (55 mm)
B	4.06 in (103 mm)
Weight	11.11 lbs
Exit Type	Side
Nominal Length	4.37 in (111 mm)
Frame Size (H x L)	4.25 in (108 mm) x 4.75 in (121 mm)
Lead lengths	
Orange	
Violet and Black	
Violet/White	
Black/Yellow	

Specifications by lamp and line voltage

Lamp	Specifications by line voltage			
M59		**120**	**277**	**347**
400W	System Wattage (W)	460	460	460
MH	Nominal Current	4.0 A	1.75 A	1.38 A
	Ballast Factor	1	1	1
	Ballast Efficiency Factor	0.86	0.86	0.86
	Max Input Current	4.40 A	1.93 A	1.52 A
	Starting Current	4.00 A	4.00 A	4.00 A
	Open Circuit Voltage	305V	305V	305V
	Drop Out Voltage	72V	166V	208V
	Power Factor (>=)%	90	90	90
	Min. Starting Temp (°F/°C)	-20 / -29	-20 / -29	-20 / -29
	Fuse Rating	8	3	3
	UL Bench Top Rise	A	A	B

Safety and performance cUL Listed UL Listed

72300 – GEM400ML5AA4-5/2

Metal Halide

1 – 400W M59 or H33 5-Tap (120/208/240/277/480V) A1 C&C

- Magnetic ballast construction ideal for a wide variety of lighting applications
- Precision-wound coils, ensuring even heat dissipation and the highest electrical integrity
- Distributor replacement kit contains the appropriate core and coil with color coded leads, a properly rated capacitor and ignitor (if required) and all other components required for ballast replacement
- 5-tap ballast (120, 208, 240, 277, or 480 Volt) featuring a 480-Volt tap

General characteristics

Ballast Type	Magnetic – Core and Coil
ANSI Lamp Codes	M59
Voltage	120/208/240/277/480
Line Voltage Regulation (+/-)	10%
Circuit Type	CWA
Insulation Class	Class H, 180°C or Class N, 200°C
Type of Capacitor	Oil filled
Capacitance	24 Mfd GECAP-24/400V-O
Voltage (MIN)	450
Capacitor Temperature Rating	105°C (221°F)
GE Igniter	
Sound Rating	
Additional Info	

Electrical characteristics

Supply Current Frequency	60 Hz

Order information

Type	No. Items Per Sales Unit	No. Items Per Standard Package
Distributor Kit	1	3

Dimensions

Wiring diagram HID W-(K) – see example on page 18-69	
Case dimensions – Ref Drawing PC2 – see page 18-71	
Length (L)	5.25 in (133 mm)
Width (W)	1.25 in (32 mm)
Mounting dimensions	
Mount Length (M)	4.6 in (117 mm)
Mount Width (X or F)	
Mount Slots (MS)	0.25 in (6 mm)
A	2.17
B	3.90
Weight	10.8 lbs
Exit Type	Side
Nominal Length	3.7 in (95 mm)
Frame Size (H x L)	4.25 in x 4.75 in
Lead lengths	
Orange	
Violet and Black	
Violet/White	
Black/Yellow	

Specifications by lamp and line voltage

Lamp	Specifications by line voltage					
M59		**120**	**208**	**240**	**277**	**480**
400W Quartz	System Wattage (W)	461	461	461	461	461
Metal Halide	Nominal Current	4.0 A	2.3 A	2.0 A	1.75 A	1.00 A
	Ballast Factor	1	1	1	1	1
360W Quartz	Ballast Efficiency Factor	0.86	0.86	0.86	0.86	0.86
Metal Halide	Max Input Current	4.0 A	2.3 A	2.0 A	1.75 A	1.00 A
	Starting Current	3.90 A	3.90 A	3.90 A	3.90 A	3.90 A
	Open Circuit Voltage	300V	300V	300V	300V	300V
	Drop Out Voltage	580V	580V	580V	580V	580V
	Power Factor (>=)%	90	90	90	90	90
	Min. Starting Temp (°F/°C)	-22 / -30	-22 / -30	-22 / -30	-22 / -30	-22 / -30
	Fuse Rating	8	5	4	3	2
	UL Bench Top Rise	D or A	D or A	D or A	D or A	D or A

Safety and performance cUL Listed UL Listed

See page E-1 for warranty information.

72149 – GEM400MLTAA4-5

Metal Halide

1 – 400W MH M59 Quad (120/208/240/277V) A1 C&C

- Magnetic ballast construction ideal for a wide variety of lighting applications
- Precision-wound coils, ensuring even heat dissipation and the highest electrical integrity
- Distributor replacement kit contains the appropriate core and coil with color coded leads, a properly rated capacitor and ignitor (if required) and all other components required for ballast replacement
- Quad ballast (120, 208, 240, 277)

General characteristics

Ballast Type	Magnetic – Core and Coil
ANSI Lamp Codes	M59
Voltage	120/208/240/277
Line Voltage Regulation (+/-)	10%
Circuit Type	CWA
Insulation Class	Class H, 180°C or Class N, 200°C
Type of Capacitor	Oil filled
Capacitance	24 Mfd GECAP-24/400V-O
Voltage (MIN)	450
Capacitor Temperature Rating	105°C (221°F)
GE Igniter	
Sound Rating	
Additional Info	

Dimensions

Wiring diagram HID W-(C) – see example on page 18-68	
Case dimensions – Ref Drawing PC2 – see page 18-71	
Length (L)	5.25 in (133 mm)
Width (W)	1.25 in (32 mm)
Mounting dimensions	
Mount Length (M)	4.6 in (117 mm)
Mount Width (X or F)	
Mount Slots (MS)	0.25 in (6 mm)
A	2.17
B	3.90
Weight	10.80 lbs
Exit Type	Side
Nominal Length	3.7 in (95 mm)
Frame Size (H x L)	4.25 in x 4.75 in

Electrical characteristics

Supply Current Frequency	60 Hz

Order information

Type	No. Items Per Sales Unit	No. Items Per Standard Package
Distributor Kit	1	3

Specifications by lamp and line voltage

Lamp	Specifications by line voltage				
M59		**120**	**208**	**240**	**277**
400W Quartz Metal Halide	System Wattage (W)	457	457	457	457
	Nominal Current	4.0 A	2.30 A	2.00 A	1.75 A
360W Quartz Metal Halide	Ballast Factor	1	1	1	1
	Ballast Efficiency Factor	0.93	0.93	0.93	0.93
	Max Input Current	4.0 A	2.30 A	2.00 A	1.75 A
	Starting Current	3.80 A	3.80 A	3.80 A	3.80 A
	Open Circuit Voltage	300V	300V	300V	300V
	Drop Out Voltage	580V	580V	580V	580V
	Power Factor (>=)%	90	90	90	90
	Min. Starting Temp (°F/°C)	-22 / -30	-22 / -30	-22 / -30	-22 / -30
	Fuse Rating	8	5	4	3
	UL Bench Top Rise	D or A	D or A	D or A	D or A

Safety and performance cUL Listed UL Listed

63070 – GEM40048TAA4 – 5/2

Metal Halide

1 – 400W MH M59 480

- Magnetic ballast construction ideal for a wide variety of lighting applications
- Precision-wound coils, ensuring even heat dissipation and the highest electrical integrity
- Distributor replacement kit contains the appropriate core and coil with color coded leads, a properly rated capacitor and ignitor (if required) and all other components required for ballast replacement

General characteristics

Ballast Type	Magnetic – Core and Coil
ANSI Lamp Codes	M59
Voltage	480
Line Voltage Regulation (+/-)	10%
Circuit Type	CWA
Insulation Class	Class H, 180°C or Class N, 200°C
Type of Capacitor	Oil filled
Capacitance	24 Mfd GECAP-24/400V-O
Voltage (MIN)	400
Capacitor Temperature Rating	105°C (221°F)
GE Igniter	
Sound Rating	
Additional Info	

Dimensions

Wiring diagram HID W-(J) – see example on page 18-68	
Case dimensions – Ref Drawing PC2 – see page 18-71	
Length (L)	5.25 in (133 mm)
Width (W)	1.25 in (32 mm)
Mounting dimensions	
Mount Length (M)	4.6 in (117 mm)
Mount Width (X or F)	
Mount Slots (MS)	0.25 in (6 mm)
A	2.17
B	3.90
Weight	11.50 lbs
Exit Type	Side
Nominal Length	3.7 in (95 mm)
Frame Size (H x L)	4.25 in x 4.75 in

Electrical characteristics

Supply Current Frequency	60 Hz

Order information

Type	No. Items Per Sales Unit	No. Items Per Standard Package
Distributor Kit	1	3

Specifications by lamp and line voltage

Lamp	Specifications by line voltage	
M59		**480**
400W Quartz Metal Halide	System Wattage (W)	460
	Nominal Current	1.00 A
360W Quartz Metal Halide	Ballast Factor	1
	Ballast Efficiency Factor	0.90
	Max Input Current	1.00 A
	Starting Current	3.80 A
	Open Circuit Voltage	295V
	Drop Out Voltage	560V
	Power Factor (>=)%	90
	Min. Starting Temp (°F/°C)	-22 / -30
	Fuse Rating	2
	UL Bench Top Rise	D or A

Safety and performance cUL Listed UL Listed

See page E-1 for warranty information.

Metal Halide

HID Electronic and Electromagnetic Ballasts For 250 – 1500W Metal Halide HID Lamps

63069 – GEM100048TAC5-5/2

Metal Halide

1 – 1000W MH M47 480

- Magnetic ballast construction ideal for a wide variety of lighting applications.
- Precision-wound coils, ensuring even heat dissipation and the highest electrical integrity.
- Distributor replacement kit contains the appropriate core and coil with color coded leads, a properly rated capacitor and ignitor (if required) and all other components required for ballast replacement

General characteristics

Ballast Type	Magnetic – Core and Coil
ANSI Lamp Codes	M47
Voltage	480
Line Voltage Regulation (+/-)	10%
Circuit Type	CWA
Insulation Class	Class H, 180°C or Class N, 200°C
Type of Capacitor	Oil filled
Capacitance	24 Mfd GECAP-24/480V-O
Voltage (MIN)	480
Capacitor Temperature Rating	105°C (221°F)
GE Igniter	
Sound Rating	
Additional Info	

Electrical characteristics

Supply Current Frequency	60 Hz

Order information

Type	No. Items Per Sales Unit	No. Items Per Standard Package
Distributor Kit	1	2

Dimensions

Wiring diagram HID W-(J) – see example on page 18-68	
Case dimensions – Ref Drawing PC3 – see page 18-71	
Length (L)	7.75 in (197 mm)
Width (W)	2.75 in (70 mm)
Mounting dimensions	
Mount Length (M)	6.1 in (155 mm)
Mount Width (X or F)	
Mount Slots (MS)	0.25 in (6 mm)
A	3.25
B	5.20
Weight	21.30 lbs
Exit Type	Side
Nominal Length	3.7 in (95 mm)
Frame Size (H x L)	4.25 in x 6.00 in

Specifications by lamp and line voltage

Lamp	Specifications by line voltage	
M47		**480**
1000W Quartz Metal Halide	System Wattage (W)	1,050
	Nominal Current	2.25 A
	Ballast Factor	1
	Ballast Efficiency Factor	1
	Max Input Current	2.25 A
	Starting Current	5.60 A
	Open Circuit Voltage	420V
	Drop Out Voltage	840V
	Power Factor (>=)%	90
	Min. Starting Temp (°F/°C)	-22 / -30
	Fuse Rating	5
	UL Bench Top Rise	D or A

Safety and performance cUL Listed UL Listed

87213 – GEM1000ML5AA5-5/2

Metal Halide

1 – 1000W MH M47 5-Tap (120/208/240/277/480V)

- Magnetic ballast construction ideal for a wide variety of lighting applications
- Precision-wound coils, ensuring even heat dissipation and the highest electrical integrity
- Distributor replacement kit contains the appropriate core and coil with color coded leads, a properly rated capacitor and ignitor (if required) and all other components required for ballast replacement
- 5-tap ballast (120, 208, 240, 277, or 480 Volt) featuring a 480-Volt tap

General characteristics

Ballast Type	Magnetic – Core and Coil
ANSI Lamp Codes	M47
Voltage	120/208/240/277/480
Line Voltage Regulation (+/-)	10%
Circuit Type	CWA
Insulation Class	Class H, 180°C or Class N, 200°C
Type of Capacitor	Oil filled
Capacitance	24 Mfd GECAP-24/480V-O
Voltage (MIN)	480
Capacitor Temperature Rating	105°C (221°F)
GE Igniter	
Sound Rating	
Additional Info	

Electrical characteristics

Supply Current Frequency	60 Hz

Order information

Type	No. Items Per Sales Unit	No. Items Per Standard Package
Distributor Kit	1	2

Dimensions

Wiring diagram HID W-(K) – see example on page 18-69	
Case dimensions – Ref Drawing PC3 – see page 18-71	
Length (L)	7.75 in (197 mm)
Width (W)	2.75 in (70 mm)
Mounting dimensions	
Mount Length (M)	6.1 in (155 mm)
Mount Width (X or F)	
Mount Slots (MS)	0.25 in (6 mm)
A	3.0
B	5.0
Weight	21.00 lbs
Exit Type	Side
Nominal Length	3.7 in (95 mm)
Frame Size (H x L)	4.25 in x 6.00 in
Lead lengths	
Orange	
Violet and Black	
Violet/White	
Black/Yellow	

Specifications by lamp and line voltage

Lamp	Specifications by line voltage					
M47		**120**	**208**	**240**	**277**	**480**
1000W Quartz Metal Halide	System Wattage (W)	1,050	1,050	1,050	1,050	1,050
	Nominal Current	9.00 A	5.20 A	4.50 A	3.90 A	2.25 A
	Ballast Factor	1	1	1	1	1
	Ballast Efficiency Factor	0.91	0.91	0.91	0.91	0.91
	Max Input Current	9.00 A	5.20 A	4.50 A	3.90 A	2.25 A
	Starting Current	5.60 A	5.60 A	5.60 A	5.60 A	5.60 A
	Open Circuit Voltage	415V	415V	415V	415V	415V
	Drop Out Voltage	96V	166V	192V	222V	384V
	Power Factor (>=)%	90	90	90	90	90
	Min. Starting Temp (°F/°C)	-22 / -30	-22 / -30	-22 / -30	-22 / -30	-22 / -30
	Fuse Rating	18	10	9	7	5
	UL Bench Top Rise	D or A	D or A	D or A	D or A	D or A

Safety and performance cUL Listed UL Listed

See page E-1 for warranty information.

86655 – GEM1000MLTAA5-5/2

Metal Halide

1 – 1000W MH M47 Quad (120/208/240/277V)

- Magnetic ballast construction ideal for a wide variety of lighting applications
- Precision-wound coils, ensuring even heat dissipation and the highest electrical integrity
- Distributor replacement kit contains the appropriate core and coil with color coded leads, a properly rated capacitor and ignitor (if required) and all other components required for ballast replacement
- Quad ballast (120, 208, 240, 277)

General characteristics

Ballast Type	Magnetic – Core and Coil
ANSI Lamp Codes	M47
Voltage	120/208/240/277
Line Voltage Regulation (+/-)	10%
Circuit Type	CWA
Insulation Class	Class H, 180°C or Class N, 200°C
Type of Capacitor	Oil filled
Capacitance	24 Mfd GECAP-24/480V-O
Voltage (MIN)	540
Capacitor Temperature Rating	105°C (221°F)
GE Igniter	
Sound Rating	
Additional Info	

Electrical characteristics

Supply Current Frequency	60 Hz

Order information

Type	No. Items Per Sales Unit	No. Items Per Standard Package
Distributor Kit	1	2

Dimensions

Wiring diagram HID W-(C) – see example on page 18-68	
Case dimensions – Ref Drawing PC3 – see page 18-71	
Length (L)	7.75 in (197 mm)
Width (W)	2.75 in (70 mm)
Mounting dimensions	
Mount Length (M)	6.1 in (155 mm)
Mount Width (X or F)	
Mount Slots (MS)	0.25 in (6 mm)
A	3.10
B	5.30
Weight	20.30 lbs
Exit Type	Side
Nominal Length	3.7 in (95 mm)
Frame Size (H x L)	4.25 in x 6.00 in

Specifications by lamp and line voltage

Lamp	Specifications by line voltage				
M47		**120**	**208**	**240**	**277**
1000W Quartz Metal Halide	System Wattage (W)	1,050	1,050	1,050	1,050
	Nominal Current	8.80 A	5.10 A	4.40 A	3.80 A
	Ballast Factor	1	1	1	1
	Ballast Efficiency Factor	0.91	0.91	0.91	0.91
	Max Input Current	8.80 A	5.10 A	4.40 A	3.80 A
	Starting Current	5.60 A	5.60 A	5.60 A	5.60 A
	Open Circuit Voltage	415V	415V	415V	415V
	Drop Out Voltage	830V	830V	830V	830V
	Power Factor (>=)%	90	90	90	90
	Min. Starting Temp (°F/°C)	-22 / -30	-22 / -30	-22 / -30	-22 / -30
	Fuse Rating	18	10	9	7
	UL Bench Top Rise	D or A	D or A	D or A	D or A

Safety and performance cUL Listed UL Listed

78524 – GEM1000TRIAC5-5

Metal Halide

1 – 1000W M47 Tri Tap (120/277/347V)

- Magnetic ballast construction ideal for a wide variety of lighting applications
- Precision-wound coils, ensuring even heat dissipation and the highest electrical integrity
- Distributor replacement kit contains the appropriate core and coil with color coded leads, a properly rated capacitor and ignitor (if required) and all other components required for ballast replacement
- Tri Tap ballast (120/277/347)

General characteristics

Ballast Type	Magnetic – Core and Coil
ANSI Lamp Codes	M47
Voltage	120/277/347
Line Voltage Regulation (+/-)	10%
Circuit Type	CWA
Insulation Class	Class N, 200C
Type of Capacitor	Oil filled
Capacitance	24 Mfd GECAP-24/480V-O
Voltage (MIN)	540
Capacitor Temperature Rating	105°C (221°F)
GE Igniter	
Sound Rating	
Additional Info	

Electrical characteristics

Supply Current Frequency	50 Hz/60 Hz

Order information

Type	No. Items Per Sales Unit	No. Items Per Standard Package
Distributor Kit	1	2

Dimensions

Wiring diagram HID W-(M) – see example on page 18-69	
Case dimensions – Ref Drawing PC3 – see page 18-71	
Length (L)	5.25 in (133 mm)
Width (W)	1.25 in (32 mm)
Mounting dimensions	
Mount Length (M)	
Mount Width (X or F)	
Mount Slots (MS)	
A	2.96 in (75 mm)
B	4.92 in (125 mm)
Weight	24.1 lbs
Exit Type	Side
Nominal Length	5.37 in (136 mm)
Frame Size (H x L)	4.25 in (108 mm) x 6.00 in (152 mm)

Specifications by lamp and line voltage

Lamp	Specifications by line voltage			
M47		**120**	**277**	**347**
1000W MH	System Wattage (W)	1080	1080	1080
	Nominal Current	9.5 A	4.0 A	3.3 A
	Ballast Factor	1	1	1
	Ballast Efficiency Factor	0.92	0.92	0.92
	Max Input Current	10.5 A	4.4 A	3.6 A
	Starting Current	5.70 A	5.70 A	5.70 A
	Open Circuit Voltage	305V	305V	305V
	Drop Out Voltage	72V	166V	208V
	Power Factor (>=)%	90	90	90
	Min. Starting Temp (°F/°C)	-20 / -29	-20 / -29	-20 / -29
	Fuse Rating	28	12	10
	UL Bench Top Rise	E	E	E

Safety and performance cUL Listed UL Listed

See page E-1 for warranty information.

Metal Halide

HID Electronic and Electromagnetic Ballasts For 250 – 1500W Metal Halide HID Lamps

86693 – GEM150048TAC5M5-5

Metal Halide

1 – 1500W MH M48 480

- Magnetic ballast construction ideal for a wide variety of lighting applications
- Precision-wound coils, ensuring even heat dissipation and the highest electrical integrity
- Distributor replacement kit contains the appropriate core and coil with color coded leads, a properly rated capacitor and ignitor (if required) and all other components required for ballast replacement

General characteristics

Ballast Type	Magnetic – Core and Coil
ANSI Lamp Codes	M48
Voltage	480
Line Voltage Regulation (+/-)	10%
Circuit Type	CWA
Insulation Class	180C
Type of Capacitor	Oil filled
Capacitance	32 Mfd GECAP-32/525V-O
Voltage (MIN)	525
Capacitor Temperature Rating	100°C (212°F)
GE Igniter	
Sound Rating	
Additional Info	

Electrical characteristics

Supply Current Frequency	60 Hz

Order information

Type	No. Items Per Sales Unit	No. Items Per Standard Package
Distributor Kit	1	2

Specifications by lamp and line voltage

Lamp	Specifications by line voltage	
M48		**480**
1500W Quartz Metal Halide	System Wattage (W)	1,581
	Nominal Current	3.10 A
	Ballast Factor	1
	Ballast Efficiency Factor	0.95
	Max Input Current	3.10 A
	Starting Current	3.18 A
	Open Circuit Voltage	449V
	Drop Out Voltage	384V
	Power Factor (>=)%	90
	Min. Starting Temp (°F/°C)	-22 / -30
	Fuse Rating	10
	UL Bench Top Rise	G

Dimensions

Wiring diagram HID W-(J) – see example on page 18-68	
Case dimensions – Ref Drawing PC3 – see page 18-71	
Length (L)	7.75 in (197 mm)
Width (W)	2.75 in (70 mm)
Mounting dimensions	
Mount Length (M)	6.1 in (155 mm)
Mount Width (X or F)	
Mount Slots (MS)	0.25 in (6 mm)
A	4.0
B	6.0
Weight	30.00 lbs
Exit Type	Side
Nominal Length	5.2 in (133 mm)
Frame Size (H x L)	4.25 in x 6.00 in

Safety and performance

cUL Listed UL Listed

86698 – GEM1500MLTAC5-5

Metal Halide

1 – 1500W MH M48 Quad (120/208/240/277V)

- Magnetic ballast construction ideal for a wide variety of lighting applications
- Precision-wound coils, ensuring even heat dissipation and the highest electrical integrity
- Distributor replacement kit contains the appropriate core and coil with color coded leads, a properly rated capacitor and ignitor (if required) and all other components required for ballast replacement
- Quad ballast (120, 208, 240, 277)

General characteristics

Ballast Type	Magnetic – Core and Coil
ANSI Lamp Codes	M48
Voltage	240/277
Line Voltage Regulation (+/-)	10%
Circuit Type	CWA
Insulation Class	180C
Type of Capacitor	Oil filled
Capacitance	32 Mfd GECAP-32/525V-O
Voltage (MIN)	525
Capacitor Temperature Rating	100°C (212°F)
GE Igniter	
Sound Rating	
Additional Info	

Electrical characteristics

Supply Current Frequency	60 Hz

Order information

Type	No. Items Per Sales Unit	No. Items Per Standard Package
Distributor Kit	1	2

Specifications by lamp and line voltage

Lamp	Specifications by line voltage				
M48		**120**	**208**	**240**	**277**
1500W Quartz Metal Halide	System Wattage (W)	1,602	1,602	1,602	1,602
	Nominal Current	13.70 A	7.70 A	6.80 A	6.00 A
	Ballast Factor	1	1	1	1
	Ballast Efficiency Factor	0.94	0.94	0.94	0.94
	Max Input Current	13.70 A	7.70 A	6.80 A	6.00 A
	Starting Current	12.95 A	7.46 A	6.52 A	5.75 A
	Open Circuit Voltage	440V	440V	440V	440V
	Drop Out Voltage	96V	166V	192V	222V
	Power Factor (>=)%	90	90		90
	Min. Starting Temp (°F/°C)	-22 / -30	-22 / -30	-22 / -30	-22 / -30
	Fuse Rating	40	25	20	20
	UL Bench Top Rise	E	A	A	A

Dimensions

Wiring diagram HID W-(C) – see example on page 18-68	
Case dimensions – Ref Drawing PC3 – see page 18-71	
Length (L)	7.75 in (197 mm)
Width (W)	2.75 in (70 mm)
Mounting dimensions	
Mount Length (M)	6.1 in (155 mm)
Mount Width (X or F)	
Mount Slots (MS)	0.25 in (6 mm)
A	4.0
B	6.0
Weight	30.00 lbs
Exit Type	Side
Nominal Length	5.2 in (133 mm)
Frame Size (H x L)	4.25 in x 6.00 in

Safety and performance

cUL Listed UL Listed

See page E-1 for warranty information.

67335 – GEP175MLTACA3-5/2

Pulse Start

1 – 175W PS M137 or M152 Quad (120/208/240/277V)

- Magnetic ballast construction ideal for a wide variety of lighting applications
- Precision-wound coils, ensuring even heat dissipation and the highest electrical integrity
- Distributor replacement kit contains the appropriate core and coil with color coded leads, a properly rated capacitor and ignitor (if required) and all other components required for ballast replacement
- Quad ballast (120, 208, 240, 277)

General characteristics

Ballast Type	Magnetic – Core and Coil
ANSI Lamp Codes	M152, M137
Voltage	120/208/240/277
Line Voltage Regulation (+/-)	10%
Circuit Type	Pulse Start CWA
Insulation Class	Class H, 180°C or Class N, 200°C
Type of Capacitor	Oil filled
Capacitance	10 Mfd GECAP-10/450V-O
Voltage (MIN)	450
Capacitor Temperature Rating	105°C (221°F)
GE Igniter	MH350-1A
Sound Rating	
Additional Info	

Electrical characteristics

Supply Current Frequency	60 Hz

Order information

Type	No. Items Per Sales Unit	No. Items Per Standard Package
Distributor Kit	1	6

Dimensions

Wiring diagram HID W-(A) – see example on page 18-68	
Case dimensions – Ref Drawing PC1 – see page 18-71	
Length (L)	5.25 in (133 mm)
Width (W)	1.25 in (32 mm)
Mounting dimensions	
Mount Length (M)	4.6 in (117 mm)
Mount Width (X or F)	
Mount Slots (MS)	0.25 in (6 mm)
A	2.60
B	3.90
Weight	7.20 lbs
Exit Type	Side
Nominal Length	3.2 in (83 mm)
Frame Size (H x L)	2.813 in x 3.939 in

Specifications by lamp and line voltage

Lamp	Specifications by line voltage	120	208	240	277
M153 250W Quartz Metal Halide **M137** 175W Quartz Metal Halide	System Wattage (W)	215	215	215	215
	Nominal Current	1.88 A	1.08 A	0.94 A	0.82 A
	Ballast Factor	1	1	1	1
	Ballast Efficiency Factor	.08	.08	.08	.08
	Max Input Current	1.88 A	1.08 A	0.94 A	0.82 A
	Starting Current	1.70 A	1.70 A	1.70 A	1.70 A
	Open Circuit Voltage	305V	305V	305V	305V
	Drop Out Voltage	580V	580V	580V	580V
	Power Factor (>=) %	90	90	90	90
	Min. Starting Temp	-20 / -30	-20 / -30	-20 / -30	-20 / -30
	Fuse Rating	3	2	2	1
	UL Bench Top Rise	D or A	D or A	D or A	D or A

Safety and performance cUL Listed UL Listed

78525 – GEP175TRIAC3-5

Pulse Start

1 – 175W PS M137 Tri Tap (120/277/347V)

- Magnetic ballast construction ideal for a wide variety of lighting applications
- Precision-wound coils, ensuring even heat dissipation and the highest electrical integrity
- Distributor replacement kit contains the appropriate core and coil with color coded leads, a properly rated capacitor and ignitor (if required) and all other components required for ballast replacement
- Tri Tap ballast (120/277/347)

General characteristics

Ballast Type	Magnetic – Core and Coil
ANSI Lamp Codes	M137
Voltage	120/277/347
Line Voltage Regulation (+/-)	10%
Circuit Type	Pulse Start CWA
Insulation Class	Class N, 200C
Type of Capacitor	Oil filled
Capacitance	12 Mfd
Voltage (MIN)	450
Capacitor Temperature Rating	105°C (221°F)
GE Igniter	
Sound Rating	
Additional Info	

Electrical characteristics

Supply Current Frequency	50 Hz/60 Hz

Order information

Type	No. Items Per Sales Unit	No. Items Per Standard Package
Distributor Kit	1	6

Dimensions

Wiring diagram HID W-(L) – see example on page 18-69	
Case dimensions – Ref Drawing PC1 – see page 18-71	
Length (L)	5.25 in (133 mm)
Width (W)	1.25 in (32 mm)
Mounting dimensions	
Mount Length (M)	
Mount Width (X or F)	
Mount Slots (MS)	
A	2.17 in (55 mm)
B	3.62 in (92 mm)
Weight	6.98 lbs
Exit Type	Side
Nominal Length	3.54 in (90 mm)
Frame Size (H x L)	2.82 in (72 mm) x 3.94 in (101 mm)

Specifications by lamp and line voltage

Lamp	Specifications by line voltage	120	277	347
M137 200W PS	System Wattage (W)	215	215	215
	Nominal Current	1.95 A	0.85 A	0.68 A
	Ballast Factor	1	1	1
	Ballast Efficiency Factor	0.86	0.86	0.86
	Max Input Current	2.15 A	.94 A	.75 A
	Starting Current	1.85 A	1.85 A	1.85 A
	Open Circuit Voltage	270V	270V	270V
	Drop Out Voltage	78V	180V	226V
	Power Factor (>=) %	90	90	90
	Min. Starting Temp	-40 / -40	-40 / -40	-40 / -40
	Fuse Rating	6	3	2
	UL Bench Top Rise	A	A	A

Safety and performance cUL Listed UL Listed

See page E-1 for warranty information.

Pulse Start

HID Electronic and Electromagnetic For 175 – 1000W Pulse Start Metal Halide HID Lamps

67334 – GEP17548TAA3-5/2

Pulse Start

1 – 175W PS M137 or M152 480

- Magnetic ballast construction ideal for a wide variety of lighting applications
- Precision-wound coils, ensuring even heat dissipation and the highest electrical integrity
- Distributor replacement kit contains the appropriate core and coil with color coded leads, a properly rated capacitor and ignitor (if required) and all other components required for ballast replacement

General characteristics

Ballast Type	Magnetic – Core and Coil
ANSI Lamp Codes	M152, M137
Voltage	480
Line Voltage Regulation (+/-)	10%
Circuit Type	Pulse Start CWA
Insulation Class	Class H, 180°C or Class N, 200°C
Type of Capacitor	Oil filled
Capacitance	10 Mfd GECAP-10/400V-O
Voltage (MIN)	450
Capacitor Temperature Rating	105°C (221°F)
GE Igniter	MH350-1A
Sound Rating	
Additional Info	

Electrical characteristics

Supply Current Frequency	60 Hz

Order information

Type	No. Items Per Sales Unit	No. Items Per Standard Package
Distributor Kit	1	6

Specifications by lamp and line voltage

Lamp	Specifications by line voltage	
M152, M137		**480**
175W Quartz	System Wattage (W)	215
Metal Halide	Nominal Current	0.47 A
	Ballast Factor	1
	Ballast Efficiency Factor	0.81
	Max Input Current	0.47 A
	Starting Current	1.70 A
	Open Circuit Voltage	300V
	Drop Out Voltage	580V
	Power Factor (>=)%	90
	Min. Starting Temp (°F/°C)	-20 / -30
	Fuse Rating	1
	UL Bench Top Rise	C or A

Dimensions

Wiring diagram HID W-(E) – see example on page 18-68	
Case dimensions – Ref Drawing PC1 – see page 18-71	
Length (L)	5.25 in (133 mm)
Width (W)	1.25 in (32 mm)
Mounting dimensions	
Mount Length (M)	4.6 in (117 mm)
Mount Width (X or F)	
Mount Slots (MS)	0.25 in (6 mm)
A	2.6
B	3.9
Weight	7.20 lbs
Exit Type	Side
Nominal Length	3.2 in (83 mm)
Frame Size (H x L)	2.813 in x 3.939 in

Safety and performance

cUL Listed UL Listed

78526 – GEP200TRIAC3-5

Pulse Start

1 – 200W PS M136 Tri Tap (120/277/347V)

- Magnetic ballast construction ideal for a wide variety of lighting applications
- Precision-wound coils, ensuring even heat dissipation and the highest electrical integrity
- Distributor replacement kit contains the appropriate core and coil with color coded leads, a properly rated capacitor and ignitor (if required) and all other components required for ballast replacement

General characteristics

Ballast Type	Magnetic – Core and Coil
ANSI Lamp Codes	M136
Voltage	120/277/347
Line Voltage Regulation (+/-)	10%
Circuit Type	Pulse Start CWA
Insulation Class	Class N, 200C
Type of Capacitor	Oil filled
Capacitance	16 Mfd
Voltage (MIN)	450
Capacitor Temperature Rating	105°C (221°F)
GE Igniter	MH350-1A
Sound Rating	
Additional Info	

Electrical characteristics

Supply Current Frequency	60 Hz

Order information

Type	No. Items Per Sales Unit	No. Items Per Standard Package
Distributor Kit	1	6

Specifications by lamp and line voltage

Lamp	Specifications by line voltage			
M136		**120**	**277**	**347**
200W	System Wattage (W)	240	240	240
PS	Nominal Current	2.2 A	0.95 A	0.76 A
	Ballast Factor	1	1	1
	Ballast Efficiency Factor	0.81	0.81	0.81
	Max Input Current	2.20 A	0.95 A	0.76 A
	Starting Current	1.95 A	1.95 A	1.95 A
	Open Circuit Voltage	250V	250V	250V
	Drop Out Voltage	90V	208V	260V
	Power Factor (>=)%	90	90	90
	Min. Starting Temp (°F/°C)	-40 / -40	-40 / -40	-40 / -40
	Fuse Rating	7	3	2
	UL Bench Top Rise	D	B	A

Dimensions

Wiring diagram HID W-(L) – see example on page 18-69	
Case dimensions – Ref Drawing PC1 – see page 18-71	
Length (L)	5.25 in (133 mm)
Width (W)	1.25 in (32 mm)
Mounting dimensions	
Mount Length (M)	
Mount Width (X or F)	
Mount Slots (MS)	
A	2.48 in (63 mm)
B	3.94 in (100 mm)
Weight	7.77 lbs
Exit Type	Side
Nominal Length	3.54 in (90 mm)
Frame Size (H x L)	2.82 in (72 mm) x 3.94 in (101 mm)

Safety and performance

cUL Listed UL Listed

See page E-1 for warranty information.

67344 – GEP250MLTAA4-5/2

Pulse Start

1 – 250W PS M138 or M153 Quad (120/208/240/277V)

- Magnetic ballast construction ideal for a wide variety of lighting applications
- Precision-wound coils, ensuring even heat dissipation and the highest electrical integrity
- Distributor replacement kit contains the appropriate core and coil with color coded leads, a properly rated capacitor and ignitor (if required) and all other components required for ballast replacement
- Quad ballast (120, 208, 240, 277)

General characteristics

Ballast Type	Magnetic – Core and Coil
ANSI Lamp Codes	M153, M138
Voltage	120/208/240/277
Line Voltage Regulation (+/-)	10%
Circuit Type	Pulse Start CWA
Insulation Class	Class H, 180°C or Class N, 200°C
Type of Capacitor	Oil filled
Capacitance	15 Mfd GECAP-15/400V-O
Voltage (MIN)	370
Capacitor Temperature Rating	105°C (221°F)
GE Igniter	MH350-1A
Sound Rating	
Additional Info	

Electrical characteristics

Supply Current Frequency	60 Hz

Order information

Type	No. Items Per Sales Unit	No. Items Per Standard Package
Distributor Kit	1	3

Specifications by lamp and line voltage

Lamp	Specifications by line voltage				
M153, M138		**120**	**208**	**240**	**277**
250W Quartz	System Wattage (W)	294	294	294	294
Metal Halide	Nominal Current	2.45 A	1.41 A	1.23 A	1.06 A
	Ballast Factor	1	1	1	1
	Ballast Efficiency Factor	0.85	0.85	0.85	0.85
	Max Input Current	2.45 A	1.41 A	1.23 A	1.06 A
	Starting Current	2.45 A	2.45 A	2.45 A	2.45 A
	Open Circuit Voltage	275V	275V	275V	275V
	Drop Out Voltage	550V	550V	550V	550V
	Power Factor (>=)%	90	90	90	90
	Min. Starting Temp (°F/°C)	-20 / -30	-20 / -30	-20 / -30	-20 / -30
	Fuse Rating	5	3	2	2
	UL Bench Top Rise	A or B	A or B	A or B	A or B

Dimensions

Wiring diagram HID W-(A) – see example on page 18-68	
Case dimensions – Ref Drawing PC2 – see page 18-71	
Length (L)	5.25 in (133 mm)
Width (W)	1.25 in (32 mm)
Mounting dimensions	
Mount Length (M)	4.6 in (117 mm)
Mount Width (X or F)	
Mount Slots (MS)	0.25 in (6 mm)
A	1.77
B	3.50
Weight	9.00 lbs
Exit Type	Side
Nominal Length	3.2 in (83 mm)
Frame Size (H x L)	4.25 in x 4.75 in

Safety and performance

cUL Listed UL Listed

78527 – GEP250TRIAC4-5

Pulse Start

1 – 250W PS M138 Tri Tap (120/277/347V)

- Magnetic ballast construction ideal for a wide variety of lighting applications
- Precision-wound coils, ensuring even heat dissipation and the highest electrical integrity
- Distributor replacement kit contains the appropriate core and coil with color coded leads, a properly rated capacitor and ignitor (if required) and all other components required for ballast replacement
- Tri Tap ballast (120/277/347)

General characteristics

Ballast Type	Magnetic – Core and Coil
ANSI Lamp Codes	M138
Voltage	120/277/347
Line Voltage Regulation (+/-)	10%
Circuit Type	Pulse Start CWA
Insulation Class	Class N, 200C
Type of Capacitor	Oil filled
Capacitance	15 Mfd GECAP-15/400V-O
Voltage (MIN)	450
Capacitor Temperature Rating	105°C (221°F)
GE Igniter	MH350-1A
Sound Rating	
Additional Info	

Electrical characteristics

Supply Current Frequency	50 Hz/60 Hz

Order information

Type	No. Items Per Sales Unit	No. Items Per Standard Package
Distributor Kit	1	3

Specifications by lamp and line voltage

Lamp	Specifications by line voltage			
M138		**120**	**277**	**347**
250W	System Wattage (W)	290	290	290
PS	Nominal Current	2.5 A	1.1 A	0.86 A
	Ballast Factor	1	1	1
	Ballast Efficiency Factor	0.85	0.85	0.85
	Max Input Current	2.75 A	1.21A	.95 A
	Starting Current	2.20 A	0.95 A	0.80 A
	Open Circuit Voltage	270V	270V	270V
	Drop Out Voltage	78V	180V	226V
	Power Factor (>=)%	90	90	90
	Min. Starting Temp (°F/°C)	-40 / -40	-40 / -40	-40 / -40
	Fuse Rating	8	3	3
	UL Bench Top Rise	A	A	A

Dimensions

Wiring diagram HID W-(L) – see example on page 18-69	
Case dimensions – Ref Drawing PC2 – see page 18-71	
Length (L)	5.25 in (133 mm)
Width (W)	1.25 in (32 mm)
Mounting dimensions	
Mount Length (M)	
Mount Width (X or F)	
Mount Slots (MS)	
A	1.5 in (38 mm)
B	3.23 in (82 mm)
Weight	9.4 lbs
Exit Type	Side
Nominal Length	4.37 in (111 mm)
Frame Size (H x L)	4.25 in (108 mm) x 4.75 in (121 mm)

Safety and performance

cUL Listed UL Listed

See page E-1 for warranty information.

Pulse Start

HID Electronic and Electromagnetic For 175 – 1000W Pulse Start Metal Halide HID Lamps

67336 – GEP25048TAA4-5/2

Pulse Start

1 – 250W PS M138 or M153 480

- Magnetic ballast construction ideal for a wide variety of lighting applications
- Precision-wound coils, ensuring even heat dissipation and the highest electrical integrity
- Distributor replacement kit contains the appropriate core and coil with color coded leads, a properly rated capacitor and ignitor (if required) and all other components required for ballast replacement

General characteristics

Ballast Type	Magnetic – Core and Coil
ANSI Lamp Codes	M153, M138
Voltage	480
Line Voltage Regulation (+/-)	10%
Circuit Type	Pulse Start CWA
Insulation Class	Class H, 180°C or Class N, 200°C
Type of Capacitor	Oil filled
Capacitance	15 Mfd GECAP-15/400V-O
Voltage (MIN)	370
Capacitor Temperature Rating	105°C (221°F)
GE Igniter	MH350-1A
Sound Rating	
Additional Info	

Electrical characteristics

Supply Current Frequency	60 Hz

Order information

Type	No. Items Per Sales Unit	No. Items Per Standard Package
Distributor Kit	1	3

Specifications by lamp and line voltage

Lamp	Specifications by line voltage	
M153		**480**
250W Quartz	System Wattage (W)	294
Metal Halide	Nominal Current	0.62 A
M138	Ballast Factor	1
	Ballast Efficiency Factor	0.84
	Max Input Current	0.62 A
	Starting Current	2.45 A
	Open Circuit Voltage	275V
	Drop Out Voltage	550V
	Power Factor (>=)%	90
	Min. Starting Temp (°F/°C)	-20 / -30
	Fuse Rating	1
	UL Bench Top Rise	A or C

Dimensions

Wiring diagram HID W-(E) – see example on page 18-68	
Case dimensions – Ref Drawing PC2 – see page 18-71	
Length (L)	5.25 in (133 mm)
Width (W)	1.25 in (32 mm)
Mounting dimensions	
Mount Length (M)	4.6 in (117 mm)
Mount Width (X or F)	
Mount Slots (MS)	0.25 in (6 mm)
A	1.79
B	3.50
Weight	9.00 lbs
Exit Type	Side
Nominal Length	3.2 in (83 mm)
Frame Size (H x L)	4.25 in x 4.75 in

Safety and performance

cUL Listed UL Listed

67345 – GEP320MLTAA4-5/2

Pulse Start

1 – 320W PS M132 or 154 Quad (120/208/240/277V)

- Magnetic ballast construction ideal for a wide variety of lighting applications
- Precision-wound coils, ensuring even heat dissipation and the highest electrical integrity
- Distributor replacement kit contains the appropriate core and coil with color coded leads, a properly rated capacitor and ignitor (if required) and all other components required for ballast replacement
- Quad ballast (120, 208, 240, 277)

General characteristics

Ballast Type	Magnetic – Core and Coil
ANSI Lamp Codes	M154, M132
Voltage	120/208/240/277
Line Voltage Regulation (+/-)	10%
Circuit Type	CWA
Insulation Class	Class H, 180°C or Class N, 200°C
Type of Capacitor	Oil filled
Capacitance	21 Mfd GECAP-21/345V-O
Voltage (MIN)	370
Capacitor Temperature Rating	105°C (221°F)
GE Igniter	MH350-1A
Sound Rating	
Additional Info	

Electrical characteristics

Supply Current Frequency	60 Hz

Order information

Type	No. Items Per Sales Unit	No. Items Per Standard Package
Distributor Kit	1	3

Specifications by lamp and line voltage

Lamp	Specifications by line voltage				
M154, M132		**120**	**208**	**240**	**277**
	System Wattage (W)	370	370	370	370
	Nominal Current	3.10 A	1.80 A	1.55 A	1.34 A
	Ballast Factor	1	1	1	1
	Ballast Efficiency Factor	0.86	0.86	0.86	0.86
	Max Input Current	3.10 A	1.80 A	1.55 A	1.34 A
	Starting Current	3.20 A	3.20 A	3.20 A	3.20 A
	Open Circuit Voltage	270V	270V	270V	270V
	Drop Out Voltage	540V	540V	540V	540V
	Power Factor (>=)%	90	90	90	90
	Min. Starting Temp (°F/°C)	-20 / -30	-20 / -30	-20 / -30	-20 / -30
	Fuse Rating	7	4	3	3
	UL Bench Top Rise	A or B	A or C	A or C	A or C

Dimensions

Wiring diagram HID W-(A) – see example on page 18-68	
Case dimensions – Ref Drawing PC2 – see page 18-71	
Length (L)	5.25 in (133 mm)
Width (W)	1.25 in (32 mm)
Mounting dimensions	
Mount Length (M)	4.6 in (117 mm)
Mount Slots (MS) Mount Width (X or F)	0.25 in (6 mm)
A	1.89
B	3.60
Weight	9.50 lbs
Exit Type	Side
Nominal Length	3.7 in (95 mm)
Frame Size (H x L)	4.25 in x 4.75 in

Safety and performance

cUL Listed UL Listed

See page E-1 for warranty information.

78528 – GEP320TRIAC4-5

Pulse Start

1 – 320W PS M132 Tri Tap (120/277/347V)

- Magnetic ballast construction ideal for a wide variety of lighting applications
- Precision-wound coils, ensuring even heat dissipation and the highest electrical integrity
- Distributor replacement kit contains the appropriate core and coil with color coded leads, a properly rated capacitor and ignitor (if required) and all other components required for ballast replacement
- Tri Tap ballast (120/277/347)

General characteristics

Ballast Type	Magnetic – Core and Coil
ANSI Lamp Codes	M132
Voltage	120/277/347
Line Voltage Regulation (+/-)	10%
Circuit Type	Pulse Start CWA
Insulation Class	Class N, 200C
Type of Capacitor	Oil filled
Capacitance	21 Mfd GECAP-21/345V-O
Voltage (MIN)	450
Capacitor Temperature Rating	105°C (221°F)
GE Igniter	MH350-1A
Sound Rating	
Additional Info	

Dimensions

Wiring diagram HID W-(L) – see example on page 18-69	
Case dimensions – Ref Drawing PC2 – see page 18-71	
Length (L)	5.25 in (133 mm)
Width (W)	1.25 in (32 mm)
Mounting dimensions	
Mount Length (M)	
Mount Slots (MS) Mount Width (X or F)	
A	1.77 in (45 mm)
B	3.50 in (89 mm)
Weight	11.02 lbs
Exit Type	Side
Nominal Length	4.37 in (111 mm)
Frame Size (H x L)	4.25 in (108 mm) x 4.75 in (121 mm)

Electrical characteristics

Supply Current Frequency	60 Hz

Order information

Type	No. Items Per Sales Unit	No. Items Per Standard Package
Distributor Kit	1	6

Specifications by lamp and line voltage

Lamp	Specifications by line voltage			
M132		**120**	**277**	**347**
320W	System Wattage (W)	375	375	375
PS	Nominal Current	3.2 A	1.40 A	1.10 A
	Ballast Factor	1	1	1
	Ballast Efficiency Factor	0.86	0.86	0.86
	Max Input Current	3.52 A	1.54 A	1.21 A
	Starting Current	3.40 A	3.40 A	3.40 A
	Open Circuit Voltage	270V	270V	270V
	Drop Out Voltage	78V	180V	226V
	Power Factor (>=)%	90	90	90
	Min. Starting Temp (°F/°C)	-40 / -40	-40 / -40	-40 / -40
	Fuse Rating	10	5	3
	UL Bench Top Rise	A	A	A

Safety and performance cUL Listed UL Listed

67342 – GEP32048TAC4-5/2

Pulse Start

1 – 320W PS M132 or M154 480

- Magnetic ballast construction ideal for a wide variety of lighting applications
- Precision-wound coils, ensuring even heat dissipation and the highest electrical integrity
- Distributor replacement kit contains the appropriate core and coil with color coded leads, a properly rated capacitor and ignitor (if required) and all other components required for ballast replacement

General characteristics

Ballast Type	Magnetic – Core and Coil
ANSI Lamp Codes	M154, M132
Voltage	480
Line Voltage Regulation (+/-)	10%
Circuit Type	Pulse Start CWA
Insulation Class	Class H, 180°C or Class N, 200°C
Type of Capacitor	Oil filled
Capacitance	21 Mfd GECAP-21/345V-O
Voltage (MIN)	370
Capacitor Temperature Rating	105°C (221°F)
GE Igniter	MH350-1A
Sound Rating	
Additional Info	

Dimensions

Wiring diagram HID W-(D) – see example on page 18-68	
Case dimensions – Ref Drawing PC2 – see page 18-71	
Length (L)	5.25 in (133 mm)
Width (W)	1.25 in (32 mm)
Height (H)	
Mounting dimensions	
Mount Length (M)	4.6 in (117 mm)
Mount Width (X or F)	
Mount Slots (MS)	0.25 in (6 mm)
A	2.17
B	3.90
Weight	10.90 lbs
Exit Type	Side
Nominal Length	3.7 in (95 mm)
Frame Size (H x L)	4.25 in x 4.75 in

Electrical characteristics

Supply Current Frequency	60 Hz

Order information

Type	No. Items Per Sales Unit	No. Items Per Standard Package
Distributor Kit	1	3

Specifications by lamp and line voltage

Lamp	Specifications by line voltage	
M154, M132		**480**
	System Wattage (W)	374
	Nominal Current	0.78 A
	Ballast Factor	1
	Ballast Efficiency Factor	0.85
	Max Input Current	0.78 A
	Starting Current	3.30 A
	Open Circuit Voltage	265V
	Drop Out Voltage	530V
	Power Factor (>=)%	90
	Min. Starting Temp (°F/°C)	-20 / -30
	Fuse Rating	2
	UL Bench Top Rise	A or C

Safety and performance cUL Listed UL Listed

See page E-1 for warranty information.

Pulse Start

HID Electronic and Electromagnetic For 175 – 1000W Pulse Start Metal Halide HID Lamps

67346 – GEP350MLTAA4-5/2

Pulse Start

1 – 350W PS M131 Quad (120/208/240/277V)

- Magnetic ballast construction ideal for a wide variety of lighting applications
- Precision-wound coils, ensuring even heat dissipation and the highest electrical integrity
- Distributor replacement kit contains the appropriate core and coil with color coded leads, a properly rated capacitor and ignitor (if required) and all other components required for ballast replacement
- Quad ballast (120, 208, 240, 277)

General characteristics

Ballast Type	Magnetic – Core and Coil
ANSI Lamp Codes	M131
Voltage	120/208/240/277
Line Voltage Regulation (+/-)	10%
Circuit Type	Pulse Start CWA
Insulation Class	Class H, 180°C or Class N, 200°C
Type of Capacitor	Oil filled
Capacitance	22 Mfd GECAP-22/345V-O
Voltage (MIN)	370
Capacitor Temperature Rating	105°C (221°F)
GE Igniter	MH350-1A
Sound Rating	
Additional Info	

Electrical characteristics

Supply Current Frequency	60 Hz

Order information

Type	No. Items Per Sales Unit	No. Items Per Standard Package
Distributor Kit	1	3

Specifications by lamp and line voltage

Lamp	Specifications by line voltage				
M131		**120**	**208**	**240**	**277**
350W Quartz Metal Halide	System Wattage (W)	404	404	404	404
	Nominal Current	3.30 A	1.90 A	1.65 A	1.45 A
	Ballast Factor	1	1	1	1
	Ballast Efficiency Factor	0.86	0.86	0.86	0.86
	Max Input Current	3.30 A	1.90 A	1.65 A	1.45 A
	Starting Current	3.40 A	3.40 A	3.40 A	3.40 A
	Open Circuit Voltage	265V	265V	265V	265V
	Drop Out Voltage	530V	530V	530V	530V
	Power Factor (>=)%	90	90	90	90
	Min. Starting Temp (°F/°C)	-20 / -30	-20 / -30	-20 / -30	-20 / -30
	Fuse Rating	7	4	3	3
	UL Bench Top Rise	A or D	A or D	A or D	A or D

Dimensions

Wiring diagram HID W-(A) – see example on page 18-68	
Case dimensions – Ref Drawing PC2 – see page 18-71	
Length (L)	5.25 in (133 mm)
Width (W)	1.25 in (32 mm)
Mounting dimensions	
Mount Length (M)	4.6 in (117 mm)
Mount Width (X or F)	
Mount Slots (MS)	0.25 in (6 mm)
A	1.89
B	3.6
Weight	9.50 lbs
Exit Type	Side
Nominal Length	3.7 in (95 mm)
Frame Size (H x L)	4.25 in x 4.75 in

Safety and performance

cUL Listed UL Listed

78529 – GEP350TRIAC4-5

Pulse Start

1 – 350W PS M131 Tri Tap (120/277/347V)

- Magnetic ballast construction ideal for a wide variety of lighting applications
- Precision-wound coils, ensuring even heat dissipation and the highest electrical integrity
- Distributor replacement kit contains the appropriate core and coil with color coded leads, a properly rated capacitor and ignitor (if required) and all other components required for ballast replacement
- Tri Tap ballast (120/277/347)

General characteristics

Ballast Type	Magnetic – Core and Coil
ANSI Lamp Codes	M131
Voltage	120/277/347
Line Voltage Regulation (+/-)	10%
Circuit Type	Pulse Start CWA
Insulation Class	Class N, 200C
Type of Capacitor	Oil filled
Capacitance	22 Mfd
Voltage (MIN)	450
Capacitor Temperature Rating	105°C (221°F)
GE Igniter	MH350-1A
Sound Rating	
Additional Info	

Electrical characteristics

Supply Current Frequency	60 Hz

Order information

Type	No. Items Per Sales Unit	No. Items Per Standard Package
Distributor Kit	1	3

Specifications by lamp and line voltage

Lamp	Specifications by line voltage			
M131		**120**	**277**	**347**
350W PS	System Wattage (W)	410	410	410
	Nominal Current	3.40 A	1.48 A	1.18 A
	Ballast Factor	1	1	1
	Ballast Efficiency Factor	0.84	0.84	0.84
	Max Input Current	3.74 A	1.63 A	1.30 A
	Starting Current	3.60 A	3.60 A	3.60 A
	Open Circuit Voltage	270V	270V	270V
	Drop Out Voltage	78V	180V	226V
	Power Factor (>=)%	90	90	90
	Min. Starting Temp (°F/°C)	-40 / -40	-40 / -40	-40 / -40
	Fuse Rating	10	6	3
	UL Bench Top Rise	A	A	A

Dimensions

Wiring diagram HID W-(L) – see example on page 18-69	
Case dimensions – Ref Drawing PC2 – see page 18-71	
Length (L)	5.25 in (133 mm)
Width (W)	1.25 in (32 mm)
Mounting dimensions	
Mount Length (M)	
Mount Width (X or F)	
Mount Slots (MS)	
A	1.77 in (45 mm)
B	3.50 in (89 mm)
Weight	11.10 lbs
Exit Type	Side
Nominal Length	4.37 in (111 mm)
Frame Size (H x L)	4.25 in (108 mm) x 4.75 in (121 mm)

Safety and performance

cUL Listed UL Listed

See page E-1 for warranty information.

67341 – GEP40048TAA4-5/2

Pulse Start

1 – 400W PS M135 or M155 480

- Magnetic ballast construction ideal for a wide variety of lighting applications
- Precision-wound coils, ensuring even heat dissipation and the highest electrical integrity
- Distributor replacement kit contains the appropriate core and coil with color coded leads, a properly rated capacitor and ignitor (if required) and all other components required for ballast replacement

General characteristics

Ballast Type	Magnetic – Core and Coil
ANSI Lamp Codes	M155, M135
Voltage	480
Line Voltage Regulation (+/-)	10%
Circuit Type	Pulse Start CWA
Insulation Class	Class H, 180°C or Class N, 200°C
Type of Capacitor	Oil filled
Capacitance	26 Mfd GECAP-26/400V-O
Voltage (MIN)	370
Capacitor Temperature Rating	105°C (221°F)
GE Igniter	MH350-1A
Sound Rating	
Additional Info	

Electrical characteristics

Supply Current Frequency	60 Hz

Order information

Type	No. Items Per Sales Unit	No. Items Per Standard Package
Distributor Kit	1	3

Specifications by lamp and line voltage

Lamp	Specifications by line voltage	
M155, M135		**480**
400W Quartz Metal Halide	System Wattage (W)	465
	Nominal Current	1.00 A
	Ballast Factor	1
	Ballast Efficiency Factor	0.86
	Max Input Current	1.00 A
	Starting Current	4.00 A
	Open Circuit Voltage	265V
	Drop Out Voltage	530V
	Power Factor (>=)%	90
	Min. Starting Temp (°F/°C)	-20 / -30
	Fuse Rating	2
	UL Bench Top Rise	A or C

Dimensions

Wiring diagram HID W-(D) – see example on page 18-68	
Case dimensions – Ref Drawing PC2 – see page 18-71	
Length (L)	5.25 in (133 mm)
Width (W)	1.25 in (32 mm)
Mounting dimensions	
Mount Length (M)	4.6 in (117 mm)
Mount Width (X or F)	
Mount Slots (MS)	0.25 in (6 mm)
A	2.17
B	3.90
Weight	11.50 lbs
Exit Type	Side
Nominal Length	4.6 in (119 mm)
Frame Size (H x L)	4.25 in x 4.75 in

Safety and performance

cUL Listed UL Listed

67347 – GEP400MLTAA4-5/2

Pulse Start

1 – 400W PS M59 Quad (120/208/240/277V)

- Magnetic ballast construction ideal for a wide variety of lighting applications
- Precision-wound coils, ensuring even heat dissipation and the highest electrical integrity
- Distributor replacement kit contains the appropriate core and coil with color coded leads, a properly rated capacitor and ignitor (if required) and all other components required for ballast replacement
- Quad ballast (120, 208, 240, 277)

General characteristics

Ballast Type	Magnetic – Core and Coil
ANSI Lamp Codes	M59
Voltage	120/208/240/277
Line Voltage Regulation (+/-)	10%
Circuit Type	CWA
Insulation Class	Class H, 180°C or Class N, 200°C
Type of Capacitor	Oil filled
Capacitance	24 Mfd GECAP-24/400V-O
Voltage (MIN)	450
Capacitor Temperature Rating	105°C (221°F)
GE Igniter	MH350-1A
Sound Rating	
Additional Info	

Electrical characteristics

Supply Current Frequency	60 Hz

Order information

Type	No. Items Per Sales Unit	No. Items Per Standard Package
Distributor Kit	1	3

Specifications by lamp and line voltage

Lamp	Specifications by line voltage				
M59		**120**	**208**	**240**	**277**
	System Wattage (W)	457	457	457	457
	Nominal Current	4.00 A	2.30 A	2.00 A	1.75 A
	Ballast Factor	1	1	1	1
	Ballast Efficiency Factor	0.87	0.87	0.87	0.87
	Max Input Current	4.00 A	2.30 A	2.00 A	1.75 A
	Starting Current	3.80 A	3.80 A	3.80 A	3.80 A
	Open Circuit Voltage	300V	300V	300V	300V
	Drop Out Voltage	580V	580V	580V	580V
	Power Factor (>=)%	90	90	90	90
	Min. Starting Temp (°F/°C)	-20 / -30	-20 / -30	-20 / -30	-20 / -30
	Fuse Rating	8	5	4	3
	UL Bench Top Rise	A or D	A or D	A or D	A or D

Dimensions

Wiring diagram HID W-(C) – see example on page 18-68	
Case dimensions – Ref Drawing PC2 – see page 18-71	
Length (L)	5.25 in (133 mm)
Width (W)	1.25 in (32 mm)
Mounting dimensions	
Mount Length (M)	4.6 in (117 mm)
Mount Width (X or F)	
Mount Slots (MS)	0.25 in (6 mm)
A	2.17
B	3.90
Weight	10.80 lbs
Exit Type	Side
Nominal Length	4.6 in (119 mm)
Frame Size (H x L)	4.25 in x 4.75 in

Safety and performance

cUL Listed UL Listed

See page E-1 for warranty information.

Pulse Start

HID Electronic and Electromagnetic For 175 – 1000W Pulse Start Metal Halide HID Lamps

78530 – GEP400TRIAC4-5

Pulse Start

1 – 400W PS M135 Tri Tap (120/277/347V)

- Magnetic ballast construction ideal for a wide variety of lighting applications
- Precision-wound coils, ensuring even heat dissipation and the highest electrical integrity
- Distributor replacement kit contains the appropriate core and coil with color coded leads, a properly rated capacitor and ignitor (if required) and all other components required for ballast replacement
- Tri Tap ballast (120/277/347)

General characteristics

Ballast Type	Magnetic – Core and Coil
ANSI Lamp Codes	M135
Voltage	120/277/347
Line Voltage Regulation (+/-)	10%
Circuit Type	Pulse Start CWA
Insulation Class	Class N, 200C
Type of Capacitor	Oil filled
Capacitance	26 Mfd GECAP-26/525V-O
Voltage (MIN)	450
Capacitor Temperature Rating	105°C (221°F)
GE Igniter	MH350-1A
Sound Rating	
Additional Info	

Dimensions

Wiring diagram HID W-(L) – see example on page 18-69	
Case dimensions – Ref Drawing PC2 – see page 18-71	
Length (L)	5.25 in (133 mm)
Width (W)	1.25 in (32 mm)
Mounting dimensions	
Mount Length (M)	
Mount Width (X or F)	
Mount Slots (MS)	
A	2.05 in (52 mm)
B	3.78 in (96 mm)
Weight	12.69 lbs
Exit Type	Side
Nominal Length	4.37 in (111 mm)
Frame Size (H x L)	4.25 in (108 mm) x 4.75 in (121 mm)

Electrical characteristics

Supply Current Frequency	60 Hz

Order information

Type	No. Items Per Sales Unit	No. Items Per Standard Package
Distributor Kit	1	3

Specifications by lamp and line voltage

Lamp	Specifications by line voltage			
M135		**120**	**277**	**347**
400W	System Wattage (W)	465	465	465
PS	Nominal Current	4.10 A	1.78 A	1.40 A
	Ballast Factor	1	1	1
	Ballast Efficiency Factor	0.86	0.86	0.86
	Max Input Current	4.51 A	1.96 A	1.54 A
	Starting Current	4.10 A	4.10 A	4.10 A
	Open Circuit Voltage	270V	270V	270V
	Drop Out Voltage	78V	180V	226V
	Power Factor (>=)%	90	90	90
	Min. Starting Temp (°F/°C)	-40 / -40	-40 / -40	-40 / -40
	Fuse Rating	12	5	4
	UL Bench Top Rise	A	A	A

Safety and performance cUL Listed UL Listed

67343 – GEP75048TAA5-5/2

Pulse Start

1 – 750W PS M149 480

- Magnetic ballast construction ideal for a wide variety of lighting applications
- Precision-wound coils, ensuring even heat dissipation and the highest electrical integrity
- Distributor replacement kit contains the appropriate core and coil with color coded leads, a properly rated capacitor and ignitor (if required) and all other components required for ballast replacement

General characteristics

Ballast Type	Magnetic – Core and Coil
ANSI Lamp Codes	M149
Voltage	480
Line Voltage Regulation (+/-)	10%
Circuit Type	Pulse Start CWA
Insulation Class	Class H, 180°C or Class N, 200°C
Type of Capacitor	Oil filled
Capacitance	28 Mfd GECAP-28/400V-O
Voltage (MIN)	450
Capacitor Temperature Rating	105°C (221°F)
GE Igniter	MH750-1A
Sound Rating	
Additional Info	

Dimensions

Wiring diagram HID W-(D) – see example on page 18-68	
Case dimensions – Ref Drawing PC3 – see page 18-71	
Length (L)	7.75 in (197 mm)
Width (W)	2.75 in (70 mm)
Mounting dimensions	
Mount Length (M)	6.1 in (155 mm)
Mount Width (X or F)	
Mount Slots (MS)	0.25 in (6 mm)
A	3.0
B	5.10
Weight	19.60 lbs
Exit Type	Side
Nominal Length	4.2 in (108 mm)
Frame Size (H x L)	4.25 in x 6.00 in

Electrical characteristics

Supply Current Frequency	60 Hz

Order information

Type	No. Items Per Sales Unit	No. Items Per Standard Package
Distributor Kit	1	2

Specifications by lamp and line voltage

Lamp	Specifications by line voltage	
M149		**480**
750W Quartz	System Wattage (W)	820
Metal Halide	Nominal Current	1.75 A
	Ballast Factor	1
	Ballast Efficiency Factor	0.90
	Max Input Current	1.75 A
	Starting Current	5.40 A
	Open Circuit Voltage	330V
	Drop Out Voltage	660V
	Power Factor (>=)%	90
	Min. Starting Temp (°F/°C)	-20 / -30
	Fuse Rating	3
	UL Bench Top Rise	A or C

Safety and performance cUL Listed UL Listed

See page E-1 for warranty information.

67350 – GEP750MLTAA5-5/2

Pulse Start

1 – 750W PS M149 Quad (120/208/240/277V)

- Magnetic ballast construction ideal for a wide variety of lighting applications
- Precision-wound coils, ensuring even heat dissipation and the highest electrical integrity
- Distributor replacement kit contains the appropriate core and coil with color coded leads, a properly rated capacitor and ignitor (if required) and all other components required for ballast replacement
- Quad ballast (120, 208, 240, 277)

General characteristics

Ballast Type	Magnetic – Core and Coil
ANSI Lamp Codes	M149
Voltage	120/208/240/277
Line Voltage Regulation (+/-)	10%
Circuit Type	Pulse Start CWA
Insulation Class	Class H, 180°C or Class N, 200°C
Type of Capacitor	Oil filled
Capacitance	28 Mfd GECAP-28/400V-O
Voltage (MIN)	450
Capacitor Temperature Rating	105°C (221°F)
GE Igniter	MH750-1B
Sound Rating	
Additional Info	

Electrical characteristics

Supply Current Frequency	60 Hz

Order information

Type	No. Items Per Sales Unit	No. Items Per Standard Package
Distributor Kit	1	2

Specifications by lamp and line voltage

Lamp	Specifications by line voltage				
M149		**120**	**208**	**240**	**277**
750W Quartz Metal Halide	System Wattage (W)	820	820	820	820
	Nominal Current	7.0 A	4.0 A	3.5 A	3.0 A
	Ballast Factor	1	1	1	1
	Ballast Efficiency Factor	0.90	0.90	0.90	0.90
	Max Input Current	7.0 A	4.0 A	3.5 A	3.0 A
	Starting Current	5.40 A	5.40 A	5.40 A	5.40 A
	Open Circuit Voltage	335V	335V	335V	335V
	Drop Out Voltage	670V	670V	670V	670V
	Power Factor (>=)%	90	90	90	90
	Min. Starting Temp (°F/°C)	-20 / -30	-20 / -30	-20 / -30	-20 / -30
	Fuse Rating	14	8	7	6
	UL Bench Top Rise	A or D	A or D	A or D	A or D

Dimensions

Wiring diagram HID W-(A) – see example on page 18-68	
Case dimensions – Ref Drawing PC3 – see page 18-71	
Length (L)	7.75 in (197 mm)
Width (W)	2.75 in (70 mm)
Mounting dimensions	
Mount Length (M)	6.1 in (155 mm)
Mount Width (X or F)	
Mount Slots (MS)	0.25 in (6 mm)
A	3.0
B	5.10
Weight	20.00 lbs
Exit Type	Side
Nominal Length	4.2 in (108 mm)
Frame Size (H x L)	4.25 in x 6.00 in

Safety and performance

cUL Listed UL Listed

78531 – GEP750TRIAC5-5

Pulse Start

1 – 750W PS M149 Tri Tap (120/277/347V)

- Magnetic ballast construction ideal for a wide variety of lighting applications
- Precision-wound coils, ensuring even heat dissipation and the highest electrical integrity
- Distributor replacement kit contains the appropriate core and coil with color coded leads, a properly rated capacitor and ignitor (if required) and all other components required for ballast replacement
- Tri Tap ballast (120/277/347)

General characteristics

Ballast Type	Magnetic – Core and Coil
ANSI Lamp Codes	M149
Voltage	120/277/347
Line Voltage Regulation (+/-)	10%
Circuit Type	Pulse Start CWA
Insulation Class	Class N, 200C
Type of Capacitor	Oil filled
Capacitance	28 Mfd GECAP-28/400V-O
Voltage (MIN)	450
Capacitor Temperature Rating	105°C (221°F)
GE Igniter	MH750-1B
Sound Rating	
Additional Info	

Electrical characteristics

Supply Current Frequency	60 Hz

Order information

Type	No. Items Per Sales Unit	No. Items Per Standard Package
Distributor Kit	1	2

Specifications by lamp and line voltage

Lamp	Specifications by line voltage			
M149		**120**	**277**	**347**
750W PS	System Wattage (W)	840	840	840
	Nominal Current	7.3 A	3.16 A	2.50 A
	Ballast Factor	1	1	1
	Ballast Efficiency Factor	0.91	0.91	0.91
	Max Input Current	8.0 A	3.5 A	2.80 A
	Starting Current	5.50 A	5.50 A	5.50 A
	Open Circuit Voltage	340V	340V	340V
	Drop Out Voltage	84V	194V	243V
	Power Factor (>=)%	90	90	90
	Min. Starting Temp (°F/°C)	-40 / -40	-40 / -40	-40 / -40
	Fuse Rating	22	11	10
	UL Bench Top Rise	A	A	A

Dimensions

Wiring diagram HID W-(L) – see example on page 18-69	
Case dimensions – Ref Drawing PC3 – see page 18-71	
Length (L)	5.25 in (133 mm)
Width (W)	1.25 in (32 mm)
Mounting dimensions	
Mount Length (M)	
Mount Width (X or F)	
Mount Slots (MS)	
A	2.80 in (71 mm)
B	4.50 in (114 mm)
Weight	20.83 lbs
Exit Type	Side
Nominal Length	5.37 in (136 mm)
Frame Size (H x L)	4.25 in (108 mm) x 6 in (152 mm)

Safety and performance

cUL Listed UL Listed

See page E-1 for warranty information.

Pulse Start

HID Electronic and Electromagnetic For 175 – 1000W Pulse Start Metal Halide HID Lamps

67348 – GEP1000MLTAA5-5/2

Pulse Start

1 – 1000W PS M141 Quad (120/208/240/277V)

General characteristics

Ballast Type	Magnetic – Core and Coil
ANSI Lamp Codes	M141
Voltage	120/208/240/277
Line Voltage Regulation (+/-)	10%
Circuit Type	Pulse Start CWA
Insulation Class	Class H, 180°C or Class N, 200°C
Type of Capacitor	Oil filled
Capacitance	24 Mfd GECAP-24/480V-O
Voltage (MIN)	480
Capacitor Temperature Rating	105°C (221°F)
GE Igniter	HPS100-4B
Sound Rating	D (37-42 decibels)
Additional Info	

Electrical characteristics

Supply Current Frequency	60 Hz

Order information

Type	No. Items Per Sales Unit	No. Items Per Standard Package
Distributor Kit	1	2

Specifications by lamp and line voltage

Lamp	Specifications by line voltage				
M141		120	208	240	277
	System Wattage (W)	1075	1075	1075	1075
	Nominal Current	9.0 A	5.2 A	4.5 A	3.9 A
	Ballast Factor	1	1	1	1
	Ballast Efficiency Factor	0.91	0.91	0.91	0.91
	Max Input Current	9.0 A	5.2 A	4.5 A	3.9 A
	Starting Current	5.60 A	5.60 A	5.60 A	5.60 A
	Open Circuit Voltage	420V	420V	420V	420V
	Drop Out Voltage	840V	840V	840V	840V
	Power Factor (>=)%	90	90	90	90
	Min. Starting Temp (°F/°C)	-20 / -30	-20 / -30	-20 / -30	-20 / -30
	Fuse Rating	18	10	9	8
	UL Bench Top Rise	A or D	A or D	A or D	A or D

Dimensions

Wiring diagram HID W-(A) – see example on page 18-68	
Case dimensions – Ref Drawing PC2 – see page 18-71	
Width (W)	7.75 in (197 mm)
Length (L)	2.75 in (70 mm)
Mounting dimensions	
Mount Length (M)	6.1 in (155 mm)
Mount Width (X or F)	6.1 in (155 mm)
Mount Slots (MS)	0.25 in (6 mm)
A	3.05
B	5.20
Weight	20.30 lbs
Exit Type	Side
Nominal Length	4.25 in (108 mm)
Frame Size (H x L)	4.25 in x 6.00 in

Safety and performance

cUL Listed UL Listed

78532 – GEP1000TRIAC5-5

Pulse Start

1 – 1000W PS M141 Tri Tap (120/277/347V)

General characteristics

Ballast Type	Magnetic – Core and Coil
ANSI Lamp Codes	M141
Voltage	120/277/347
Line Voltage Regulation (+/-)	10%
Circuit Type	Pulse Start CWA
Insulation Class	Class N, 200C
Type of Capacitor	Oil filled
Capacitance	25 Mfd
Voltage (MIN)	450
Capacitor Temperature Rating	105°C (221°F)
GE Igniter	HPS1000-4B
Sound Rating	D (37-42 decibels)
Additional Info	

Electrical characteristics

Supply Current Frequency	60 Hz

Order information

Type	No. Items Per Sales Unit	No. Items Per Standard Package
Distributor Kit	1	2

Specifications by lamp and line voltage

Lamp	Specifications by line voltage			
M141		120	277	347
1000W	System Wattage (W)	1075	1075	1075
PS	Nominal Current	9.0 A	3.9 A	3.1 A
	Ballast Factor	1	1	1
	Ballast Efficiency Factor	0.92	0.92	0.92
	Max Input Current	9.9 A	4.3 A	3.4 A
	Starting Current	5.50 A	5.50 A	5.50 A
	Open Circuit Voltage	390V	390V	390V
	Drop Out Voltage			
	Power Factor (>=)%	90	90	90
	Min. Starting Temp (°F/°C)	-40 / -40	-40 / -40	-40 / -40
	Fuse Rating	30	12	10
	UL Bench Top Rise	A	A	A

Dimensions

Wiring diagram HID W-(L) – see example on page 18-69	
Case dimensions – Ref Drawing PC3 – see page 18-71	
Width (W)	5.25 in (133 mm)
Length (L)	1.25 in (32 mm)
Mounting dimensions	
Mount Length (M)	
Mount Width (X or F)	
Mount Slots (MS)	
A	2.80 in (71 mm)
B	4.50 in (114 mm)
Weight	21.0 lbs
Exit Type	Side
Nominal Length	5.37 in (136 mm)
Frame Size (H x L)	4.25 in (108 mm) x 6.0 in (152 mm)

Safety and performance

cUL Listed UL Listed

See page E-1 for warranty information.

67349 – GEP1000ML5AA5-5/2

Pulse Start

1 – 1000W PS M141 5-Tap (120/208/240/277/480V)

General characteristics

Ballast Type	Magnetic – Core and Coil
ANSI Lamp Codes	M141
Voltage	120/208/240/277/480
Line Voltage Regulation (+/-)	10%
Circuit Type	Pulse Start CWA
Insulation Class	Class H, 180°C or Class N, 200°C
Type of Capacitor	Oil filled
Capacitance	24 Mfd GECAP-24/480V-O
Voltage (MIN)	540
Capacitor Temperature Rating	105°C (221°F)
GE Igniter	HPS1000-4B
Sound Rating	D (37-42 decibels)
Additional Info	

Electrical characteristics

Supply Current Frequency	60 Hz

Order information

Type	No. Items Per Sales Unit	No. Items Per Standard Package
Distributor Kit	1	2

Dimensions

Wiring diagram HID W-(A) – see example on page 18-68	
Case dimensions – Ref Drawing PC3 – see page 18-71	
Width (W)	7.75 in (197 mm)
Length (L)	2.75 in (70 mm)
Mounting dimensions	
Mount Length (M)	6.1 in (155 mm)
Mount Width (X or F)	6.1 in (155 mm)
Mount Slots (MS)	0.25 in (6 mm)
A	3.25
B	5.40
Weight	21.90 lbs
Exit Type	Side
Nominal Length	4.25 in (108 mm)
Frame Size (H x L)	4.25 in x 6.00 in

Specifications by lamp and line voltage

Lamp	Specifications by line voltage					
M141		**120**	**208**	**240**	**277**	**480**
	System Wattage (W)	1050	1050	1050	1050	1050
	Nominal Current	9.00 A	5.20 A	4.50 A	3.90 A	2.25 A
	Ballast Factor	1	1	1	1	1
	Ballast Efficiency Factor	0.91	0.91	0.91	0.91	0.91
	Max Input Current	9.00 A	5.20 A	4.50 A	3.90 A	2.25 A
	Starting Current	5.60 A	5.60 A	5.60 A	5.60 A	5.60 A
	Open Circuit Voltage	420V	420V	420V	420V	420V
	Drop Out Voltage	840V	840V	840V	840V	840V
	Power Factor (>=)%	90	90	90	90	90
	Min. Starting Temp (°F/°C)	-20 / -30	-20 / -30	-20 / -30	-20 / -30	-20 / -30
	Fuse Rating	18	10	9	7	5
	UL Bench Top Rise	A or C	A or C	A or C	A or C	A or C

Safety and performance

cUL Listed UL Listed

See page E-1 for warranty information.

High Pressure Sodium
HID Electronic and Electromagnetic For 50 – 150W High Pressure Sodium HID Lamps

87152 – GES50MLTLC3D-5

High Pressure Sodium

1 – 50W HPS S68 Quad (120/208/240/277V)

- Magnetic ballast construction ideal for a wide variety of lighting applications
- Precision-wound coils, ensuring even heat dissipation and the highest electrical integrity
- Distributor replacement kit contains the appropriate core and coil with color coded leads, a properly rated capacitor and ignitor (if required) and all other components required for ballast replacement
- Quad ballast (120, 208, 240, 277)

General characteristics

Ballast Type	Magnetic – Core and Coil
ANSI Lamp Codes	S68
Voltage	120/208/240/277
Line Voltage Regulation (+/-)	5%
Circuit Type	HX-HPF
Insulation Class	180C
Type of Capacitor	Dry film
Capacitance	5 Mfd GECAP-5/300V-D
Voltage (MIN)	280
Capacitor Temperature Rating	100°C (212°F)
GE Igniter	HPS150-3A
Sound Rating	
Additional Info	

Electrical characteristics

Supply Current Frequency	60 Hz

Order information

Type	No. Items Per Sales Unit	No. Items Per Standard Package
Distributor Kit	1	6

Dimensions

Wiring diagram HID W-(H) – see example on page 18-68	
Case dimensions – Ref Drawing PC1 – see page 18-71	
Length (L)	5.25 in (133 mm)
Width (W)	1.25 in (32 mm)
Mounting dimensions	
Mount Length (M)	4.6 in (117 mm)
Mount Width (X or F)	
Mount Slots (MS)	0.25 in (6 mm)
A	1.0
B	3.0
Weight	3.40 lbs
Exit Type	Side
Nominal Length	2.7 in (70 mm)
Frame Size (H x L)	2.813 in x 3.939 in

Specifications by lamp and line voltage

Lamp	Specifications by line voltage				
S68		**120**	**208**	**240**	**277**
50W High Pressure Sodium	System Wattage (W)	69	69	69	69
	Nominal Current	0.70 A	0.40 A	0.30 A	0.30 A
	Ballast Factor	1	1	1	1
	Ballast Efficiency Factor	0.72	0.72	0.72	0.72
	Max Input Current	0.93 A	0.54 A	0.46 A	0.40 A
	Starting Current	0.74 A	0.43 A	0.37 A	0.32 A
	Open Circuit Voltage	122V	122V	122V	122V
	Drop Out Voltage	96V	166V	192V	222V
	Power Factor (>=)%	90	90	90	90
	Min. Starting Temp (°F/°C)	-22 / -30	-22 / -30	-22 / -30	-22 / -30
	Fuse Rating	5	3	3	2
	UL Bench Top Rise	B	B	B	B

Safety and performance cUL Listed UL Listed

78533 – GES50TRILC3-5

High Pressure Sodium

1 – 50W HPS S68 Tri Tap (120/277/347V)

- Magnetic ballast construction ideal for a wide variety of lighting applications
- Precision-wound coils, ensuring even heat dissipation and the highest electrical integrity
- Distributor replacement kit contains the appropriate core and coil with color coded leads, a properly rated capacitor and ignitor (if required) and all other components required for ballast replacement
- Tri Tap ballast (120/277/347)

General characteristics

Ballast Type	Magnetic – Core and Coil
ANSI Lamp Codes	S68
Voltage	120/277/347
Line Voltage Regulation (+/-)	5%
Circuit Type	HX-HPF
Insulation Class	Class N, 200C
Type of Capacitor	Dry film
Capacitance	5 Mfd
Voltage (MIN)	300
Capacitor Temperature Rating	105°C (221°F)
GE Igniter	HPS150-3A
Sound Rating	
Additional Info	

Electrical characteristics

Supply Current Frequency	60 Hz

Order information

Type	No. Items Per Sales Unit	No. Items Per Standard Package
Distributor Kit	1	2

Dimensions

Wiring diagram HID W-(L) – see example on page 18-69	
Case dimensions – Ref Drawing PC1 – see page 18-71	
Length (L)	5.25 in (133 mm)
Width (W)	1.25 in (32 mm)
Mounting dimensions	
Mount Length (M)	
Mount Width (X or F)	
Mount Slots (MS)	
A	1.02 in (26 mm)
B	2.48 in (63 mm)
Weight	3.60 lbs
Exit Type	Side
Nominal Length	3.54 in (90 mm)
Frame Size (H x L)	2.82 in (72 mm) x 3.94 in (101 mm)

Specifications by lamp and line voltage

Lamp	Specifications by line voltage			
S68		**120**	**277**	**347**
50W HPS	System Wattage (W)	72	72	72
	Nominal Current	0.66 A	0.29 A	0.23 A
	Ballast Factor	1	1	1
	Ballast Efficiency Factor	0.73	0.73	0.73
	Max Input Current	.73 A	.32 A	.25 A
	Starting Current	1.60 A	1.60 A	1.60 A
	Open Circuit Voltage	120V	120V	120V
	Drop Out Voltage	102V	235V	295V
	Power Factor (>=)%	90	90	90
	Min. Starting Temp (°F/°C)	-40 / -40	-40 / -40	-40 / -40
	Fuse Rating	2	1	1
	UL Bench Top Rise	A	A	A

Safety and performance cUL Listed UL Listed

See page E-1 for warranty information.

86587 – GES70MLTLA3D-5

High Pressure Sodium

1 – 70W HPS S62 Quad (120/208/240/277V)

- Magnetic ballast construction ideal for a wide variety of lighting applications
- Precision-wound coils, ensuring even heat dissipation and the highest electrical integrity
- Distributor replacement kit contains the appropriate core and coil with color coded leads, a properly rated capacitor and ignitor (if required) and all other components required for ballast replacement
- Quad ballast (120, 208, 240, 277)

General characteristics

Ballast Type	Magnetic – Core and Coil
ANSI Lamp Codes	S62
Voltage	120/208/240/277
Line Voltage Regulation (+/-)	5%
Circuit Type	HX-HPF
Insulation Class	180C
Type of Capacitor	Dry film
Capacitance	7 Mfd GECAP-7/300V-D
Voltage (MIN)	300
Capacitor Temperature Rating	100°C (212°F)
GE Igniter	HPS150-3A
Sound Rating	
Additional Info	

Electrical characteristics

Supply Current Frequency	60 Hz

Order information

Type	No. Items Per Sales Unit	No. Items Per Standard Package
Distributor Kit	1	6

Dimensions

Wiring diagram HID W-(H) – see example on page 18-68	
Case dimensions – Ref Drawing PC1 – see page 18-71	
Length (L)	5.25 in (133 mm)
Width (W)	1.25 in (32 mm)
Mounting dimensions	
Mount Length (M)	4.6 in (117 mm)
Mount Width (X or F)	
Mount Slots (MS)	0.25 in (6 mm)
A	2.0
B	3.0
Weight	5.50 lbs
Exit Type	Side
Nominal Length	2.7 in (70 mm)
Frame Size (H x L)	2.813 in x 3.939 in

Specifications by lamp and line voltage

Lamp	Specifications by line voltage				
S62		**120**	**208**	**240**	**277**
70W High Pressure Sodium	System Wattage (W)	91	91	91	91
	Nominal Current	0.80 A	0.50 A	0.40 A	0.40 A
	Ballast Factor	1	1	1	1
	Ballast Efficiency Factor	0.77	0.77	0.77	0.77
	Max Input Current	1.34 A	0.78 A	0.67 A	0.59 A
	Starting Current	0.78 A	0.46 A	0.39 A	0.35 A
	Open Circuit Voltage	118V	118V	118V	118V
	Drop Out Voltage	96V	166V	192V	222V
	Power Factor (>=)%	90	90	90	90
	Min. Starting Temp (°F/°C)	-22 / -30	-22 / -30	-22 / -30	-22 / -30
	Fuse Rating	5	3	3	2
	UL Bench Top Rise	B	B	B	B

Safety and performance cUL Listed UL Listed

78534 – GES70TRILC3-5

High Pressure Sodium

1 – 70W HPS S62 Tri Tap (120/277/347V)

- Magnetic ballast construction ideal for a wide variety of lighting applications
- Precision-wound coils, ensuring even heat dissipation and the highest electrical integrity
- Distributor replacement kit contains the appropriate core and coil with color coded leads, a properly rated capacitor and ignitor (if required) and all other components required for ballast replacement
- Tri Tap ballast (120/277/347)

General characteristics

Ballast Type	Magnetic – Core and Coil
ANSI Lamp Codes	S62
Voltage	120/277/347
Line Voltage Regulation (+/-)	5%
Circuit Type	HX-HPF
Insulation Class	Class N, 200C
Type of Capacitor	Dry film
Capacitance	7 Mfd GECAP-7/300V-D
Voltage (MIN)	300
Capacitor Temperature Rating	105°C (221°F)
GE Igniter	HPS150-3A
Sound Rating	
Additional Info	

Electrical characteristics

Supply Current Frequency	50 Hz/60 Hz

Order information

Type	No. Items Per Sales Unit	No. Items Per Standard Package
Distributor Kit	1	6

Dimensions

Wiring diagram HID W-(L) – see example on page 18-69	
Case dimensions – Ref Drawing PC1 – see page 18-71	
Length (L)	5.25 in (133 mm)
Width (W)	1.25 in (32 mm)
Mounting dimensions	
Mount Length (M)	
Mount Width (X or F)	
Mount Slots (MS)	
A	1.50 in (38 mm)
B	2.95 in (75 mm)
Weight	4.85 lbs
Exit Type	Side
Nominal Length	3.54 in (90 mm)
Frame Size (H x L)	2.82 in (72 mm) x 3.94 in (101 mm)

Specifications by lamp and line voltage

Lamp	Specifications by line voltage			
S62		**120**	**277**	**347**
70W HPS	System Wattage (W)	96	96	96
	Nominal Current	0.88 A	0.38 A	0.30 A
	Ballast Factor	1	1	1
	Ballast Efficiency Factor	0.745	0.745	0.745
	Max Input Current	.97 A	.42 A	.033 A
	Starting Current	2.10 A	2.10 A	2.10 A
	Open Circuit Voltage	120V	120V	120V
	Drop Out Voltage	102V	235V	295V
	Power Factor (>=)%	90	90	90
	Min. Starting Temp (°F/°C)	-40 / -40	-40 / -40	-40 / -40
	Fuse Rating	3	1.5	1
	UL Bench Top Rise	A	A	A

Safety and performance cUL Listed UL Listed

See page E-1 for warranty information.

High Pressure Sodium
HID Electronic and Electromagnetic For 50 – 150W High Pressure Sodium HID Lamps

67340 – GES7048TLA3D-5/2

High Pressure Sodium

1 – 70W HPS S62 480V

- Magnetic ballast construction ideal for a wide variety of lighting applications
- Precision-wound coils, ensuring even heat dissipation and the highest electrical integrity
- Distributor replacement kit contains the appropriate core and coil with color coded leads, a properly rated capacitor and ignitor (if required) and all other components required for ballast replacement

General characteristics

Ballast Type	Magnetic – Core and Coil
ANSI Lamp Codes	S62
Voltage	480
Line Voltage Regulation (+/-)	5%
Circuit Type	HX-HPF
Insulation Class	Class H, 180°C or Class N, 200°C
Type of Capacitor	Dry film
Capacitance	7 Mfd GECAP-7/300V-D
Voltage (MIN)	300
Capacitor Temperature Rating	105°C (221°F)
GE Igniter	HPS150-3A 86635
Sound Rating	
Additional Info	

Electrical characteristics

Supply Current Frequency	60 Hz

Order information

Type	No. Items Per Sales Unit	No. Items Per Standard Package
Distributor Kit	1	6

Dimensions

Wiring diagram HID W-(F) – see example on page 18-68	
Case dimensions – Ref Drawing PC1 – see page 18-71	
Length (L)	5.25 in (133 mm)
Width (W)	1.25 in (32 mm)
Mounting dimensions	
Mount Length (M)	4.6 in (117 mm)
Mount Width (X or F)	
Mount Slots (MS)	0.25 in (6 mm)
A	1.9
B	3.0
Weight	6.00 lbs
Exit Type	Side
Nominal Length	2.7 in (70 mm)
Frame Size (H x L)	2.813 in x 3.939 in

Specifications by lamp and line voltage

Lamp	Specifications by line voltage	
S62		**480**
70W High Pressure Sodium	System Wattage (W)	93
	Nominal Current	0.22 A
	Ballast Factor	1
	Ballast Efficiency Factor	0.74
	Max Input Current	0.22 A
	Starting Current	1.85 A
	Open Circuit Voltage	120V
	Drop Out Voltage	170V
	Power Factor (>=)%	90
	Min. Starting Temp (°F/°C)	-20 / -30
	Fuse Rating	1
	UL Bench Top Rise	A

Safety and performance cUL Listed UL Listed

87074 – GES100MLTLC3D-5

High Pressure Sodium

1 – 100W HPS S54 Quad (120/208/240/277V)

- Magnetic ballast construction ideal for a wide variety of lighting applications
- Precision-wound coils, ensuring even heat dissipation and the highest electrical integrity
- Distributor replacement kit contains the appropriate core and coil with color coded leads, a properly rated capacitor and ignitor (if required) and all other components required for ballast replacement
- Quad ballast (120, 208, 240, 277)

General characteristics

Ballast Type	Magnetic – Core and Coil
ANSI Lamp Codes	S54
Voltage	120/208/240/277
Line Voltage Regulation (+/-)	5%
Circuit Type	HX-HPF
Insulation Class	180C
Type of Capacitor	Dry film
Capacitance	10 Mfd GECAP-10/400V-O
Voltage (MIN)	280
Capacitor Temperature Rating	100°C (212°F)
GE Igniter	HPS150-3A 86635
Sound Rating	
Additional Info	

Electrical characteristics

Supply Current Frequency	60 Hz

Order information

Type	No. Items Per Sales Unit	No. Items Per Standard Package
Distributor Kit	1	6

Dimensions

Wiring diagram HID W-(H) – see example on page 18-68	
Case dimensions – Ref Drawing PC1 – see page 18-71	
Length (L)	5.25 in (133 mm)
Width (W)	1.25 in (32 mm)
Mounting dimensions	
Mount Length (M)	4.6 in (117 mm)
Mount Width (X or F)	
Mount Slots (MS)	0.25 in (6 mm)
A	2.0
B	4.0
Weight	6.20 lbs
Exit Type	Side
Nominal Length	2.7 in (70 mm)
Frame Size (H x L)	2.813 in x 3.939 in

Specifications by lamp and line voltage

Lamp	Specifications by line voltage				
S54		**120**	**208**	**240**	**277**
100W High Pressure Sodium	System Wattage (W)	123	123	123	123
	Nominal Current	2.20 A	1.30 A	1.10 A	0.90 A
150W High Pressure Sodium	Ballast Factor	1	1	1	1
	Ballast Efficiency Factor	1.22	1.22	1.22	1.22
	Max Input Current	2.18 A	1.27 A	1.13 A	0.94 A
	Starting Current	0.74 A	0.43 A	0.36 A	0.31 A
	Open Circuit Voltage	119V	119V	119V	119V
	Drop Out Voltage	96V	166V	192V	222V
	Power Factor (>=)%	90	90	90	90
	Min. Starting Temp (°F/°C)	-22 / -30	-22 / -30	-22 / -30	-22 / -30
	Fuse Rating	8	5	5	3
	UL Bench Top Rise	B	B	B	B

Safety and performance cUL Listed UL Listed

See page E-1 for warranty information.

78535 – GES100TRILC3-5

High Pressure Sodium

1 – 100W HPS S54 Tri Tap (120/277/347V)

- Magnetic ballast construction ideal for a wide variety of lighting applications
- Precision-wound coils, ensuring even heat dissipation and the highest electrical integrity
- Distributor replacement kit contains the appropriate core and coil with color coded leads, a properly rated capacitor and ignitor (if required) and all other components required for ballast replacement
- Tri Tap ballast (120/277/347)

General characteristics

Ballast Type	Magnetic – Core and Coil
ANSI Lamp Codes	S54
Voltage	120/277/347
Line Voltage Regulation (+/-)	5%
Circuit Type	HX-HPF
Insulation Class	Class N, 200C
Type of Capacitor	Dry film
Capacitance	10 Mfd GECAP-10/400V-O
Voltage (MIN)	300
Capacitor Temperature Rating	105°C (221°F)
GE Igniter	HPS150-3A
Sound Rating	
Additional Info	

Electrical characteristics

Supply Current Frequency	60 Hz

Order information

Type	No. Items Per Sales Unit	No. Items Per Standard Package
Distributor Kit	1	6

Dimensions

Wiring diagram HID W-(L) – see example on page 18-69	
Case dimensions – Ref Drawing PC1 – see page 18-71	
Length (L)	5.25 in (133 mm)
Width (W)	1.25 in (32 mm)
Mounting dimensions	
Mount Length (M)	
Mount Width (X or F)	
Mount Slots (MS)	
A	2.00 in (38 mm)
B	3.47 in (75 mm)
Weight	6.38 lbs
Exit Type	Side
Nominal Length	3.54 in (90 mm)
Frame Size (H x L)	2.82 in (72 mm) x 3.94 in (101 mm)

Specifications by lamp and line voltage

Lamp	Specifications by line voltage			
S54		**120**	**277**	**347**
100W HPS	System Wattage (W)	129	129	129
	Nominal Current	1.16 A	0.50 A	0.40 A
	Ballast Factor	1	1	1
	Ballast Efficiency Factor	0.78	0.78	0.78
	Max Input Current	1.16 A	.55 A	.44 A
	Starting Current	2.80 A	2.80 A	2.80 A
	Open Circuit Voltage	120V	120V	120V
	Drop Out Voltage	102V	235V	295V
	Power Factor (>=)%	90	90	90
	Min. Starting Temp (°F/°C)	-40 / -40	-40 / -40	-40 / -40
	Fuse Rating	3	2	1.5
	UL Bench Top Rise	A	A	A

Safety and performance

cUL Listed UL Listed

67338 – GES10048TLA3D-5/2

High Pressure Sodium

1 – 100W HPS S54 480V

- Magnetic ballast construction ideal for a wide variety of lighting applications
- Precision-wound coils, ensuring even heat dissipation and the highest electrical integrity
- Distributor replacement kit contains the appropriate core and coil with color coded leads, a properly rated capacitor and ignitor (if required) and all other components required for ballast replacement

General characteristics

Ballast Type	Magnetic – Core and Coil
ANSI Lamp Codes	S54
Voltage	480
Line Voltage Regulation (+/-)	5%
Circuit Type	HX-HPF
Insulation Class	Class H, 180°C or Class N, 200°C
Type of Capacitor	Dry film
Capacitance	10 Mfd GECAP-10/400V-O
Voltage (MIN)	300
Capacitor Temperature Rating	105°C (221°F)
GE Igniter	HPS150-3A
Sound Rating	
Additional Info	

Electrical characteristics

Supply Current Frequency	60 Hz

Order information

Type	No. Items Per Sales Unit	No. Items Per Standard Package
Distributor Kit	1	6

Dimensions

Wiring diagram HID W-(F) – see example on page 18-68	
Case dimensions – Ref Drawing PC1 – see page 18-71	
Length (L)	5.25 in (133 mm)
Width (W)	1.25 in (32 mm)
Mounting dimensions	
Mount Length (M)	4.6 in (117 mm)
Mount Width (X or F)	
Mount Slots (MS)	0.25 in (6 mm)
A	2.0
B	3.10
Weight	6.20 lbs
Exit Type	Side
Nominal Length	2.7 in (69 mm)
Frame Size (H x L)	2.813 in x 3.939 in

Specifications by lamp and line voltage

Lamp	Specifications by line voltage	
S54		**480**
100W High Pressure Sodium	System Wattage (W)	125
	Nominal Current	0.29 A
	Ballast Factor	1
150W High Pressure Sodium	Ballast Efficiency Factor	0.79
	Max Input Current	0.29 A
	Starting Current	2.85 A
	Open Circuit Voltage	120V
	Drop Out Voltage	170V
	Power Factor (>=)%	90
	Min. Starting Temp (°F/°C)	-20 / -30
	Fuse Rating	1
	UL Bench Top Rise	A

Safety and performance

cUL Listed UL Listed

High Pressure Sodium

HID Electronic and Electromagnetic For 50 – 150W High Pressure Sodium HID Lamps

87094 – GES150MLTLC3D-5

High Pressure Sodium

1 – 150W HPS S55 Quad (120/208/240/277V)

- Magnetic ballast construction ideal for a wide variety of lighting applications
- Precision-wound coils, ensuring even heat dissipation and the highest electrical integrity
- Distributor replacement kit contains the appropriate core and coil with color coded leads, a properly rated capacitor and ignitor (if required) and all other components required for ballast replacement
- Quad ballast (120, 208, 240, 277)

General characteristics

Ballast Type	Magnetic – Core and Coil
ANSI Lamp Codes	S55
Voltage	120/208/240/277
Line Voltage Regulation (+/-)	5%
Circuit Type	HX-HPF
Insulation Class	180C
Type of Capacitor	Dry film
Capacitance	14 Mfd GECAP-14/280V-D
Voltage (MIN)	280
Capacitor Temperature Rating	100°C (212°F)
GE Igniter	HPS150-3A
Sound Rating	
Additional Info	

Dimensions

Wiring diagram HID W-(H) – see example on page 18-68	
Case dimensions – Ref Drawing PC1 – see page 18-71	
Length (L)	5.25 in (133 mm)
Width (W)	1.25 in (32 mm)
Mounting dimensions	
Mount Length (M)	4.6 in (117 mm)
Mount Width (X or F)	
Mount Slots (MS)	0.25 in (6 mm)
A	3.0
B	4.0
Weight	7.60 lbs
Exit Type	Side
Nominal Length	2.7 in (69 mm)
Frame Size (H x L)	2.813 in x 3.939 in

Electrical characteristics

Supply Current Frequency	60 Hz

Order information

Type	No. Items Per Sales Unit	No. Items Per Standard Package
Distributor Kit	1	6

Specifications by lamp and line voltage

Lamp	Specifications by line voltage				
S55		**120**	**208**	**240**	**277**
150W High Pressure Sodium	System Wattage (W)	175	175	175	175
	Nominal Current	1.60 A	0.90 A	0.80 A	0.70 A
250W Quartz Metal Halide	Ballast Factor	1	1	1	1
	Ballast Efficiency Factor	1.43	1.43	1.43	1.43
	Max Input Current	2.72 A	1.53 A	1.34 A	1.16 A
	Starting Current	1.64 A	0.88 A	0.76 A	0.65 A
	Open Circuit Voltage	115V	115V	115V	115V
	Drop Out Voltage	96V	166V	192V	222V
	Power Factor (>=)%	90	90	90	90
	Min. Starting Temp (°F/°C)	-22 / -30	-22 / -30	-22 / -30	-22 / -30
	Fuse Rating	10	5	5	5
	UL Bench Top Rise	B	B	B	B

Safety and performance cUL Listed UL Listed

78536 – GES150TRILC3-5

High Pressure Sodium

1 – 150W HPS S55 Tri Tap (120/277/347V)

- Magnetic ballast construction ideal for a wide variety of lighting applications
- Precision-wound coils, ensuring even heat dissipation and the highest electrical integrity
- Distributor replacement kit contains the appropriate core and coil with color coded leads, a properly rated capacitor and ignitor (if required) and all other components required for ballast replacement
- Tri Tap ballast (120/277/347)

General characteristics

Ballast Type	Magnetic – Core and Coil
ANSI Lamp Codes	S55
Voltage	120/277/347
Line Voltage Regulation (+/-)	5%
Circuit Type	HX-HPF
Insulation Class	Class N, 200C
Type of Capacitor	Dry film
Capacitance	14 Mfd GECAP-14/280V-D
Voltage (MIN)	300
Capacitor Temperature Rating	105°C (221°F)
GE Igniter	HPS150-3A
Sound Rating	
Additional Info	

Dimensions

Wiring diagram HID W-(L) – see example on page 18-69	
Case dimensions – Ref Drawing PC1 – see page 18-71	
Length (L)	5.25 in (133 mm)
Width (W)	1.25 in (32 mm)
Mounting dimensions	
Mount Length (M)	
Mount Width (X or F)	
Mount Slots (MS)	
A	2.48 in (63 mm)
B	4.94 in (126 mm)
Weight	7.83 lbs
Exit Type	Side
Nominal Length	3.54 in (90 mm)
Frame Size (H x L)	2.82 in (72 mm) x 3.94 in (101 mm)

Electrical characteristics

Supply Current Frequency	60 Hz

Order information

Type	No. Items Per Sales Unit	No. Items Per Standard Package
Distributor Kit	1	6

Specifications by lamp and line voltage

Lamp	Specifications by line voltage			
S55		**120**	**277**	**347**
150W HPS	System Wattage (W)	190	190	190
	Nominal Current	1.66 A	0.72 A	0.58 A
	Ballast Factor	1	1	1
	Ballast Efficiency Factor	0.79	0.79	0.79
	Max Input Current	1.83 A	.80 A	.64 A
	Starting Current	4.10 A	4.10 A	4.10 A
	Open Circuit Voltage	120V	120V	120V
	Drop Out Voltage	102V	235V	295V
	Power Factor (>=)%	90	90	90
	Min. Starting Temp (°F/°C)	-40 / -40	-40 / -40	-40 / -40
	Fuse Rating	5	3	2
	UL Bench Top Rise	A	A	A

Safety and performance cUL Listed UL Listed

See page E-1 for warranty information.

67339 – GES15048TLA3D-5/2

High Pressure Sodium

1 – 150W HPS S55 480V

- Magnetic ballast construction ideal for a wide variety of lighting applications
- Precision-wound coils, ensuring even heat dissipation and the highest electrical integrity
- Distributor replacement kit contains the appropriate core and coil with color coded leads, a properly rated capacitor and ignitor (if required) and all other components required for ballast replacement

General characteristics

Ballast Type	Magnetic – Core and Coil
ANSI Lamp Codes	S55
Voltage	480
Line Voltage Regulation (+/-)	5%
Circuit Type	HX-HPF
Insulation Class	Class H, 180°C or Class N, 200°C
Type of Capacitor	Dry film
Capacitance	14 Mfd GECAP-14/280V-D
Voltage (MIN)	300
Capacitor Temperature Rating	100°C (212°F)
GE Igniter	HPS150-3A 86635
Sound Rating	
Additional Info	

Electrical characteristics

Supply Current Frequency	60 Hz

Order information

Type	No. Items Per Sales Unit	No. Items Per Standard Package
Distributor Kit	1	6

Specifications by lamp and line voltage

Lamp	Specifications by line voltage	
S55		480
150W High Pressure Sodium	System Wattage (W)	190
	Nominal Current	0.42 A
250W Quartz Metal Halide	Ballast Factor	1
	Ballast Efficiency Factor	0.78
	Max Input Current	0.42 A
	Starting Current	4.10 A
	Open Circuit Voltage	120V
	Drop Out Voltage	170V
	Power Factor (>=)%	90
	Min. Starting Temp (°F/°C)	-20 / -30
	Fuse Rating	2
	UL Bench Top Rise	A or D

Safety and performance

UL Listed

Dimensions

Wiring diagram HID W-(F) – see example on page 18-68	
Case dimensions – Ref Drawing PC1 – see page 18-71	
Length (L)	5.25 in (133 mm)
Width (W)	1.25 in (32 mm)
Mounting dimensions	
Mount Length (M)	4.6 in (117 mm)
Mount Width (X or F)	
Mount Slots (MS)	0.25 in (6 mm)
A	2.65
B	4.0
Weight	8.00 lbs
Exit Type	Side
Nominal Length	2.7 in (69 mm)
Frame Size (H x L)	2.813 in x 3.939 in

See page E-1 for warranty information.

High Pressure Sodium

HID Electronic and Electromagnetic For 250 – 1000W High Pressure Sodium HID Lamps

87214 – GES250ML5AA4-5

High Pressure Sodium

1 – 250W HPS S50 5-Tap (120/208/240/277/480V)

- Magnetic ballast construction ideal for a wide variety of lighting applications
- Precision-wound coils, ensuring even heat dissipation and the highest electrical integrity
- Distributor replacement kit contains the appropriate core and coil with color coded leads, a properly rated capacitor and ignitor (if required) and all other components required for ballast replacement
- 5-tap ballast (120, 208, 240, 277, or 480 volt) featuring a 480-volt tap

General characteristics

Ballast Type	Magnetic – Core and Coil
ANSI Lamp Codes	S50
Voltage	120/208/240/277/480
Line Voltage Regulation (+/-)	10%
Circuit Type	CWA
Insulation Class	180C
Type of Capacitor	Oil filled
Capacitance	35 Mfd GECAP-35/240V-O
Voltage (MIN)	240
Capacitor Temperature Rating	100°C (212°F)
GE Igniter	HPS400-3A
Sound Rating	
Additional Info	

Electrical characteristics

Supply Current Frequency	60 Hz

Order information

Type	No. Items Per Sales Unit	No. Items Per Standard Package
Distributor Kit	1	3

Dimensions

Wiring diagram HID W-(B) – see example on page 18-68	
Case dimensions – Ref-Drawing PC2 – see page 18-71	
Length (L)	5.25 in (133 mm)
Width (W)	1.25 in (32 mm)
Mounting dimensions	
Mount Length (M)	4.6 in (117 mm)
Mount Width (X or F)	
Mount Slots (MS)	0.25 in (6 mm)
A	2.0
B	4.0
Weight	12.00 lbs
Exit Type	Side
Nominal Length	3.7 in (95 mm)
Frame Size (H x L)	4.25 in x 4.75 in
Lead lengths	
Orange	
Violet and Black	
Violet/White	
Black/Yellow	

Specifications by lamp and line voltage

Lamp	Specifications by line voltage					
S50		**120**	**208**	**240**	**277**	**480**
250W High Pressure Sodium	System Wattage (W)	292	292	292	292	292
	Nominal Current	2.50 A	1.50 A	1.30 A	1.10 A	0.60 A
	Ballast Factor	1	1	1	1	1
	Ballast Efficiency Factor	0.86	0.86	0.86	0.86	0.86
	Max Input Current	2.50 A	1.50 A	1.30 A	1.10 A	0.60 A
	Starting Current	1.59 A	0.93 A	0.81 A	0.70 A	0.40 A
	Open Circuit Voltage	186V	186V	186V	186V	186V
	Drop Out Voltage	96V	166V	192V	222V	384V
	Power Factor (>=)%	90	90	90	90	90
	Min. Starting Temp (°F/°C)	-22 / -30	-22 / -30	-22 / -30	-22 / -30	-22 / -30
	Fuse Rating	8	5	4	4	4
	UL Bench Top Rise	C	C	B	B	B

Safety and performance cUL Listed UL Listed

87121 – GES250MLTAC4-5

High Pressure Sodium

1 – 250W HPS S50 Quad (120/208/240/277V)

- Magnetic ballast construction ideal for a wide variety of lighting applications
- Precision-wound coils, ensuring even heat dissipation and the highest electrical integrity
- Distributor replacement kit contains the appropriate core and coil with color coded leads, a properly rated capacitor and ignitor (if required) and all other components required for ballast replacement
- Quad ballast (120, 208, 240, 277)

General characteristics

Ballast Type	Magnetic – Core and Coil
ANSI Lamp Codes	S50
Voltage	120/208/240/277
Line Voltage Regulation (+/-)	10%
Circuit Type	CWA
Insulation Class	180C
Type of Capacitor	Oil filled
Capacitance	35 Mfd GECAP-35/240V-O
Voltage (MIN)	240
Capacitor Temperature Rating	100°C (212°F)
GE Igniter	HPS400-3A
Sound Rating	
Additional Info	

Electrical characteristics

Supply Current Frequency	60 Hz

Order information

Type	No. Items Per Sales Unit	No. Items Per Standard Package
Distributor Kit	1	3

Dimensions

Wiring diagram HID W-(A) – see example on page 18-68	
Case dimensions – Ref Drawing PC2 – see page 18-71	
Length (L)	5.25 in (133 mm)
Width (W)	1.25 in (32 mm)
Mounting dimensions	
Mount Length (M)	4.6 in (117 mm)
Mount Width (X or F)	
Mount Slots (MS)	0.25 in (6 mm)
A	2.0
B	4.0
Weight	11.00 lbs
Exit Type	Side
Nominal Length	3.7 in (95 mm)
Frame Size (H x L)	4.25 in x 4.75 in

Specifications by lamp and line voltage

Lamp	Specifications by line voltage				
S50		**120**	**208**	**240**	**277**
250W High Pressure Sodium	System Wattage (W)	303	303	303	303
	Nominal Current	2.60 A	1.50 A	1.30 A	1.10 A
	Ballast Factor	1	1	1	1
	Ballast Efficiency Factor	0.83	0.83	0.83	0.83
	Max Input Current	2.60 A	1.50 A	1.30 A	1.10 A
	Starting Current	1.50 A	0.86 A	0.75 A	0.63 A
	Open Circuit Voltage	186V	186V	186V	186V
	Drop Out Voltage	96V	166V	192V	222V
	Power Factor (>=)%	90	90	90	90
	Min. Starting Temp (°F/°C)	-22 / -30	-22 / -30	-22 / -30	-22 / -30
	Fuse Rating	8	5	4	4
	UL Bench Top Rise	A	A	A	A

Safety and performance cUL Listed UL Listed

See page E-1 for warranty information.

78537 – GES250TRIAC4-5

High Pressure Sodium

1 – 250W HPS S50 Tri Tap (120/277/347V)

- Magnetic ballast construction ideal for a wide variety of lighting applications
- Precision-wound coils, ensuring even heat dissipation and the highest electrical integrity
- Distributor replacement kit contains the appropriate core and coil with color coded leads, a properly rated capacitor and ignitor (if required) and all other components required for ballast replacement
- Tri Tap ballast (120/277/347)

General characteristics

Ballast Type	Magnetic – Core and Coil
ANSI Lamp Codes	S50
Voltage	120/277/347
Line Voltage Regulation (+/-)	10%
Circuit Type	CWA
Insulation Class	Class N, 200C
Type of Capacitor	Oil filled
Capacitance	33 Mfd
Voltage (MIN)	300
Capacitor Temperature Rating	105°C (221°F)
GE Igniter	HPS400-3A
Sound Rating	
Additional Info	

Electrical characteristics

Supply Current Frequency	50 Hz/60 Hz

Order information

Type	No. Items Per Sales Unit	No. Items Per Standard Package
Distributor Kit	1	3

Dimensions

Wiring diagram HID W-(L) – see example on page 18-69	
Case dimensions – Ref Drawing PC2 – see page 18-71	
Length (L)	5.25 in (133 mm)
Width (W)	1.25 in (32 mm)
Mounting dimensions	
Mount Length (M)	
Mount Width (X or F)	
Mount Slots (MS)	
A	1.62 in (41 mm)
B	3.50 in (89 mm)
Weight	10.16 lbs
Exit Type	Side
Nominal Length	4.37 in (111 mm)
Frame Size (H x L)	4.25 in (108 mm) x 4.75 in (121 mm)

Specifications by lamp and line voltage

Lamp	Specifications by line voltage			
S50		**120**	**277**	**347**
250W	System Wattage (W)	295	295	295
HPS	Nominal Current	2.55 A	1.10 A	0.88 A
	Ballast Factor	1	1	1
	Ballast Efficiency Factor	0.84	0.84	0.84
	Max Input Current	2.80 A	1.21 A	.97 A
	Starting Current	4.0 A	4.0 A	4.0 A
	Open Circuit Voltage	120V	120V	120V
	Drop Out Voltage	84V	194V	243V
	Power Factor (>=)%	90	90	90
	Min. Starting Temp (°F/°C)	-40 / -40	-40 / -40	-40 / -40
	Fuse Rating	8	3	3
	UL Bench Top Rise	A	A	B

Safety and performance cUL Listed UL Listed

63066 – GES400ML5AA4-5 (replaces 87215)

High Pressure Sodium

1 – 400W HPS S51 5-Tap (120/208/240/277/480V)

- Magnetic ballast construction ideal for a wide variety of lighting applications
- Precision-wound coils, ensuring even heat dissipation and the highest electrical integrity
- Distributor replacement kit contains the appropriate core and coil with color coded leads, a properly rated capacitor and ignitor (if required) and all other components required for ballast replacement
- 5-tap ballast (120, 208, 240, 277, or 480 volt) featuring a 480-volt tap

General characteristics

Ballast Type	Magnetic – Core and Coil
ANSI Lamp Codes	S51
Voltage	120/208/240/277/480
Line Voltage Regulation (+/-)	10%
Circuit Type	CWA
Insulation Class	180C
Type of Capacitor	Oil filled
Capacitance	55 Mfd GECAP-55/240V-O
Voltage (MIN)	240
Capacitor Temperature Rating	100°C (212°F)
GE Igniter	HPS400-3A 86641
Sound Rating	
Additional Info	

Electrical characteristics

Supply Current Frequency	60 Hz

Order information

Type	No. Items Per Sales Unit	No. Items Per Standard Package
Distributor Kit	1	3

Dimensions

Wiring diagram HID W-(B) – see example on page 18-68	
Case dimensions – Ref Drawing PC2 – see page 18-71	
Length (L)	5.25 in (133 mm)
Width (W)	1.25 in (32 mm)
Mounting dimensions	
Mount Length (M)	4.6 in (117 mm)
Mount Width (X or F)	
Mount Slots (MS)	0.25 in (6 mm)
A	2.0
B	4.0
Weight	15.00 lbs
Exit Type	Side
Nominal Length	4.2 in (108 mm)
Frame Size (H x L)	4.25 in x 4.75 in
Lead lengths	
Orange	
Violet and Black	
Violet/White	
Black/Yellow	

Specifications by lamp and line voltage

Lamp	Specifications by line voltage					
S51		**120**	**208**	**240**	**277**	**480**
400W High	System Wattage (W)	472	472	472	472	472
Pressure Sodium	Nominal Current	4.00 A	2.20 A	2.00 A	1.70 A	1.00 A
	Ballast Factor	1	1	1	1	1
	Ballast Efficiency Factor	0.85	0.85	0.85	0.85	0.85
	Max Input Current	4.00 A	2.20 A	2.00 A	1.70 A	1.00 A
	Starting Current	2.87 A	1.66 A	1.44 A	1.25 A	0.72 A
	Open Circuit Voltage	191V	191V	191V	191V	191V
	Drop Out Voltage	96V	166V	192V	222V	384V
	Power Factor (>=)%	90	90	90	90	90
	Min. Starting Temp (°F/°C)	-22 / -30	-22 / -30	-22 / -30	-22 / -30	-22 / -30
	Fuse Rating	15	8	8	5	5
	UL Bench Top Rise	C	C	C	C	C

Safety and performance cUL Listed UL Listed

See page E-1 for warranty information.

High Pressure Sodium
HID Electronic and Electromagnetic For 250 – 1000W High Pressure Sodium HID Lamps

87164 – GES400MLTAC4-5

High Pressure Sodium

1 – 400W HPS S51 Quad (120/208/240/277V)

- Magnetic ballast construction ideal for a wide variety of lighting applications
- Precision-wound coils, ensuring even heat dissipation and the highest electrical integrity
- Distributor replacement kit contains the appropriate core and coil with color coded leads, a properly rated capacitor and ignitor (if required) and all other components required for ballast replacement
- Quad ballast (120, 208, 240, 277)

General characteristics

Ballast Type	Magnetic – Core and Coil
ANSI Lamp Codes	S51
Voltage	120/208/240/277
Line Voltage Regulation (+/-)	10%
Circuit Type	CWA
Insulation Class	180C
Type of Capacitor	Oil filled
Capacitance	55 Mfd GECAP-55/240V-O
Voltage (MIN)	240
Capacitor Temperature Rating	100°C (212°F)
GE Igniter	HPS400-3A 86641
Sound Rating	
Additional Info	

Electrical characteristics

Supply Current Frequency	60 Hz

Order information

Type	No. Items Per Sales Unit	No. Items Per Standard Package
Distributor Kit	1	3

Dimensions

Wiring diagram HID W-(A) – see example on page 18-68	
Case dimensions – Ref Drawing PC2 – see page 18-71	
Length (L)	5.25 in (133 mm)
Width (W)	1.25 in (32 mm)
Mounting dimensions	
Mount Length (M)	4.6 in (117 mm)
Mount Width (X or F)	
Mount Slots (MS)	0.25 in (6 mm)
A	2.0
B	4.0
Weight	13.60 lbs
Exit Type	Side
Nominal Length	4.2 in (108 mm)
Frame Size (H x L)	4.25 in x 4.75 in

Specifications by lamp and line voltage

Lamp	Specifications by line voltage				
S51		**120**	**208**	**240**	**277**
400W High Pressure Sodium	System Wattage (W)	443	443	443	443
	Nominal Current	3.80 A	2.20 A	1.90 A	1.60 A
	Ballast Factor	1	1	1	1
	Ballast Efficiency Factor	0.90	0.90	0.90	0.90
	Max Input Current	3.80 A	2.20 A	1.90 A	1.60 A
	Starting Current	1.78 A	1.03 A	0.90 A	0.77 A
	Open Circuit Voltage	186V	186V	186V	186V
	Drop Out Voltage	96V	166V	192V	222V
	Power Factor (>=)%	90	90	90	90
	Min. Starting Temp (°F/°C)	-22 / -30	-22 / -30	-22 / -30	-22 / -30
	Fuse Rating	15	8	8	5
	UL Bench Top Rise	D	D	D	D

Safety and performance cUL Listed UL Listed

78539 – GES400TRIAC4-5

High Pressure Sodium

1 – 400W HPS S51 Tri Tap (120/277/347V)

- Magnetic ballast construction ideal for a wide variety of lighting applications
- Precision-wound coils, ensuring even heat dissipation and the highest electrical integrity
- Distributor replacement kit contains the appropriate core and coil with color coded leads, a properly rated capacitor and ignitor (if required) and all other components required for ballast replacement
- Tri Tap ballast (120/277/347)

General characteristics

Ballast Type	Magnetic – Core and Coil
ANSI Lamp Codes	S51
Voltage	120/277/347
Line Voltage Regulation (+/-)	10%
Circuit Type	CWA
Insulation Class	Class N, 200C
Type of Capacitor	Oil filled
Capacitance	55 Mfd GECAP-55/240V-O
Voltage (MIN)	300
Capacitor Temperature Rating	105°C (221°F)
GE Igniter	HPS400-3A
Sound Rating	
Additional Info	

Electrical characteristics

Supply Current Frequency	50 Hz/60 Hz

Order information

Type	No. Items Per Sales Unit	No. Items Per Standard Package
Distributor Kit	1	3

Dimensions

Wiring diagram HID W-(L) – see example on page 18-69	
Case dimensions – Ref Drawing PC2 – see page 18-71	
Length (L)	5.25 in (133 mm)
Width (W)	1.25 in (32 mm)
Mounting dimensions	
Mount Length (M)	
Mount Width (X or F)	
Mount Slots (MS)	
A	2.33 in (59 mm)
B	4.21 in (107 mm)
Weight	13.91 lbs
Exit Type	Side
Nominal Length	4.37 in (111 mm)
Frame Size (H x L)	4.25 in (108 mm) x 4.75 in (121 mm)

Specifications by lamp and line voltage

Lamp	Specifications by line voltage			
S51		**120**	**277**	**347**
400W HPS	System Wattage (W)	465	465	465
	Nominal Current	4.0 A	1.75 A	1.40 A
	Ballast Factor	1	1	1
	Ballast Efficiency Factor	0.85	0.85	0.85
	Max Input Current	4.4 A	1.93 A	1.54 A
	Starting Current	6.50 A	6.50 A	6.50 A
	Open Circuit Voltage	186V	186V	186V
	Drop Out Voltage	84V	194V	243V
	Power Factor (>=)%	90	90	90
	Min. Starting Temp (°F/°C)	-40 / -40	-40 / -40	-40 / -40
	Fuse Rating	12	6	4
	UL Bench Top Rise	D	D	D

Safety and performance cUL Listed UL Listed

See page E-1 for warranty information.

87198 – GES40048TAC4-5

High Pressure Sodium

1 – 400W HPS S51 480V in smaller frame

- Magnetic ballast construction ideal for a wide variety of lighting applications
- Precision-wound coils, ensuring even heat dissipation and the highest electrical integrity
- Distributor replacement kit contains the appropriate core and coil with color coded leads, a properly rated capacitor and ignitor (if required) and all other components required for ballast replacement

General characteristics

Ballast Type	Magnetic – Core and Coil
ANSI Lamp Codes	S51
Voltage	480
Line Voltage Regulation (+/-)	10%
Circuit Type	CWA
Insulation Class	180C
Type of Capacitor	Oil filled
Capacitance	55 Mfd GECAP-55/240V-O
Voltage (MIN)	240
Capacitor Temperature Rating	100°C (212°F)
GE Igniter	HPS400-3A
Sound Rating	
Additional Info	

Electrical characteristics

Supply Current Frequency	60 Hz

Order information

Type	No. Items Per Sales Unit	No. Items Per Standard Package
Distributor Kit	1	3

Specifications by lamp and line voltage

Lamp	Specifications by line voltage	
S51		**480**
400W High Pressure Sodium	System Wattage (W)	475
	Nominal Current	1.00 A
	Ballast Factor	1
	Ballast Efficiency Factor	0.84
	Max Input Current	1.00 A
	Starting Current	0.60 A
	Open Circuit Voltage	195V
	Drop Out Voltage	384V
	Power Factor (>=)%	90
	Min. Starting Temp (°F/°C)	-22 / -30
	Fuse Rating	5
	UL Bench Top Rise	D

Dimensions

Wiring diagram HID W-(D) – see example on page 18-68	
Case dimensions – Ref Drawing PC2 – see page 18-71	
Length (L)	5.25 in (133 mm)
Width (W)	1.25 in (32 mm)
Mounting dimensions	
Mount Length (M)	4.6 in (117 mm)
Mount Width (X or F)	
Mount Slots (MS)	0.25 in (6 mm)
A	2.3
B	4.1
Weight	15.00 lbs
Exit Type	Side
Nominal Length	4.2 in (108 mm)
Frame Size (H x L)	4.25 in x 4.75 in

Safety and performance

cUL Listed UL Listed

67351 – GES100048TAA5-5/2

High Pressure Sodium

1 – 1000W HPS S52 480V

- Magnetic ballast construction ideal for a wide variety of lighting applications
- Precision-wound coils, ensuring even heat dissipation and the highest electrical integrity
- Distributor replacement kit contains the appropriate core and coil with color coded leads, a properly rated capacitor and ignitor (if required) and all other components required for ballast replacement

General characteristics

Ballast Type	Magnetic – Core and Coil
ANSI Lamp Codes	S52
Voltage	480
Line Voltage Regulation (+/-)	10%
Circuit Type	CWA
Insulation Class	Class H, 180°C or Class N, 200°C
Type of Capacitor	Oil filled
Capacitance	26 Mfd GECAP-26/525V-O
Voltage (MIN)	540
Capacitor Temperature Rating	105°C (221°F)
GE Igniter	HPS 1000-48
Sound Rating	
Additional Info	

Electrical characteristics

Supply Current Frequency	60 Hz

Order information

Type	No. Items Per Sales Unit	No. Items Per Standard Package
Distributor Kit	1	2

Specifications by lamp and line voltage

Lamp	Specifications by line voltage	
S52		**480**
1000W High Pressure Sodium	System Wattage (W)	1,110
	Nominal Current	2.38 A
	Ballast Factor	1
	Ballast Efficiency Factor	0.90
	Max Input Current	2.38 A
	Starting Current	6.80 A
	Open Circuit Voltage	440V
	Drop Out Voltage	870V
	Power Factor (>=)%	90
	Min. Starting Temp (°F/°C)	-20 / -30
	Fuse Rating	5
	UL Bench Top Rise	A or D

Dimensions

Wiring diagram HID W-(D) – see example on page 18-68	
Case dimensions – Ref Drawing PC3 – see page 18-71	
Length (L)	7.75 in (197 mm)
Width (W)	2.75 in (70 mm)
Mounting dimensions	
Mount Length (M)	6.1 in (155 mm)
Mount Width (X or F)	
Mount Slots (MS)	0.25 in (6 mm)
A	4.5
B	6.6
Weight	28.60 lbs
Exit Type	Side
Nominal Length	4.7 in (121 mm)
Frame Size (H x L)	4.25 in x 6.00 in

Safety and performance

cUL Listed UL Listed

See page E-1 for warranty information.

High Pressure Sodium

HID Electronic and Electromagnetic For 250 – 1000W High Pressure Sodium HID Lamps

87218 – GES1000ML5AA5-5

High Pressure Sodium

1 – 1000W HPS S52 5-Tap (120/208/240/277/480V)

- Magnetic ballast construction ideal for a wide variety of lighting applications
- Precision-wound coils, ensuring even heat dissipation and the highest electrical integrity
- Distributor replacement kit contains the appropriate core and coil with color coded leads, a properly rated capacitor and ignitor (if required) and all other components required for ballast replacement
- 5-tap ballast (120, 208, 240, 277, or 480 volt) featuring a 480-volt tap

General characteristics

Ballast Type	Magnetic – Core and Coil
ANSI Lamp Codes	S52
Voltage	120/208/240/277/480
Line Voltage Regulation (+/-)	10%
Circuit Type	CWA
Insulation Class	180C
Type of Capacitor	Oil filled
Capacitance	26 Mfd GECAP-26/525V-O
Voltage (MIN)	525
Capacitor Temperature Rating	100°C (212°F)
GE Igniter	HPS1000-4B
Sound Rating	
Additional Info	

Electrical characteristics

Supply Current Frequency	60 Hz

Order information

Type	No. Items Per Sales Unit	No. Items Per Standard Package
Distributor Kit	1	2

Dimensions

Wiring diagram HID W-(B) – see example on page 18-68	
Case dimensions – Ref Drawing PC3 – see page 18-71	
Length (L)	7.75 in (197 mm)
Width (W)	2.75 in (70 mm)
Mounting dimensions	
Mount Length (M)	6.1 in (155 mm)
Mount Width (X or F)	
Mount Slots (MS)	0.25 in (6 mm)
A	4.0
B	6.0
Weight	28.00 lbs
Exit Type	Side
Nominal Length	4.7 in (121 mm)
Frame Size (H x L)	4.25 in x 6.00 in
Lead lengths	
Orange	
Violet and Black	
Violet/White	
Black/Yellow	

Specifications by lamp and line voltage

Lamp	Specifications by line voltage					
S52		**120**	**208**	**240**	**277**	**480**
1000W High Pressure Sodium	System Wattage (W)	1,102	1,102	1,102	1,102	1,102
	Nominal Current	9.50 A	5.50 A	4.70 A	4.10 A	2.40 A
	Ballast Factor	1	1	1	1	1
	Ballast Efficiency Factor	0.91	0.91	0.91	0.91	0.91
	Max Input Current	9.50 A	5.50 A	4.70 A	4.10 A	2.40 A
	Starting Current	5.75 A	3.40 A	2.90 A	2.60 A	1.80 A
	Open Circuit Voltage	435V	435V	435V	435V	435V
	Drop Out Voltage	96V	166V	192V	222V	384V
	Power Factor (>=)%	90	90	90	90	90
	Min. Starting Temp (°F/°C)	-22 / -30	-22 / -30	-22 / -30	-22 / -30	-22 / -30
	Fuse Rating	20	15	10	10	8
	UL Bench Top Rise	D	D	D	D	D

Safety and performance cUL Listed UL Listed

67352 – GES1000MLTAA5-5/2

High Pressure Sodium

1 – 1000W HPS S52 Quad (120/208/240/277V)

- Magnetic ballast construction ideal for a wide variety of lighting applications
- Precision-wound coils, ensuring even heat dissipation and the highest electrical integrity
- Distributor replacement kit contains the appropriate core and coil with color coded leads, a properly rated capacitor and ignitor (if required) and all other components required for ballast replacement
- Quad ballast (120, 208, 240, 277)

General characteristics

Ballast Type	Magnetic – Core and Coil
ANSI Lamp Codes	S52
Voltage	120/208/240/277
Line Voltage Regulation (+/-)	10%
Circuit Type	CWA
Insulation Class	Class H, 180°C or Class N, 200°C
Type of Capacitor	Oil filled
Capacitance	26 Mfd GECAP-26/525V-O
Voltage (MIN)	540
Capacitor Temperature Rating	105°C (221°F)
GE Igniter	HPS1000-4B
Sound Rating	
Additional Info	

Electrical characteristics

Supply Current Frequency	60 Hz

Order information

Type	No. Items Per Sales Unit	No. Items Per Standard Package
Distributor Kit	1	2

Dimensions

Wiring diagram HID W-(A) – see example on page 18-68	
Case dimensions – Ref Drawing PC3 – see page 18-71	
Length (L)	7.75 in (197 mm)
Width (W)	2.75 in (70 mm)
Mounting dimensions	
Mount Length (M)	6.1 in (155 mm)
Mount Width (X or F)	
Mount Slots (MS)	0.25 in (6 mm)
A	4.5
B	6.6
Weight	28.60 lbs
Exit Type	Side
Nominal Length	4.7 in (121 mm)
Frame Size (H x L)	4.25 in x 6.00 in

Specifications by lamp and line voltage

Lamp	Specifications by line voltage				
S52		**120**	**208**	**240**	**277**
1000W High Pressure Sodium	System Wattage (W)	1,110	1,110	1,110	1,110
	Nominal Current	9.50 A	5.50 A	4.75 A	4.10A
	Ballast Factor	1	1	1	1
	Ballast Efficiency Factor	0.90	0.90	0.90	0.90
	Max Input Current	9.50 A	5.50 A	4.75 A	4.10A
	Starting Current	6.80 A	6.80 A	6.80 A	6.80 A
	Open Circuit Voltage	440V	440V	440V	440V
	Drop Out Voltage	870V	870V	870V	870V
	Power Factor (>=)%	90	90	90	90
	Min. Starting Temp (°F/°C)	-20 / -30	-20 / -30	-20 / -30	-20 / -30
	Fuse Rating	20	10	9	8
	UL Bench Top Rise	A or D	A or D	A or D	A or D

Safety and performance cUL Listed UL Listed

See page E-1 for warranty information.

78540 – GES1000TRIAC5-5

High Pressure Sodium

1 – 1000W HPS S52 Tri Tap (120/277/347V)

General characteristics

Ballast Type	Magnetic – Core and Coil
ANSI Lamp Codes	S52
Voltage	120/277/347
Line Voltage Regulation (+/-)	10%
Circuit Type	CWA
Insulation Class	Class N, 200C
Type of Capacitor	Oil filled
Capacitance	26 Mfd GECAP-26/525V-O
Voltage (MIN)	540
Capacitor Temperature Rating	105°C (221°F)
GE Igniter	HPS1000-4B
Sound Rating	
Additional Info	

Electrical characteristics

Supply Current Frequency	50 Hz/60 Hz

Order information

Type	No. Items Per Sales Unit	No. Items Per Standard Package
Distributor Kit	1	2

Specifications by lamp and line voltage

Lamp	Specifications by line voltage			
S52		**120**	**277**	**347**
1000W	System Wattage (W)	1100	1100	1100
HPS	Nominal Current	9.50 A	4.10 A	3.30 A
	Ballast Factor	1	1	1
	Ballast Efficiency Factor	0.9	0.9	0.9
	Max Input Current	10.4 A	4.5 A	3.6 A
	Starting Current	7.0 A	7.0 A	7.0 A
	Open Circuit Voltage	425V	425V	425V
	Drop Out Voltage	84V	194V	243V
	Power Factor (>=)%	90	90	90
	Min. Starting Temp (°F/°C)	-40 / -40	-40 / -40	-40 / -40
	Fuse Rating	30	12	10
	UL Bench Top Rise	A	A	A

Safety and performance

cUL Listed UL Listed

- Magnetic ballast construction ideal for a wide variety of lighting applications
- Precision-wound coils, ensuring even heat dissipation and the highest electrical integrity
- Distributor replacement kit contains the appropriate core and coil with color coded leads, a properly rated capacitor and ignitor (if required) and all other components required for ballast replacement
- Tri Tap ballast (120/277/347)

Dimensions

Wiring diagram HID W-(L) – see example on page 18-69	
Case dimensions – Ref Drawing PC3 – see page 18-71	
Length (L)	5.25 in (133 mm)
Width (W)	1.25 in (32 mm)
Mounting dimensions	
Mount Length (M)	
Mount Width (X or F)	
Mount Slots (MS)	
A	3.74 in (95 mm)
B	5.71 in (145 mm)
Weight	27.42 lbs
Exit Type	Side
Nominal Length	5.37 in (137 mm)
Frame Size (H x L)	4.25 in (108 mm) x 6.0 in (152 mm)

See page E-1 for warranty information.

High Intensity Discharge Lamp and Ballast Kits
HID Electronic and Electromagnetic Ballasts

71701 – GEM175ML5AC3-55

High Intensity Discharge Lamp and Ballast Kits

1 – 175W MH M57 5-Tap (120/208/240/277/480V) Lamp & Ballast Kit (-55)

- Magnetic ballast construction ideal for a wide variety of lighting applications
- Precision-wound coils, ensuring even heat dissipation and the highest electrical integrity
- Distributor replacement kit contains the appropriate core and coil with color coded leads, a properly rated capacitor and ignitor (if required) and all other components required for ballast replacement
- 5-tap ballast (120, 208, 240, 277, or 480 volt) featuring a 480-volt tap

General characteristics

Ballast Type	Magnetic – Core and Coil
ANSI Lamp Codes	M57, H38, M109
Voltage	120/208/240/277/480
Line Voltage Regulation (+/-)	10%
Circuit Type	CWA
Insulation Class	180C
Type of Capacitor	Oil filled
Capacitance	10 Mfd
Voltage (MIN)	400
Capacitor Temperature Rating	100°C (212°F)
GE Igniter	
Sound Rating	
Additional Info	

Electrical characteristics

Supply Current Frequency	60 Hz

Order information

Type	No. Items Per Sales Unit	No. Items Per Standard Package
Distributor Kit	1	6

Dimensions

Wiring diagram HID W-(K) – see example on page 18-69	
Case dimensions – Ref Drawing PC2 – see page 18-71	
Length (L)	5.3 in (133 mm)
Width (W)	1.3 in (33 mm)
Mounting dimensions	
Mount Length (M)	4.6 in (117 mm)
Mount Width (X or F)	
Mount Slots (MS)	0.3 in (8 mm)
A	3.0
B	4.0
Weight	8.00 lbs
Exit Type	Side
Nominal Length	3.2 in (83 mm)
Frame Size (H x L)	2.813 in x 3.939 in
Lead Lengths	
Orange and Red	
Violet and Black	
Black/Yellow	
Violet/White	
Yellow	

Specifications by lamp and line voltage

Lamp	Specifications by line voltage	120	208	240	277	480
M57, M109	System Wattage (W)	202	202	202	202	202
	Nominal Current	1.70 A	1.00 A	0.90 A	0.80 A	0.40 A
	Ballast Factor	1	1	1	1	1
	Ballast Efficiency Factor	0.87	0.87	0.87	0.87	0.87
	Max Input Current	1.70 A	1.00 A	0.90 A	0.80 A	0.40 A
	Starting Current	0.60 A	0.37 A	0.32 A	0.28 A	0.21 A
	Open Circuit Voltage	307V	307V	307V	307V	307V
	Drop Out Voltage	96V	166V	192V	222V	384V
	Power Factor (>=)%	90	90	90	90	90
	Min. Starting Temp (°F/°C)	-22 / -30	-22 / -30	-22 / -30	-22 / -30	-22 / -30
	Fuse Rating	5	3	3	2	1.5
	UL Bench Top Rise	D	C	C	C	C

Safety and performance cUL Listed UL Listed

71702 – GEM250ML5AC3-55

High Intensity Discharge Lamp and Ballast Kits

1 – 250W MH M58 5-Tap (120/208/240/277/480V) Lamp & Ballast Kit (-55)

- Magnetic ballast construction ideal for a wide variety of lighting applications
- Precision-wound coils, ensuring even heat dissipation and the highest electrical integrity
- Distributor replacement kit contains the appropriate core and coil with color coded leads, a properly rated capacitor and ignitor (if required) and all other components required for ballast replacement
- 5-tap ballast (120, 208, 240, 277, or 480 volt) featuring a 480-volt tap

General characteristics

Ballast Type	Magnetic – Core and Coil
ANSI Lamp Codes	M58, H37
Voltage	120/208/240/277/480
Line Voltage Regulation (+/-)	10%
Circuit Type	CWA
Insulation Class	180C
Type of Capacitor	Oil filled
Capacitance	15 Mfd
Voltage (MIN)	400
Capacitor Temperature Rating	100°C (212°F)
GE Igniter	
Sound Rating	
Additional Info	

Electrical characteristics

Supply Current Frequency	60 Hz

Order information

Type	No. Items Per Sales Unit	No. Items Per Standard Package
Distributor Kit	1	6

Dimensions

Wiring diagram HID W-(H) – see example on page 18-68	
Case dimensions – Ref Drawing PC1 – see page 18-71	
Length (L)	5.3 in (133 mm)
Width (W)	1.3 in (33 mm)
Mounting dimensions	
Mount Length (M)	4.6 in (117 mm)
Mount Width (X or F)	
Mount Slots (MS)	0.3 in (8 mm)
A	3.0
B	4.3
Weight	9.00 lbs
Exit Type	Side
Nominal Length	3.2 in (83 mm)
Frame Size (H x L)	2.813 in x 3.939 in
Lead Lengths	
Orange and Red	
Violet and Black	
Black/Yellow	
Violet/White	
Yellow	

Specifications by lamp and line voltage

Lamp	Specifications by line voltage	120	208	240	277	480
M58	System Wattage (W)	280	280	280	280	280
250W Quartz Metal Halide	Nominal Current	2.50 A	1.40 A	1.25 A	1.10 A	0.65 A
	Ballast Factor	1	1	1	1	1
175W Quartz Metal Halide	Ballast Efficiency Factor	0.89	0.89	0.89	0.89	0.89
	Max Input Current	2.60 A	1.60 A	1.30 A	1.20 A	0.70 A
250W Mercury	Starting Current	1.50 A	1.00 A	0.80 A	0.70 A	0.50 A
	Open Circuit Voltage	290V	290V	290V	290V	290V
	Drop Out Voltage	96V	166V	192V	222V	384V
	Power Factor (>=)%	90	90	90	90	90
	Min. Starting Temp (°F/°C)	-22 / -30	-22 / -30	-22 / -30	-22 / -30	-22 / -30
	Fuse Rating	8	5	4	3	2
	UL Bench Top Rise	B	B	B	C	C

Safety and performance cUL Listed UL Listed

See page E-1 for warranty information.

71703 – GEM400ML5AC4-55

High Intensity Discharge Lamp and Ballast Kits

1 – 400W MH M59 5-Tap (120/208/240/277/480V) Lamp & Ballast Kit (-55)

- Magnetic ballast construction ideal for a wide variety of lighting applications
- Precision-wound coils, ensuring even heat dissipation and the highest electrical integrity
- Distributor replacement kit contains the appropriate core and coil with color coded leads, a properly rated capacitor and ignitor (if required) and all other components required for ballast replacement
- 5-tap ballast (120, 208, 240, 277, or 480 volt) featuring a 480-volt tap

General characteristics

Ballast Type	Magnetic – Core and Coil
ANSI Lamp Codes	M59, H33
Voltage	120/208/240/277/480
Line Voltage Regulation (+/-)	10%
Circuit Type	CWA
Insulation Class	180C
Type of Capacitor	Oil filled
Capacitance	24 Mfd
Voltage (MIN)	400
Capacitor Temperature Rating	100°C (212°F)
GE Igniter	
Sound Rating	
Additional Info	

Electrical characteristics

Supply Current Frequency	60 Hz

Order information

Type	No. Items Per Sales Unit	No. Items Per Standard Package
Distributor Kit	1	3

Dimensions

Wiring diagram HID W-(K) – see example on page 18-69	
Case dimensions – Ref Drawing PC1 – see page 18-71	
Length (L)	5.3 in (133 mm)
Width (W)	1.3 in (33 mm)
Mounting dimensions	
Mount Length (M)	4.6 in (117 mm)
Mount Width (X or F)	
Mount Slots (MS)	0.3 in (8 mm)
A	2.0
B	4.0
Weight	12.50 lbs
Exit Type	Side
Nominal Length	3.7 in (95 mm)
Frame Size (H x L)	4.25 in x 4.75 in
Lead Lengths	
Orange and Red	
Violet and Black	
Black/Yellow	
Violet/White	
Yellow	

Specifications by lamp and line voltage

Lamp	Specifications by line voltage					
M59		**120**	**208**	**240**	**277**	**480**
360W Quartz Metal Halide	System Wattage (W)	436	436	436	436	436
	Nominal Current	3.70 A	2.10 A	1.90 A	1.60 A	0.90 A
400W Quartz Metal Halide	Ballast Factor					
	Ballast Efficiency Factor	0.92	0.92	0.92	0.92	0.92
	Max Input Current	3.70 A	2.10 A	1.90 A	1.60 A	0.90 A
400W Mercury	Starting Current	2.19 A	1.31 A	1.11 A	1.00 A	0.60 A
	Open Circuit Voltage	300V	300V	300V	300V	300V
	Drop Out Voltage	96V	166V	192V	222V	384V
	Power Factor (>=)%	90	90	90	90	90
	Min. Starting Temp (°F/°C)	-22 / -30	-22 / -30	-22 / -30	-22 / -30	-22 / -30
	Fuse Rating	10	8	5	5	5
	UL Bench Top Rise	E	E	E	E	E

Safety and performance cUL Listed UL Listed

71704 – GEM1000ML5AC4-55

High Intensity Discharge Lamp and Ballast Kits

1 – 1000W MH M47 5-Tap (120/208/240/277/480V) Lamp & Ballast Kit (-55)

- Magnetic ballast construction ideal for a wide variety of lighting applications
- Precision-wound coils, ensuring even heat dissipation and the highest electrical integrity
- Distributor replacement kit contains the appropriate core and coil with color coded leads, a properly rated capacitor and ignitor (if required) and all other components required for ballast replacement
- 5-tap ballast (120, 208, 240, 277, or 480 volt) featuring a 480-volt tap

General characteristics

Ballast Type	Magnetic – Core and Coil
ANSI Lamp Codes	M47, H36
Voltage	120/208/240/277/480
Line Voltage Regulation (+/-)	10%
Circuit Type	CWA
Insulation Class	180C
Type of Capacitor	Oil filled
Capacitance	24 Mfd
Voltage (MIN)	400
Capacitor Temperature Rating	100°C (212°F)
GE Igniter	
Sound Rating	
Additional Info	

Electrical characteristics

Supply Current Frequency	60 Hz

Order information

Type	No. Items Per Sales Unit	No. Items Per Standard Package
Distributor Kit	1	2

Dimensions

Wiring diagram HID W-(K) – see example on page 18-69	
Case dimensions – Ref Drawing PC1 – see page 18-71	
Length (L)	7.8 in (197 mm)
Width (W)	2.8 in (70 mm)
Height (H)	
Mounting dimensions	
Mount Length (M)	6.1 in (155 mm)
Mount Width (X or F)	
Mount Slots (MS)	0.3 in (8 mm)
A	3.0
B	5.0
Weight	21.00 lbs
Exit Type	Side
Nominal Length	3.7 in (95 mm)
Frame Size (H x L)	4.25 in x 6.00 in
Lead Lengths	
Orange and Red	
Violet and Black	
Black/Yellow	
Violet/White	
Yellow	

Specifications by lamp and line voltage

Lamp	Specifications by line voltage					
M47		**120**	**208**	**240**	**277**	**480**
1000W Quartz Metal Halide	System Wattage (W)	1103	1103	1103	1103	1103
	Nominal Current	9.30 A	5.40 A	4.70 A	4.10 A	2.40 A
1000W Mercury	Ballast Factor	1	1	1	1	1
	Ballast Efficiency Factor	0.91	0.91	0.91	0.91	0.91
	Max Input Current	9.30 A	5.40 A	4.70 A	4.10 A	2.40 A
	Starting Current	6.34 A	3.71 A	3.20 A	2.79 A	1.65 A
	Open Circuit Voltage	445V	445V	445V	445V	445V
	Drop Out Voltage	96V	166V	192V	222V	384V
	Power Factor (>=)%	90	90	90	90	90
	Min. Starting Temp (°F/°C)	-22 / -30	-22 / -30	-22 / -30	-22 / -30	-22 / -30
	Fuse Rating	20	15	10	10	10
	UL Bench Top Rise	E	C	C	C	D

Safety and performance cUL Listed UL Listed

High Intensity Discharge Lamp and Ballast Kits
HID Electronic and Electromagnetic Ballasts

71705 – GES100MLTLC3D-55

High Intensity Discharge Lamp and Ballast Kits

1 – 100W HPS S54 Quad (120/208/240/277V) Lamp & Ballast Kit (-55)

- Magnetic ballast construction ideal for a wide variety of lighting applications
- Precision-wound coils, ensuring even heat dissipation and the highest electrical integrity
- Distributor replacement kit contains the appropriate core and coil with color coded leads, a properly rated capacitor and ignitor (if required) and all other components required for ballast replacement
- 5-tap ballast (120, 208, 240, 277, or 480 volt) featuring a 480-volt tap

General characteristics

Ballast Type	Magnetic – Core and Coil
ANSI Lamp Codes	S54
Voltage	120/208/240/277
Line Voltage Regulation (+/-)	5%
Circuit Type	HX-HPF
Insulation Class	180C
Type of Capacitor	Dry Film
Capacitance	10 Mfd
Voltage (MIN)	280
Capacitor Temperature Rating	100°C (212°F)
GE Igniter	HPS100-3A 86884
Sound Rating	
Additional Info	

Electrical characteristics

Supply Current Frequency	60 Hz

Order information

Type	No. Items Per Sales Unit	No. Items Per Standard Package
Distributor Kit	1	6

Dimensions

Wiring diagram HID W-(K)– see example on page 18-69	
Case dimensions – Ref Drawing PC3 – see page 18-71	
Length (L)	5.3 in (133 mm)
Width (W)	1.3 in (33 mm)
Mounting dimensions	
Mount Length (M)	4.6 in (117 mm)
Mount Width (X or F)	
Mount Slots (MS)	0.3 in (8 mm)
A	2.0
B	4.0
Weight	6.20 lbs
Exit Type	Side
Nominal Length	2.7 in (69 mm)
Frame Size (H x L)	2.813 in x 3.939 in

Specifications by lamp and line voltage

Lamp	Specifications by line voltage				
S54		**120**	**208**	**240**	**277**
100W High Pressure Sodium	System Wattage (W)	123	123	123	123
	Nominal Current	2.20 A	1.30 A	1.10 A	0.90 A
150W High Pressure Sodium	Ballast Factor	1	1	1	1
	Ballast Efficiency Factor	1.22	1.22	1.22	1.22
	Max Input Current	2.18 A	1.27 A	1.13 A	0.94 A
	Starting Current	0.74 A	0.43 A	0.36 A	0.31 A
	Open Circuit Voltage	119V	119V	119V	119V
	Drop Out Voltage	96V	166V	192V	222V
	Power Factor (>=)%	90	90	90	90
	Min. Starting Temp (°F/°C)	-22 / -30	-22 / -30	-22 / -30	-22 / -30
	Fuse Rating	8	5	5	3
	UL Bench Top Rise	B	B	B	B

Safety and performance

cUL Listed UL Listed

71706 – GES250ML5AC4-55

High Intensity Discharge Lamp and Ballast Kits

1 – 250W HPS S50 5-Tap (120/208/240/277/480V) Lamp & Ballast Kit (-55)

- Magnetic ballast construction ideal for a wide variety of lighting applications
- Precision-wound coils, ensuring even heat dissipation and the highest electrical integrity
- Distributor replacement kit contains the appropriate core and coil with color coded leads, a properly rated capacitor and ignitor (if required) and all other components required for ballast replacement
- 5-tap ballast (120, 208, 240, 277, or 480 volt) featuring a 480-volt tap

General characteristics

Ballast Type	Magnetic – Core and Coil
ANSI Lamp Codes	S50
Voltage	120/208/240/277/480
Line Voltage Regulation (+/-)	10%
Circuit Type	CWA
Insulation Class	180C
Type of Capacitor	Oil Filled
Capacitance	35 Mfd
Voltage (MIN)	240
Capacitor Temperature Rating	100°C (212°F)
GE Igniter	HPS400-3A 86641
Sound Rating	
Additional Info	

Electrical characteristics

Supply Current Frequency	60 Hz

Order information

Type	No. Items Per Sales Unit	No. Items Per Standard Package
Distributor Kit	1	3

Dimensions

Wiring diagram HID W-(B) – see example on page 18-68	
Case dimensions – Ref Drawing PC2 – see page 18-71	
Length (L)	5.3 in (133 mm)
Width (W)	1.3 in (33 mm)
Mounting dimensions	
Mount Length (M)	4.6 in (117 mm)
Mount Width (X or F)	
Mount Slots (MS)	0.3 in (8 mm)
A	2.0
B	4.0
Weight	12.00 lbs
Exit Type	Side
Nominal Length	3.7 in (95 mm)
Frame Size (H x L)	4.25 in x 4.75 in
Lead Lengths	
Orange and Red	
Violet and Black	
Black/Yellow	
Violet/White	
Yellow	

Specifications by lamp and line voltage

Lamp	Specifications by line voltage					
S50		**120**	**208**	**240**	**277**	**480**
250W High Pressure Sodium	System Wattage (W)	292	292	292	292	292
	Nominal Current	2.50 A	1.50 A	1.30 A	1.10 A	0.60 A
	Ballast Factor	1	1	1	1	1
	Ballast Efficiency Factor	0.86	0.86	0.86	0.86	0.86
	Max Input Current	2.50 A	1.50 A	1.30 A	1.10 A	0.60 A
	Starting Current	1.59 A	0.93 A	0.81 A	0.70 A	0.40 A
	Open Circuit Voltage	186V	186V	186V	186V	186V
	Drop Out Voltage	96V	166V	192V	222V	384V
	Power Factor (>=)%	90	90	90	90	90
	Min. Starting Temp (°F/°C)	-22 / -30	-22 / -30	-22 / -30	-22 / -30	-22 / -30
	Fuse Rating	8	5	4	4	4
	UL Bench Top Rise	C	C	B	B	B

Safety and performance

cUL Listed UL Listed

See page E-1 for warranty information.

71707 – GES400ML5AC4-55

High Intensity Discharge Lamp and Ballast Kits

1 – 400W HPS S51 5-Tap (120/208/240/277/480V) Lamp & Ballast Kit (-55)

- Magnetic ballast construction ideal for a wide variety of lighting applications
- Precision-wound coils, ensuring even heat dissipation and the highest electrical integrity
- Distributor replacement kit contains the appropriate core and coil with color coded leads, a properly rated capacitor and ignitor (if required) and all other components required for ballast replacement
- 5-tap ballast (120, 208, 240, 277, or 480 volt) featuring a 480-volt tap

General characteristics

Ballast Type	Magnetic – Core and Coil
ANSI Lamp Codes	S51
Voltage	120/208/240/277/480
Line Voltage Regulation (+/-)	10%
Circuit Type	CWA
Insulation Class	180C
Type of Capacitor	Oil Filled
Capacitance	55 Mfd
Voltage (MIN)	240
Capacitor Temperature Rating	100°C (212°F)
GE Igniter	HPS1000-4B
Sound Rating	
Additional Info	

Electrical characteristics

Supply Current Frequency	60 Hz

Order information

Type	No. Items Per Sales Unit	No. Items Per Standard Package
Distributor Kit	1	3

Dimensions

Wiring diagram HID W-(B) – see example on page 18-68	
Case dimensions – Ref Drawing PC2 – see page 18-71	
Length (L)	5.3 in (133 mm)
Width (W)	1.3 in (33 mm)
Mounting dimensions	
Mount Length (M)	4.6 in (117 mm)
Mount Width (X or F)	
Mount Slots (MS)	0.3 in (8 mm)
A	2.0
B	4.0
Weight	15.00 lbs
Exit Type	Side
Nominal Length	4.2 in (108 mm)
Frame Size (H x L)	4.25 in x 4.75 in
Lead Lengths	
Orange and Red	
Violet and Black	
Black/Yellow	
Violet/White	
Yellow	

Specifications by lamp and line voltage

Lamp	Specifications by line voltage					
S51		**120**	**208**	**240**	**277**	**480**
400W High Pressure Sodium	System Wattage (W)	472	472	472	472	472
	Nominal Current	4.00 A	2.20 A	2.00 A	1.70 A	1.00 A
	Ballast Factor	1	1	1	1	1
	Ballast Efficiency Factor	0.85	0.85	0.85	0.85	0.85
	Max Input Current	4.00 A	2.20 A	2.00 A	1.70 A	1.00 A
	Starting Current	2.87 A	1.66 A	1.44 A	1.25 A	0.72 A
	Open Circuit Voltage	191V	191V	191V	191V	191V
	Drop Out Voltage	96V	166V	192V	222V	384V
	Power Factor (>=)%	90	90	90	90	90
	Min. Starting Temp (°F/°C)	-22 / -30	-22 / -30	-22 / -30	-22 / -30	-22 / -30
	Fuse Rating	15	8	8	5	5
	UL Bench Top Rise	C	C	C	C	C

Safety and performance

cUL Listed UL Listed

HID Metal Halide F-Can
HID Electronic and Electromagnetic Ballasts

86576 – 11210277CTC000C

HID Metal Halide F-Can

1 – 70W M85 120/277 Enclosed and Potted F-Can

- For applications requiring quieter or cooler operation than provided by standard coil and coil ballasts
- Excellent sound-deadening and heat transfer qualities

General characteristics

Ballast Type	Magnetic – F-Can
ANSI Lamp Codes	M85
Voltage	
Line Voltage Regulation (+/-)	5%
Circuit Type	HX-HPF
Insulation Class	90C
Type of Capacitor	
Capacitance	
Voltage (MIN)	
Capacitor Temperature Rating	100°C (212°F)
Sound Rating	
Additional Info	Thermally Protected

Electrical characteristics

Supply Current Frequency	60 Hz

Order information

Type	No. Items Per Sales Unit	No. Items Per Standard Package
Standard Pack	1	4

Dimensions

Wiring diagram HID H34 – see example on page 18-67	
Case dimensions – Ref Drawing FCAN1 – see page 18-70	
Length (L)	11.75 in (299 mm)
Width (W)	3.2 in (81 mm)
Height (H)	2.6 in (67 mm)
Mounting dimensions	
Mount Length (M)	11.1 in (283 mm)
Mount Width (X or F)	2.0 in (51 mm)
Mount Slots (MS)	0.2 in (6 mm)
Weight	11.00 lbs
Exit Type	Side
Remote Mounting Distance to Lamp	20 ft
Remote Mounting Wire Gauge	18 AWG
Lead Lengths	
Black and White	
Red	
Black/Yellow	

Specifications by lamp and line voltage

Lamp	Specifications by line voltage		
M85		**120**	**277**
70W Ceramic Metal Halide	System Wattage (W)	90	90
	Nominal Current	0.78 A	0.35 A
70W Quartz Metal Halide	Ballast Factor	1	1
	Ballast Efficiency Factor	0.78	0.78
	Max Input Current	2.00 A	0.90 A
	Starting Current	0.60 A	0.27 A
	Open Circuit Voltage	250V	250V
	Drop Out Voltage	66V	222V
	Power Factor (>=)%	90	90
	Min. Starting Temp (°F/°C)	-22 / -30	-22 / -30
	Fuse Rating	6	3
	UL Bench Top Rise		

Safety and performance

cUL Listed UL Listed

63047 – GEM70MVR-F

HID Metal Halide F-Can

1 – 70W M98 120/277 Enclosed and Potted F-Can

- For applications requiring quieter or cooler operation than provided by standard coil and coil ballasts
- Excellent sound-deadening and heat transfer qualities

General characteristics

Ballast Type	Magnetic – F-Can
ANSI Lamp Codes	M98
Voltage	120/277
Line Voltage Regulation (+/-)	5%
Circuit Type	HX-HPF
Insulation Class	90C
Type of Capacitor	
Capacitance	
Voltage (MIN)	
Capacitor Temperature Rating	
Sound Rating	B (25-30 decibels)
Additional Info	Thermally Protected

Electrical characteristics

Supply Current Frequency	60 Hz

Order information

Type	No. Items Per Sales Unit	No. Items Per Standard Package
Standard Pack	1	4

Dimensions

Wiring diagram HID H34 – see example on page 18-67	
Case dimensions – Ref Drawing FCAN1 – see page 18-70	
Length (L)	11.75 in (299 mm)
Width (W)	3.2 in (81 mm)
Height (H)	2.6 in (67 mm)
Mounting dimensions	
Mount Length (M)	11.1 in (283 mm)
Mount Width (X or F)	2.0 in (51 mm)
Mount Slots (MS)	0.2 in (6 mm)
Weight	11.00 lbs
Exit Type	Side
Remote Mounting Distance to Lamp	10 ft
Remote Mounting Wire Gauge	18 AWG
Lead Lengths	
Black and White	12 in (305 mm)
Red	12 in (305 mm)
Black/Yellow	12 in (305 mm)

Specifications by lamp and line voltage

Lamp	Specifications by line voltage		
M98		**120**	**277**
70W Ceramic Metal Halide	System Wattage (W)	82	79
	Nominal Current	0.70 A	0.30 A
70W Quartz Metal Halide	Ballast Factor	1	1
	Ballast Efficiency Factor	0.85	0.88
	Max Input Current	2.00 A	0.90 A
	Starting Current	0.60 A	0.27 A
	Open Circuit Voltage	250V	250V
	Drop Out Voltage	114V	263V
	Power Factor (>=)%	90	90
	Min. Starting Temp (°F/°C)	-22 / -30	-22 / -30
	Fuse Rating	6	3
	UL Bench Top Rise		

Safety and performance

cUL Listed UL Listed

See page E-1 for warranty information.

63048 – GEMH100MVR-F

HID Metal Halide F-Can

1 – 100W M90 120/277 Enclosed and Potted F-Can

- For applications requiring quieter or cooler operation than provided by standard coil and coil ballasts
- Excellent sound-deadening and heat transfer qualities

General characteristics

Ballast Type	Magnetic – F-Can
ANSI Lamp Codes	M90
Voltage	120/277
Line Voltage Regulation (+/-)	5%
Circuit Type	HX-HPF
Insulation Class	90C
Type of Capacitor	
Capacitance	
Voltage (MIN)	
Capacitor Temperature Rating	100°C (212°F)
Sound Rating	B (25-30 decibels)
Additional Info	Thermally Protected

Electrical characteristics

Supply Current Frequency	60 Hz

Order information

Type	No. Items Per Sales Unit	No. Items Per Standard Package
Standard Pack	1	4

Dimensions

Wiring diagram HID H34 – see example on page 18-67	
Case dimensions – Ref Drawing FCAN1 – see page 18-70	
Length (L)	11.75 in (299 mm)
Width (W)	3.2 in (81 mm)
Height (H)	2.6 in (67 mm)
Mounting dimensions	
Mount Length (M)	11.1 in (283 mm)
Mount Width (X or F)	2.0 in (51 mm)
Mount Slots (MS)	0.2 in (6 mm)
Weight	11.00 lbs
Exit Type	Side
Remote Mounting Distance to Lamp	10 ft
Remote Mounting Wire Gauge	18 AWG
Lead Lengths	
Black and White	12 in (305 mm)
Red	12 in (305 mm)
Black/Yellow	12 in (305 mm)

Specifications by lamp and line voltage

Lamp	Specifications by line voltage		
M90		**120**	**277**
100W Ceramic Metal Halide	System Wattage (W)	122	125
	Nominal Current	1.07 A	0.47 A
100W Quartz Metal Halide	Ballast Factor	1	1
	Ballast Efficiency Factor	0.80	0.80
	Max Input Current	1.07 A	0.47 A
	Starting Current	1.10 A	0.50 A
	Open Circuit Voltage	250V	250V
	Drop Out Voltage	96V	222V
	Power Factor (>=)%	90	90
	Min. Starting Temp (°F/°C)	-22 / -30	-22 / -30
	Fuse Rating	8	4
	UL Bench Top Rise		

Safety and performance cUL Listed UL Listed

63049 – GEMH150MVR-F

HID Metal Halide F-Can

1 – 150W MH 120/277 Enclosed and Potted F-Can

- For applications requiring quieter or cooler operation than provided by standard coil and coil ballasts
- Excellent sound-deadening and heat transfer qualities

General characteristics

Ballast Type	Magnetic – F-Can
ANSI Lamp Codes	M102
Voltage	120/277
Line Voltage Regulation (+/-)	5%
Circuit Type	HX-HPF
Insulation Class	90C
Type of Capacitor	
Capacitance	
Voltage (MIN)	
Capacitor Temperature Rating	100°C (212°F)
Sound Rating	B (25-30 decibels)
Additional Info	Thermally Protected

Electrical characteristics

Supply Current Frequency	60 Hz

Order information

Type	No. Items Per Sales Unit	No. Items Per Standard Package
Standard Pack	1	2

Dimensions

Wiring diagram HID H34 – see example on page 18-67	
Case dimensions – Ref Drawing FCAN2 – see page 18-70	
Length (L)	11.8 in (300 mm)
Width (W)	3.2 in (81 mm)
Height (H)	2.8 in (70 mm)
Mounting dimensions	
Mount Length (M)	11.4 in (290 mm)
Mount Width (X or F)	2.0 in (51 mm)
Mount Slots (MS)	0.2 in (6 mm)
Weight	13.00 lbs
Exit Type	Side
Remote Mounting Distance to Lamp	
Remote Mounting Wire Gauge	
Lead Lengths	
Black and White	12 in (305 mm)
Red	12 in (305 mm)
Black/Yellow	12 in (305 mm)

Specifications by lamp and line voltage

Lamp	Specifications by line voltage		
M102		**120**	**277**
175W Ceramic Metal Halide	System Wattage (W)	184	186
	Nominal Current	1.75 a	0.75 A
150W Quartz Metal Halide	Ballast Factor	1	1
	Ballast Efficiency Factor	0.85	0.85
	Max Input Current		
175W Mercury	Starting Current	1.5	.7
	Open Circuit Voltage	260V	260V
	Drop Out Voltage	75V	160V
	Power Factor (>=)%	90	90
	Min. Starting Temp (°F/°C)	-22 / -30	-22 / -30
	Fuse Rating	5	3
	UL Bench Top Rise		

Safety and performance UL Listed CSA

See page E-1 for warranty information.

HID Metal Halide F-Can
HID Electronic and Electromagnetic Ballasts

63050 – GEMH175MVA-F

HID Metal Halide F-Can

1 – 175W M57 120/277 Enclosed and Potted F-Can

- For applications requiring quieter or cooler operation than provided by standard coil and coil ballasts
- Excellent sound-deadening and heat transfer qualities

General characteristics

Ballast Type	Magnetic – F-Can
ANSI Lamp Codes	M57, H39
Voltage	120/277
Line Voltage Regulation (+/-)	5%
Circuit Type	HX-HPF
Insulation Class	90C
Type of Capacitor	
Capacitance	
Voltage (MIN)	
Capacitor Temperature Rating	105°C (221°F)
Sound Rating	B (25-30 decibels)
Additional Info	Thermally Protected

Electrical characteristics

Supply Current Frequency	60 Hz

Order information

Type	No. Items Per Sales Unit	No. Items Per Standard Package
Standard Pack	1	2

Specifications by lamp and line voltage

Lamp	Specifications by line voltage		
M57, H39		**120**	**277**
175W Ceramic Metal Halide	System Wattage (W)	202	205
	Nominal Current	1.75 a	0.75 A
150W Quartz Metal Halide	Ballast Factor	1	1
	Ballast Efficiency Factor	0.85	0.85
175W Mercury	Max Input Current		
	Starting Current		
	Open Circuit Voltage	300V	300V
	Drop Out Voltage	114V	263V
	Power Factor (>=)%	90	90
	Min. Starting Temp (°F/°C)	-22 / -30	-22 / -30
	Fuse Rating	5	3
	UL Bench Top Rise		

Dimensions

Wiring diagram HID H34 – see example on page 18-67	
Case dimensions – Ref Drawing FCAN2 – see page 18-70	
Length (L)	11.8 in (300 mm)
Width (W)	3.2 in (81 mm)
Height (H)	2.6 in (67 mm)
Mounting dimensions	
Mount Length (M)	11.4 in (290 mm)
Mount Width (X or F)	2.0 in (51 mm)
Mount Slots (MS)	0.2 in (6 mm)
Weight	13.00 lbs
Exit Type	Side
Remote Mounting Distance to Lamp	
Remote Mounting Wire Gauge	
Lead Lengths	
Black and White	12 in (305 mm)
Red	12 in (305 mm)
Black/Yellow	12 in (305 mm)

Safety and performance

cUL Listed UL Listed

63051 – GEMH250MVA-F

HID Metal Halide F-Can

1 – 250W M58 120/277 Enclosed and Potted F-Can

- For applications requiring quieter or cooler operation than provided by standard coil and coil ballasts
- Excellent sound-deadening and heat transfer qualities

General characteristics

Ballast Type	Magnetic – F-Can
ANSI Lamp Codes	M58, H37
Voltage	120/277
Line Voltage Regulation (+/-)	5%
Circuit Type	HX-HPF
Insulation Class	90C
Type of Capacitor	
Capacitance	
Voltage (MIN)	
Capacitor Temperature Rating	100°C (212°F)
Sound Rating	C (31-36 decibels)
Additional Info	Thermally Protected

Electrical characteristics

Supply Current Frequency	60 Hz

Order information

Type	No. Items Per Sales Unit	No. Items Per Standard Package
Standard Pack	1	2

Specifications by lamp and line voltage

Lamp	Specifications by line voltage		
M58, H37		**120**	**277**
250W Quartz Metal Halide	System Wattage (W)	319	312
	Nominal Current	2.50 A	1.10 A
175W Quartz Metal Halide	Ballast Factor	1	1
	Ballast Efficiency Factor	0.85	0.85
250W Mercury	Max Input Current		
	Starting Current		
	Open Circuit Voltage	280V	280V
	Drop Out Voltage	96V	222V
	Power Factor (>=)%	90	90
	Min. Starting Temp (°F/°C)	-22 / -30	-22 / -30
	Fuse Rating	8	4
	UL Bench Top Rise		

Dimensions

Wiring diagram HID H34 – see example on page 18-67	
Case dimensions – Ref Drawing FCAN3 – see page 18-70	
Length (L)	16.6 in (422 mm)
Width (W)	3.2 in (81 mm)
Height (H)	2.7 in (70 mm)
Mounting dimensions	
Mount Length (M)	16.1 in (410 mm)
Mount Width (X or F)	2.0 in (51 mm)
Mount Slots (MS)	0.2 in (6 mm)
Weight	17.50 lbs
Exit Type	Side
Remote Mounting Distance to Lamp	
Remote Mounting Wire Gauge	
Lead Lengths	
Black and White	12 in (305 mm)
Red	12 in (305 mm)
Black/Yellow	12 in (305 mm)

Safety and performance

cUL Listed UL Listed

See page E-1 for warranty information.

63052 – GEMH400MVA-F

HID Metal Halide F-Can

1 – 400W M59 120/277 Enclosed and Potted F-Can

- For applications requiring quieter or cooler operation than provided by standard coil and coil ballasts
- Excellent sound-deadening and heat transfer qualities

General characteristics

Ballast Type	Magnetic – F-Can
ANSI Lamp Codes	M59, H33
Voltage	120/277
Line Voltage Regulation (+/-)	5%
Circuit Type	HX-HPF
Insulation Class	90C
Type of Capacitor	
Capacitance	
Voltage (MIN)	
Capacitor Temperature Rating	100°C (212°F)
Sound Rating	C (31-36 decibels)
Additional Info	Thermally Protected

Electrical characteristics

Supply Current Frequency	60 Hz

Order information

Type	No. Items Per Sales Unit	No. Items Per Standard Package
Standard Pack	1	2

Specifications by lamp and line voltage

Lamp	Specifications by line voltage		
M59, H39		**120**	**277**
360W Quartz Metal Halide	System Wattage (W)	445	446
	Nominal Current	3.90 A	1.70 A
400W Quartz Metal Halide	Ballast Factor	1	1
	Ballast Efficiency Factor	0.88	0.88
400W Mercury	Max Input Current	3.90 A	1.70 A
	Starting Current	2.50 A	1.00 A
	Open Circuit Voltage	300V	300V
	Drop Out Voltage	66V	222V
	Power Factor (>=)%	90	90
	Min. Starting Temp (°F/°C)	-22 / -30	-22 / -30
	Fuse Rating	10	5
	UL Bench Top Rise	C	C

Dimensions

Wiring diagram HID H34 – see example on page 18-67	
Case dimensions – Ref Drawing FCAN4 – see page 18-70	
Length (L)	21.6 in (549 mm)
Width (W)	3.2 in (81 mm)
Height (H)	2.6 in (67 mm)
Mounting dimensions	
Mount Length (M)	21.0 in (533 mm)
Mount Width (X or F)	2.0 in (51 mm)
Mount Slots (MS)	0.2 in (6 mm)
Weight	23.00 lbs
Exit Type	Side
Remote Mounting Distance to Lamp	
Remote Mounting Wire Gauge	
Lead Lengths	
Black and White	12 in (305 mm)
Red	12 in (305 mm)
Black/Yellow	12 in (305 mm)

Safety and performance

cUL Listed UL Listed

80728 – 1111-247SCTC000I

HID Metal Halide F-Can

1 – 400W M59 120/277 Enclosed and Potted F-Can
(2 ballasts required to operate one 400W lamp)

- For applications requiring quieter or cooler operation than provided by standard coil and coil ballasts
- Excellent sound-deadening and heat transfer qualities

General characteristics

Ballast Type	Magnetic – F-Can
ANSI Lamp Codes	M59, H33
Voltage	120/277
Line Voltage Regulation (+/-)	10%
Circuit Type	CWA
Insulation Class	90C
Type of Capacitor	
Capacitance	
Voltage (MIN)	
Capacitor Temperature Rating	100°C (212°F)
Sound Rating	C (31-36 decibels)
Additional Info	Thermally Protected

Electrical characteristics

Supply Current Frequency	60 Hz

Order information

Type	No. Items Per Sales Unit	No. Items Per Standard Package
Standard Pack	1	4

Specifications by lamp and line voltage

Lamp	Specifications by line voltage		
M59, H33		**120**	**277**
360W Quartz Metal Halide	System Wattage (W)	460	460
	Nominal Current	3.90 A	1.70 A
400W Quartz Metal Halide	Ballast Factor	1	1
	Ballast Efficiency Factor	0.87	0.87
400W Mercury	Max Input Current		
	Starting Current		
	Open Circuit Voltage	300V	300V
	Drop Out Voltage	96V	222V
	Power Factor (>=)%		
	Min. Starting Temp (°F/°C)	-22 / -30	-22 / -30
	Fuse Rating	10	5
	UL Bench Top Rise		

Dimensions

Wiring diagram HID H36 – see example on page 18-67	
Case dimensions – Ref Drawing FCAN2 – see page 18-70	
Length (L)	14.3 in (364 mm)
Width (W)	3.2 in (81 mm)
Height (H)	2.6 in (67 mm)
Mounting dimensions	
Mount Length (M)	13.8 in (349 mm)
Mount Width (X or F)	2.0 in (51 mm)
Mount Slots (MS)	0.2 in (6 mm)
Weight	14.00 lbs
Exit Type	Side
Remote Mounting Distance to Lamp	
Remote Mounting Wire Gauge	
Lead Lengths	
Black and White	
Red	
Black/Yellow	

Safety and performance

cUL Listed UL Listed

See page E-1 for warranty information.

HID - High Pressure Sodium F-Can
HID Electronic and Electromagnetic Ballasts

86596 – 12210237CTC000I

HID - High Pressure Sodium F-Can

1 – 70W S62 120/277 E & P F-Can built-in starter

- For applications requiring quieter or cooler operation than provided by standard coil & coil ballasts
- Excellent sound-deadening and heat transfer qualities

General characteristics

Ballast Type	Magnetic – F-Can
ANSI Lamp Codes	S62
Voltage	120/277
Line Voltage Regulation (+/-)	5%
Circuit Type	HX-HPF
Insulation Class	90C
Type of Capacitor	
Capacitance	
Voltage (MIN)	
Capacitor Temperature Rating	100°C (212°F)
Sound Rating	
Additional Info	Thermally protected

Electrical characteristics

Supply Current Frequency	60 Hz

Order information

Type	No. Items Per Sales Unit	No. Items Per Standard Package
Standard Pack	1	4

Specifications by lamp & line voltage

Lamp	Specifications by line voltage		
S62		**120**	**277**
70W High Pressure Sodium	System Wattage (W)	98	98
	Nominal Current	0.87 A	0.39 A
	Ballast Factor	1	1
	Ballast Efficiency Factor	0.71	0.71
	Max Input Current	0.87 A	0.39 A
	Starting Current	0.60 A	0.27 A
	Open Circuit Voltage	140V	140V
	Drop Out Voltage	96V	222V
	Power Factor (>=)%	90	90
	Min. Starting Temp (°F/°C)	-22 / -30	-22 / -30
	Fuse Rating	6	3
	UL Bench Top Rise		

Safety and performance

cUL Listed UL Listed

Dimensions

Wiring diagram HID H34 – see example on page 18-67	
Case dimensions – Ref Drawing FCAN1 – see page 18-70	
Length (L)	11.75 in (299 mm)
Width (W)	3.188 in (81 mm)
Height (H)	2.625 in (67 mm)
Mounting dimensions	
Bracket Length (BL)	
Mount Length (M)	11.1 in (283 mm)
Mount Width (X or F)	2.0 in (51 mm)
Mount Slots (MS)	0.2 in (6 mm)
A	
B	
Weight	11.00 lbs
Exit Type	Side
Nominal Length	
Frame Size (H x L)	
Lead lengths	
White	
Black	
Black/Yellow	
Red	

See page E-1 for warranty information.

86605 – 1233142U000I

HID - High Pressure Sodium Reactor

1 – 70W S62 120 Reactor-NPF

- Magnetic ballast construction ideal for a wide variety of lighting applications
- Precision-wound coils, ensuring even heat dissipation and the highest electrical integrity

General characteristics

Ballast Type	Magnetic – Core and Coil
ANSI Lamp Codes	S62
Voltage	120
Line Voltage Regulation (+/-)	5%
Circuit Type	R-HPF R-NPF
Insulation Class	90C
Type of Capacitor	
Capacitance	
Voltage (MIN)	
Capacitor Temperature Rating	100°C (212°F)
Sound Rating	
Additional Info	

Electrical characteristics

Supply Current Frequency	60 Hz

Order information

Type	No. Items Per Sales Unit	No. Items Per Standard Package
Standard Pack	1	6

Specifications by lamp & line voltage

Lamp	Specifications by line voltage		
S62		**120**	**120**
70W High Pressure Sodium	System Wattage (W)	83	83
	Nominal Current	0.75 A	1.60 A
	Ballast Factor	1	1
	Ballast Efficiency Factor	0.84	0.84
	Max Input Current	1.30 A	2.10 A
	Starting Current	0.90 A	2.10 A
	Open Circuit Voltage	120V	120V
	Drop Out Voltage	96V	96V
	Power Factor (>=)%	90	80
	Min. Starting Temp (°F/°C)	-22 / -30	-22 / -30
	Fuse Rating	5	8
	UL Bench Top Rise	A	A

Dimensions

Wiring diagram HID H1a, HID H1 – see example on page 18-67	
Case dimensions – Ref Drawing 1 – see page 18-70	
Length (L)	4.00 in (102 mm)
Width (W)	0.75 in (19 mm)
Height (H)	0.1 in (2.36 mm)
Mounting dimensions	
Bracket Length (BL)	4.00 in (102 mm)
Mount Length (M)	3.30 in (85 mm)
Mount Width (X or F)	
Mount Slots (MS)	0.25 in (6 mm)
A	1.3
B	2.6
Weight	2.50 lbs
Exit Type	Side
Nominal Length	
Frame Size (H x L)	
Lead lengths	
Black	
Blue	
White	

Safety and performance

cUL Listed UL Listed

86606 – 1233154U000I

HID - High Pressure Sodium Reactor

1 – 150W S55 120 Reactor-NPF

- Magnetic ballast construction ideal for a wide variety of lighting applications
- Precision-wound coils, ensuring even heat dissipation and the highest electrical integrity

General characteristics

Ballast Type	Magnetic – Core and Coil
ANSI Lamp Codes	S55
Voltage	120
Line Voltage Regulation (+/-)	5%
Circuit Type	R-NPF
Insulation Class	180C
Type of Capacitor	
Capacitance	52 Mfd
Voltage (MIN)	120
Capacitor Temperature Rating	100°C (212°F)
Sound Rating	
Additional Info	Thermally protected

Electrical characteristics

Supply Current Frequency	60 Hz

Order information

Type	No. Items Per Sales Unit	No. Items Per Standard Package
Standard Pack	1	6

Specifications by lamp & line voltage

Lamp	Specifications by line voltage		
S55		**120**	**120**
150W High Pressure Sodium	System Wattage (W)	171	171
	Nominal Current	1.50 A	3.20 A
250W Quartz Metal Halide	Ballast Factor	1	1
	Ballast Efficiency Factor	1.46	1.46
	Max Input Current	2.40 A	4.40 A
	Starting Current	2.20 A	4.40 A
	Open Circuit Voltage	120V	120V
	Drop Out Voltage	96V	96V
	Power Factor (>=)%	90	80
	Min. Starting Temp (°F/°C)	-22 / -30	-22 / -30
	Fuse Rating	8	15
	UL Bench Top Rise	A	A

Dimensions

Wiring diagram HID H1 – see example on page 18-67	
Case dimensions – Ref Drawing 1 – see page 18-70	
Length (L)	4.00 in (102 mm)
Width (W)	0.75 in (19 mm)
Height (H)	0.1 in (2.36 mm)
Mounting dimensions	
Bracket Length (BL)	4.00 in (102 mm)
Mount Length (M)	3.30 in (85 mm)
Mount Width (X or F)	
Mount Slots (MS)	0.25 in (6 mm)
A	2.0
B	3.0
Weight	3.50 lbs
Exit Type	Side
Nominal Length	
Frame Size (H x L)	2.813 in x 3.939 in
Lead lengths	
Black	
Blue	
White	

Safety and performance

cUL Listed UL Listed

HID Accessories and Replacement Capacitors
HID Electronic and Electromagnetic Ballasts

HID Accessories

HID Accessories	Prod Code	Description	Application	Units Per Carton
Replacement Ignitors for Pulse Start Lamps (MH & HPS)	75440	MH100-3A MH350-1A	Ignitor for MH 30 50 70 100 Ignitor MH 150W, PS 175 250 320 350 400W	20
	75441	MH750-1B	Ignitor MH PS 750W	
	86635	HPS150-3A	Ignitor HPS 150 watts or less except 150w-S56	20
	86641	HPS400-3A	Ignitor HPS 200-400 watts & 150w S56	10
	75439	HPS1000-4B	Ignitor HPS 1000W, PS 1000W	
Other Accessories	47621	000-8724	HIDP Adjustable Mounting Bracket Hardware Kit	100

Ignitor Specifications

Ballast Product Code	86635	86641	75439	75440	75441
Ignitor Model No.	HPS150-3A	HPS400-3A	HPS1000-4B	MH350-1A	MH750-1B
Description	Ignitor HPS 150 watts or less except 150w-S56	Ignitor HPS 200-400 watts & 150w S56	Ignitor HPS 1000W, PS 1000W	Ignitor MH 150W, PS 175 250 320 350 400W	Ignitor MH PS 750W
Minimum Starting Voltage (V)	95	105	175	203	210
Pulse Height (kV)	2.5-4.0	2.5-4.0	3.0-5.0	3.0-4.0	3.0-4.0
Pulse Width (µs)	> 1.0	> 1.0	> 4.0	> 1.0	> 1.5
Pulse Frequency (Hz)	> 100	> 100	> 100	> 100	> 100
Ballast To Lamp Distance	10FT	10FT	5FT	5FT	5FT
Maximum Case Temperature	105°C	105°C	105°C	105°C	105°C
Starting Current (rms) Min	0.83	4.6	4.7	0.68	4.5
Starting Current (rms) Max	1.25	7.5	8	1.1	5.8
Diameter	1.40"	1.40"	1.70"	1.40"	2 5/32" x 15/16" (oval)
Height	2.55"	2.55"	2.80"	2.55"	3.0"

Replacement Capacitors

Prod Code	Description	Application	Capacity (uF)	VAC	Diameter (inches)	Case Ht. (inches)	Units Per Carton
75433	005-1184-MF	10.0 MFD 400V 90C 2.4 MEG 1.50 oval 2.7 ht					20
75668	005-2779-MF	24.0 MFD 480V 90C 1.75 oval 3.9 ht					20
75429	GECAP-5/300V-D	Capacitor 5MFD 280V Dry	5	300	1.2	1.97	20
75425	GECAP-6/280V-D	Capacitor 6MFD 280V Dry	6	300	1.2	2.76	20
75430	GECAP-7/300V-D	Capacitor 7MFD 300V Dry	7	300	1.2	2.76	20
75426	GECAP-8/280V-D	Capacitor 8MFD 280V Dry	8	300	1.2	2.76	20
75433	GECAP-10/400V-O	Capacitor 10MFD 400V Oil	10	400	1.75	2.38	20
75427	GECAP-12/280V-D	Capacitor 12MFD 280V Dry	12	300	1.2	3.15	20
75669	GECAP-14/280V-D	Capacitor 14MFD 280V Dry	14	300	1.4	2.76	20
75434	GECAP-15/400V-O	Capacitor 15MFD 400V Oil	15	400	1.75	2.88	20
75428	GECAP-16/280V-D	Capacitor 16MFD 280V Dry	16	300	1.4	3.15	20
75431	GECAP-21/345V-O	Capacitor 21MFD 345V Oil	21	345	1.75	3.13	20
75432	GECAP-22.5/345V-O	Capacitor 22.5MFD 345V Oil	22.5	345	1.75	3.75	20
75435	GECAP-24/400V-O	Capacitor 24MFD 400V Oil	24	400	1.75	3.75	20
75668	GECAP-24/480V-O	Capacitor 24MFD 480V Oil	24	480	2	3.91	20
75437	GECAP-26/525V-O	Capacitor 26MFD 525V Oil	26	525	2	3.91	20
75436	GECAP-28/400V-O	Capacitor 28MFD 400V Oil	28	400	1.75	3.88	20
75438	GECAP-32/525V-O	Capacitor 32MFD 525V Oil	32	525	2	3.91	20
75422	GECAP-35/240V-D	Capacitor 35MFD 240V Dry	35	240	1.5	3.75	20
75423	GECAP-55/240V-D	Capacitor 55MFD 240V Dry	55	240	1.5	3.75	20

See page E-1 for warranty information.

Capacitors and Ignitors

						Kit Capacitor				Replacement Capacitor				Replacement Ignitor	
Lamp Type	Use with ANSI Lamp Types	Watts	Prod Code	New GE Description	Description	Cap.	uF	Min Vac	UL Min Vac	Prod Code	Desc.	Actual electrial voltage of capacitor both ends	Original	Prod Code	Ignitor
Metal Halide	M110	50	86824	GEM50MLTLC3D-5	1- 50w MH M110 or M148 Quad (120/208/240/277V)	6MFD 280V	6	280	280	75425	GECAP-6/280V-D		GECAP-6/280V-D	75440	MH350-1A
	M148	50	86824	GEM50MLTLC3D-5	1- 50w MH M110 or M148 Quad (120/208/240/277V)	6MFD 280V	6	280	280	75425	GECAP-6/280V-D		GECAP-6/280V-D	75440	MH350-1A
	M143	70	86839	GEM7048TLC3D-5	1- 70w MH M 98 or M143 480	8MFD 280V	8	280	280	75426	GECAP-8/280V-D		GECAP-8/280V-D	75440	MH350-1A
	M143	70	86847	GEM70MLTLC3D-5	1- 70w MH M 98 or M143 Quad (120/208/240/277V)	8MFD 280V	8	280	280	75426	GECAP-8/280V-D		GECAP-8/280V-D	75440	MH350-1A
	M143	70	78517	GEM70TRILC3-5	1- 70w MH M 98 or M143 Quad (120/208/240/277V)	8MFD 300V	8	300	280	75426	GECAP-8/280V-D	277V	GECAP-8/280V-D	75440	MH350-1A
	M85	70	86576	11210277CTC000C	1- 70w M85 120/277 Enclosed & Potted	Internal									
	M98	70	86578	11210506CTC000C	1- 70w M98 120/277 Enclosed & Potted	Internal									
	M98	70	86839	GEM7048TLC3D-5	1- 70w MH M 98 or M143 480	8MFD 280V	8	280	280	75426	GECAP-8/280V-D		GECAP-8/280V-D	75440	MH350-1A
	M98	70	86847	GEM70MLTLC3D-5	1- 70w MH M 98 or M143 Quad (120/208/240/277V)	8MFD 280V	8	280	280	75426	GECAP-8/280V-D		GECAP-8/280V-D	75440	MH350-1A
	M140	100	86667	GEM10048TLC3D-5	1- 100w MH M 90 or M140 480	12MFD 280V	12	280	280	75427	GECAP-12/280V-D		GECAP-12/280V-D	75440	MH350-1A
	M140	100	86675	GEM100MLTLC3D-5	1- 100w MH M 90 or M140 Quad (120/208/240/277V)	12MFD 280V	12	280	280	75427	GECAP-12/280V-D		GECAP-12/280V-D	75440	MH350-1A
	M140	100	78519	GEM100TRILC3-5	1- 100w MH M 90 or M140 Quad (120/208/240/277V)	12MFD 300V	12	300	280	75427	GECAP-12/280V-D	277V	GECAP-12/280V-D	75440	MH350-1A
	M90	100	86574	11210239CTC000I	1- 100w M90 120/277 Enclosed & Potted	Internal									
	M90	100	86667	GEM10048TLC3D-5	1- 100w MH M 90 or M140 480	12MFD 280V	12	280	280	75427	GECAP-12/280V-D		GECAP-12/280V-D	75440	MH350-1A
	M90	100	86675	GEM100MLTLC3D-5	1- 100w MH M 90 or M140 Quad (120/208/240/277V)	12MFD 280V	12	280	280	75427	GECAP-12/280V-D		GECAP-12/280V-D	75440	MH350-1A
	M92	100	86667	GEM10048TLC3D-5	1- 100w MH M 90 or M140 480	12MFD 280V	12	280	280	75427	GECAP-12/280V-D		GECAP-12/280V-D	75440	MH350-1A
	M92	100	86675	GEM100MLTLC3D-5	1- 100w MH M 90 or M140 Quad (120/208/240/277V)	12MFD 280V	12	280	280	75427	GECAP-12/280V-D		GECAP-12/280V-D	75440	MH350-1A
	M102	150	86711	GEM15048TLC3D-5	1- 150w MH M102 or M142 480	16MFD 280V	16	280	280	75428	GECAP-16/280V-D		GECAP-16/280V-D	75440	MH350-1A
	M102	150	86718	GEM150MLTLC3D-5	1- 150w MH M102 or M142 Quad (120/208/240/277V)	16MFD 280V	16	280	280	75428	GECAP-16/280V-D		GECAP-16/280V-D	75440	MH350-1A
	M102	150	78520	GEM150TRILC3-5	1- 150w MH M102 or M142 Quad (120/208/240/277V)	16MFD 300V	16	300	280	75428	GECAP-16/280V-D	277V	GECAP-16/280V-D	75440	MH350-1A
	M107	150	86711	GEM15048TLC3D-5	1- 150w MH M102 or M142 480	16MFD 280V	16	280	280	75428	GECAP-16/280V-D		GECAP-16/280V-D	75440	MH350-1A
	M107	150	86718	GEM150MLTLC3D-5	1- 150w MH M102 or M142 Quad (120/208/240/277V)	16MFD 280V	16	280	280	75428	GECAP-16/280V-D		GECAP-16/280V-D	75440	MH350-1A
	M142	150	86711	GEM15048TLC3D-5	1- 150w MH M102 or M142 480	16MFD 280V	16	280	280	75428	GECAP-16/280V-D		GECAP-16/280V-D	75440	MH350-1A
	M142	150	86718	GEM150MLTLC3D-5	1- 150w MH M102 or M142 Quad (120/208/240/277V)	16MFD 280V	16	280	280	75428	GECAP-16/280V-D		GECAP-16/280V-D	75440	MH350-1A
	M57	175	86563	1110245SCTC000I	1- 175w M57 120/277 Enclosed & Potted	Internal									
	M57	175	87210	GEM175ML5AC3-5	1- 175w MH M 57 or H 39 5-Tap (120/208/240/277/480V)	10MFD 400V	10	400	400	75433	GECAP-10/400V-O		005-1184-MF		N/A
	M57	175	86741	GEM175MLTAC3-5	1- 175w MH M 57 or H 39 Quad (120/208/240/277V)	10MFD 400V	10	400	400	75433	GECAP-10/400V-O		005-1184-MF		N/A
	M57	175	78521	GEM175TRIAC3-5	1- 175w MH M 57 or H 39 Quad (120/208/240/277V)	12MFD 450V	12	450	400	75433		370V	005-1184-MF		N/A
	M58	250	86564	1110246CTC000C	1- 250w M58 120/277 Enclosed & Potted	Internal									

See page E-1 for warranty information.

HID Accessories and Replacement Capacitors
HID Electronic and Electromagnetic Ballasts

						Kit Capacitor				Replacement Capacitor				Replacement Ignitor	
Lamp Type	Use with ANSI Lamp Types	Watts	Prod Code	New GE Description	Description	Cap.	uF	Min Vac	UL Min Vac	Prod Code	Desc.	Actual electrial voltage of capacitor both ends	Original	Prod Code	Ignitor
Metal Halide	M58	250	87211	GEM250ML5AC3-5	1- 250w MH M 58 or H 37 5-Tap (120/208/240/277/480V)	15MFD 400V	15	400	400	75434	GECAP-15/400V-O		005-1185-MF		N/A
	M58	250	87212	GEM250ML5AC4-5	1- 250w MH M 58 or H 37 5-Tap (120/208/240/277/480V)	15MFD 400V	15	400	400	75434	GECAP-15/400V-O		005-1185-MF		N/A
	M58	250	86765	GEM250MLTAC3-5	1- 250w MH M 58 or H 37 Quad (120/208/240/277V)	15MFD 400V	15	400	400	75434	GECAP-15/400V-O		005-1185-MF		N/A
	M58	250	78522	GEM250TRIAC4-5	1- 250w MH M 58 or H 37 Quad (120/208/240/277V)	15MFD 450V	15	450	400	75434	GECAP-15/400V-O	370V	005-1185-MF		N/A
	M59	400	42670	1110-247SC-TC	1- 400w M59 120/277 Enclosed & Potted F-can	Internal									
	M59	400	80728	1111-247SCTC000I	1- 400w M59 120/277 Enclosed & Potted	Internal									
	M59	400	86803	GEM40048TAC4-5	1- 400w MH M 59 or H 33 480	24MFD 400V	24	400	400	75435	GECAP-24/400V-O		005-2779-MF		N/A
	M59	400	72300	GEM400ML5AA4-5	1- 400w MH M59 or H33 5-Tap (120/208/240/277/480V) Al C&C	24MFD 400V	24	400	360	75435	GECAP-24/400V-O		005-2779-MF		N/A
	M59	400	72149	GEM400MLTAA4-5	1- 400w MH M 59 or H 33 Quad (120/208/240/277V) Al C&C	24MFD 400V	24	400	400	75435	GECAP-24/400V-O		005-2779-MF		N/A
	M59	400	78523	GEM400TRIAC4-5	1- 400w MH M 59 or H 33 Quad (120/208/240/277V) Al C&C	24MFD 450V	24	450	400	75668	GECAP-24/480V-O	370V	005-2779-MF		N/A
	M47	1000	86650	GEM100048TAC5-5	1- 1000w MH M 47 or H 36 480	24MFD 480V	24	480	480	75668	GECAP-24/480V-O		005-2779-MF		N/A
	M47	1000	87213	GEM1000ML5AA5-5	1- 1000w MH M 47 or H 36 5-Tap (120/208/240/277/480V)	24MFD 480V	24	480	480	75668	GECAP-24/480V-O		005-2779-MF		N/A
	M47	1000	86655	GEM1000MLTAA5-5	1- 1000w MH M 47 or H 36 Quad (120/208/240/277V)	24MFD 480V	24	480	480	75668	GECAP-24/480V-O		005-2779-MF		N/A
	M47	1000	78524	GEM1000TRIAC5-5	1- 1000w MH M 47 or H 36 Quad (120/208/240/277V)	24MFD 540V	24	540	480	75668	GECAP-24/480V-O	450V	005-2779-MF		N/A
	M48	1500	86693	GEM150048TAC5-5	1- 1500w MH M 48 480	32MFD 525V	32	525	525	75438	GECAP-32/525V-O		GECAP-32/525V-O		N/A
	M48	1500	86698	GEM1500MLTAC5-5	1- 1500w MH M 48 Quad (120/208/240/277V)	32MFD 525V	32	525	525	75438	GECAP-32/525V-O		GECAP-32/525V-O		N/A
Pulse Start	M156	20	87490	GEMH20-MLF-120	1 - 20W M156 120V Electronic HID	Internal									Internal
	M130	39	87501	GEMH39-MSF-120	1 - 39W M130 120V Electronic HID	Internal									Internal
	C148	50	87516	GEMH50-MSF-120	1 - 50W M110 M/C148 120V Electronic HID	Internal									Internal
	M110	50	87516	GEMH50-MSF-120	1 - 50W M110 M/C148 120V Electronic HID	Internal									Internal
	M148	50	87516	GEMH50-MSF-120	1 - 50W M110 M/C148 120V Electronic HID	Internal									Internal
	C143	70	87531	GEMH70-MSF-120	1 - 70W M98 M/C143 120V Electronic HID	Internal									Internal
	C143	70	87546	GEMH70-SLJ-MV	1 - 70W M98 M/C143 120V-277V Electronic HID	Internal									Internal
	M139	70	87531	GEMH70-MSF-120	1 - 70W M98 M/C143 120V Electronic HID	Internal									Internal
	M139	70	87531	GEMH70-MSF-120	1 - 70W M98 M/C143 120V Electronic HID	Internal									Internal
	M143	70	87531	GEMH70-MSF-120	1 - 70W M98 M/C143 120V Electronic HID	Internal									Internal
	M143	70	87546	GEMH70-SLJ-MV	1 - 70W M98 M/C143 120V-277V Electronic HID	Internal									Internal
	M98	70	87531	GEMH70-MSF-120	1 - 70W M98 M/C143 120V Electronic HID	Internal									Internal
	M98	70	87546	GEMH70-SLJ-MV	1 - 70W M98 M/C143 120V-277V Electronic HID	Internal									Internal
	C140	100	87561	GEMH100-SLJ-MV	1 - 100W M90 M/C140 120V-277V Electronic HID	Internal									Internal
	M140	100	87561	GEMH100-SLJ-MV	1 - 100W M90 M/C140 120V-277V Electronic HID	Internal									Internal

See page E-1 for warranty information.

HID Accessories and Replacement Capacitors
HID Electronic and Electromagnetic Ballasts

						Kit Capacitor				Replacement Capacitor				Replacement Ignitor	
Lamp Type	Use with ANSI Lamp Types	Watts	Prod Code	New GE Description	Description	Cap.	uF	Min Vac	UL Min Vac	Prod Code	Desc.	Actual electrial voltage of capacitor both ends	Original	Prod Code	Ignitor
Pulse Start	M90	100	87561	GEMH100-SLJ-MV	1 - 100W M90 M/C140 120V-277V Electronic HID	Internal									Internal
	C142	150	87576	GEMH150-SLJ-MV	1 - 150W M102 M/C142 120V-277V Electronic HID	Internal									Internal
	M102	150	87576	GEMH150-SLJ-MV	1 - 150W M102 M/C142 120V-277V Electronic HID	Internal									Internal
	M142	150	87576	GEMH150-SLJ-MV	1 - 150W M102 M/C142 120V-277V Electronic HID	Internal									Internal
	M137	175	86876	GEP17548TAC3-5	1- 175w PS M137 or M152 480	10MFD 400V	10	400	400	75433	GECAP-10/400V-O		005-1184-MF	75440	MH350-1A
	M137	175	86885	GEP175MLTAC3-5	1- 175w PS M137 or M 152 Quad (120/208/240/277V)	10MFD 400V	10	400	400	75433	GECAP-10/400V-O		005-1184-MF	75440	MH350-1A
	M152	175	86876	GEP17548TAC3-5	1- 175w PS M137 or M152 480	10MFD 400V	10	400	400	75433	GECAP-10/400V-O		005-1184-MF	75440	MH350-1A
	M152	175	86885	GEP175MLTAC3-5	1- 175w PS M137 or M 152 Quad (120/208/240/277V)	10MFD 400V	10	400	400	75433	GECAP-10/400V-O		005-1184-MF	75440	MH350-1A
	M152	175	78525	GEP175TRIAC3-5	1- 175w PS M137 or M 152 Quad (120/208/240/277V)	12MFD 450V	12	450	400	75433		330V	005-1184-MF	75440	MH350-1A
	M136	250	78526	GEP200TRIAC3-5	1- 250w PS M138 or M153 Quad (120/208/240/277V)	16MFD 450V	16	450	400				005-1185-MF	75440	MH350-1A
	CMH250	250	29377	GE-MH-250-400-MA	1 - 250 to 400W UltraMax HID Electronic 208-277 50-60Hz	Internal									Internal
	CMH250	250	89646	GEMH250-400MV50	1 - 250 to 400W UltraMax HID Dimming 208-277 50-60Hz	Internal									Internal
	M138	250	86926	GEP25048TAC4-5	1- 250w PS M138 or M153 480	15MFD 400V	15	400	400	75434	GECAP-15/400V-O		005-1185-MF	75440	MH350-1A
	M138	250	86935	GEP250MLTAC4-5	1- 250w PS M138 or M153 Quad (120/208/240/277V)	15MFD 400V	15	400	400	75434	GECAP-15/400V-O		005-1185-MF	75440	MH350-1A
	M138	250	78527	GEP250TRIAC4-5	1- 250w PS M138 or M153 Quad (120/208/240/277V)	15MFD 450V	15	450	400	75434	GECAP-15/400V-O	370V	005-1185-MF	75440	MH350-1A
	M153	250	29377	GE-MH-250-400-MA	1 - 250 to 400W UltraMax HID Electronic 208-277 50-60Hz	Internal									Internal
	M153	250	89646	GEMH250-400MV50	1 - 250 to 400W UltraMax HID Dimming 208-277 50-60Hz	Internal									Internal
	M153	250	86926	GEP25048TAC4-5	1- 250w PS M138 or M153 480	15MFD 400V	15	400	400	75434	GECAP-15/400V-O		005-1185-MF		
	M153	250	86935	GEP250MLTAC4-5	1- 250w PS M138 or M153 Quad (120/208/240/277V)	15MFD 400V	15	400	400	75434	GECAP-15/400V-O		005-1185-MF	75440	MH350-1A
	CMH320	320	29377	GE-MH-250-400-MA	1 - 250 to 400W UltraMax HID Electronic 208-277 50-60Hz	Internal									Internal
	CMH320	320	89646	GEMH250-400MV50	1 - 250 to 400W UltraMax HID Dimming 208-277 50-60Hz	Internal									Internal
	M132	320	29377	GE-MH-250-400-MA	1 - 250 to 400W UltraMax HID Electronic 208-277 50-60Hz	Internal									Internal
	M132	320	89646	GEMH250-400MV50	1 - 250 to 400W UltraMax HID Dimming 208-277 50-60Hz	Internal									Internal
	M132	320	86952	GEP32048TAC4-5	1- 320w PS M132 or M154 480	21MFD 345V	21	345	345	75431	GECAP-21/345V-O		GECAP-21/345V-O	75440	MH350-1A
	M132	320	86959	GEP320MLTAC4-5	1- 320w PS M132 or 154 Quad (120/208/240/277V)	21MFD 345V	21	345	345	75431	GECAP-21/345V-O		GECAP-21/345V-O	75440	MH350-1A
	M132	320	78528	GEP320TRIAC4-5	1- 320w PS M132 or M154 TRI-Voltage 120 277 347	21MFD 450V	21	450		75431	GECAP-21/345V-O	360V		75440	MH350-1A
	M154	320	29377	GE-MH-250-400-MA	1 - 250 to 400W UltraMax HID Electronic 208-277 50-60Hz	Internal									Internal
	M154	320	89646	GEMH250-400MV50	1 - 250 to 400W UltraMax HID Dimming 208-277 50-60Hz	Internal									Internal
	M154	320	86952	GEP32048TAC4-5	1- 320w PS M132 or M154 480	21MFD 345V	21	345	345	75431	GECAP-21/345V-O		GECAP-21/345V-O	75440	MH350-1A
	M154	320	86959	GEP320MLTAC4-5	1- 320w PS M132 or M154 Quad (120/208/240/277V)	21MFD 345V	21	345	345	75431	GECAP-21/345V-O		GECAP-21/345V-O	75440	MH350-1A

See page E-1 for warranty information.

HID Accessories and Replacement Capacitors
HID Electronic and Electromagnetic Ballasts

						Kit Capacitor				Replacement Capacitor				Replacement Ignitor	
Lamp Type	Use with ANSI Lamp Types	Watts	Prod Code	New GE Description	Description	Cap.	uF	Min Vac	UL Min Vac	Prod Code	Desc.	Actual electrial voltage of capacitor both ends	Original	Prod Code	Ignitor
	M154	320	86968	GEP320TRIAC4-5	1- 320w PS M132 or M154 TRI-Voltage 120 277 347	21MFD 345V	21	345		75431	GECAP-21/345V-O		GECAP-21/345V-O	75440	MH350-1A
	CMH350	350	29377	GE-MH-250-400-MA	1 - 250 to 400W UltraMax HID Electronic 208-277 50-60Hz	Internal									Internal
	CMH350	350	89646	GEMH250-400MV50	1 - 250 to 400W UltraMax HID Dimming 208-277 50-60Hz	Internal									Internal
	M131	350	29377	GE-MH-250-400-MA	1 - 250 to 400W UltraMax HID Electronic 208-277 50-60Hz	Internal									Internal
	M131	350	89646	GEMH250-400MV50	1 - 250 to 400W UltraMax HID Dimming 208-277 50-60Hz	Internal									Internal
	M131	350	42692	GEP350277RCE-5	1- 350w PS M131 277 Reactor	22.5MFD 345V	22.5	345		75432	GECAP-225/345V-O		GECAP-22.5/345V-O	75440	MH350-1A
	M131	350	86984	GEP350MLTAC4-5	1- 350w PS M131 Quad (120/208/240/277V)	22.5MFD 345V	22.5	345	345	75432	GECAP-225/345V-O		GECAP-22.5/345V-O	75440	MH350-1A
	M131	350	78529	GEP350TRIAC4-5	1- 350w PS M131 Quad (120/208/240/277V)	22MFD 450V	22	450	345	75432		360V	GECAP-22.5/345V-O	75440	MH350-1A
	CMH400	400	29377	GE-MH-250-400-MA	1 - 250 to 400W UltraMax HID Electronic 208-277 50-60Hz	Internal									Internal
	CMH400	400	89646	GEMH250-400MV50	1 - 250 to 400W UltraMax HID Dimming 208-277 50-60Hz	Internal									Internal
	M135	400	29377	GE-MH-250-400-MA	1 - 250 to 400W UltraMax HID Electronic 208-277 50-60Hz	Internal									Internal
	M135	400	89646	GEMH250-400MV50	1 - 250 to 400W UltraMax HID Dimming 208-277 50-60Hz	Internal									Internal
	M135	400	86999	GEP40048TAC4-5	1- 400w PS M135 or M155 480	24MFD 400V	24	400	400	75435	GECAP-24/400V-O		005-2779-MF	75440	MH350-1A
	M135	400	87008	GEP400MLTAC4-5	1- 400w PS M135 or M155 Quad (120/208/240/277V)	24MFD 400V	24	400	400	75435	GECAP-24/400V-O		005-2779-MF	75440	MH350-1A
	M135	400	78530	GEP400TRIAC4-5	1- 400w PS M135 or M155 Quad (120/208/240/277V)	26MFD 450V	26	450	400	75437	GECAP-26/525V-O	360V	005-2779-MF	75440	MH350-1A
	M155	400	29377	GE-MH-250-400-MA	1 - 250 to 400W UltraMax HID Electronic 208-277 50-60Hz	Internal									Internal
	M155	400	89646	GEMH250-400MV50	1 - 250 to 400W UltraMax HID Dimming 208-277 50-60Hz	Internal									Internal
	M155	400	87008	GEP400MLTAC4-5	1- 400w PS M135 or M155 Quad (120/208/240/277V)	24MFD 400V	24	400	400	75435	GECAP-24/400V-O		005-2779-MF	75440	MH350-1A
	M155	400	86999	GEP40048TAC4-5	1- 400w PS M135 or M155 480	24MFD 400V	24	400	400	75435	GECAP-24/400V-O		005-2779-MF	75440	MH350-1A
	M149	750	46936	GEP75048TAC5-5	1-750w PS M149 480	28MFD 400V	28	400	400	75436	GECAP-28/400V-O		GECAP-28/400V-O	75441	MH750-1B
	M149	750	46934	GEP750MLTAC5-5	1-750w PS M149 Quad (120/208/240/277V)	28MFD 400V	28	400	400	75436	GECAP-28/400V-O		GECAP-28/400V-O	75441	MH750-1B
	M149	750	78531	GEP750TRIAC5-5	1-750w PS M149 Quad (120/208/240/277V)	28MFD 450V	28	450	400	75436	GECAP-28/400V-O	405V	GECAP-28/400V-O	75441	MH750-1B
	M141	1000	72282	GEP1000ML5AC5-5	1-1000w PS M141 5-Tap (120/208/240/277/480V)	24MFD 480V	24	480	480	75668	GECAP-24/480V-O		005-2779-MF	75439	HPS1000-4B
	M141	1000	72281	GEP1000MLTAC5-5	1-1000w PS M141 Quad (120/208/240/277V)	24MFD 480V	24	480	480	75668	GECAP-24/480V-O		005-2779-MF	75439	HPS1000-4B
	M141	1000	78532	GEP1000TRIAC5-5	1-1000w PS M141 Quad (120/208/240/277V)	25MFD 450V	25	450	480	75668		430V	005-2779-MF	75439	HPS1000-4B
High Pressure Sodium	S68	50	87152	GES50MLTLC3D-5	1- 50w HPS S68 Quad (120/208/240/277V)	5MFD 280V	5	300	300	75429	GECAP-5/300V-D		GECAP-5/300V-D	86635	HPS150-3A
	S62	70	86596	12210237CTC000I	1- 70w S62 120/277 E & P F-can built-in starter	Internal									Internal
	S62	70	86605	1233142U000I	1- 70w S62 120 Reactor-NPF	Internal									Internal
	S68	70	78533	GES50TRILC3-5	1- 70w HPS S62 Quad (120/208/240/277V)	5MFD 300V	5	300	300	75430		277V	GECAP-7/300V-D	86635	HPS150-3A
	S62	70	86456	GES7048TLC3D-5	1- 70w HPS S62 480V	7MFD 300V	7	300	300	75430	GECAP-7/300V-D		GECAP-7/300V-D	86635	HPS150-3A

See page E-1 for warranty information.

HID Accessories and Replacement Capacitors
HID Electronic and Electromagnetic Ballasts

						Kit Capacitor				Replacement Capacitor				Replacement Ignitor	
Lamp Type	Use with ANSI Lamp Types	Watts	Prod Code	New GE Description	Description	Cap.	uF	Min Vac	UL Min Vac	Prod Code	Desc.	Actual electrial voltage of capacitor both ends	Original	Prod Code	Ignitor
High Pressure Sodium	S62	70	86587	GES70MLTLC3D-5	1- 70w HPS S62 Quad (120/208/240/277V)	7MFD 300V	7	300	300	75430	GECAP-7/300V-D		GECAP-7/300V-D	86635	HPS150-3A
	S62	70	78534	GES70TRILC3-5	1- 70w HPS S62 Quad (120/208/240/277V)	7MFD 300V	7	300	300	75430	GECAP-7/300V-D		GECAP-7/300V-D	86635	HPS150-3A
	S54	100	87068	GES10048TLC3D-5	1- 100w HPS S54 480V	10MFD 280V	10	280	280	75433	GECAP-10/400V-O		005-1184-MF	86635	HPS150-3A
	S54	100	87074	GES100MLTLC3D-5	1- 100w HPS S54 Quad (120/208/240/277V)	10MFD 280V	10	280	280	75433	GECAP-10/400V-O		005-1184-MF	86635	HPS150-3A
	S54	100	78535	GES100TRILC3-5/2	1- 100w HPS S54 Quad (120/208/240/277V)	10MFD 300V	10	300	280	75433	GECAP-10/400V-O	277V	005-1184-MF	86635	HPS150-3A
	S55	150	86606	1233154U000I	1- 150w S55 120 Reactor-NPF	Internal									Internal
	S55	150	87087	GES15048TLC3D-5	1- 150w HPS S55 480V	14MFD 280V	14	280	280	75669	GECAP-14/280V-D		GECAP-14/280V-D	86635	HPS150-3A
	S55	150	87094	GES150MLTLC3D-5	1- 150w HPS S55 Quad (120/208/240/277V)	14MFD 280V	14	280	280	75669	GECAP-14/280V-D		GECAP-14/280V-D	86635	HPS150-3A
	S55	150	78536	GES150TRILC3-5	1- 150w HPS S55 Quad (120/208/240/277V)	14MFD 300V	14	300	280	75669	GECAP-14/280V-D	277V	GECAP-14/280V-D	86635	HPS150-3A
	S50	250	87214	GES250ML5AC4-5	1- 250w HPS S50 5-Tap (120/208/240/277/480V)	35MFD 240V	35	240	240	75422	GECAP-35/240V-O		GECAP-35/240V-O	86641	HPS400-3A
	S50	250	87121	GES250MLTAC4-5	1- 250w HPS S50 Quad (120/208/240/277V)	35MFD 240V	35	240	240	75422	GECAP-35/240V-O		GECAP-35/240V-O	86641	HPS400-3A
	S50	250	78537	GES250TRIAC4-5	1- 250w HPS S50 Quad (120/208/240/277V)	33MFD 300V	33	300	240	75422		240	GECAP-35/240V-O	86641	HPS400-3A
	S51	400	87198	GES40048TAC4-5	1- 400w HPS S51 480V in smaller frame	55MFD 240V	55	240	240	75423	GECAP-55/240V-O		GECAP-55/240V-O	86641	HPS400-3A
	S51	400	87215	GES400ML5AC4-5	1- 400w HPS S51 5-Tap (120/208/240/277/480V)	55MFD 240V	55	240	240	75423	GECAP-55/240V-O		GECAP-55/240V-O	86641	HPS400-3A
	S51	400	87164	GES400MLTAC4-5	1- 400w HPS S51 Quad (120/208/240/277V)	55MFD 240V	55	240	240	75423	GECAP-55/240V-O		GECAP-55/240V-O	86641	HPS400-3A
	S51	400	78539	GES400TRIAC4-5	1- 400w HPS S51 Quad (120/208/240/277V)	55MFD 300V	55	300	240	75423	GECAP-55/240V-O	240	GECAP-55/240V-O	86641	HPS400-3A
	S52	1000	87048	GES100048TAC5-5	1- 1000w HPS S52 480V	26MFD 525V	26	525	525	75437	GECAP-26/525V-O		GECAP-26/525V-O	75439	HPS1000-4B
	S52	1000	87218	GES1000ML5AC5-5	1- 1000w HPS S52 5-Tap (120/208/240/277/480V)	26MFD 525V	26	525	525	75437	GECAP-26/525V-O		GECAP-26/525V-O	75439	HPS1000-4B
	S52	1000	87056	GES1000MLTAC5-5	1- 1000w HPS S52 Quad (120/208/240/277V)	26MFD 525V	26	525	525	75437	GECAP-26/525V-O		GECAP-26/525V-O	75439	HPS1000-4B
	S52	1000	78540	GES1000TRIAC5-5	1- 1000w HPS S52 Quad (120/208/240/277V)	26MFD 540V	26	540	525	75437	GECAP-26/525V-O	520	GECAP-26/525V-O	75439	HPS1000-4B
Mercury	H39	175	87210	GEM175ML5AC3-5	1- 175w MH M 57 or H 39 5-Tap (120/208/240/277/480V)	10MFD 400V	10	400	400	75433	GECAP-10/400V-O		005-1184-MF		N/A
	H39	175	86741	GEM175MLTAC3-5	1- 175w MH M 57 or H 39 Quad (120/208/240/277V)	10MFD 400V	10	400	400	75433	GECAP-10/400V-O		005-1184-MF		N/A
	H37	250	87211	GEM250ML5AC3-5	1- 250w MH M 58 or H 37 5-Tap (120/208/240/277/480V)	15MFD 400V	15	400	400	75434	GECAP-15/400V-O		005-1185-MF		N/A
	H37	250	87212	GEM250ML5AC4-5	1- 250w MH M 58 or H 37 5-Tap (120/208/240/277/480V)	15MFD 400V	15	400	400	75434	GECAP-15/400V-O		005-1185-MF		N/A
	H37	250	86765	GEM250MLTAC3-5	1- 250w MH M 58 or H 37 Quad (120/208/240/277V)	15MFD 400V	15	400	400	75434	GECAP-15/400V-O		005-1185-MF		N/A
	H33	400	86803	GEM40048TAC4-5	1- 400w MH M 59 or H 33 480	24MFD 400V	24	400	400	75435	GECAP-24/400V-O		005-2779-MF		N/A
	H33	400	72300	GEM400ML5AA4-5	1- 400w MH M59 or H33 5-Tap (120/208/240/277/480V) Al C&C	24MFD 400V	24	400	360	75435	GECAP-24/400V-O		005-2779-MF		N/A
	H33	400	72149	GEM400MLTAA4-5	1- 400w MH M 59 or H 33 Quad (120/208/240/277V) Al C&C	24MFD 400V	24	400	400	75435	GECAP-24/400V-O		005-2779-MF		N/A
	H36	1000	86650	GEM100048TAC5-5	1- 1000w MH M 47 or H 36 480	24MFD 480V	24	480	480	75668	GECAP-24/480V-O		005-2779-MF		N/A
	H36	1000	87213	GEM1000ML5AC5-5	1- 1000w MH M 47 or H 36 5-Tap (120/208/240/277/480V)	24MFD 480V	24	480	480	75668	GECAP-24/480V-O		005-2779-MF		N/A
	H36	1000	86655	GEM1000MLTAC5-5	1- 1000w MH M 47 or H 36 Quad (120/208/240/277V)	24MFD 480V	24	480	480	75668	GECAP-24/480V-O		005-2779-MF		N/A

See page E-1 for warranty information.

Wiring Diagrams
HID Electronic Ballasts

WD-eHID MLF/MSF

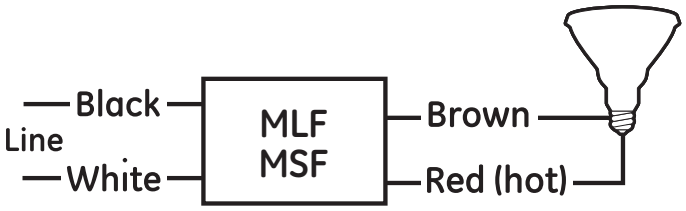

WD-eHID-SLJ

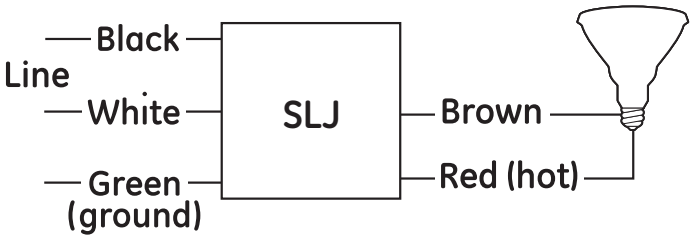

Igniter

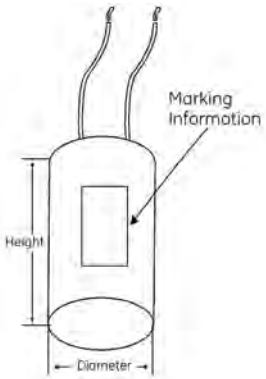

HID Lighting Capacitor

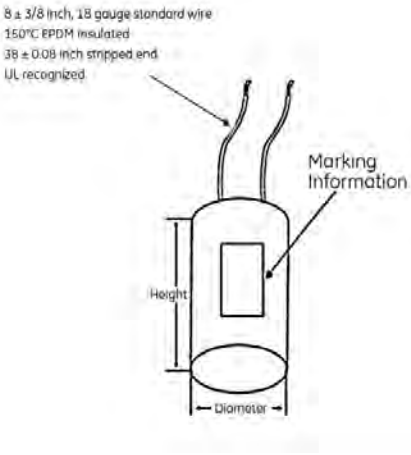

See page E-1 for warranty information.

MLF

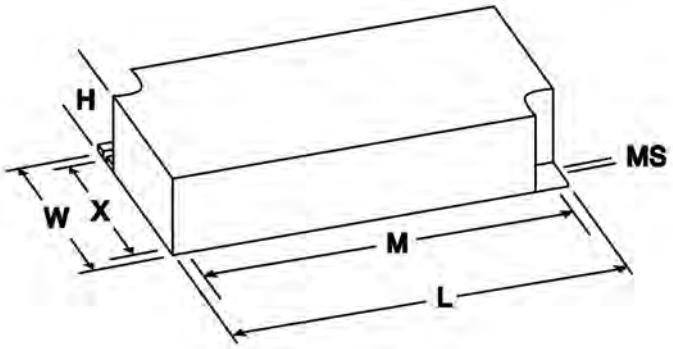

MSF

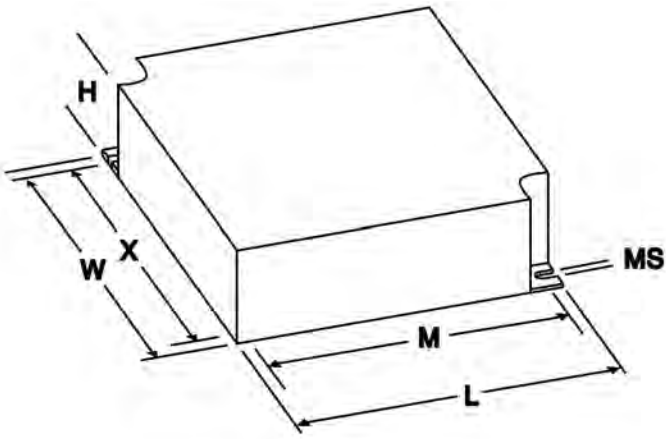

SLJ

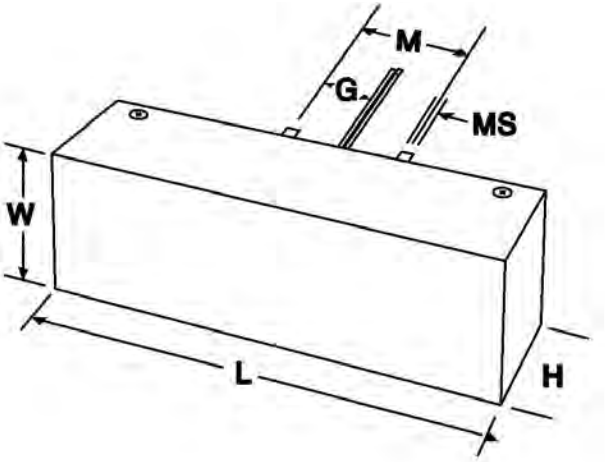

Fig. 2

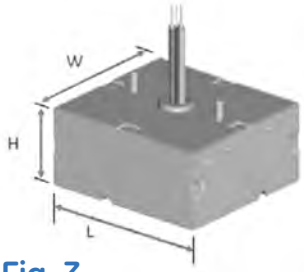

Fig. 3

See page E-1 for warranty information.

Wiring Diagrams
HID Electromagnetic Ballasts

HID H1

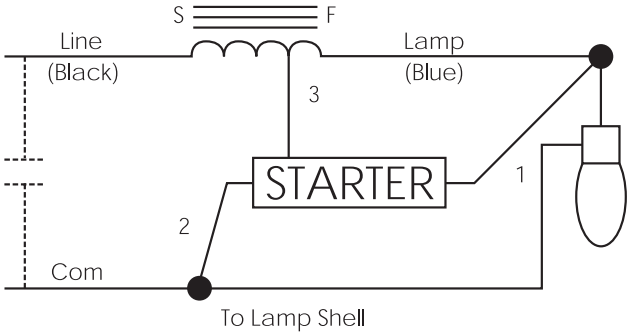

HID H1a

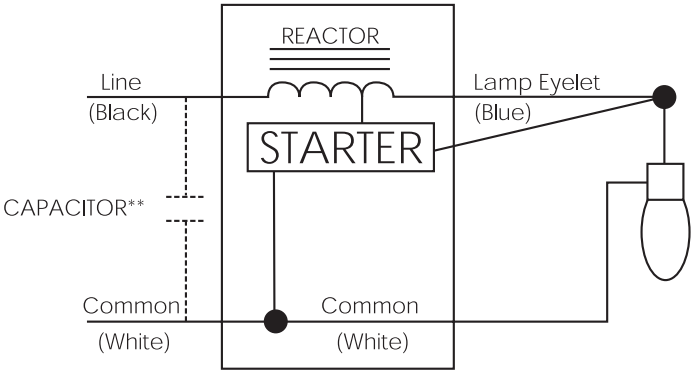

HID H34

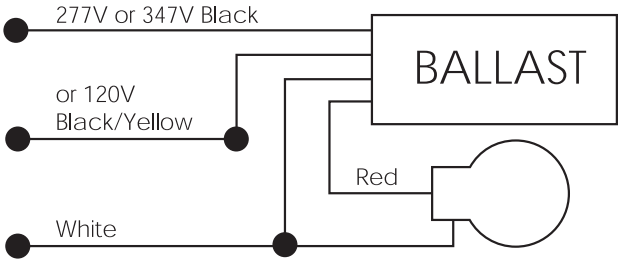

Insulate Unused Input
Lead for 300 Volts.

HID H36

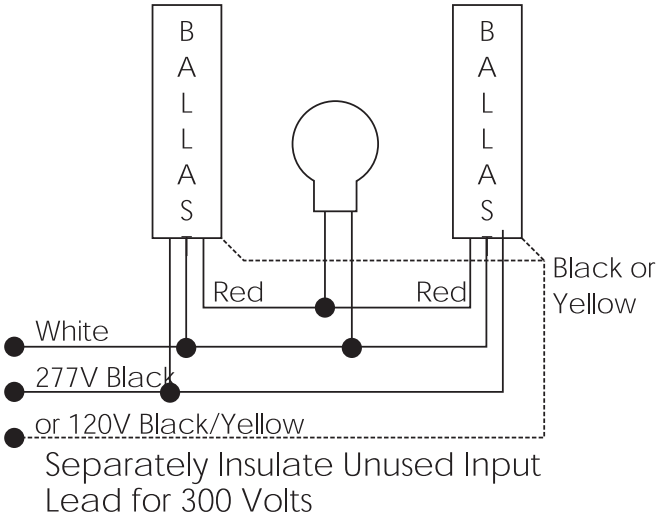

See page E-1 for warranty information.

Wiring Diagrams
HID Electromagnetic Ballasts

HID W-(A)

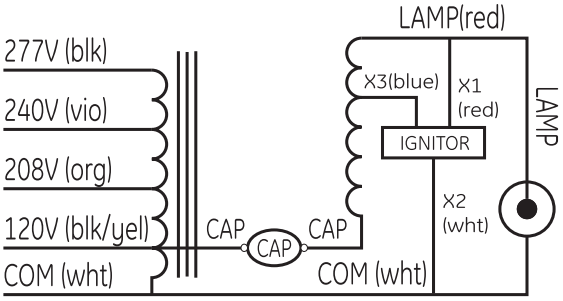

HID W-(B)

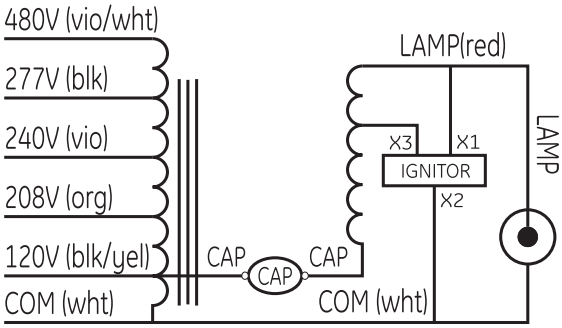

HID W-(C)

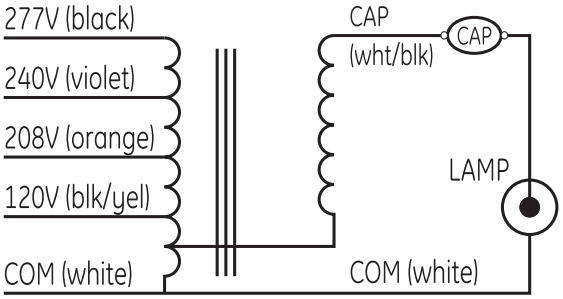

HID W-(D)

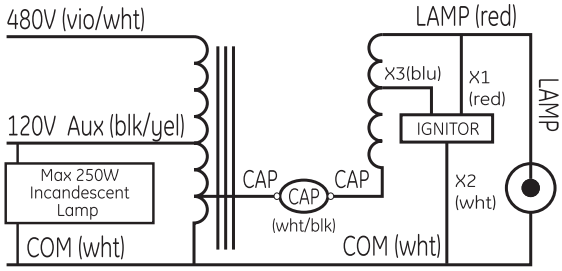

HID W-(E)

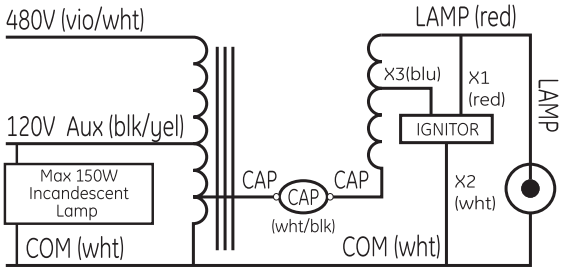

HID W-(F)

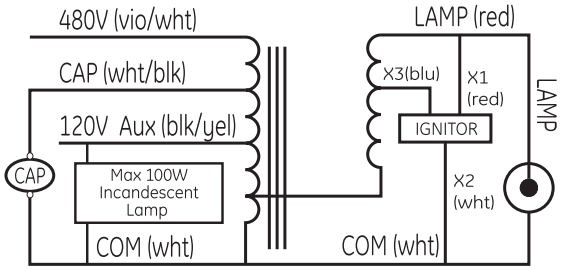

HID W-(H)

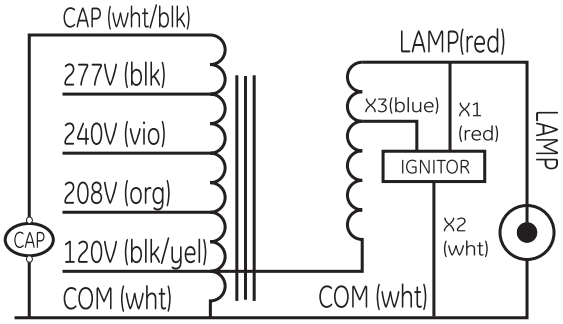

HID W-(J)

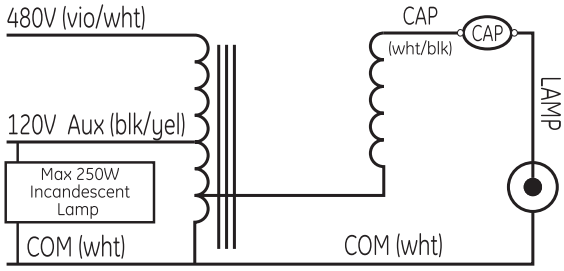

See page E-1 for warranty information.

Wiring Diagrams
HID Electromagnetic Ballasts

HID W-(K)

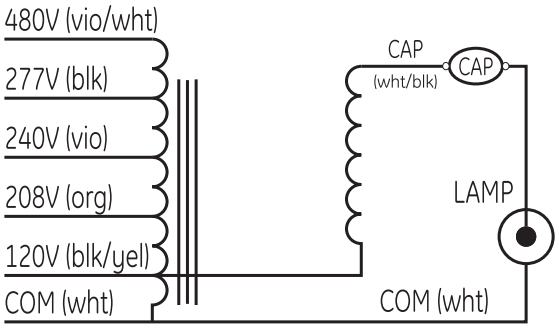

HID W-(L)

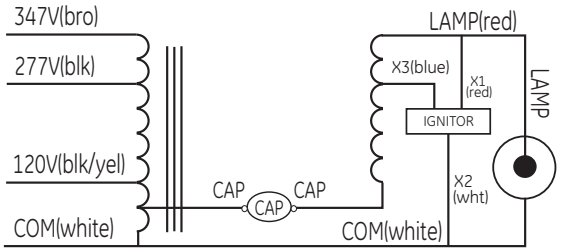

HID W-(M)

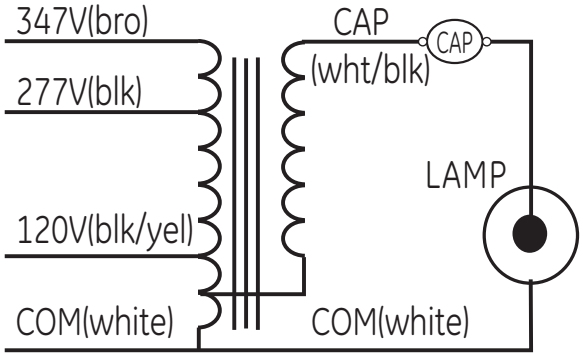

See page E-1 for warranty information.

Case Dimensions
HID Electromagnetic Ballasts

1

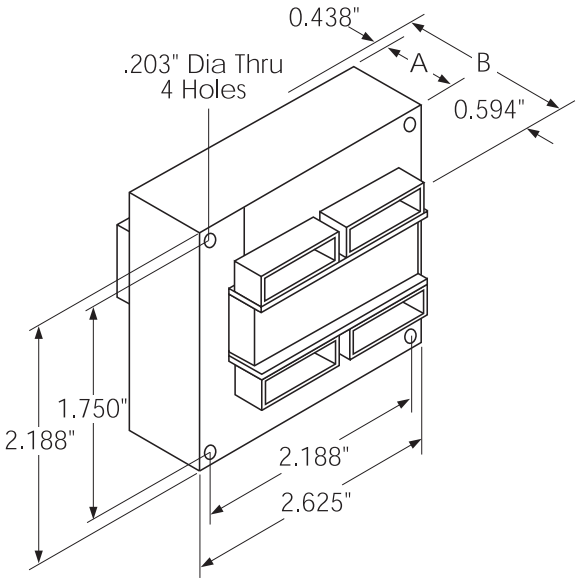

FCAN1

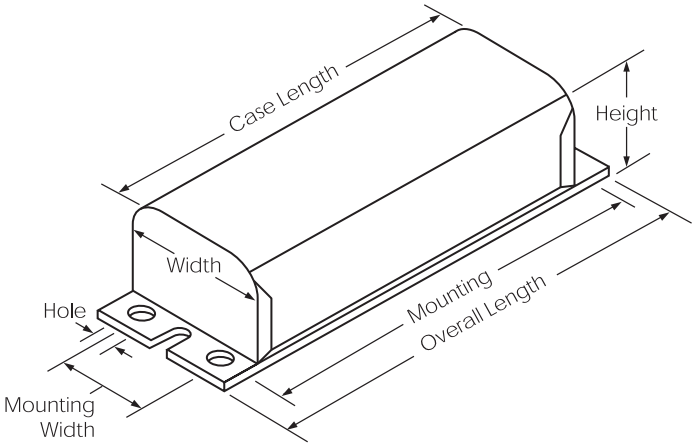

FCAN2

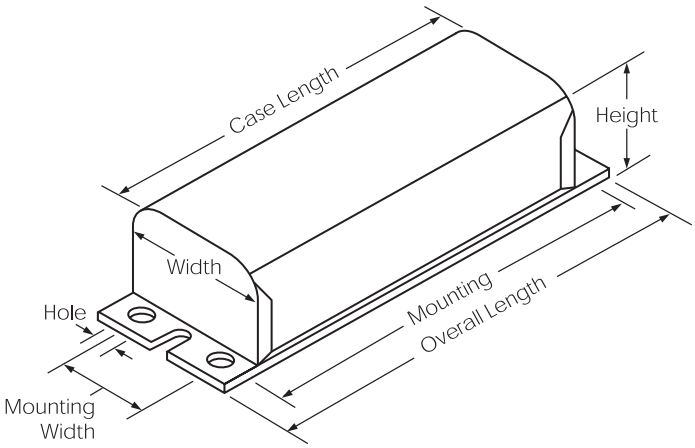

FCAN3

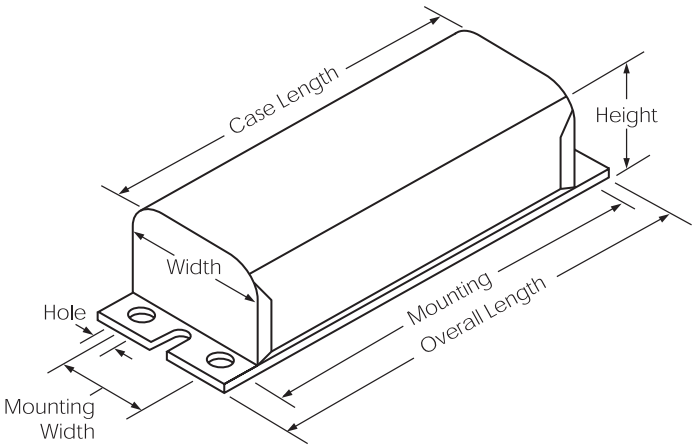

FCAN4

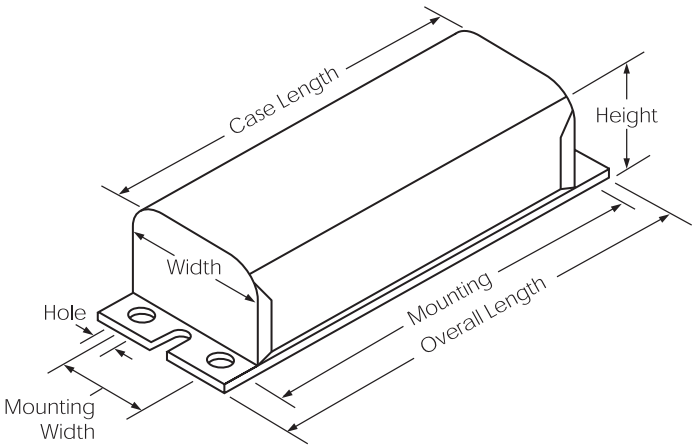

See page E-1 for warranty information.

Case Dimensions
HID Electromagnetic Ballasts

PC1

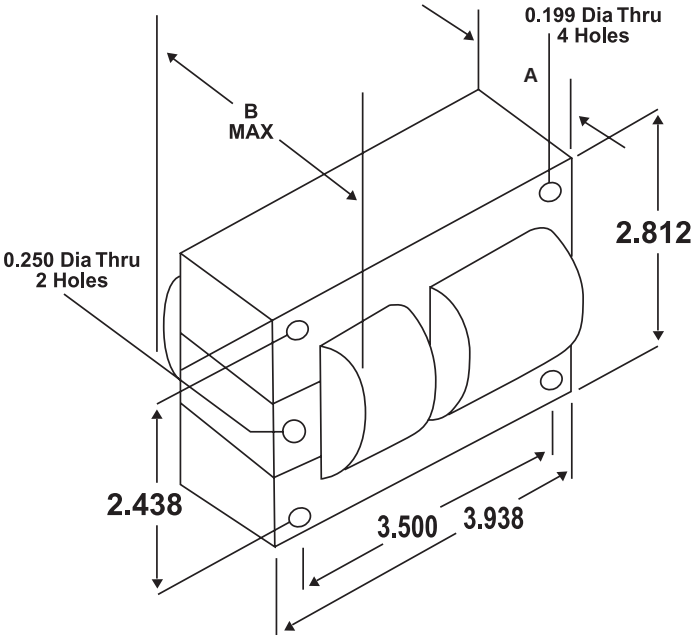

PC2

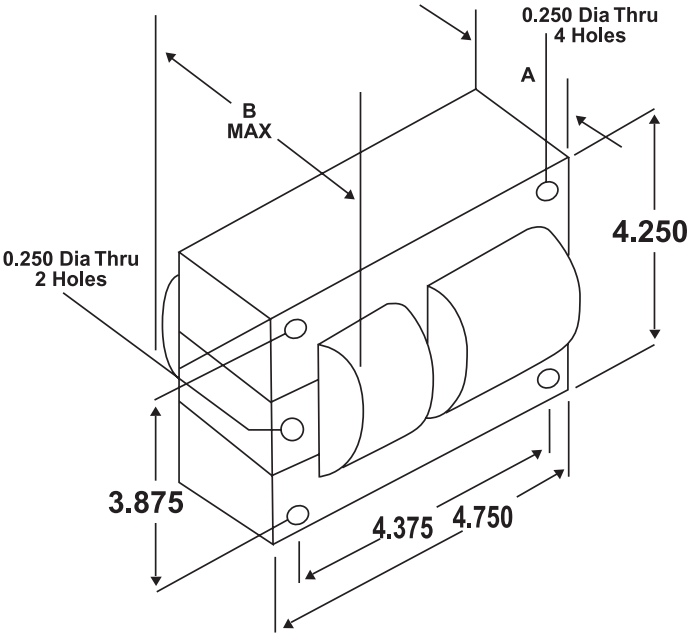

PC3

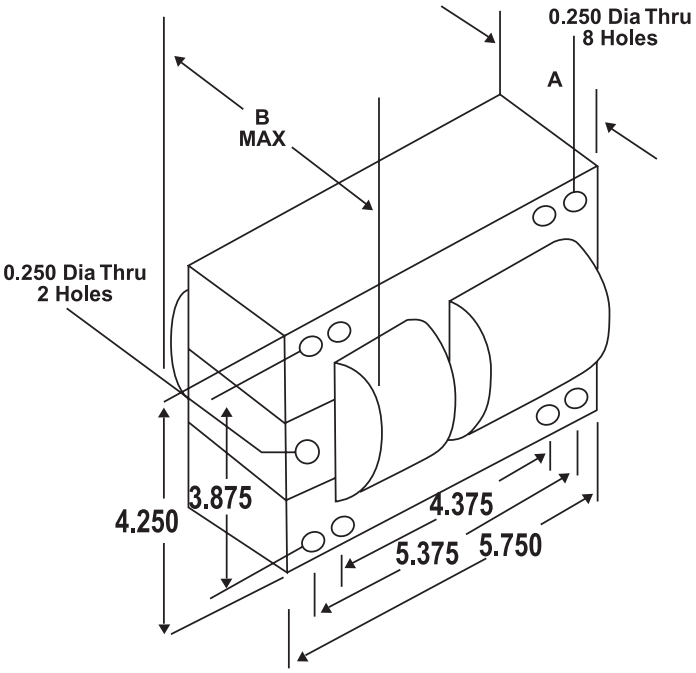

See page E-1 for warranty information.

Notes

See page E-1 for warranty information.

Table of Contents
LED Drivers and Halogen Transformers

GE Lightech™ LED Drivers and Halogen Transformers

One of the most trusted names in lighting is now powering even more innovative lighting solutions. We've combined our leadership, knowledge and experience to bring you effective, reliable GE Lightech™ LED Drivers and Halogen Transformers. Create next-generation lighting systems that push the boundaries of performance and redefine efficiency. Plus, you'll receive the convenience and ease of getting your drivers and transformers from the same source as your lamps and ballasts.

Key applications include signage, architectural, downlight, track lighting and much more.

Full Phase Control Dimmable Drivers

- Dimmable with most LEADING EDGE (Triac) and TRAILING EDGE (ELV) dimmers
- Deep dimming to 1%
- Wide power range (4-36W)
- High power factor
- Efficient
- Side Lead and Bottom Feed versions available
- cULus Recognized, Class 2, 47 CFR Part 15, Class B (Consumer)

Trailing Edge Dimmable Drivers

- Dimmable with TRAILING EDGE (ELV) dimmers
- Dimming to 10%
- Wide power range (4-36W)
- Universal input voltage (120-277V)
- High power factor
- Highly efficient
- Side Lead and Bottom Feed versions available
- Small case size
- cULus Recognized, Class 2, 47 CFR Part 15, Class B (Consumer)

Low-voltage Halogen Electronic Transformers

GE Lightech™ transformers offer outstanding dependability and efficiency, from smarter technology to longer life cycles, and everything in between. Features include:

- Utilizes a unique Auto-Thermal Regulation process – proportional dimming of output voltage over 90°C
- Self-preserving 125°C Thermal Cut-off
- Embedded technology to run cool with higher efficiency – 95% at full load
- Field-effect transistors – resulting in higher efficiency, smaller size and longer life than products with bipolar transistors

66961 –

Halogen Transformer

60W Class 2 Plug-In Electronic Transformer. 12V. Black.

General characteristics

Output Type	AC, Class 2 compliance
Input voltage (V)	120
Input frequency (Hz)	50-60
Power Factor Correction	0.96
Efficiency (%)	90
Output voltage (V)	11.5
Output Wattage Range (W)	20-60
Dimmability	-
Ambient Temperature (°C)	-10 to +50
Case Temperature (°C)	90

Dimensions

Wiring diagram – see example C on page 19-30

Casing length (in)	3.94
Casing width (in)	1.5
Casing height (in)	2.2
Mounting Dims (in)	-
Weight (lb)	0.53
Lead Exit Type	Plug-In
Input wire length (in)	-
Output wire length (in)	120

66962 –

Halogen Transformer

60W Class 2 Plug-In Electronic Transformer. 12V. White.

General characteristics

Output Type	AC, Class 2 compliance
Input voltage (V)	120
Input frequency (Hz)	50-60
Power Factor Correction	0.96
Efficiency (%)	90
Output voltage (V)	11.5
Output Wattage Range (W)	20-60
Dimmability	-
Ambient Temperature (°C)	-10 to +50
Case Temperature (°C)	90

Dimensions

Wiring diagram – see example C on page 19-30

Casing length (in)	3.94
Casing width (in)	1.5
Casing height (in)	2.2
Mounting Dims (in)	-
Weight (lb)	0.53
Lead Exit Type	Plug-In
Input wire length (in)	-
Output wire length (in)	120

66936 –

Halogen Transformer

60W Class 2 Electronic Transformer. 12V. Bottom Feed.

General characteristics

Output Type	AC, Class 2 compliance
Input voltage (V)	120
Input frequency (Hz)	50-60
Power Factor Correction	0.96
Efficiency (%)	95
Output voltage (V)	11.6
Output Wattage Range (W)	20-60
Dimmability	Trailing Edge
Ambient Temperature (°C)	-10 to +50
Case Temperature (°C)	90

Dimensions

Wiring diagram – see example A on page 19-30

Casing length (in)	2.36
Casing width (in)	1.32
Casing height (in)	0.87
Mounting Dims (in)	2.0
Weight (lb)	0.22
Lead Exit Type	Bottom
Input wire length (in)	6.7
Output wire length (in)	5.5

66937 –

Halogen Transformer

60W Class 2 Electronic Transformer. 12V.

General characteristics	
Output Type	AC, Class 2 compliance
Input voltage (V)	120
Input frequency (Hz)	50-60
Power Factor Correction	0.96
Efficiency (%)	94
Output voltage (V)	11.6
Output Wattage Range (W)	20-60
Dimmability	Trailing Edge
Ambient Temperature (°C)	0 to +50
Case Temperature (°C)	90

Dimensions	
Wiring diagram – see example A on page 19-30	
Casing length (in)	2.09
Casing width (in)	1.30
Casing height (in)	0.79
Mounting Dims (in)	-
Weight (lb)	0.22
Lead Exit Type	Side
Input wire length (in)	7.9
Output wire length (in)	5.5

66938 –

Halogen Transformer

60W Class 2 Electronic Transformer. 11.7V. 2.5W minimum load.

General characteristics	
Output Type	AC, Class 2 compliance
Input voltage (V)	120
Input frequency (Hz)	50-60
Power Factor Correction	0.96
Efficiency (%)	94
Output voltage (V)	11.6
Output Wattage Range (W)	2.5-60
Dimmability	Trailing Edge
Ambient Temperature (°C)	0 to +50
Case Temperature (°C)	90

Dimensions	
Wiring diagram – see example A on page 19-30	
Casing length (in)	2.09
Casing width (in)	1.3
Casing height (in)	0.79
Mounting Dims (in)	-
Weight (lb)	0.22
Lead Exit Type	Side
Input wire length (in)	7.9
Output wire length (in)	5.5

66939 –

Halogen Transformer

60W Class 2 Electronic Transformer. 12V. Dimming Loop.

General characteristics	
Output Type	AC, Class 2 compliance
Input voltage (V)	120
Input frequency (Hz)	60
Power Factor Correction	0.96
Efficiency (%)	94
Output voltage (V)	11.6
Output Wattage Range (W)	20-60
Dimmability	0-10V
Ambient Temperature (°C)	0 to +50
Case Temperature (°C)	90

Dimensions	
Wiring diagram – see example D on page 19-30	
Casing length (in)	2.09
Casing width (in)	1.3
Casing height (in)	0.79
Mounting Dims (in)	-
Weight (lb)	0.22
Lead Exit Type	Side
Input wire length (in)	8.7
Output wire length (in)	5.5

66940 –

Halogen Transformer

60W Class 2 Electronic Transformer. 12V. Potentiometer on Dimming Loop.

General characteristics	
Output Type	AC, Class 2 compliance
Input voltage (V)	120
Input frequency (Hz)	60
Power Factor Correction	0.96
Efficiency (%)	94
Output voltage (V)	11.6
Output Wattage Range (W)	20-60
Dimmability	0-10V
Ambient Temperature (°C)	0 to +50
Case Temperature (°C)	90

Dimensions	
Wiring diagram – see example D on page 19-30	
Casing length (in)	2.09
Casing width (in)	1.3
Casing height (in)	0.79
Mounting Dims (in)	-
Weight (lb)	0.22
Lead Exit Type	Side
Input wire length (in)	8.7
Output wire length (in)	5.5

66943 –

Halogen Transformer

60W Class 2 Electronic Transformer. 12V. Ground Wire. Double-Sided Tape.

General characteristics	
Output Type	AC, Class 2 compliance
Input voltage (V)	120
Input frequency (Hz)	60
Power Factor Correction	0.96
Efficiency (%)	94
Output voltage (V)	11.6
Output Wattage Range (W)	20-60
Dimmability	Trailing Edge
Ambient Temperature (°C)	0 to +50
Case Temperature (°C)	90

Dimensions	
Wiring diagram – see example E on page 19-30	
Casing length (in)	2.09
Casing width (in)	1.30
Casing height (in)	0.79
Mounting Dims (in)	-
Weight (lb)	0.22
Lead Exit Type	Side
Input wire length (in)	7.9
Output wire length (in)	5.5

66963 –

Halogen Transformer

60W Class 2 Electronic Transformer. 12V. In Secondary Housing.

General characteristics	
Output Type	AC, Class 2 compliance
Input voltage (V)	120
Input frequency (Hz)	50-60
Power Factor Correction	0.96
Efficiency (%)	94
Output voltage (V)	11.6
Output Wattage Range (W)	20-60
Dimmability	Trailing Edge
Ambient Temperature (°C)	0 to +50
Case Temperature (°C)	90

Dimensions	
Wiring diagram – see example A on page 19-30	
Casing length (in)	6.5
Casing width (in)	1.7
Casing height (in)	1.42
Mounting Dims (in)	-
Weight (lb)	0.75
Lead Exit Type	Side
Input wire length (in)	-
Output wire length (in)	-

66945 –

Halogen Transformer

75W Electronic Transformer. 12V.

General characteristics	
Output Type	AC
Input voltage (V)	120
Input frequency (Hz)	50-60
Power Factor Correction	0.95
Efficiency (%)	95
Output voltage (V)	11.6
Output Wattage Range (W)	20-75
Dimmability	Trailing Edge
Ambient Temperature (°C)	-10 to +50
Case Temperature (°C)	90

Dimensions	
Wiring diagram – see example A on page 19-30	
Casing length (in)	2.1
Casing width (in)	1.3
Casing height (in)	0.79
Mounting Dims (in)	-
Weight (lb)	0.22
Lead Exit Type	Side
Input wire length (in)	7.9
Output wire length (in)	5.5

66967 –

Halogen Transformer

75W Electronic Transformer. Mounting Tab.

General characteristics	
Output Type	AC
Input voltage (V)	120
Input frequency (Hz)	50-60
Power Factor Correction	0.95
Efficiency (%)	95
Output voltage (V)	11.6
Output Wattage Range (W)	20-75
Dimmability	Trailing Edge
Ambient Temperature (°C)	-10 to +50
Case Temperature (°C)	90

Dimensions	
Wiring diagram – see example A on page 19-30	
Casing length (in)	2.4
Casing width (in)	1.3
Casing height (in)	0.79
Mounting Dims (in)	-
Weight (lb)	0.22
Lead Exit Type	Side
Input wire length (in)	7.9
Output wire length (in)	5.9

66946 –

Halogen Transformer

75W Electronic Transformer. 12V. Bottom Feed.

General characteristics	
Output Type	AC
Input voltage (V)	120
Input frequency (Hz)	50-60
Power Factor Correction	0.95
Efficiency (%)	95
Output voltage (V)	11.6
Output Wattage Range (W)	20-75
Dimmability	Trailing Edge
Ambient Temperature (°C)	-10 to +50
Case Temperature (°C)	90

Dimensions	
Wiring diagram – see example A on page 19-30	
Casing length (in)	2.36
Casing width (in)	1.32
Casing height (in)	0.87
Mounting Dims (in)	2.0
Weight (lb)	0.22
Lead Exit Type	Bottom
Input wire length (in)	7.3
Output wire length (in)	5.5

66947 –

Halogen Transformer

75W Electronic Transformer. 12V. Ground Wire.

General characteristics

Output Type	AC
Input voltage (V)	120
Input frequency (Hz)	50-60
Power Factor Correction	0.95
Efficiency (%)	95
Output voltage (V)	11.6
Output Wattage Range (W)	20-75
Dimmability	Trailing Edge
Ambient Temperature (°C)	-10 to +50
Case Temperature (°C)	90

Dimensions

Wiring diagram – see example E on page 19-30

Casing length (in)	2.1
Casing width (in)	1.3
Casing height (in)	0.79
Mounting Dims (in)	-
Weight (lb)	0.22
Lead Exit Type	Side
Input wire length (in)	7.9
Output wire length (in)	5.5

66948 –

Halogen Transformer

75W Electronic Transformer. 12V. Double-Sided Tape.

General characteristics

Output Type	AC
Input voltage (V)	120
Input frequency (Hz)	50-60
Power Factor Correction	0.95
Efficiency (%)	95
Output voltage (V)	11.6
Output Wattage Range (W)	20-75
Dimmability	Trailing Edge
Ambient Temperature (°C)	-10 to +50
Case Temperature (°C)	90

Dimensions

Wiring diagram – see example A on page 19-30

Casing length (in)	2.1
Casing width (in)	1.3
Casing height (in)	0.79
Mounting Dims (in)	-
Weight (lb)	0.22
Lead Exit Type	Side
Input wire length (in)	7.9
Output wire length (in)	5.5

66951 –

Halogen Transformer

75W Electronic Transformer. 24V.

General characteristics

Output Type	AC
Input voltage (V)	120
Input frequency (Hz)	50-60
Power Factor Correction	0.95
Efficiency (%)	95
Output voltage (V)	23.2
Output Wattage Range (W)	20-75
Dimmability	Trailing Edge
Ambient Temperature (°C)	-10 to +50
Case Temperature (°C)	90

Dimensions

Wiring diagram – see example F on page 19-30

Casing length (in)	2.1
Casing width (in)	1.3
Casing height (in)	0.79
Mounting Dims (in)	-
Weight (lb)	0.22
Lead Exit Type	Side
Input wire length (in)	6.0
Output wire length (in)	6.0

66952 –

Halogen Transformer

75W Electronic Transformer. 12V. Increased EMI Filtering.

General characteristics	
Output Type	AC
Input voltage (V)	120
Input frequency (Hz)	50-60
Power Factor Correction	0.95
Efficiency (%)	94
Output voltage (V)	11.6
Output Wattage Range (W)	10-75
Dimmability	Trailing Edge
Ambient Temperature (°C)	-10 to +50
Case Temperature (°C)	90

Dimensions	
Wiring diagram – see example A on page 19-30	
Casing length (in)	2.52
Casing width (in)	1.34
Casing height (in)	0.83
Mounting Dims (in)	-
Weight (lb)	0.22
Lead Exit Type	Side
Input wire length (in)	8.7
Output wire length (in)	8.7

66953 –

Halogen Transformer

75W Electronic Transformer. 12V. Increased EMI Filtering. Bottom Feed.

General characteristics	
Output Type	AC
Input voltage (V)	120
Input frequency (Hz)	50-60
Power Factor Correction	0.95
Efficiency (%)	94
Output voltage (V)	11.6
Output Wattage Range (W)	10-75
Dimmability	Trailing Edge
Ambient Temperature (°C)	-10 to +50
Case Temperature (°C)	90

Dimensions	
Wiring diagram – see example A on page 19-30	
Casing length (in)	3.48
Casing width (in)	1.44
Casing height (in)	1.15
Mounting Dims (in)	2.0
Weight (lb)	0.24
Lead Exit Type	Bottom
Input wire length (in)	6.3
Output wire length (in)	6.3

68662 –

Halogen Transformer

75W Electronic Transformer. 12V. Black.

General characteristics	
Output Type	AC
Input voltage (V)	240
Input frequency (Hz)	50-60
Power Factor Correction	0.95
Efficiency (%)	94
Output voltage (V)	11.7
Output Wattage Range (W)	20-75
Dimmability	Trailing Edge
Ambient Temperature (°C)	-10 to +50
Case Temperature (°C)	85

Dimensions	
Wiring diagram – see example G on page 19-30	
Casing length (in)	2.52
Casing width (in)	1.34
Casing height (in)	0.83
Mounting Dims (in)	-
Weight (lb)	0.22
Lead Exit Type	Side
Input wire length (in)	8.1
Output wire length (in)	7.7

66954 –

Halogen Transformer

75W Electronic Transformer. 12V. 277V Input.

General characteristics	
Output Type	AC
Input voltage (V)	277
Input frequency (Hz)	50-60
Power Factor Correction	0.95
Efficiency (%)	-
Output voltage (V)	11.5
Output Wattage Range (W)	35-75
Dimmability	Trailing Edge
Ambient Temperature (°C)	0 to +50
Case Temperature (°C)	90

Dimensions	
Wiring diagram – see example H on page 19-30	
Casing length (in)	2.52
Casing width (in)	1.34
Casing height (in)	0.83
Mounting Dims (in)	-
Weight (lb)	0.25
Lead Exit Type	Side
Input wire length (in)	7.1
Output wire length (in)	9.1

66955 –

Halogen Transformer

75W Electronic Transformer. 12V. 277V Input. Bottom Feed.

General characteristics	
Output Type	AC
Input voltage (V)	277
Input frequency (Hz)	50-60
Power Factor Correction	0.95
Efficiency (%)	-
Output voltage (V)	11.5
Output Wattage Range (W)	35-75
Dimmability	Trailing Edge
Ambient Temperature (°C)	0 to +50
Case Temperature (°C)	90

Dimensions	
Wiring diagram – see example H on page 19-30	
Casing length (in)	3.48
Casing width (in)	1.44
Casing height (in)	1.15
Mounting Dims (in)	2.0
Weight (lb)	0.26
Lead Exit Type	Bottom
Input wire length (in)	6.3
Output wire length (in)	6.3

66956 –

Halogen Transformer

105W Electronic Transformer. 12V.

General characteristics	
Output Type	AC
Input voltage (V)	120
Input frequency (Hz)	50-60
Power Factor Correction	0.95
Efficiency (%)	94
Output voltage (V)	11.5
Output Wattage Range (W)	20-100
Dimmability	Trailing Edge
Ambient Temperature (°C)	-10 to +50
Case Temperature (°C)	90

Dimensions	
Wiring diagram – see example A on page 19-30	
Casing length (in)	3.15
Casing width (in)	1.35
Casing height (in)	0.95
Mounting Dims (in)	-
Weight (lb)	0.27
Lead Exit Type	Side
Input wire length (in)	7.7
Output wire length (in)	7.3

68663 –

Halogen Transformer

105W Electronic Transformer. 12V. 240V Input.

General characteristics

Output Type	AC
Input voltage (V)	240
Input frequency (Hz)	50-60
Power Factor Correction	0.95
Efficiency (%)	94
Output voltage (V)	11.6
Output Wattage Range (W)	20-105
Dimmability	Trailing Edge
Ambient Temperature (°C)	-10 to +50
Case Temperature (°C)	85

Dimensions

Wiring diagram – see example G on page 19-30

Casing length (in)	3.15
Casing width (in)	1.25
Casing height (in)	1.04
Mounting Dims (in)	3.53
Weight (lb)	0.29
Lead Exit Type	Side
Input wire length (in)	6.7
Output wire length (in)	6.7

66957 –

Halogen Transformer

150W Electronic Transformer. 12V. Bottom Feed.

General characteristics

Output Type	AC
Input voltage (V)	120
Input frequency (Hz)	50-60
Power Factor Correction	0.98
Efficiency (%)	93
Output voltage (V)	11.6
Output Wattage Range (W)	50-150
Dimmability	Trailing Edge
Ambient Temperature (°C)	-10 to +50
Case Temperature (°C)	85

Dimensions

Wiring diagram – see example A on page 19-30

Casing length (in)	3.31
Casing width (in)	1.38
Casing height (in)	1.61
Mounting Dims (in)	4.13
Weight (lb)	0.42
Lead Exit Type	Bottom
Input wire length (in)	6.3
Output wire length (in)	6.3

66958 –

Halogen Transformer

150W Electronic Transformer. 12V.

General characteristics

Output Type	AC
Input voltage (V)	120
Input frequency (Hz)	50-60
Power Factor Correction	0.98
Efficiency (%)	93
Output voltage (V)	11.6
Output Wattage Range (W)	50-150
Dimmability	Trailing Edge
Ambient Temperature (°C)	-10 to +50
Case Temperature (°C)	85

Dimensions

Wiring diagram – see example A on page 19-30

Casing length (in)	3.44
Casing width (in)	1.38
Casing height (in)	1.22
Mounting Dims (in)	3.62
Weight (lb)	0.42
Lead Exit Type	Side
Input wire length (in)	7.1
Output wire length (in)	9.1

66970 –

Halogen Transformer

150W Electronic Transformer. 24V.

General characteristics	
Output Type	AC
Input voltage (V)	120
Input frequency (Hz)	50-60
Power Factor Correction	0.98
Efficiency (%)	93
Output voltage (V)	23
Output Wattage Range (W)	50-150
Dimmability	Trailing Edge
Ambient Temperature (°C)	-10 to +50
Case Temperature (°C)	85

Dimensions	
Wiring diagram – see example F on page 19-30	
Casing length (in)	3.44
Casing width (in)	1.38
Casing height (in)	1.22
Mounting Dims (in)	3.62
Weight (lb)	0.42
Lead Exit Type	Side
Input wire length (in)	7.1
Output wire length (in)	9.1

66969 –

Halogen Transformer

150W Electronic Transformer. 12V. In Secondary Housing.

General characteristics	
Output Type	AC
Input voltage (V)	120
Input frequency (Hz)	50-60
Power Factor Correction	0.98
Efficiency (%)	93
Output voltage (V)	11.5
Output Wattage Range (W)	50-150
Dimmability	Trailing Edge
Ambient Temperature (°C)	-10 to +50
Case Temperature (°C)	85

Dimensions	
Wiring diagram – see example A on page 19-30	
Casing length (in)	9.35
Casing width (in)	1.82
Casing height (in)	1.4
Mounting Dims (in)	-
Weight (lb)	0.95
Lead Exit Type	Side
Input wire length (in)	-
Output wire length (in)	-

66972 –

Halogen Transformer

150W Electronic Transformer. 24V. In Secondary housing.

General characteristics	
Output Type	AC
Input voltage (V)	120
Input frequency (Hz)	50-60
Power Factor Correction	0.98
Efficiency (%)	93
Output voltage (V)	23
Output Wattage Range (W)	50-150
Dimmability	Trailing Edge
Ambient Temperature (°C)	-10 to +40
Case Temperature (°C)	85

Dimensions	
Wiring diagram – see example F on page 19-30	
Casing length (in)	9.35
Casing width (in)	1.82
Casing height (in)	1.4
Mounting Dims (in)	-
Weight (lb)	0.95
Lead Exit Type	Side
Input wire length (in)	-
Output wire length (in)	-

68664 –

Halogen Transformer

150W Class 2 Electronic Transformer. 12V.

General characteristics

Output Type	AC
Input voltage (V)	240
Input frequency (Hz)	50-60
Power Factor Correction	0.95
Efficiency (%)	-
Output voltage (V)	11.5
Output Wattage Range (W)	50-150
Dimmability	Trailing Edge
Ambient Temperature (°C)	10 to +45
Case Temperature (°C)	85

Dimensions

Wiring diagram – see example G on page 19-30

Casing length (in)	4.25
Casing width (in)	1.26
Casing height (in)	1.14
Mounting Dims (in)	4.72
Weight (lb)	0.37
Lead Exit Type	Side
Input wire length (in)	7.3
Output wire length (in)	7.3

66960 –

Halogen Transformer

200W Electronic Transformer. 12V. Increased EMI Filtering.

General characteristics

Output Type	AC
Input voltage (V)	120
Input frequency (Hz)	50-60
Power Factor Correction	0.98
Efficiency (%)	94
Output voltage (V)	11.5
Output Wattage Range (W)	50-200
Dimmability	Trailing Edge
Ambient Temperature (°C)	0 to +50
Case Temperature (°C)	90

Dimensions

Wiring diagram – see example A on page 19-30

Casing length (in)	4.33
Casing width (in)	1.57
Casing height (in)	1.24
Mounting Dims (in)	4.61
Weight (lb)	0.66
Lead Exit Type	Side
Input wire length (in)	7.1
Output wire length (in)	9.0

66973 –

Halogen Transformer

300W Electronic Transformer. 12V. Round.

General characteristics

Output Type	AC
Input voltage (V)	120
Input frequency (Hz)	60
Power Factor Correction	0.99
Efficiency (%)	95.5
Output voltage (V)	11.8
Output Wattage Range (W)	50-300
Dimmability	Trailing Edge
Ambient Temperature (°C)	0 to +50
Case Temperature (°C)	90

Dimensions

Wiring diagram – see example A on page 19-30

Casing length (in)	3.62
Casing width (in)	-
Casing height (in)	1.26
Mounting Dims (in)	-
Weight (lb)	1.03
Lead Exit Type	Side
Input wire length (in)	6.5
Output wire length (in)	6.5

66975 –

Halogen Transformer

300W Electronic Transformer. 12V.

General characteristics	
Output Type	AC
Input voltage (V)	120
Input frequency (Hz)	60
Power Factor Correction	0.99
Efficiency (%)	95.5
Output voltage (V)	11.8
Output Wattage Range (W)	50-300
Dimmability	Trailing Edge
Ambient Temperature (°C)	0 to +50
Case Temperature (°C)	90

Dimensions	
Wiring diagram – see example A on page 19-30	
Casing length (in)	6.02
Casing width (in)	1.54
Casing height (in)	1.12
Mounting Dims (in)	5.51
Weight (lb)	0.74
Lead Exit Type	Side
Input wire length (in)	6.9
Output wire length (in)	6.9

66977 –

Halogen Transformer

300W Electronic Transformer. 24V.

General characteristics	
Output Type	AC
Input voltage (V)	120
Input frequency (Hz)	60
Power Factor Correction	0.99
Efficiency (%)	95.5
Output voltage (V)	24
Output Wattage Range (W)	50-300
Dimmability	Trailing Edge
Ambient Temperature (°C)	0 to +50
Case Temperature (°C)	90

Dimensions	
Wiring diagram – see example F on page 19-30	
Casing length (in)	6.02
Casing width (in)	1.54
Casing height (in)	1.12
Mounting Dims (in)	5.51
Weight (lb)	0.74
Lead Exit Type	Side
Input wire length (in)	6.9
Output wire length (in)	6.9

66979 –

Halogen Transformer

300W Electronic Transformer. 12V. In Secondary Housing.

General characteristics	
Output Type	AC
Input voltage (V)	120
Input frequency (Hz)	60
Power Factor Correction	0.99
Efficiency (%)	95.5
Output voltage (V)	11.8
Output Wattage Range (W)	50-300
Dimmability	Trailing Edge
Ambient Temperature (°C)	0 to +50
Case Temperature (°C)	90

Dimensions	
Wiring diagram – see example A on page 19-30	
Casing length (in)	9.35
Casing width (in)	1.82
Casing height (in)	1.4
Mounting Dims (in)	-
Weight (lb)	1.5
Lead Exit Type	Side
Input wire length (in)	-
Output wire length (in)	-

66980 –

Halogen Transformer

300W Electronic Transformer. 24V. In Secondary Housing.

General characteristics	
Output Type	AC
Input voltage (V)	120
Input frequency (Hz)	60
Power Factor Correction	0.99
Efficiency (%)	95.5
Output voltage (V)	24
Output Wattage Range (W)	50-300
Dimmability	Trailing Edge
Ambient Temperature (°C)	0 to +50
Case Temperature (°C)	90

Dimensions	
Wiring diagram – see example F on page 19-30	
Casing length (in)	9.35
Casing width (in)	1.82
Casing height (in)	1.4
Mounting Dims (in)	-
Weight (lb)	1.5
Lead Exit Type	Side
Input wire length (in)	-
Output wire length (in)	-

66978 –

Halogen Transformer

360W Class 2 Electronic Transformer. 12V. 6 x 60W.

General characteristics	
Output Type	AC, Class 2 compliance
Input voltage (V)	120
Input frequency (Hz)	50-60
Power Factor Correction	0.96
Efficiency (%)	95
Output voltage (V)	11.6
Output Wattage Range (W)	20-360
Dimmability	Trailing Edge
Ambient Temperature (°C)	-10 to +50
Case Temperature (°C)	90

Dimensions	
Wiring diagram – see example I on page 19-30	
Casing length (in)	8.27
Casing width (in)	4.72
Casing height (in)	1.71
Mounting Dims (in)	-
Weight (lb)	2.43
Lead Exit Type	Side
Input wire length (in)	-
Output wire length (in)	-

68665 –

Halogen Transformer

Line Filter. EMI Filter. In-line.

General characteristics	
Output Type	AC
Input voltage (V)	120
Input frequency (Hz)	50-60
Power Factor Correction	-
Efficiency (%)	-
Inductance (mH)	15
Output Wattage Range (W)	-
Dimmability	-
Ambient Temperature (°C)	-10 to +50
Case Temperature (°C)	90

Dimensions	
Wiring diagram – see example J on page 19-30	
Casing length (in)	1.3
Casing width (in)	1.18
Casing height (in)	0.74
Mounting Dims (in)	-
Weight (lb)	0.13
Lead Exit Type	Side
Input wire length (in)	2.2
Output wire length (in)	2.2

66866 –

Constant Current, Class 2 Compliance

6W LED Driver. 700mA. Non-Dimming.

General characteristics	
Input Voltage (V)	120-277
Input Frequency (Hz)	50-60
Efficiency (%)	70
Output Type	DC
Output Current (mA)	700
Output Voltage Range (V)	2.0-11.0
Output Wattage Range (W)	1.4-7.7
Dimmability	None
Ambient Temperature min (°C)	-25
Ambient Temperature max (°C)	50
Case Temperature (°C)	71

Dimensions	
Wiring diagram – see example K on page 19-30	
Casing length (in)	1.77
Casing width (in)	1.77
Casing height (in)	0.98
Mounting Dims (in)	2.05
Weight (lb)	0.25
Lead Exit Type	Side
Input wire length (in)	8.1
Output wire length (in)	8.1

66867 –

Constant Current, Class 2 Compliance

10W LED Driver. 350mA. Non-Dimming. Terminal Blocks.

General characteristics	
Input Voltage (V)	100-240
Input Frequency (Hz)	50-60
Efficiency (%)	78
Output Type	DC
Output Current (mA)	350
Output Voltage Range (V)	2.3-28.0
Output Wattage Range (W)	0.81-9.8
Dimmability	None
Ambient Temperature min (°C)	-25
Ambient Temperature max (°C)	50
Case Temperature (°C)	90

Dimensions	
Wiring diagram – see example B on page 19-30	
Casing length (in)	3.94
Casing width (in)	1.57
Casing height (in)	1.05
Mounting Dims (in)	3.54x1.18
Weight (lb)	0.21
Lead Exit Type	Terminals
Input wire length (in)	-
Output wire length (in)	-

66868 –

Constant Current, Class 2 Compliance

10W LED Driver. 700mA. Non-Dimming.

General characteristics	
Input Voltage (V)	100-240
Input Frequency (Hz)	50-60
Efficiency (%)	68
Output Type	DC
Output Current (mA)	700
Output Voltage Range (V)	2.3-15.0
Output Wattage Range (W)	1.61-10.5
Dimmability	None
Ambient Temperature min (°C)	-25
Ambient Temperature max (°C)	50
Case Temperature (°C)	90

Dimensions	
Wiring diagram – see example K on page 19-30	
Casing length (in)	3.82
Casing width (in)	1.57
Casing height (in)	0.91
Mounting Dims (in)	3.62x1.18
Weight (lb)	0.39
Lead Exit Type	Side
Input wire length (in)	19.1
Output wire length (in)	19.1

66863 –

Constant Current, Class 2 Compliance

1W LED Driver. 350mA. Non-Dimming.

General characteristics

Input Voltage (V)	100-240
Input Frequency (Hz)	50-60
Efficiency (%)	50
Output Type	DC
Output Current (mA)	350
Output Voltage Range (V)	2.0-6.0
Output Wattage Range (W)	0.7-2.1
Dimmability	None
Ambient Temperature min (°C)	-25
Ambient Temperature max (°C)	50
Case Temperature (°C)	90

Dimensions

Wiring diagram – see example K on page 19-30

Casing length (in)	1.34
Casing width (in)	1.26
Casing height (in)	0.98
Mounting Dims (in)	-
Weight (lb)	0.14
Lead Exit Type	Side
Input wire length (in)	7.7
Output wire length (in)	7.7

66864 –

Constant Current, Class 2 Compliance

6W LED Driver. 350mA. Non-Dimming.

General characteristics

Input Voltage (V)	120-277
Input Frequency (Hz)	50-60
Efficiency (%)	70
Output Type	DC
Output Current (mA)	350
Output Voltage Range (V)	2.0-20.0
Output Wattage Range (W)	0.7-7.0
Dimmability	None
Ambient Temperature min (°C)	-25
Ambient Temperature max (°C)	50
Case Temperature (°C)	71

Dimensions

Wiring diagram – see example K on page 19-30

Casing length (in)	1.77
Casing width (in)	1.77
Casing height (in)	0.98
Mounting Dims (in)	2.05
Weight (lb)	0.25
Lead Exit Type	Side
Input wire length (in)	8.1
Output wire length (in)	8.1

66865 –

Constant Current, Class 2 Compliance

6W LED Driver. 500mA. Non-Dimming.

General characteristics

Input Voltage (V)	120-277
Input Frequency (Hz)	50-60
Efficiency (%)	70
Output Type	DC
Output Current (mA)	500
Output Voltage Range (V)	2.0-14.0
Output Wattage Range (W)	1.0-7.0
Dimmability	None
Ambient Temperature min (°C)	-25
Ambient Temperature max (°C)	50
Case Temperature (°C)	71

Dimensions

Wiring diagram – see example K on page 19-30

Casing length (in)	1.77
Casing width (in)	1.77
Casing height (in)	0.98
Mounting Dims (in)	2.05
Weight (lb)	0.25
Lead Exit Type	Side
Input wire length (in)	8.1
Output wire length (in)	8.1

66870 –

Constant Current, Class 2 Compliance

10W LED Driver. 350mA. Non-Dimming. In Secondary Housing.

General characteristics	
Input Voltage (V)	120
Input Frequency (Hz)	50-60
Efficiency (%)	78
Output Type	DC
Output Current (mA)	350
Output Voltage Range (V)	2.3-28.0
Output Wattage Range (W)	0.81-9.8
Dimmability	None
Ambient Temperature min (°C)	-25
Ambient Temperature max (°C)	50
Case Temperature (°C)	90

Dimensions	
Wiring diagram – see example K on page 19-30	
Casing length (in)	6.48
Casing width (in)	1.68
Casing height (in)	1.41
Mounting Dims (in)	-
Weight (lb)	0.87
Lead Exit Type	Side
Input wire length (in)	-
Output wire length (in)	-

66880 –

Constant Current, Class 2 Compliance

10W LED Driver. 350mA. Non-Dimming. Plug-In. White.

General characteristics	
Input Voltage (V)	120
Input Frequency (Hz)	50-60
Efficiency (%)	78
Output Type	DC
Output Current (mA)	350
Output Voltage Range (V)	2.3-2.9
Output Wattage Range (W)	0.81-10.15
Dimmability	None
Ambient Temperature min (°C)	10
Ambient Temperature max (°C)	35
Case Temperature (°C)	90

Dimensions	
Wiring diagram – see example C on page 19-30	
Casing length (in)	3.15
Casing width (in)	1.50
Casing height (in)	0.95
Mounting Dims (in)	-
Weight (lb)	0.53
Lead Exit Type	Plug-in
Input wire length (in)	-
Output wire length (in)	120

66871 –

Constant Current, Class 2 Compliance

18W LED Driver. 350mA. TE Dimming.

General characteristics	
Input Voltage (V)	120-277
Input Frequency (Hz)	50-60
Efficiency (%)	85
Output Type	DC
Output Current (mA)	350
Output Voltage Range (V)	4.0-52.0
Output Wattage Range (W)	1.4-18.20
Dimmability	Trailing Edge
Ambient Temperature min (°C)	-25
Ambient Temperature max (°C)	50
Case Temperature (°C)	90

Dimensions	
Wiring diagram – see example K on page 19-30	
Casing length (in)	6.02
Casing width (in)	1.57
Casing height (in)	1.20
Mounting Dims (in)	5.51
Weight (lb)	0.74
Lead Exit Type	Side
Input wire length (in)	8.46
Output wire length (in)	8.46

66872 –

Constant Current, Class 2 Compliance

18W LED Driver. 350mA. TE Dimming. Bottom Feed.

General characteristics

Input Voltage (V)	120-277
Input Frequency (Hz)	50-60
Efficiency (%)	85
Output Type	DC
Output Current (mA)	350
Output Voltage Range (V)	4.0-52.0
Output Wattage Range (W)	1.4-18.2
Dimmability	Trailing Edge
Ambient Temperature min (°C)	-25
Ambient Temperature max (°C)	50
Case Temperature (°C)	90

Dimensions

Wiring diagram – see example K on page 19-30

Casing length (in)	5.33
Casing width (in)	1.67
Casing height (in)	1.32
Mounting Dims (in)	2.0
Weight (lb)	0.75
Lead Exit Type	Bottom
Input wire length (in)	6.0
Output wire length (in)	6.0

66883 –

Constant Current, Class 2 Compliance

18W LED Driver. 700mA. TE Dimming. Bottom Feed.

General characteristics

Input Voltage (V)	120-277
Input Frequency (Hz)	50-60
Efficiency (%)	83
Output Type	DC
Output Current (mA)	700
Output Voltage Range (V)	4.0-26.0
Output Wattage Range (W)	2.8-18.2
Dimmability	Trailing Edge
Ambient Temperature min (°C)	-25
Ambient Temperature max (°C)	50
Case Temperature (°C)	90

Dimensions

Wiring diagram – see example K on page 19-30

Casing length (in)	5.33
Casing width (in)	1.67
Casing height (in)	1.32
Mounting Dims (in)	2.0
Weight (lb)	0.75
Lead Exit Type	Bottom
Input wire length (in)	6.0
Output wire length (in)	6.0

66884 –

Constant Current, Class 2 Compliance

18W LED Driver. 700mA. TE Dimming.

General characteristics

Input Voltage (V)	120-277
Input Frequency (Hz)	50-60
Efficiency (%)	83
Output Type	DC
Output Current (mA)	700
Output Voltage Range (V)	4.0-26.0
Output Wattage Range (W)	2.8-18.2
Dimmability	Trailing Edge
Ambient Temperature min (°C)	-25
Ambient Temperature max (°C)	50
Case Temperature (°C)	90

Dimensions

Wiring diagram – see example K on page 19-30

Casing length (in)	6.02
Casing width (in)	1.57
Casing height (in)	1.20
Mounting Dims (in)	5.51
Weight (lb)	0.74
Lead Exit Type	Side
Input wire length (in)	8.46
Output wire length (in)	8.46

66902 –

Constant Current, Class 2 Compliance

26W LED Driver. 500mA. TE Dimming.

General characteristics	
Input Voltage (V)	120-277
Input Frequency (Hz)	50-60
Efficiency (%)	86
Output Type	DC
Output Current (mA)	500
Output Voltage Range (V)	4.0-52.0
Output Wattage Range (W)	2.0-26.0
Dimmability	Trailing Edge
Ambient Temperature min (°C)	-25
Ambient Temperature max (°C)	50
Case Temperature (°C)	90

Dimensions	
Wiring diagram – see example K on page 19-30	
Casing length (in)	6.02
Casing width (in)	1.57
Casing height (in)	1.20
Mounting Dims (in)	5.51
Weight (lb)	0.74
Lead Exit Type	Side
Input wire length (in)	8.46
Output wire length (in)	8.46

66903 –

Constant Current, Class 2 Compliance

26W LED Driver. 500mA. TE Dimming. Bottom Feed.

General characteristics	
Input Voltage (V)	120-277
Input Frequency (Hz)	50-60
Efficiency (%)	86
Output Type	DC
Output Current (mA)	500
Output Voltage Range (V)	4.0-52.0
Output Wattage Range (W)	2.0-26.0
Dimmability	Trailing Edge
Ambient Temperature min (°C)	-25
Ambient Temperature max (°C)	50
Case Temperature (°C)	90

Dimensions	
Wiring diagram – see example K on page 19-30	
Casing length (in)	5.33
Casing width (in)	1.67
Casing height (in)	1.32
Mounting Dims (in)	2.0
Weight (lb)	0.75
Lead Exit Type	Bottom
Input wire length (in)	6.0
Output wire length (in)	6.0

66904 –

Constant Current, Class 2 Compliance

36W LED Driver. 700mA. TE Dimming.

General characteristics	
Input Voltage (V)	120-277
Input Frequency (Hz)	50-60
Efficiency (%)	88
Output Type	DC
Output Current (mA)	700
Output Voltage Range (V)	4.0-52.0
Output Wattage Range (W)	2.8-36.4
Dimmability	Trailing Edge
Ambient Temperature min (°C)	-25
Ambient Temperature max (°C)	50
Case Temperature (°C)	90

Dimensions	
Wiring diagram – see example K on page 19-30	
Casing length (in)	6.02
Casing width (in)	1.57
Casing height (in)	1.20
Mounting Dims (in)	5.51
Weight (lb)	0.74
Lead Exit Type	Side
Input wire length (in)	8.46
Output wire length (in)	8.46

66905 –

Constant Current, Class 2 Compliance

36W LED Driver. 700mA. TE Dimming. Bottom Feed.

General characteristics	
Input Voltage (V)	120-277
Input Frequency (Hz)	50-60
Efficiency (%)	88
Output Type	DC
Output Current (mA)	700
Output Voltage Range (V)	4.0-52.0
Output Wattage Range (W)	2.8-36.4
Dimmability	Trailing Edge
Ambient Temperature min (°C)	-25
Ambient Temperature max (°C)	50
Case Temperature (°C)	90

Dimensions	
Wiring diagram – see example K on page 19-30	
Casing length (in)	5.33
Casing width (in)	1.67
Casing height (in)	1.32
Mounting Dims (in)	2.0
Weight (lb)	0.75
Lead Exit Type	Bottom
Input wire length (in)	6.0
Output wire length (in)	6.0

66885 –

Constant Current, Class 2 Compliance

18W LED Driver. 350mA. LE/TE Dimming.

General characteristics	
Input Voltage (V)	120
Input Frequency (Hz)	60
Efficiency (%)	76
Output Type	DC
Output Current (mA)	350
Output Voltage Range (V)	5.6-42.0
Output Wattage Range (W)	1.96-14.7
Dimmability	Leading/Trailing Edge
Ambient Temperature min (°C)	-25
Ambient Temperature max (°C)	50
Case Temperature (°C)	80

Dimensions	
Wiring diagram – see example K on page 19-30	
Casing length (in)	7.80
Casing width (in)	1.73
Casing height (in)	1.18
Mounting Dims (in)	7.48x1.34
Weight (lb)	0.75
Lead Exit Type	Side
Input wire length (in)	6.3
Output wire length (in)	10.6

66886 –

Constant Current, Class 2 Compliance

18W LED Driver. 350mA. LE/TE Dimming. Bottom Feed.

General characteristics	
Input Voltage (V)	120
Input Frequency (Hz)	60
Efficiency (%)	76
Output Type	DC
Output Current (mA)	350
Output Voltage Range (V)	5.6-42.0
Output Wattage Range (W)	1.96-14.7
Dimmability	Leading/Trailing Edge
Ambient Temperature min (°C)	-25
Ambient Temperature max (°C)	50
Case Temperature (°C)	80

Dimensions	
Wiring diagram – see example K on page 19-30	
Casing length (in)	7.40
Casing width (in)	1.73
Casing height (in)	1.22
Mounting Dims (in)	2.0
Weight (lb)	0.75
Lead Exit Type	Bottom
Input wire length (in)	7.1
Output wire length (in)	7.1

66887 –

Constant Current, Class 2 Compliance

26W LED Driver. 500mA. LE/TE Dimming.

General characteristics

Input Voltage (V)	120
Input Frequency (Hz)	60
Efficiency (%)	76
Output Type	DC
Output Current (mA)	500
Output Voltage Range (V)	5.6-42.0
Output Wattage Range (W)	2.8-21.0
Dimmability	Leading/Trailing Edge
Ambient Temperature min (°C)	-25
Ambient Temperature max (°C)	50
Case Temperature (°C)	80

Dimensions

Wiring diagram – see example K on page 19-30

Casing length (in)	7.80
Casing width (in)	1.73
Casing height (in)	1.18
Mounting Dims (in)	7.48x1.34
Weight (lb)	0.75
Lead Exit Type	Side
Input wire length (in)	6.3
Output wire length (in)	10.6

66898 –

Constant Current, Class 2 Compliance

36W LED Driver. 700mA. LE/TE Dimming.

General characteristics

Input Voltage (V)	120
Input Frequency (Hz)	60
Efficiency (%)	76
Output Type	DC
Output Current (mA)	700
Output Voltage Range (V)	5.6-42.0
Output Wattage Range (W)	3.92-29.4
Dimmability	Leading/Trailing Edge
Ambient Temperature min (°C)	-25
Ambient Temperature max (°C)	50
Case Temperature (°C)	80

Dimensions

Wiring diagram – see example K on page 19-30

Casing length (in)	7.80
Casing width (in)	1.73
Casing height (in)	1.18
Mounting Dims (in)	7.48x1.34
Weight (lb)	0.75
Lead Exit Type	Side
Input wire length (in)	6.3
Output wire length (in)	10.6

66899 –

Constant Current, Class 2 Compliance

36W LED Driver. 700mA. LE/TE Dimming. Bottom Feed.

General characteristics

Input Voltage (V)	120
Input Frequency (Hz)	60
Efficiency (%)	76
Output Type	DC
Output Current (mA)	700
Output Voltage Range (V)	5.6-42.0
Output Wattage Range (W)	3.92-29.4
Dimmability	Leading/Trailing Edge
Ambient Temperature min (°C)	-25
Ambient Temperature max (°C)	50
Case Temperature (°C)	80

Dimensions

Wiring diagram – see example K on page 19-30

Casing length (in)	7.40
Casing width (in)	1.73
Casing height (in)	1.22
Mounting Dims (in)	2.0
Weight (lb)	0.75
Lead Exit Type	Bottom
Input wire length (in)	7.1
Output wire length (in)	7.1

93861 –

Constant Current, Class 2 Compliance

30W LED Selectable Driver. 700/1400 mA. 0-10V. Bottom Feed.

General characteristics	
Input Voltage (V)	120-277
Input Frequency (Hz)	50-60
Efficiency (%)	>85
Output Type	DC
Output Current (mA)	700 and 1400
Output Voltage Range (V)	3-43
Output Wattage Range (W)	30
Dimmability	0-10V
Ambient Temperature min (°C)	-20
Ambient Temperature max (°C)	50
Case Temperature (°C)	75

Dimensions	
Wiring diagram – see example D on page 19-30	
Casing length (in)	3.74
Casing width (in)	1.75
Casing height (in)	1.18
Mounting Dims (in)	
Weight (lb)	0.65
Lead Exit Type	Bottom
Input wire length (in)	8.65
Output wire length (in)	8.65

93862 –

Constant Current, Class 2 Compliance

30W LED Selectable Driver. 700/1400 mA. 0-10V.

General characteristics	
Input Voltage (V)	120-277
Input Frequency (Hz)	50-60
Efficiency (%)	>85
Output Type	DC
Output Current (mA)	700 and 1400
Output Voltage Range (V)	3-43
Output Wattage Range (W)	30
Dimmability	0-10
Ambient Temperature min (°C)	-20
Ambient Temperature max (°C)	50
Case Temperature (°C)	75

Dimensions	
Wiring diagram – see example D on page 19-30	
Casing length (in)	3.74
Casing width (in)	1.75
Casing height (in)	1.18
Mounting Dims (in)	
Weight (lb)	0.65
Lead Exit Type	Side
Input wire length (in)	8.65
Output wire length (in)	8.65

66908 –

Constant Voltage, Class 2 Compliance

10W LED Driver. 12V. Non-Dimming. Terminal Blocks.

General characteristics	
Input voltage	120-240
Input frequency	50-60
Efficiency (%)	79
Output Type	DC
Output current (mA)	830
Output current range (mA)	10-830
Output voltage (V)	12
Output Wattage Range (W)	1.0-11.0
Ambient Temperature min (°C)	-25
Ambient Temperature max (°C)	50
Case Temperature (°C)	90

Dimensions	
Wiring diagram – see example B on page 19-30	
Casing length (in)	3.94
Casing width (in)	1.57
Casing height (in)	1.05
Mounting Dims (in)	3.54x1.18
Weight (lb)	0.21
Lead Exit Type	Terminals
Input wire length (in)	-
Output wire length (in)	-

66910 –

Constant Voltage, Class 2 Compliance

10W LED Driver. 24V. Non-Dimming. Terminal Blocks.

General characteristics	
Input voltage	120-240
Input frequency	50-60
Efficiency (%)	80
Output Type	DC
Output current (mA)	410
Output current range (mA)	10-410
Output voltage (V)	24
Output Wattage Range (W)	1.0-10.8
Ambient Temperature min (°C)	-25
Ambient Temperature max (°C)	50
Case Temperature (°C)	90

Dimensions	
Wiring diagram – see example B on page 19-30	
Casing length (in)	3.94
Casing width (in)	1.57
Casing height (in)	1.05
Mounting Dims (in)	3.54x1.18
Weight (lb)	0.21
Lead Exit Type	Terminals
Input wire length (in)	-
Output wire length (in)	-

66912 –

Constant Voltage, Class 2 Compliance

10W LED Driver. 24V. Non-Dimming. Plug-In.

General characteristics

Input voltage	120
Input frequency	50-60
Efficiency (%)	80
Output Type	DC
Output current (mA)	410
Output current range (mA)	10-410
Output voltage (V)	24
Output Wattage Range (W)	1.0-10.8
Ambient Temperature min (°C)	-25
Ambient Temperature max (°C)	50
Case Temperature (°C)	-

Dimensions

Wiring diagram – see example C on page 19-30

Casing length (in)	3.15
Casing width (in)	1.50
Casing height (in)	0.95
Mounting Dims (in)	-
Weight (lb)	0.53
Lead Exit Type	Plug-In
Input wire length (in)	-
Output wire length (in)	120

66913 –

Constant Voltage, Class 2 Compliance

25W LED Driver. 12V. Non-Dimming. Terminal Blocks.

General characteristics

Input voltage	120-277
Input frequency	50-60
Efficiency (%)	82
Output Type	DC
Output current (mA)	2000
Output current range (mA)	10-2000
Output voltage (V)	12
Output Wattage Range (W)	1.0-28.0
Ambient Temperature min (°C)	-25
Ambient Temperature max (°C)	50
Case Temperature (°C)	90

Dimensions

Wiring diagram – see example B on page 19-30

Casing length (in)	6.22
Casing width (in)	1.77
Casing height (in)	1.26
Mounting Dims (in)	5.35
Weight (lb)	0.59
Lead Exit Type	Terminals
Input wire length (in)	-
Output wire length (in)	-

66914 –

Constant Voltage, Class 2 Compliance

25W LED Driver. 12V. Non-Dimming.

General characteristics

Input voltage	120-277
Input frequency	50-60
Efficiency (%)	82
Output Type	DC
Output current (mA)	2000
Output current range (mA)	100-2000
Output voltage (V)	12
Output Wattage Range (W)	1.0-28.0
Ambient Temperature min (°C)	-25
Ambient Temperature max (°C)	50
Case Temperature (°C)	90

Dimensions

Wiring diagram – see example K on page 19-30

Casing length (in)	6.02
Casing width (in)	1.57
Casing height (in)	1.20
Mounting Dims (in)	5.51
Weight (lb)	0.64
Lead Exit Type	Side
Input wire length (in)	9.8
Output wire length (in)	9.8

66915 –

Constant Voltage, Class 2 Compliance

25W LED Driver. 12V. Non-Dimming. Signage.

General characteristics

Input voltage	120-277
Input frequency	50-60
Efficiency (%)	82
Output Type	DC
Output current (mA)	2000
Output current range (mA)	100-2000
Output voltage (V)	12
Output Wattage Range (W)	1.0-28.0
Ambient Temperature min (°C)	-25
Ambient Temperature max (°C)	50
Case Temperature (°C)	90

Dimensions

Wiring diagram – see example K on page 19-30

Casing length (in)	6.02
Casing width (in)	1.57
Casing height (in)	1.20
Mounting Dims (in)	5.51
Weight (lb)	0.64
Lead Exit Type	Side
Input wire length (in)	9.8
Output wire length (in)	9.8

66919 –

Constant Voltage, Class 2 Compliance

25W LED Driver. 24V. Non-Dimming. Terminal Blocks.

General characteristics	
Input voltage	120-277
Input frequency	50-60
Efficiency (%)	84
Output Type	DC
Output current (mA)	1000
Output current range (mA)	-
Output voltage (V)	24
Output Wattage Range (W)	0-24.6
Ambient Temperature min (°C)	-25
Ambient Temperature max (°C)	50
Case Temperature (°C)	90

Dimensions	
Wiring diagram – see example B on page 19-30	
Casing length (in)	6.22
Casing width (in)	1.77
Casing height (in)	1.26
Mounting Dims (in)	5.35
Weight (lb)	0.59
Lead Exit Type	Terminals
Input wire length (in)	-
Output wire length (in)	-

66921 –

Constant Voltage, Class 2 Compliance

25W LED Driver. 24V. Non-Dimming.

General characteristics	
Input voltage	120-277
Input frequency	50-60
Efficiency (%)	84
Output Type	DC
Output current (mA)	1000
Output current range (mA)	-
Output voltage (V)	24
Output Wattage Range (W)	0-24.6
Ambient Temperature min (°C)	-25
Ambient Temperature max (°C)	50
Case Temperature (°C)	90

Dimensions	
Wiring diagram – see example K on page 19-30	
Casing length (in)	6.02
Casing width (in)	1.57
Casing height (in)	1.20
Mounting Dims (in)	5.51
Weight (lb)	0.64
Lead Exit Type	Side
Input wire length (in)	18.5
Output wire length (in)	18.5

66922 –

Constant Voltage, Class 2 Compliance

25W LED Driver. 24V. Non-Dimming. Signage.

General characteristics	
Input voltage	120-277
Input frequency	50-60
Efficiency (%)	84
Output Type	DC
Output current (mA)	1000
Output current range (mA)	-
Output voltage (V)	24
Output Wattage Range (W)	0-24.6
Ambient Temperature min (°C)	-25
Ambient Temperature max (°C)	50
Case Temperature (°C)	90

Dimensions	
Wiring diagram – see example K on page 19-30	
Casing length (in)	6.02
Casing width (in)	1.57
Casing height (in)	1.20
Mounting Dims (in)	5.51
Weight (lb)	0.64
Lead Exit Type	Side
Input wire length (in)	18.5
Output wire length (in)	18.5

66923 –

Constant Voltage, Class 2 Compliance

60W LED Driver. 12V. Non-Dimming.

General characteristics	
Input voltage	120-277
Input frequency	50-60
Efficiency (%)	85
Output Type	DC
Output current (mA)	5000
Output current range (mA)	-
Output voltage (V)	12.3
Output Wattage Range (W)	0-67.5
Ambient Temperature min (°C)	-25
Ambient Temperature max (°C)	38
Case Temperature (°C)	90

Dimensions	
Wiring diagram – see example K on page 19-30	
Casing length (in)	7.80
Casing width (in)	1.73
Casing height (in)	1.57
Mounting Dims (in)	7.48 x 1.34
Weight (lb)	1.29
Lead Exit Type	Side
Input wire length (in)	8.5
Output wire length (in)	8.5

66925 –

Constant Voltage, Class 2 Compliance

60W LED Driver. 12V. Non-Dimming. Signage.

General characteristics	
Input voltage	120-277
Input frequency	50-60
Efficiency (%)	85
Output Type	DC
Output current (mA)	5000
Output current range (mA)	-
Output voltage (V)	12.3
Output Wattage Range (W)	0-67.5
Ambient Temperature min (°C)	-25
Ambient Temperature max (°C)	38
Case Temperature (°C)	90

Dimensions	
Wiring diagram – see example K on page 19-30	
Casing length (in)	7.80
Casing width (in)	1.73
Casing height (in)	1.57
Mounting Dims (in)	7.48 x 1.34
Weight (lb)	1.29
Lead Exit Type	Side
Input wire length (in)	8.5
Output wire length (in)	8.5

68660 –

Constant Voltage, Class 2 Compliance

60W LED Driver. 12V. Non-Dimming. White.

General characteristics	
Input voltage	120-277
Input frequency	50-60
Efficiency (%)	85
Output Type	DC
Output current (mA)	5000
Output current range (mA)	-
Output voltage (V)	12.3
Output Wattage Range (W)	0-67.5
Ambient Temperature min (°C)	-25
Ambient Temperature max (°C)	38
Case Temperature (°C)	90

Dimensions	
Wiring diagram – see example K on page 19-30	
Casing length (in)	7.80
Casing width (in)	1.73
Casing height (in)	1.57
Mounting Dims (in)	7.48 x 1.34
Weight (lb)	1.29
Lead Exit Type	Side
Input wire length (in)	8.5
Output wire length (in)	8.5

66926 –

Constant Voltage, Class 2 Compliance

60W LED Driver. 24V. Non-Dimming.

General characteristics	
Input voltage	120-277
Input frequency	50-60
Efficiency (%)	87
Output Type	DC
Output current (mA)	2500
Output current range (mA)	-
Output voltage (V)	24.5
Output Wattage Range (W)	0-66.0
Ambient Temperature min (°C)	-25
Ambient Temperature max (°C)	50
Case Temperature (°C)	90

Dimensions	
Wiring diagram – see example K on page 19-30	
Casing length (in)	7.80
Casing width (in)	1.73
Casing height (in)	1.57
Mounting Dims (in)	7.48 x 1.34
Weight (lb)	1.29
Lead Exit Type	Side
Input wire length (in)	8.5
Output wire length (in)	8.5

66927 –

Constant Voltage, Class 2 Compliance

60W LED Driver. 24V. Non-Dimming. White.

General characteristics	
Input voltage	120-277
Input frequency	50-60
Efficiency (%)	87
Output Type	DC
Output current (mA)	2500
Output current range (mA)	-
Output voltage (V)	24.5
Output Wattage Range (W)	0-66.0
Ambient Temperature min (°C)	-25
Ambient Temperature max (°C)	50
Case Temperature (°C)	90

Dimensions	
Wiring diagram – see example K on page 19-30	
Casing length (in)	7.80
Casing width (in)	1.73
Casing height (in)	1.57
Mounting Dims (in)	7.48 x 1.34
Weight (lb)	1.29
Lead Exit Type	Side
Input wire length (in)	8.5
Output wire length (in)	8.5

66930 –

Constant Voltage, Class 2 Compliance

100W CV LED Driver. 12V. Potted. Non-Dimming.

General characteristics	
Input voltage	120-277
Input frequency	50-60
Efficiency (%)	81
Output Type	DC
Output current (mA)	8300
Output current range (mA)	-
Output voltage (V)	12.3
Output Wattage Range (W)	0-112.0
Ambient Temperature min (°C)	-30
Ambient Temperature max (°C)	50
Case Temperature (°C)	90

Dimensions	
Wiring diagram – see example K on page 19-30	
Casing length (in)	9.05
Casing width (in)	2.60
Casing height (in)	1.65
Mounting Dims (in)	8.66 x 0.95
Weight (lb)	2.27
Lead Exit Type	Side
Input wire length (in)	18.7
Output wire length (in)	18.7

66931 –

Constant Voltage, Class 2 Compliance

100W CV LED Driver. 24V. Potted. Non-Dimming.

General characteristics	
Input voltage	120-277
Input frequency	50-60
Efficiency (%)	83
Output Type	DC
Output current (mA)	4200
Output current range (mA)	42-4200
Output voltage (V)	24.6
Output Wattage Range (W)	0-111.0
Ambient Temperature min (°C)	-30
Ambient Temperature max (°C)	50
Case Temperature (°C)	90

Dimensions	
Wiring diagram – see example K on page 19-30	
Casing length (in)	9.05
Casing width (in)	2.60
Casing height (in)	1.65
Mounting Dims (in)	8.66x0.95
Weight (lb)	2.27
Lead Exit Type	Side
Input wire length (in)	18.7
Output wire length (in)	18.7

Wiring Diagrams
LED Drivers and Halogen Transformers

A

B

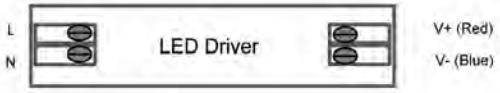

C

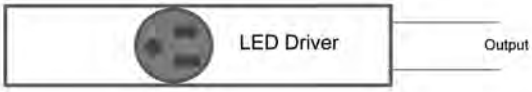

D

E

F

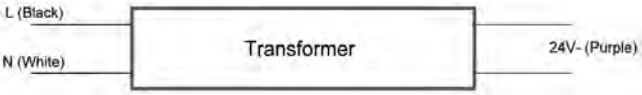

G

H

I

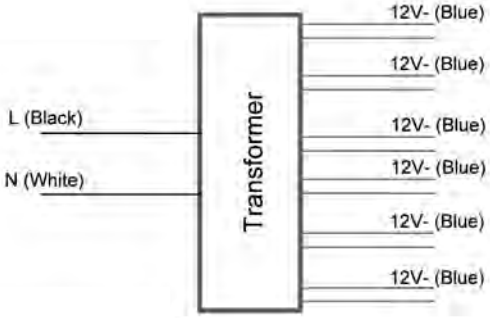

J

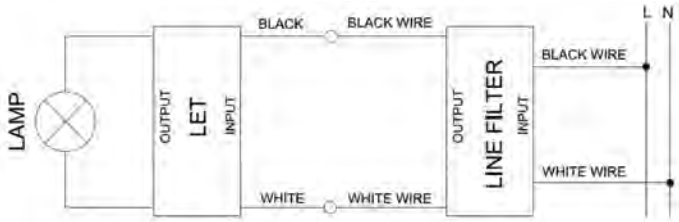

K

Table of Contents
LED Systems

Product Information

Refrigerated Display Lighting

Immersion™ RV60 LED Refrigerated Display Lighting for Vertical Cases (pg. 20-3)

- Up to 65% energy savings vs. T8 LFL Systems
- Up to 50,000 hour lifetime
- An innovative optic design directs light onto merchandise – where it belongs – instead of wasting it on the glass doors
- Cases achieve higher than average lux levels and up to 80% light uniformity across package facings
- The easily hidden light source eliminates distracting glare and light spillage, making aisles feel more spacious and your customers more comfortable

Immersion™ RH30 LED Refrigerated Display Lighting for Horizontal Cases (pg. 20-4)

- Up to 72% energy savings vs. T8 LFL Systems
- Up to 50,000 hour lifetime
- Our new Visual Comfort Lens™ diffuses the light, inhibiting LED hot spots from appearing on merchandise
- Canopy and undershelf lighting solutions work together to produce seamless uniform illumination
- An adjustable clip allows for rotation of the light bar, ensuring the light will angle precisely onto merchandise and bring out the full vibrancy of product packaging
- The slim profile is more discreet than fluorescent tubes, making sure customers see well-lit products and not the light source

Lumination™ LED Downlights (pg. 20-6)

The Lumination RS LED downlights install in just minutes into most four or six-inch recessed housings, making them ideal for use in both retrofit and new construction applications. The GE LED downlight delivers 700 or 1000 lumens at 70+ lumens per watt, bringing significant energy savings to residential, light commercial, and hospitality environments. All downlights in the RS family have instant-on, standard 120V dimming, and a uniform lit appearance, delivering premium performance in a compact, economical package.

- 5 years, limited systems warranty
- ENERGY STAR® qualified
- 35,000 hour life rating

LED Refrigerated Display Lighting
LED Systems

	Product Code (Single)	Product Code (10-Pack)	Description	Item	Color Temp (K)*	Light Output (Lumens)**	LPW	Lumens Per ft (m)	Life (Hours)	CRI (Min)	Power (Watts)***		Length (L)	Width (W)	Depth (D)
LED Refrigerated Display Lighting															
Immersion RV60 Series															
5000K	85742	85745	GELT604850CTR-SY/ SB	48" LED Light - Center	5000	896	80	222 (727)	50,000	80	11.2	(in) (mm)	48.53 1232.6	2.58 65.5	1.28 32.5
5000K	85744 85743	85747 85746	GELT604850EDL-SY/ SB GELT604850EDR-SY/ SB	48" LED Light - Left End 48" LED Light - Right End	5000	559	81	138 (454)	50,000	80	6.9	(in) (mm)	48.53 1232.6	2.09 53.1	1.59 40.4
5000K	85699	85702	GELT606050CTR-SY / SB	60" LED Light - Center	5000	1020	73	203 (665)	50,000	80	13.9	(in) (mm)	60.36 1533.1	2.58 65.5	1.28 32.5
5000K	85701 85700	85704 85703	GELT606050EDL-SY / SB GELT606050EDR-SY / SB	60" LED Light - Left End 60" LED Light - Right End	5000	569	81	113 (371)	50,000	80	7.0	(in) (mm)	60.36 1533.1	2.09 53.1	1.59 40.4
5000K	85717	85722	GELT606750CTR-SY / SB	67" LED Light - Center	5000	1227	80	218 (716)	50,000	80	15.4	(in) (mm)	67.47 1713.76	2.58 65.5	1.28 32.5
5000K	85721 85720	85724 85723	GELT606750EDL-SY / SB GELT606750EDR-SY / SB	67" LED Light - Left End 67" LED Light - Right End	5000	745	85	133 (435)	50,000	80	8.8	(in) (mm)	67.47 1713.76	2.09 53.1	1.59 40.4
4000K	85748	85751	GELT604840CTR-SY/ SB	48" LED Light - Center	4000	844	76	209 (685)	50,000	80	11.2	(in) (mm)	48.53 1232.6	2.58 65.5	1.28 32.5
4000K	85750 85749	85753 85752	GELT604840EDL-SY/ SB GELT604840EDR-SY/ SB	48" LED Light - Left End 48" LED Light - Right End	4000	534	77	132 (433)	50,000	80	6.9	(in) (mm)	48.53 1232.6	2.09 53.1	1.59 40.4
4000K	85705	85708	GELT606040CTR-SY / SB	60" LED Light - Center	4000	1023	74	203 (667)	50,000	80	13.9	(in) (mm)	60.36 1533.1	2.58 65.5	1.28 32.5
4000K	85707 85706	85710 85709	GELT606040EDL-SY /SB GELT606040EDR-SY / SB	60" LED Light - Left End 60" LED Light - Right End	4000	577	82	115 (376)	50,000	80	7.0	(in) (mm)	60.36 1533.1	2.09 53.1	1.59 40.4
4000K	85725	85728	GELT606740CTR-SY / SB	67" LED Light - Center	4000	1142	74	203 (666)	50,000	80	15.4	(in) (mm)	67.47 1713.76	2.58 65.5	1.28 32.5
4000K	85727 85726	85735 85734	GELT606740EDL-SY / SB GELT606740EDR-SY / SB	67" LED Light - Left End 67" LED Light - Right End	4000	683	78	121 (399)	50,000	80	8.8	(in) (mm)	67.47 1713.76	2.09 53.1	1.59 40.4
3500K	85754	85757	GELT604835CTR-SY/ SB	48" LED Light - Center	3500	813	73	201 (660)	50,000	80	11.2	(in) (mm)	48.53 1232.6	2.58 65.5	1.28 32.5
3500K	85756 85755	85759 85758	GELT604835EDL-SY/ SB GELT604835EDR-SY/ SB	48" LED Light - Left End 48" LED Light - Right End	3500	500	72	124 (406)	50,000	80	6.9	(in) (mm)	48.53 1232.6	2.09 53.1	1.59 40.4
3500K	85711	85714	GELT606035CTR-SY / SB	60" LED Light - Center	3500	908	65	181 (592)	50,000	80	13.9	(in) (mm)	60.36 1533.1	2.58 65.5	1.28 32.5
3500K	85713 85712	85716 85715	GELT606035EDL-SY / SB GELT606035EDR-SY / SB	60" LED Light - Left End 60" LED Light - Right End	3500	516	74	103 (337)	50,000	80	7.0	(in) (mm)	60.36 1533.1	2.09 53.1	1.59 40.4
3500K	85736	85739	GELT606735CTR-SY / SB	67" LED Light - Center	3500	1105	72	197 (645)	50,000	80	15.4	(in) (mm)	67.47 1713.76	2.58 65.5	1.28 32.5
3500K	85738 85737	85741 85740	GELT606735EDL-SY / SB GELT606735EDR-SY / SB	67" LED Light - Left End 67" LED Light - Right End	3500	667	76	119 (389)	50,000	80	8.8	(in) (mm)	67.47 1713.76	2.09 53.1	1.59 40.4

* Color temp (CCT) +/- 10%
**Based on typical in-store conditions.
***System AC watts based on typical in-store conditions.

Product Code	Description	Item		Length (L)	Width (W)	Depth (D)
Accessories						
LED Drivers						
13798	GEPS6100NCCON-SY	100W LED Driver	(in)	10.75	1.65	1.1
			(mm)	273	42	28
68595	GEPS6500NCMUL-SY	50W LED Driver	(in)	10.75	1.65	1.1
			(mm)	273	42	28
79814	GE-CV-4060CTR	Wire Cover	(in)	1.77	1.42	1.19
			(mm)	45.01	36	30.23

LED Refrigerated Display Lighting
LED Systems

	Product Code	Description	Package Quantity	Item	Color Temp (K)**	Light Output (Lumens)*	LPW	Lumens Per ft	Life (Hours)	CRI (Min)	Power (Watts)*		Length (L)	Width (W)	Depth (D)
	LED Refrigerated Display Lighting														
	Immersion RH30 LED Standard Series														
5000K	69644	48" Canopy	1	GEMT304850CAN-SY	5000	1440	67	360	50,000	80	21.5	(in)	45.0	1.3	0.9
	69645		10	GEMT304850CAN-SB								mm)	1144.0	33.7	23.2
	69650	48" Undershelf	1	GEMT304850USL-SY	5000	500	70	125	50,000	80	7.1	(in)	45.0	1.3	0.9
	69651		10	GEMT304850USL-SB								mm)	1144.0	33.7	23.2
	69642	36" Canopy	1	GEMT303650CAN-SY	5000	1078	68	359	50,000	80	15.9	(in)	34.4	1.3	0.9
	69643		10	GEMT303650CAN-SB								mm)	874.0	33.7	23.2
	69648	36" Undershelf	1	GEMT303650USL-SY	5000	371	69	124	50,000	80	5.4	(in)	34.4	1.3	0.9
	69649		10	GEMT303650USL-SB								mm)	874.0	33.7	23.2
	69640	24" Canopy	1	GEMT302450CAN-SY	5000	737	71	369	50,000	80	10.4	(in)	23.8	1.3	0.9
	69641		10	GEMT302450CAN-SB								mm)	604.0	33.7	23.2
	69646	24" Undershelf	1	GEMT302450USL-SY	5000	245	68	123	50,000	80	3.6	(in)	23.8	1.3	0.9
	69647		10	GEMT302450USL-SB								mm)	604.0	33.7	23.2
4000K	69662	48" Canopy	1	GEMT304840CAN-SY	4000	1400	65	350	50,000	80	21.5	(in)	45.0	1.3	0.9
	69663		10	GEMT304840CAN-SB								mm)	1144.0	33.7	23.2
	69668	48" Undershelf	1	GEMT304840USL-SY	4000	560	79	140	50,000	80	7.1	(in)	45.0	1.3	0.9
	69669		10	GEMT304840USL-SB								mm)	1144.0	33.7	23.2
	69660	36" Canopy	1	GEMT303640CAN-SY	4000	1020	64	340	50,000	80	15.9	(in)	34.4	1.3	0.9
	69661		10	GEMT303640CAN-SB								mm)	874.0	33.7	23.2
	69666	36" Undershelf	1	GEMT303640USL-SY	4000	420	78	140	50,000	80	5.4	(in)	34.4	1.3	0.9
	69667		10	GEMT303640USL-SB								mm)	874.0	33.7	23.2
	69652	24" Canopy	1	GEMT302440CAN-SY	4000	773	74	387	50,000	80	10.4	(in)	23.8	1.3	0.9
	69653		10	GEMT302440CAN-SB								mm)	604.0	33.7	23.2
	69664	24" Undershelf	1	GEMT302440USL-SY	4000	240	67	120	50,000	80	3.6	(in)	23.8	1.3	0.9
	69665		10	GEMT302440USL-SB								mm)	604.0	33.7	23.2
3500K	69713	48" Canopy	1	GEMT304835CAN-SY	3500	1300	60	325	50,000	80	21.5	(in)	45.0	1.3	0.9
	69714		10	GEMT304835CAN-SB								mm)	1144.0	33.7	23.2
	69719	48" Undershelf	1	GEMT304835USL-SY	3500	515	73	129	50,000	80	7.1	(in)	45.0	1.3	0.9
	69720		10	GEMT304835USL-SB								mm)	1144.0	33.7	23.2
	69711	36" Canopy	1	GEMT303635CAN-SY	3500	960	60	320	50,000	80	15.9	(in)	34.4	1.3	0.9
	69712		10	GEMT303635CAN-SB								mm)	874.0	33.7	23.2
	69717	36" Undershelf	1	GEMT303635USL-SY	3500	385	71	128	50,000	80	5.4	(in)	34.4	1.3	0.9
	69718		10	GEMT3036350USL-SB								mm)	874.0	33.7	23.2
	69709	24" Canopy	1	GEMT302435CAN-SY	3500	738	71	369	50,000	80	10.4	(in)	23.8	1.3	0.9
	69710		10	GEMT302435CAN-SB								mm)	604.0	33.7	23.2
	69715	24" Undershelf	1	GEMT302435USL-SY	3500	250	69	125	50,000	80	3.6	(in)	23.8	1.3	0.9
	69716		10	GEMT302435USL-SB								mm)	604.0	33.7	23.2
3000K	69687	48" Canopy	1	GEMT304830CAN-SY	3000	1200	56	300	50,000	80	21.5	(in)	45.0	1.3	0.9
	69688		10	GEMT304830CAN-SB								mm)	1144.0	33.7	23.2
	69695	48" Undershelf	1	GEMT304830USL-SY	3000	450	63	113	50,000	80	7.1	(in)	45.0	1.3	0.9
	69696		10	GEMT304830USL-SB								mm)	1144.0	33.7	23.2
	69685	36" Canopy	1	GEMT303630CAN-SY	3000	900	57	300	50,000	80	15.9	(in)	34.4	1.3	0.9
	69686		10	GEMT303630CAN-SB								mm)	874.0	33.7	23.2
	69691	36" Undershelf	1	GEMT303630USL-SY	3000	350	65	117	50,000	80	5.4	(in)	34.4	1.3	0.9
	69694		10	GEMT303630USL-SB								mm)	874.0	33.7	23.2
	69682	24" Canopy	1	GEMT302430CAN-SY	3000	600	58	300	50,000	80	10.4	(in)	23.8	1.3	0.9
	69684		10	GEMT302430CAN-SB								mm)	604.0	33.7	23.2
	69689	24" Undershelf	1	GEMT302430USL-SY	3000	150	42	75	50,000	80	3.6	(in)	23.8	1.3	0.9
	69690		10	GEMT302430USL-SB								mm)	604.0	33.7	23.2

*Lumens and DC watts based on typical in-store installed conditions.
**Color temp, lumens, LPW, and watts +/-10%.

LED Refrigerated Display Lighting
LED Systems

	Product Code	Description	Package Quantity	Item	Color Temp (K)**	Light Output (Lumens)*	LPW	Lumens Per ft	Life (Hours)	CRI (Min)	Power (Watts)*		Length (L)	Width (W)	Depth (D)
	LED Refrigerated Display Lighting (continued)														
	Immersion RH30 LED Premium Series														
4000K	69674	48" Canopy	1	GEMT314840CAN-SY	4000	937	44	234	50,000	75	21.5	(in)	45.7	1.3	0.9
	69675		10	GEMT314840CAN-SB								mm)	1160.0	33.7	23.2
	69680	48" Undershelf	1	GEMT314840USL-SY	4000	357	50	89	50,000	75	7.1	(in)	45.7	1.3	0.9
	69681		10	GEMT314840USL-SB								mm)	1160.0	33.7	23.2
	69672	36" Canopy	1	GEMT313640CAN-SY	4000	730	46	243	50,000	75	15.9	(in)	35.0	1.3	0.9
	69673		10	GEMT313640CAN-SB								mm)	890.0	33.7	23.2
	69678	36" Undershelf	1	GEMT313640USL-SY	4000	274	51	91	50,000	75	5.4	(in)	35.0	1.3	0.9
	69679		10	GEMT313640USL-SB								mm)	890.0	33.7	23.2
	69670	24" Canopy	1	GEMT312440CAN-SY	4000	481	46	160	50,000	75	10.4	(in)	23.8	1.3	0.9
	69671		10	GEMT312440CAN-SB								mm)	604.0	33.7	23.2
	69676	24" Undershelf	1	GEMT312440USL-SY	4000	181	50	60	50,000	75	3.6	(in)	23.8	1.3	0.9
	69677		10	GEMT312440USL-SB								mm)	604.0	33.7	23.2
3000K	69701	48" Canopy	1	GEMT314830CAN-SY	3000	812	38	203	50,000	72	21.5	(in)	45.7	1.3	0.9
	69702		10	GEMT314830CAN-SB								mm)	1160.0	33.7	23.2
	69707	48" Undershelf	1	GEMT314830USL-SY	3000	320	45	80	50,000	72	7.1	(in)	45.7	1.3	0.9
	69708		10	GEMT314830USL-SB								mm)	1160.0	33.7	23.2
	69699	36" Canopy	1	GEMT313630CAN-SY	3000	630	40	158	50,000	72	15.9	(in)	35.0	1.3	0.9
	69700		10	GEMT313630CAN-SB								mm)	890.0	33.7	23.2
	69705	36" Undershelf	1	GEMT313630USL-SY	3000	242	45	61	50,000	72	5.4	(in)	35.0	1.3	0.9
	69706		10	GEMT313630USL-SB								mm)	890.0	33.7	23.2
	69697	24" Canopy	1	GEMT312430CAN-SY	3000	427	41	142	50,000	72	10.4	(in)	23.8	1.3	0.9
	69698		10	GEMT312430CAN-SB								mm)	604.0	33.7	23.2
	69703	24" Undershelf	1	GEMT312430USL-SY	3000	160	44	53	50,000	72	3.6	(in)	23.8	1.3	0.9
	69704		10	GEMT312430USL-SB								mm)	604.0	33.7	23.2

*Lumens and DC watts based on typical in-store installed conditions.
**Color temp, lumens, LPW, and watts +/-10%.

Product Code	Description	Item		Length (L)	Width (W)	Depth (D)
Accessories						
LED Drivers						
13798	GEPS6100NCCON-SY	100W LED Driver	(in)	10.75	1.65	1.1
			(mm)	273	42	28
68595	GEPS6500NCMUL-SY	50W LED Driver	(in)	10.75	1.65	1.1
			(mm)	273	42	28
Mounting Clips						
69721	GEMT3000NCM1-SY	Universal Mounting Clip - L	(in)	1.058	1.024	1.18
69723	GEMT3000NCM1-SB		(mm)	27	26	29.9

Lumination™ LED Downlights
LED Systems

Product Code	Description	Recessed Can Size	CCT	Base Type	CRI	Lumens	Watts	LPW	Rated Life L70 (Hrs.)	Dimmable	Location Rating	Base Attachment
Lumination™ LED Downlights												
4-Inch LED Downlights												
95853	LED10RS4/827E26P	4"	2700K	E26	80	700	10	70	35,000	Yes	Damp	Pigtail
95854	LED10RS4/830E26P	4"	3000K	E26	80	700	10	70	35,000	Yes	Damp	Pigtail
95855	LED10RS4/827GUP	4"	2700K	GU24	80	700	10	70	35,000	Yes	Damp	Pigtail
95856	LED10RS4/830GUP	4"	3000K	GU24	80	700	10	70	35,000	Yes	Damp	Pigtail
6-Inch LED Downlights												
85153	LED10RS6/827E26P	6"	2700K	E26	80	700	10	70	35,000	Yes	Damp	Pigtail
85160	LED10RS6/830E26P	6"	3000K	E26	80	700	10	70	35,000	Yes	Damp	Pigtail
95851	LED10RS6/827GUP	6"	2700K	GU24	80	700	10	70	35,000	Yes	Damp	Pigtail
95852	LED10RS6/830GUP	6"	3000K	GU24	80	700	10	70	35,000	Yes	Damp	Pigtail
70120	LED13RS6/827E26P	6"	2700K	E26	80	1,000	13	75	35,000	Yes	Damp	Pigtail
70122	LED13RS6/830E26P	6"	3000K	E26	80	1,000	13	75	35,000	Yes	Damp	Pigtail
70124	LED13RS6/827GUP	6"	2700K	GU26	80	1,000	13	75	35,000	Yes	Damp	Pigtail
70127	LED13RS6/830GUP	6"	3000K	GU26	80	1,000	13	75	35,000	Yes	Damp	Pigtail

Table of Contents
Controls

Introduction

The design of the room and the amount of activity happening within the space will determine the level of sensitivity you need in your sensor. GE Aware™ Occupancy Sensors are available in three distinct technologies, so that you can be sure to find the appropriate solution for your space.

Ultrasonic (US)

Ultrasonic sensors detect occupancy by emitting a high-frequency signal and interpreting changes in frequency as motion. Ultrasonic sensors do not require a direct line of sight, meaning they can "see" around corners and objects. They are also highly sensitive to motion – even minor hand movement. They are most suitable for open spaces, spaces with obstacles in the sensor's line of sight, restrooms and spaces with hard surfaces.

Passive Infrared (PIR)

Designed to detect motion from a heat-emitting source, PIR sensors switch lights On and Off when a person enters or exits their field of view. They are best for applications that offer a direct line of sight to the source that creates the motion, such as enclosed spaces, areas where the sensor has a view of activity, outdoor areas and warehouse aisles.

Dual Tech (DT)

Dual Tech sensors combine PIR and ultrasonic technology. Lights are only activated when both sensors detect occupancy – eliminating false activation – and require one of the technologies to keep the lights on, significantly reducing the possibility of a false deactivation. They are suited for classrooms, conference rooms, areas with heavy airflow or other conditions where a higher degree of detection is preferred.

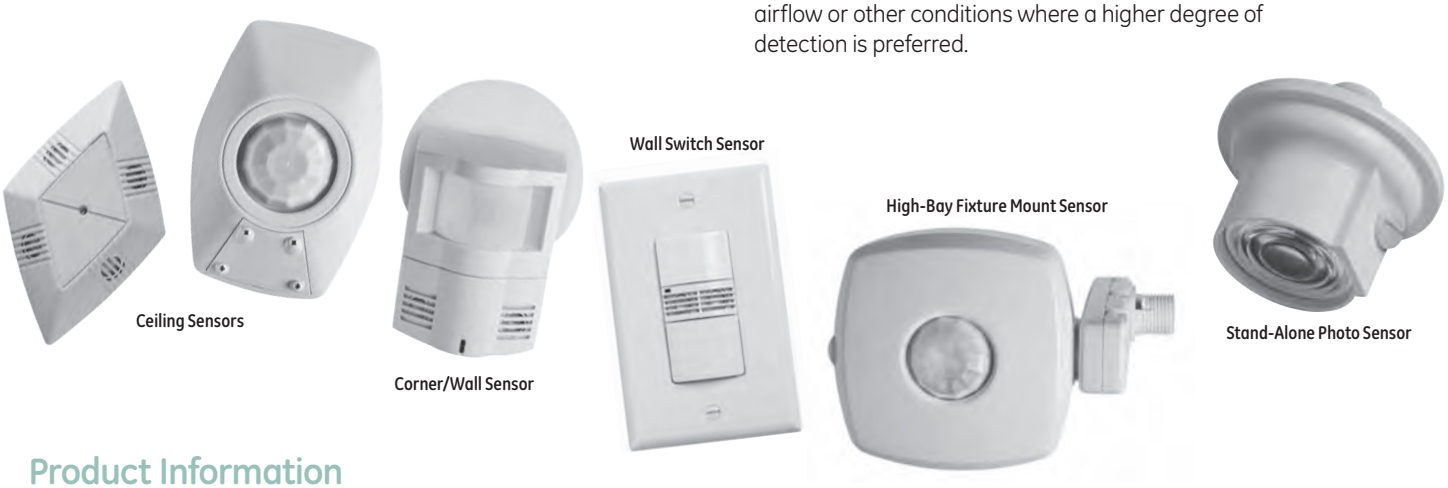

Product Information

Occupancy Sensors

Ceiling (pg. 21-3)

- Ultrasonic, Infrared and Dual Tech sensing
- 180- or 360-degree viewing area
- Small, medium or large room options
- Photocell capability
- Form C relay
- Extreme temperature and open air options (max. height 25')

Corner/Wall (pg. 21-3)

- Infrared and Dual Tech sensing
- 180-degree viewing area
- Photocell capability
- Long (hallway) or wide (room) composition
- Form C relay

Wall Switch (pg. 21-3)

- Infrared and Dual Tech sensing
- Line voltage (directly replaces wall switch) or low voltage (for switchpacks or GE LightSweep™)
- Single or dual relay
- Photocell capability
- Five colors available: white, ivory, light almond, gray, black

High-Bay Fixture Mount (pg. 21-4)

- Fixture mount
- Passive Infrared
- Line voltage (120–277V)
- Single and dual relay options
- Optional photocell

GE Aware™ Photo Sensors

Stand-Alone Photo Sensor (pg. 21-4)

- For retrofit applications (indoor use only)

Product Code	Description	Sensing Technology	Viewing Angle	Coverage Area	Additional Information
Occupancy Sensor					
GE Aware™ Ceiling Sensors - Low Voltage					
63270	CIR-05-360-D	PIR	360°	500 sq. ft.	with photocell
63272	CIR-15-360-D	PIR	360°	1500 sq. ft.	with photocell
63275	CUS-05-180	US	180°	500 sq. ft.	
63276	CUS-05-180-R	US	180°	500 sq. ft.	with aux. relay
63277	CUS-10-180	US	180°	1000 sq. ft.	
63278	CUS-10-180-R	US	180°	1000 sq. ft.	with aux. relay
63279	CUS-20-360	US	360°	2000 sq. ft.	
63280	CUS-20-360-R	US	360°	2000 sq. ft.	with aux. relay
63268	CDT-20-360-R	DT	360°	2000sq. ft.	with aux. relay
63273	CIR-15-360-D-T	PIR	360°	1500 sq. ft.	with photocell
63274	CIR-2H-360-D-T	PIR	360°	2 x mount height	with photocell
GE Aware™ Corner/Wall Sensors - Low Voltage					
63293	SIR-WIDE-D	PIR		1200 sq. ft.	with photocell
63292	SIR-WIDE	PIR		1200 sq. ft.	
63290	SIR-LONG	PIR		90 ft. linear	
63291	SIR-LONG-D	PIR		90 ft. linear	with photocell
63288	SDT-WIDE	DT		1200 sq. ft.	
63289	SDT-WIDE-D	DT		1200 sq. ft.	with photocell

Product Code	Description	Sensing Technology	Relay	Coverage Area	Voltage	Color	Additional Information
GE Aware™ Wall Switch Sensors - Line Voltage							
63295	WDT-10-SR-G-D-W	DT	Single	1000 sq. ft.	120/277	White	with photocell
63296	WDT-10-SR-G-D-V	DT	Single	1000 sq. ft.	120/277	Ivory	with photocell
63297	WDT-10-SR-G-D-A	DT	Single	1000 sq. ft.	120/277	Light Almond	with photocell
63298	WDT-10-SR-G-D-G	DT	Single	1000 sq. ft.	120/277	Gray	with photocell
63299	WDT-10-SR-G-D-B	DT	Single	1000 sq. ft.	120/277	Black	with photocell
63308	WDT-10-DR-G-D-W	DT	Dual	1000 sq. ft.	120/277	White	with photocell
63309	WDT-10-DR-G-D-V	DT	Dual	1000 sq. ft.	120/277	Ivory	with photocell
63313	WDT-10-DR-G-D-A	DT	Dual	1000 sq. ft.	120/277	Light Almond	with photocell
63314	WDT-10-DR-G-D-G	DT	Dual	1000 sq. ft.	120/277	Gray	with photocell
63315	WDT-10-DR-G-D-B	DT	Dual	1000 sq. ft.	120/277	Black	with photocell
63324	WIR-10-SR-G-D-W	PIR	Single	1000 sq. ft.	120/277	White	with photocell
63325	WIR-10-SR-G-D-V	PIR	Single	1000 sq. ft.	120/277	Ivory	with photocell
63326	WIR-10-SR-G-D-A	PIR	Single	1000 sq. ft.	120/277	Light Almond	with photocell
63327	WIR-10-SR-G-D-G	PIR	Single	1000 sq. ft.	120/277	Gray	with photocell
63328	WIR-10-SR-G-D-B	PIR	Single	1000 sq. ft.	120/277	Black	with photocell
63335	WIR-10-SR-C-D-W	PIR	Single	1000 sq. ft.	347	White	with photocell
63336	WIR-10-SR-C-D-V	PIR	Single	1000 sq. ft.	347	Ivory	with photocell
63337	WIR-10-SR-C-D-A	PIR	Single	1000 sq. ft.	347	Light Almond	with photocell
63338	WIR-10-SR-C-D-G	PIR	Single	1000 sq. ft.	347	Gray	with photocell
63339	WIR-10-SR-C-D-B	PIR	Single	1000 sq. ft.	347	Black	with photocell
63344	WIR-10-DR-G-D-W	PIR	Dual	1000 sq. ft.	120/277	White	with photocell
63345	WIR-10-DR-G-D-V	PIR	Dual	1000 sq. ft.	120/277	Ivory	with photocell
63346	WIR-10-DR-G-D-A	PIR	Dual	1000 sq. ft.	120/277	Light Almond	with photocell
63347	WIR-10-DR-G-D-G	PIR	Dual	1000 sq. ft.	120/277	Gray	with photocell
63348	WIR-10-DR-G-D-B	PIR	Dual	1000 sq. ft.	120/277	Black	with photocell

Product Code	Description	Sensing Technology	Viewing Angle	Color	Additional Information
Occupancy Sensor (continued)					
GE Aware™ Wall Switch Sensors - Low Voltage					
63393	WIR-10-LV-W	PIR	1000 sq. ft.	White	
63394	WIR-10-LV-V	PIR	1000 sq. ft.	Ivory	
63395	WIR-10-LV-A	PIR	1000 sq. ft.	Light Almond	
63396	WIR-10-LV-G	PIR	1000 sq. ft.	Gray	
63397	WIR-10-LV-B	PIR	1000 sq. ft.	Black	
63398	WIR-10-RR7-D-W	PIR	1000 sq. ft.	White	for RR7 Relay
63399	WIR-10-RR7-D-V	PIR	1000 sq. ft.	Ivory	for RR7 Relay
63401	WIR-10-RR7-D-A	PIR	1000 sq. ft.	Light Almond	for RR7 Relay
63403	WIR-10-RR7-D-G	PIR	1000 sq. ft.	Gray	for RR7 Relay
63405	WIR-10-RR7-D-B	PIR	1000 sq. ft.	Black	for RR7 Relay
GE Aware™ High-Bay Fixture Mount Sensors - Line Voltage					
64131	HB-12-SR	PIR	Single	120/277	
64132	HB-12-SR-D	PIR	Single	120/277	with photocell
64135	HB-12-DR	PIR	Dual	120/277	
64136	HB-12-DR-D	PIR	Dual	120/277	with photocell

Photo Sensor

GE Aware™ Stand-Alone Photo Sensor					
65368	PCD-IN-SA				

Coverage Diagrams

CIR-05-360-D

TOP VIEW

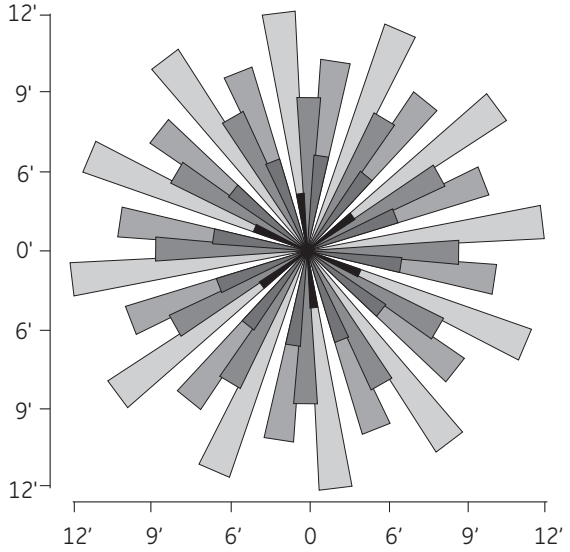

SIDE VIEW

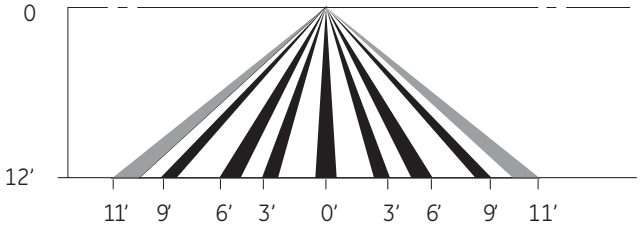

CIR-15-360-D

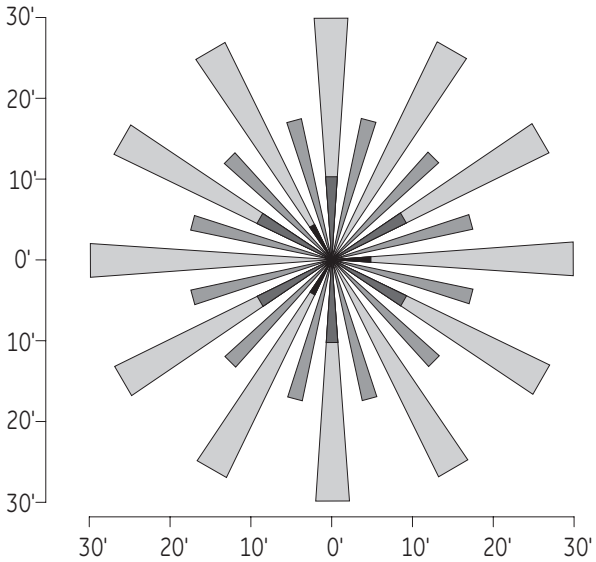

SIDE VIEW

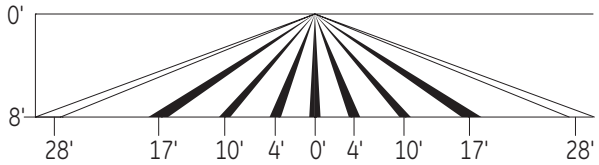

CUS-05-180(-R)

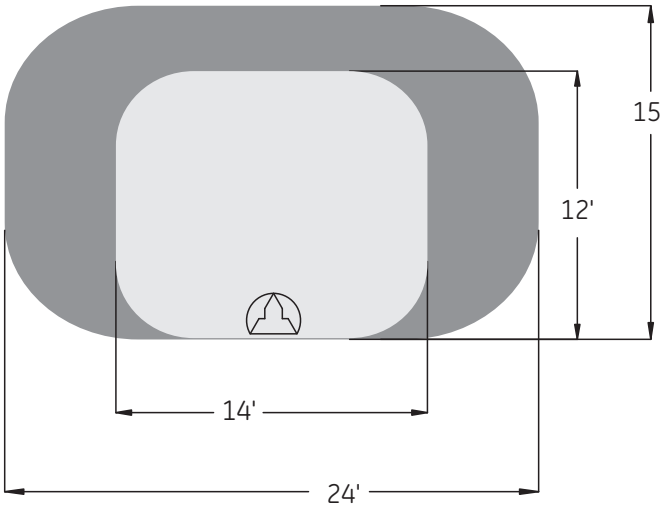

CUS-10-180(-R)

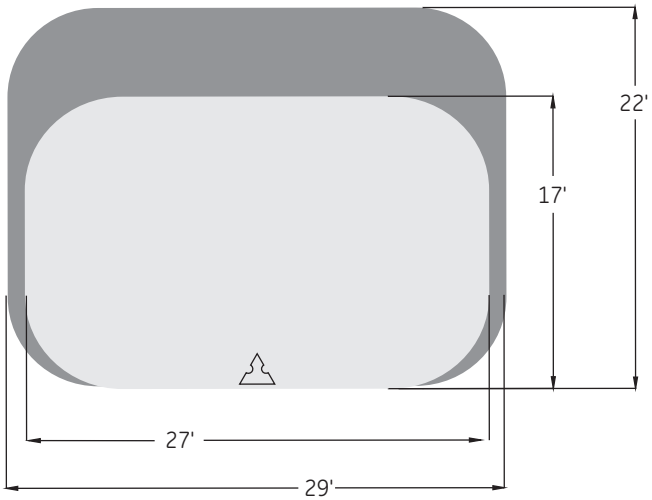

CUS-20-360(-R)

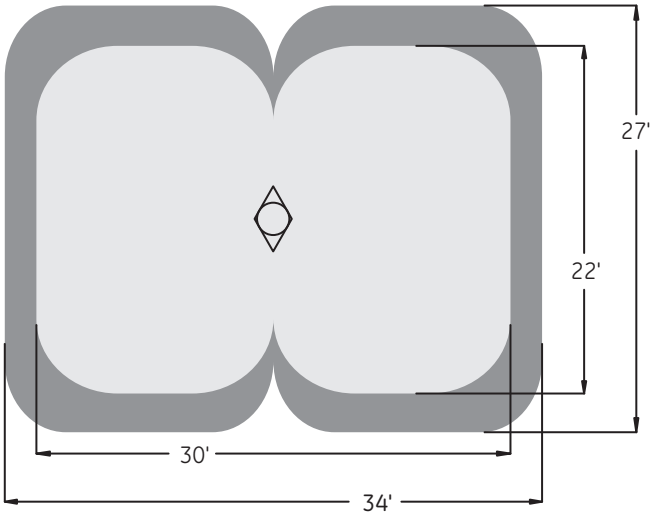

CDT-20-360-R

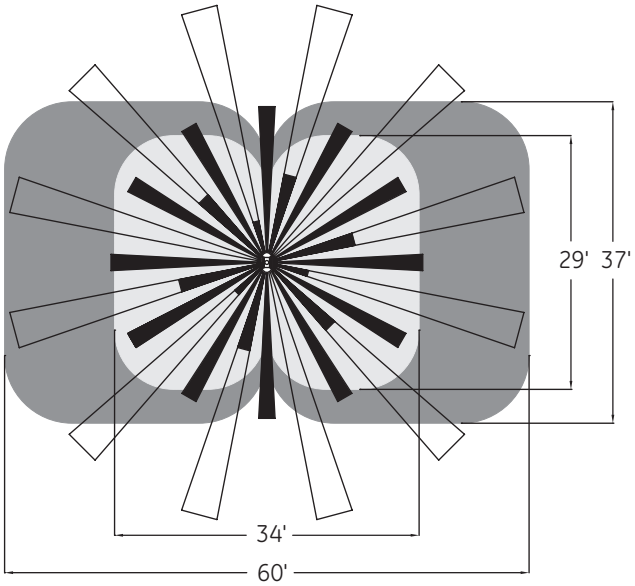

CIR-15-360-D-T

TOP VIEW

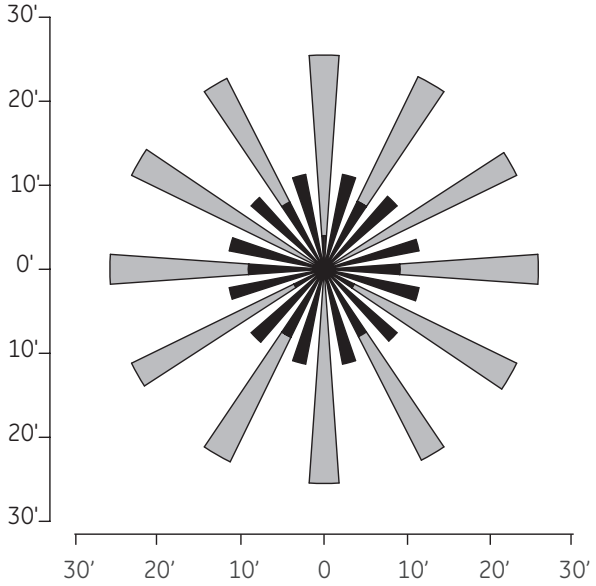

SIDE VIEW

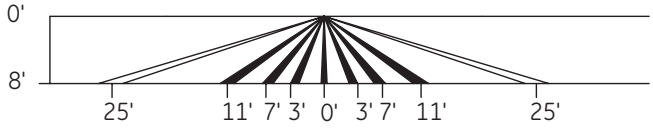

SDT-WIDE (-D)

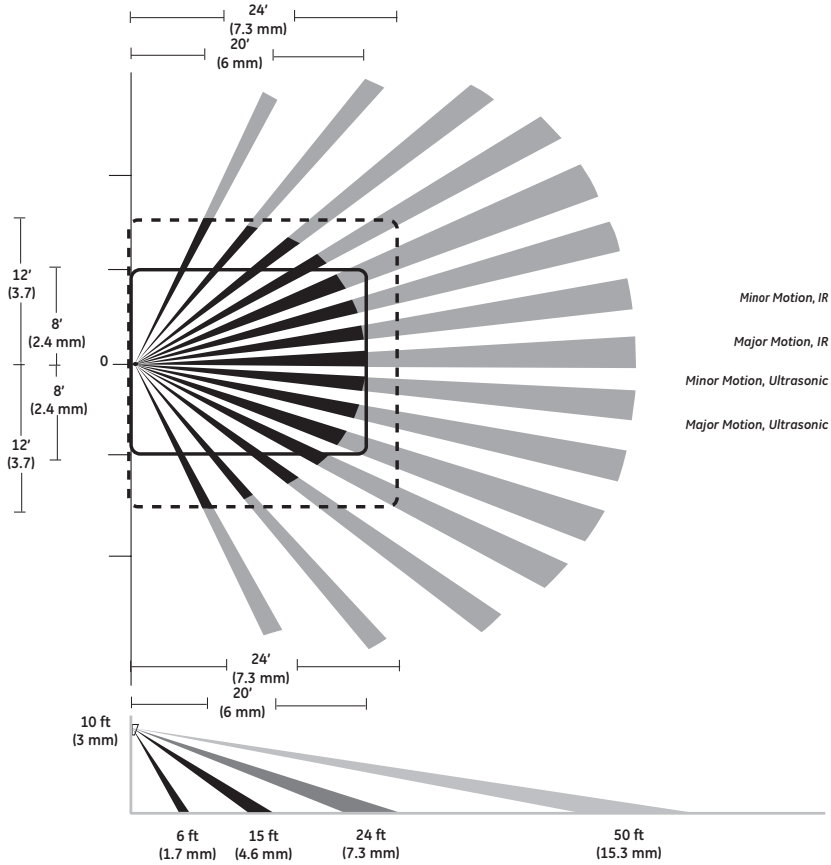

Minor Motion, IR

Major Motion, IR

Minor Motion, Ultrasonic

Major Motion, Ultrasonic

Maximum coverage area may vary somewhat according to room shape and the presence of obstacles.

The NEMA WD 7 Guide and robotic method were utilized to verify coverage patterns.

SIR-LONG (-D)

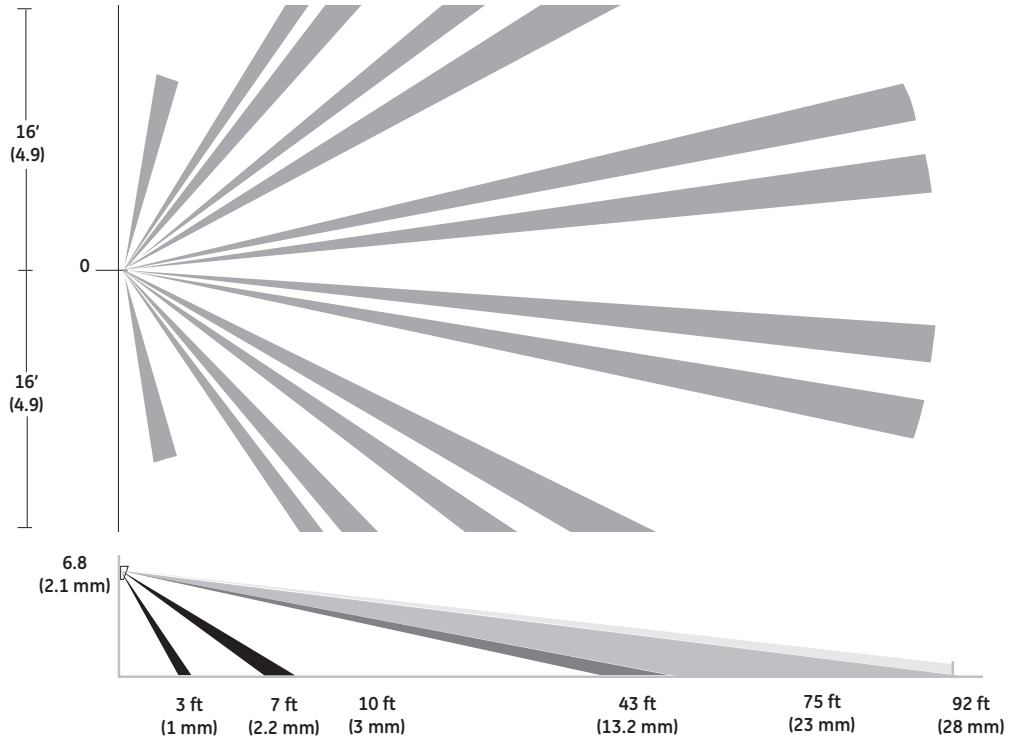

SIR-WIDE (-D)

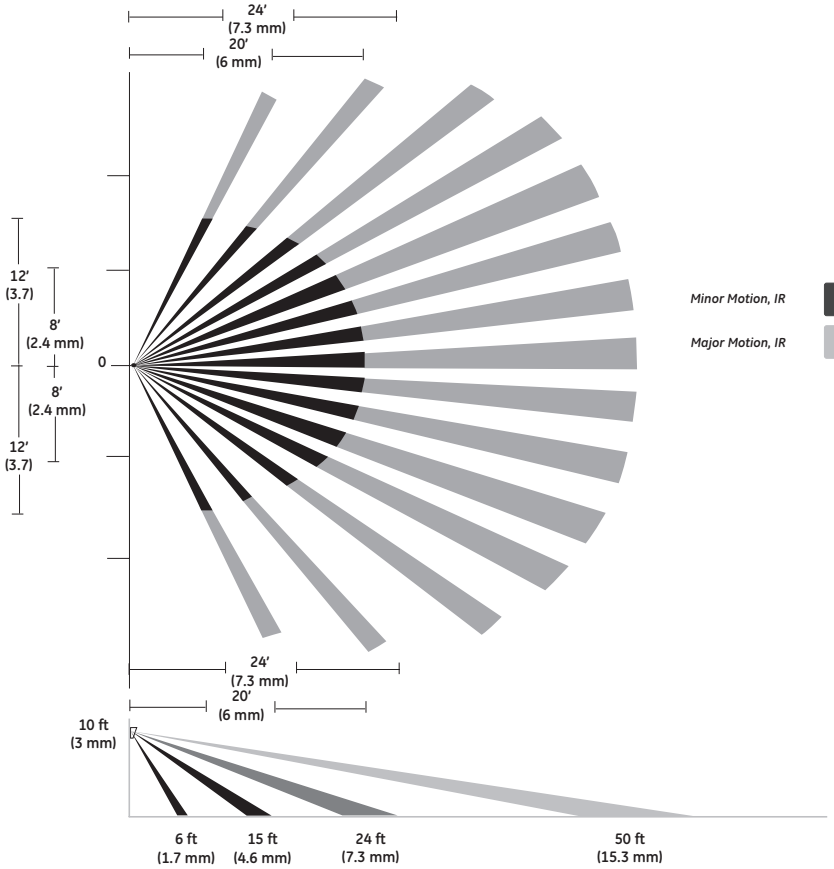

Minor Motion, IR

Major Motion, IR

Maximum coverage area may vary somewhat according to room shape and the presence of obstacles.

The NEMA WD 7 Guide and robotic method were utilized to verify coverage patterns.

WIR/WDT (all)

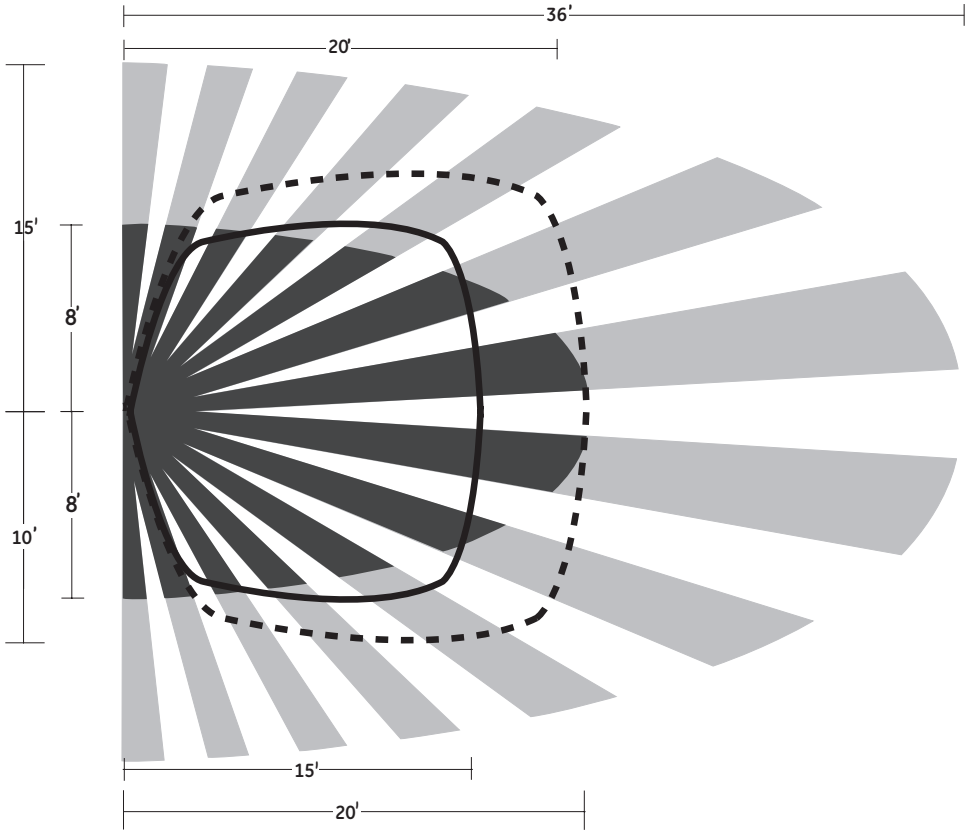

Minor Motion, IR

Major Motion, IR

Minor Motion, Ultrasonic

Major Motion, Ultrasonic

Maximum coverage area may vary somewhat according to room shape and the presence of obstacles.

The NEMA WD 7 Guide and robotic method were utilized to verify coverage patterns.

WIR(all)

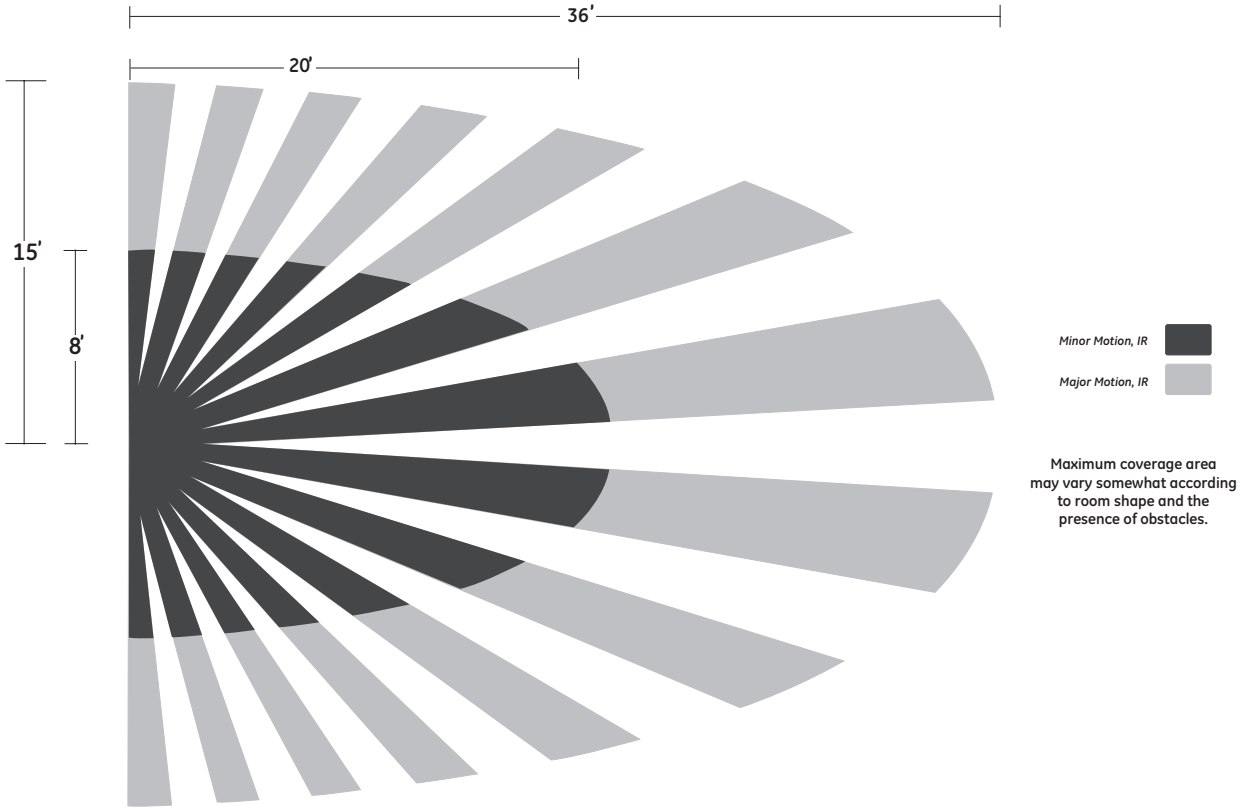

Maximum coverage area may vary somewhat according to room shape and the presence of obstacles.

Notes

Appendix

Lamp Sizing Guide

Lamp Size/Diameter

The diameter of a lamp, at its maximum dimension, is expressed in eighths of an inch. Examples: The diameter of an A19 lamp is 19-eighths of an inch, or 2-3/8", at its widest point. A T8 lamp has a diameter of 8-eighths, or one inch.

Light Center Length (L.C.L.)

The distance between the center of the filament, or arc tube, and a reference plane — usually the bottom of the lamp base. See L.C.L. Reference Plane Location chart below.

L.C.L. Reference Plane Location

Base Type	Location
All Screw Bases (except Mini-Can.)	Bottom of base contact
Mini-Can	Where diameter of ceramic base insulator is .531 inches
3-Contact Medium	Bottom of base contact
Mogul Medium Prefocus	Top of base fins
Mogul Prefocus	Top of base fins
Medium BiPost	Base end of bulb (Glass lamps) Bottom of ceramic base (Quartz lamps)
Mogul BiPost	Shoulder of posts (Glass lamps) Bottom of ceramic base (Quartz lamps)
2-Pin Prefocus	Bottom of ceramic base.
S.C. or D.C. Bayonet Candelabra	Top of base pins
Medium Bayonet	Top of base pins
S.C. or D.C. Prefocus	Plane of locating bosses on prefocus collar
Medium 2-Pin	Bottom of metal base shell

Maximum Overall Length (M.O.L.)

The end-to-end measurement of a lamp, expressed in inches or millimeters.

Important Notice

This catalog is a compilation of accumulated data. Additional information is constantly being uncovered through research and testing, which may modify the data given herein. This is particularly true of newer lamps and ballasts. Accordingly, SPECIFICATIONS ARE SUBJECT TO CHANGE WITHOUT NOTICE. For the latest lamp and ballast design data and information, contact your GE Representative.

The data and suggested applications contained in this catalog, as well as any additional information our representative may be able to furnish, are for general information only and are not intended and should not be taken as representations or warranties as to the suitability of a lamp or ballast for any particular application or use in any particular equipment, nor are our representatives authorized to make any such warranties. Applications and conditions of use are many and varied, and beyond our control. We cannot possibly have the same degree of knowledge that the purchaser has with respect to the design of his equipment and the conditions of its use. Therefore, it is up to the purchaser to make its own determination as to the suitability of a lamp or ballast for his intended application or use and to assume the responsibility for that determination.

General Electric desires to supply the best possible products at all times. For this reason, General Electric reserves the right to make changes in its products, and to introduce new products or discontinue existing ones without notice.

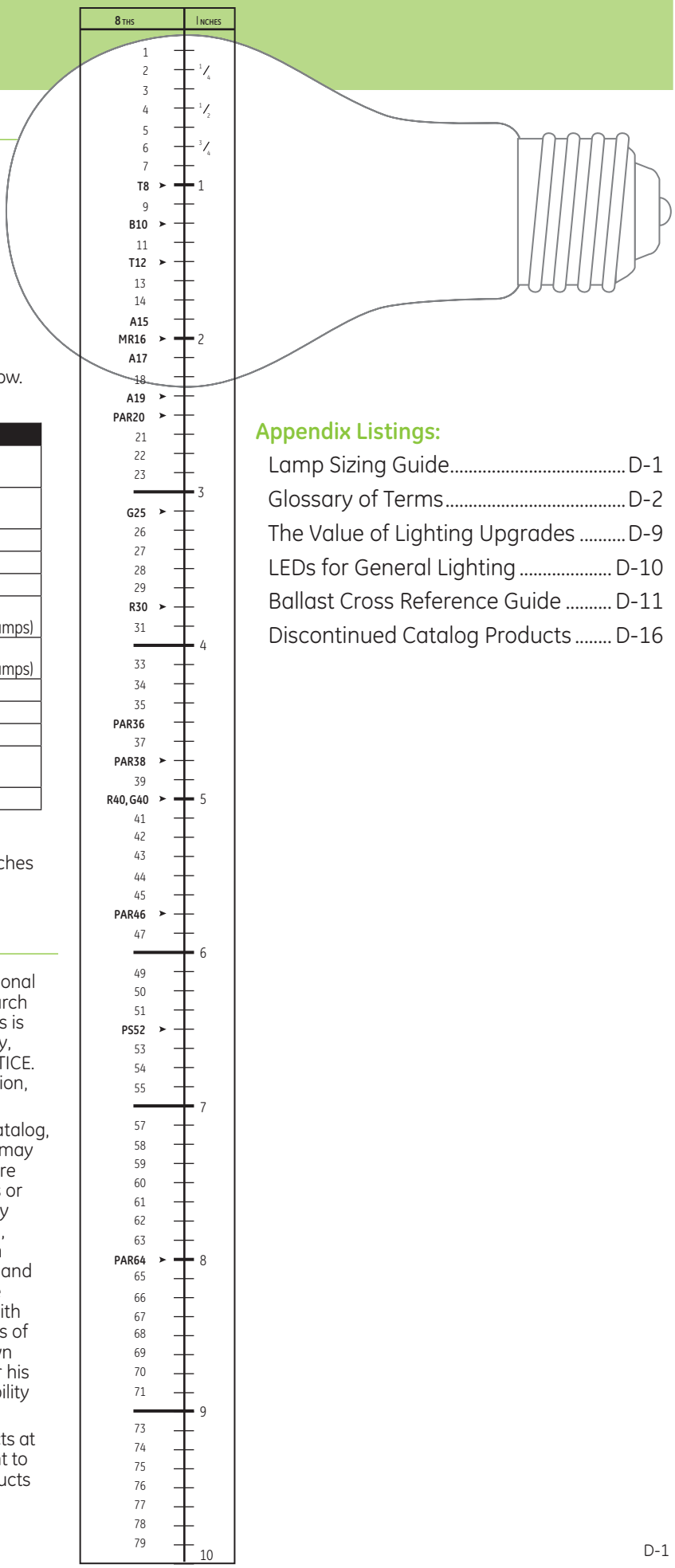

Appendix Listings:

Glossary of Terms

Ambient Temperature
Ambient temperature which refers to the temperature inside the fixture in the air surrounding the fluorescent lamp or LED. Fluorescent lamp light output and LED life are affected by the ambient temperature.

Amperes
("Amps") A measure of electrical current. In incandescent lamps, the current is related to voltage and power as follows: Watts (power) = Volts x Amps (current).

ANSI (American National Standards Institute)
A consensus-based organization which coordinates voluntary standards for the physical, electrical and performance characteristics of lamps, ballasts, luminaires and other lighting and electrical equipment.

ANSI Ballast Type
A reference to the ANSI document describing the lamp which also lists the characteristics of the ballast required to operate the lamp. Technically, therefore, it is incorrect to refer to "Ballast Type" with the ANSI code but this misuse is common. The following naming system is used: H – mercury lamps; M – metal halide lamps; S – high pressure sodium lamps; L – low pressure sodium lamps.

ANSI Codes
These are 3-letter codes assigned by the American National Standards Institute. They provide a system of assuring mechanical and electrical interchangeability among similarly coded lamps from various manufacturers. General Electric uses the assigned ANSI Codes as lamp ordering codes for most projection lamps.

Auto Reset Shutdown Circuit
Circuit senses lamp end life and will automatically shut off power to the lamp(s). When a new lamp is inserted in the socket, the ballast resets, and turns on the lamp automatically. Some shutdown circuits require the power to be cycled before a new lamp will re-light.

Ballast
An auxiliary piece of equipment required to start and to properly control the flow of current to gas discharge light sources such as fluorescent and high intensity discharge (HID) lamps. Typically, magnetic ballasts (also called electromagnetic ballasts) contain copper windings on an iron core while electronic ballasts are smaller and more efficient and contain electronic components.

Ballast Efficacy Factor (BEF)
Defined as ballast factor x 100 divided by input watts. The value is used to evaluate various lighting systems based on light output and power input. The BEF can only be used to compare systems operating the same type and quantity of lamps.

Ballast Factor (BF)
This is the percentage of a lamp's rated lumen output that can be expected when operated on a specific, commercially available ballast. Note that the "rated output" is sometimes measured on a reference ballast unlike ones that actually operate the lamp in the field. For example, a ballast with a ballast factor of 0.93 will result in the lamp's emitting 93% of its rated lumen output. A ballast with a lower BF results in less light output and also generally consumes less power.

Ballast Hum
Sound generated by the vibration of laminations in the iron core of the transformer or inductor present in the ballast.

Ballast Losses
Power or energy dissipated in the ballast as heat and not converted to lamp energy.

Ballast Luminous Efficiency (BLE)
A new (2011) metric measuring the ratio of total fluorescent lamp arc power to the input power supplied to the ballast.

Base Temperature (Maximum)
The maximum operating temperature permitted for the base in Celsius. Fixture manufacturers need to ensure that these conditions are satisfied in their fixture.

Beam Angle
The angular dimension of the cone of light from reflectorized lamps (such as R and PAR types) encompassing the central part of the beam out to the angle where the intensity is 50% of maximum. The beam angle (sometimes called "beam spread") is often part of the ordering code for reflectorized lamps. Example: The 50PAR30/HIR/NFL25 is a 50 watt PAR30 narrow flood lamp with a beam angle of 25 degrees, i.e. 12.5 degrees on either side of the center (see FIELD ANGLE).

Bi-Pin
Any base with two metal pins for electrical contact. This is the typical base for a fluorescent tube of 1 to 4 feet in length. It consists of 2 prong contacts that connect into the fixture. Medium bi-pins are used with type T-8 and T-12 tubular fluorescent lamps, and miniature bi-pins are used for tubular T-5 fluorescent lamps.

Biax®
GE trademark for its biaxial family of high-efficiency and long-life compact fluorescent lamps. DBX (Double Biax), TBX (Triple Biax) and QBX (Quad Biax) refer to the number of U-shaped legs present in the lamp.

Bright from the Start™
A GE brand name for a family of hybrid compact fluroescent lamps (CFL) that eliminate the warm up time to full brightness associated with traditional CFLs.

British Thermal Unit (BTU)
Unit of energy used in HVAC calculations.
1 BTU = 1055 joules; 1kWh = 3412 BTU.

Bulb Size
Bulb shape followed by its size (the maximum diameter of the bulb expressed in eighths of an inch). For Compact Fluorescent products, "S", "D", "T", and "Q" are used to represent Single, Double, Triple and Quad Biax® sizes. The code also includes a reference such as T4 to represent the size of the tube. Rectangular headlamps are designated as "Rect" and the number of millimeters horizontally.

Canadian Energy Standards
Indicates ballast complies with Canadian Energy Standards and meets the requirements of CAN/CSA C654-M91.

Canadian Standards Association (CSA)
Association that generates product performance and safety standards for many Canadian industries.

Candela (cd)
The measure of luminous intensity of a source in a given direction. The term has been retained from the early days of lighting when a standard candle of a fixed size and composition was defined as producing one candela in every direction. A plot of intensity versus direction is called a candela distribution curve and is often provided for reflectorized lamps and for luminaires with a lamp operating in them.

Candlepower
An obsolete term for luminous intensity; current practice is to refer to this simply as candelas (see CANDELA).

Candlepower Distribution Curve
A graphical presentation of the distribution of light intensity of a light source, usually a reflector lamp or luminaire.

Capacitor
Device in ballast that stores electrical energy. Often used for power factor correction and lamp regulation.

Cathode
Metal filaments that emit electrons in a fluorescent lamp. Negatively charged free electrons emitted by the cathode are attracted to the positive electrode (anode), creating an electric current between the electrodes (see ELECTRODE).

Cathode Resistance
Resistance of the cathode in a Fluorescent lamp. It is measured "cold" before the lamp is turned on (Rc) or "hot" after the lamp is turned on (Rh). The ratio of the hot resistance to the cold resistance is also measured (Rh/Rc).

Center Beam Candlepower (CBCP)
Refers to the luminous intensity at the center of the beam of a blown or pressed reflector lamp (such as a PAR lamp). Measured in candelas (see CANDELA).

Ceramic Metal Halide
A type of metal halide lamp that uses a ceramic material for the arc tube instead of glass quartz, resulting in better color rendering (>80 CRI) and improved lumen maintenance. GE ConstantColor® CMH® lamps feature a 3-piece arc tube design that delivers excellent color consistency and lamp reliability.

ChromaFit™
A GE brand name for metal halide lamps designed to operate on HPS ballasts, allowing a user to switch from the yellowish color of HPS to the white color of metal halide without retrofitting ballasts. These products are available in both quartz metal halide and ceramic metal halide (CMH®) versions.

Class P Thermal Protector
A switching device sensitive to current and heat that automatically disconnects ballast if the temperature exceeds UL temperature limitations.

Coefficient of Utilization (CU)
In general lighting calculations, the fraction of initial lamp lumens that reach the work plane. CU is a function of luminaire efficiency, room surface reflectances and room shape.

Coil
Windings of copper or aluminum wire surrounding the steel core in ballast. Also refers to the entire assembly comprising the inductor or transformer.

Color Quality Scale (CQS)
A new color metric proposed by NIST (US National Institute of Standards) based on fifteen color chips instead of the eight used in CRI.

Color Rendering Index (CRI)
A measure of the ability of a light source to render object colors faithfully in comparison with a designated standard light source. Incandescent objects and daylight are both considered "standard" sources. Note that "standard" is defined for convenience in reproducibility rather than being based on user preference.

Color Temperature (Correlated Color Temperature – CCT)
A number indicating the degree of "yellowness" or "blueness" of a white light source. Measured in Kelvins, CCT represents the temperature an incandescent object (like a filament) must reach to mimic the color of the lamp. Yellowish-white ("warm") sources, like incandescent lamps, have lower color temperatures in the 2700K–3000K range; white and bluish-white ("cool") sources, such as cool white (4100K) and natural daylight (6000K), have higher color temperatures. The higher the color temperature the whiter, or bluer, the light will be.

Compact Fluorescent Lamp (CFL)
The general term applied to fluorescent lamps that are single-ended and that have smaller diameter tubes that are bent to form a compact shape. Some CFLs have integral ballasts and medium or candelabra screw bases for easy replacement of incandescent lamps.

ConstantColor®
A GE registered name for lamp families that show very little color shift over life, such as GE's Precise™ MR16 lamps and GE's ceramic metal halide (CMH®) lamps.

Cool White
A term loosely used to denote a color temperature of around 4100K. The Cool White (CW) designation is used specifically for T12 and other fluorescent lamps using halophosphors and having a CRI of 62.

Core
Component of electromagnetic ballast that is surrounded by the coil. Core is comprised of steel laminations or solid ferrite material.

Core & Coil Ballast
A ballast that uses a "Core & Coil" assembly to operate fluorescent or HID lamps. Refers to copper or aluminum windings on a steel core.

Cost of Light
Usually refers to the cost of operating and maintaining a lighting system on an ongoing basis. The 88-8-4 rule states that (typically) 88% is the cost of electricity, 8% is labor and only 4% is the cost of lamps.

covRguard®
A GE lamp encased by a plastic sleeve or coating to help contain glass fragments if the lamp breaks.

Crest Factor (Lamp Current Crest Factor)
Ratio of peak to RMS for any AC waveform. Crest factor can refer to voltage crest factor or current crest factor.

Current Type (AC/DC)
Whether the operational voltage is based on Alternating Current or Direct Current.

Daylight Harvesting
Lighting design for building interiors that makes use of daylight as a way of reducing energy consumption.

Dimmer, Dimming Control
A device used to lower the light output of a source, usually by reducing the wattage it is being operated at. Dimming controls are increasing in popularity as energy conserving devices.

Discharge Lamp
A lamp where light is emitted from an electrical discharge between two electrodes as opposed to a filament lamp. Examples are: Fluorescent lamps and HID (High Intensity Discharge) lamps like Metal Halide, Mercury and High Pressure Sodium. All discharge lamps require some kind of current-limiting device, e.g. a ballast, to operate them.

Ecolux®
A brand for GE lamps that have reduced mercury content and pass the TCLP test.

Edison
GE's trademark for a wide range of halogen lamps for the consumer market.

Efficacy
A measurement of how effective the light source is in converting electrical energy to lumens of visible light. Expressed in lumens-per-watt (LPW), this measure gives more weight to the yellow region of the spectrum and less weight to the blue and red regions where the eye is not as sensitive. The efficiency of a light source is simply the fraction of electrical energy converted to light, i.e. watts of visible light produced for each watt of electrical power with no concern about the wavelength where the energy is being radiated. For example, a 100-watt incandescent lamp converts 7% of the electrical energy into light; discharge lamps convert 25% to 40% into light.

Efficiency
The efficiency of a light source is simply the fraction of electrical energy converted to light, i.e. watts of visible light produced for each watt of electrical power with no concern about the wavelength where the energy is being radiated. For example, a 100-watt incandescent lamp converts 7% of the electrical energy into light; discharge lamps convert 25% to 40% into light. The efficiency of a luminaire or fixture is the percentage of the lamp lumens that actually comes out of the fixture (see LUMINAIRE EFFICIENCY).

Efficiency of Ballast
See Ballast Luminous Efficiency.

e-HID ballast (see ELECTRONIC HID BALLAST).

Electrical Discharge
A condition under which a gas becomes electrically conducting and becomes capable of transmitting current, usually accompanied by the emission of visible and other radiation. An electric spark in air is an example of an electrical discharge, as is a welder's arc and a lightning bolt.

Electrical Testing Laboratory (ETL)
Independent testing laboratory that performs ballast tests and certifies accuracy of performance data.

Electrode
Any metal terminal emitting or collecting charged particles, typically inside the chamber of a gas discharge lamp. In a fluorescent lamp, the electrodes are typically metal filaments coated with special powders called emission mix. Negatively charged free electrons emitted by one electrode are attracted to the positive electrode (anode), creating an electric current and arc between electrodes.

Electrodeless Lamps
Light sources where the discharge occurs in a chamber with no electrodes (no metal). The energy for the discharge is supplied by radio frequency excitation, e.g. microwaves (see INDUCTION LIGHTING and GENURA®).

Electromagnetic Ballast (see MAGNETIC BALLAST).

Electromagnetic Spectrum
A continuum of electric and magnetic radiation that can be characterized by wavelength or frequency. Visible light encompasses a small part of the electromagnetic spectrum in the region from about 380 nanometers (violet) to 770 nanometers (red) by wavelength.

Electromagnetic Interference (EMI)
High-frequency electronic ballasts and other electronic devices can produce a small amount of radio waves that can interfere with radio and TV. Federally-mandated requirements must be met for EMI levels before an electronic device is considered FCC compliant (FCC is the Federal Communications Commission).

Electronic Ballast
A short name for a fluorescent high-frequency electronic ballast. Electronic ballasts use solid-state electronic components and typically operate fluorescent lamps at frequencies greater than 25 kHz. The benefits are: increased lamp efficacy, reduced ballast losses and lighter, smaller ballasts compared to electromagnetic ballasts. Electronic ballasts may also be used with HID (high intensity discharge) lamps (see MAGNETIC BALLASTS).

Electronic HID Ballast
An electronic ballast capable of operating an HID lamp. GE's UltraMax® (electronic HID ballast) operates PulseArc® (metal halide) and CMH® (ceramic metal halide) lamps between 250W and 400W and provides higher efficiency and significantly improved lumen maintenance over magnetic ballasts.

Elliptical Reflector (ER) Lamp
An incandescent lamp with a built-in elliptically shaped reflecting surface. This shape produces a focal point directly in front of the lamp which reduces light absorption in some types of luminaires. It is particularly effective at increasing the efficiency of baffled downlights.

Energy Policy Act (EPACT)
Comprehensive energy legislation passed by the U. S. Congress. The lighting portion includes lamp labeling and minimum energy efficacy (lumens/watt) requirements for many commonly used incandescent and fluorescent lamp types. Federal Canadian legislation sets similar minimum energy efficacy requirements for incandescent reflector lamps and common linear fluorescent lamps. Provisions for Tax Deductions expiring at the end of 2013.

ENERGY STAR®
As of this publication (2012) U.S. Department of Energy (DOE) designation for products meeting certain energy efficiency and performance standards. Among manufacturers of LEDs, GE has the largest number of ENERGY STAR® products as listed on the Federal Government's website.

EOL (End-of-Life Protection)
A circuit that senses that a lamp has reached

end of life (compact fluorescent lamps and small-diameter linear fluorescent lamps) and turns off power to the lamp. Continuing to power the lamp beyond end of life can result in overheating of the lamp ends.

Federal Communications Commission (FCC)
The U. S. federal agency that regulates emissions in the radio frequency portion of the electromagnetic spectrum. Part 18 of the FCC rules specifies electromagnetic interference (EMI) from lighting devices at frequencies greater than 450 kilohertz (kHz). A consumer-rated Class B ballast is designed for use in the home near TV and radio receivers. It produces less electrical noise that could interfere with consumer products. A Class A-rated ballast is designed for use in commercial and industrial applications that are not in the vicinity of TV and radio receivers.

Field Angle
The angular dimension of the cone of light from reflectorized lamps (such as R and PAR types) encompassing the central part of the beam out to the angle where the intensity is 10% of maximum (see BEAM ANGLE).

Flicker
The periodic variation in light level caused by AC operation that can lead to strobe effects.

Fluorescent HO
Fluorescent HO and VHO lamps require special ballasts that generate higher currents than standard ballasts and operate the lamps at higher wattage than standard lamps. These lamps are generally less efficient than the standard product. Metal Halide HO and XHO lamps operate on the same ballasts as standard lamps and at the same wattage but are more efficient and produce higher light output than standard lamps.

Fluorescent Lamp
A high efficiency lamp utilizing an electric discharge through low pressure mercury vapor to produce ultra-violet (UV) energy. The UV excites phosphor materials applied as a thin layer on the inside of a glass tube which makes up the structure of the lamp. The phosphors transform the UV to visible light.

Footcandle (fc)
A unit of illuminance or light falling onto a surface. It stands for the light level on a surface one foot from a standard candle. One footcandle is equal to one lumen per square foot (see LUX).

Forward Current
The current in milliamperes or amperes that the driver is pushing through the LED. For a given LED package, the higher the forward current, the higher the light output, the lower the efficacy and the poorer the lumen maintenance and expected life.

Four-Pin Compact Fluorescent Lamps
A "plug-in" compact fluorescent lamp with 4 pins in the base to make electrical contact with the ballast. Four-pin lamps can be dimmed on appropriate dimming ballasts while two-pin lamps cannot.

Frequency
Rate of alternation in an AC current. Expressed in cycles per second or Hertz (Hz).

Full Spectrum Lighting
A marketing term, typically associated with light sources that are similar to some forms of natural daylight (5000K and above, 90+ CRI), but sometimes more broadly used for lamps that have a smooth and continuous color spectrum.

Genura®
GE's electrodeless compact fluorescent lamp, Genura®, uses induction to power the discharge. The chamber generates UV (just like a discharge in a regular fluorescent lamp) that is converted by phosphors to visible light. Because Genura® uses no electrodes, the life of this unique reflector lamp is longer than typical compact fluorescent products (see INDUCTION LIGHTING).

Glare
Visual discomfort caused by excessive brightness is called discomfort glare. If task performance is affected it is called disability glare. Glare can be direct glare or indirect (reflected) glare.

Group Relamping
The practice of replacing all the lamps at an installation at one time with new lamps when the lamps have operated for (typically) 65% to 70% of rated life. The two benefits of group relamping are: (1) reduced maintenance costs because of the expense and inconvenience of replacing failing lamps one at a time, and (2) improved appearance and performance since older lamps are often degrading in brightness and color as they age.

Halogen Lamp
A halogen lamp is an incandescent lamp with a filament that is surrounded by halogen gases, such as iodine or bromine. Halogen gases allow the filaments to be operated at higher temperatures and higher efficacies. The halogen participates in a tungsten transport cycle, returning tungsten to the filament and prolonging lamp life. All halogen lamps have a tungsten filament and, often, a quartz envelope.

HIR™
GE designation for high-efficiency tungsten halogen lamps. HIR lamps utilize shaped filament tubes coated with numerous layers of materials that transmit light but reflect the heat (infrared) back onto the filament. This reduces the power needed to keep the filament hot.

Harmonic
An integral multiple of the fundamental frequency (60 Hz) that becomes a component of the current.

Harmonic Distortion (see TOTAL HARMONIC DISTORTION or THD).

Hertz (Hz)
Unit used to measure frequency of alteration of current or voltage, in cycles per second.

Highbay Lighting
Lighting designed for (typically) industrial locations with a ceiling height of 25 feet and above.

High Intensity Discharge (HID) Lamp
A general term for mercury, metal halide (GE ConstantColor® CMH®, Multi-Vapor®, MXR or Arcstream®) and high-pressure sodium (GE Lucalox®) lamps. HID lamps contain compact arc tubes which enclose various gases and metal salts operating at relatively high pressures and temperatures.

High Output/Very High Output (HO, VHO) Lamps
Designation for lamps generating more light than standard lamps.

High Power Factor
A ballast whose power factor is corrected to 90% or greater.

High-Pressure Sodium (HPS) Lamp
HPS lamps are high intensity discharge light sources that produce light by an electrical discharge through sodium vapor operating at relatively high pressures and temperatures. GE markets these lamps under the trade name of Lucalox®.

Hot Restart Time
If there is a momentary power interruption and the HID lamp goes out, there will be a delay of 10 to 15 minutes before the lamp has cooled down sufficiently to start again. This is called the Hot Restart time. PulseArc® lamps have a significantly shorter Hot Restart time (typically 3–5 minutes) than standard metal halide lamps. Lucalox® Standby lamps will start up immediately while standard Lucalox® lamps require a few minutes.

Ignitor
An electronic device providing a high voltage pulse to initiate an electrical discharge. Typically, the ignitor is paired with or is a part of the ballast.

Illuminance
The "density" of light (lumens/area) incident on a surface; i.e. the light level on a surface. Illuminance is measured in footcandles or lux.

Incandescent Lamp
A light source that generates light utilizing a thin filament wire (usually of tungsten) heated to white heat by an electric current passing through it.

Indirect Lighting
The method of lighting a space by directing the light from luminaires upwards towards the ceiling. The light scattered off the ceiling produces a soft, diffuse illumination for the entire area.

Induction Lighting
Gases can be excited directly by radio-frequency or microwaves from a coil that creates induced electromagnetic fields. This is called induction lighting and it differs from a conventional discharge, which uses electrodes to carry current into the arc. Induction lamps have no electrodes inside the chamber and generally, therefore, have longer life than standard lamps, but slightly reduced efficiency.

Infrared Radiation
Electromagnetic energy radiated in the wavelength range of about 770 to 1,000,000 nanometers. Energy in this range cannot be seen by the human eye, but can be sensed as heat by the skin.

Input Voltage
Power supply voltage required for proper operation of fluorescent or HID ballast.

Input Watts
The total power input to the ballast that includes lamp watts and ballast losses. The total power input to the fixture is the input watts to the ballast or ballasts and is the value to be used when calculating cost of energy and air conditioning loads. More than 90% of the input watts is wattage or power delivered to the lamp load with typical ballast.

Instant Start
A type of ballast designed to start fluorescent lamps as soon as the power is applied. Most T8 fluorescent lamps are being operated on electronic instant-start ballasts. Slimline fluorescent lamps operate only on instant-start circuits.

Instant-Start Lamp
A fluorescent lamp, usually with a single pin at each end, approved to operate on instant-start ballasts. The lamp is ignited by a high voltage without any filament heating.

Integral
A popular term for a compact fluorescent lamp that includes a built-in ballast (see CFL).

Joule
The fundamental unit of energy equal to 1 watt-second.

Kelvins (see COLOR TEMPERATURE).

Kilowatt (kW)
A measure of electrical power equal to 1000 watts.

Kilowatt Hour (kWh)
The standard measure of electrical energy and the typical billing unit used by electrical utilities for electricity use. A 100-watt lamp operated for 10 hours consumes 1000 watt-hours (100 x 10) or one kilowatt-hour. If the utility charges $.10/kWh, then the electricity cost for the 10 hours of operation would be 10 cents (1 x $.10).

L70, L85, etc.
L70 (or L85, etc.): The elapsed operating time over which a population of LED light sources will maintain 70% (or 85%) of its initial light output. This 70% number represents the expected median light output (which is close to the average light output) of the tested LED light source population. The value is often stated using the form L70(10K)= 50,000 Hours; this means that the LED light source's median light output reaches 70% of the initial light output at 50,000 Hours based on 10,000 hours of test data using TM-21 projection methods. When the L70 value is stated as "Reported" it means that tests have gone to at least 1/6th of the reported time as required by IESNA's TM-21 methodology. On the other hand, manufacturers will sometimes state a "Calculated" value of L70 which means they are using mathematical curve fitting and projection methods of TM-21 to project beyond 6 times the available test hours.

Laminations
Layers of steel, making up the "core" that is surrounded by the coils in a core & coil ballast.

Lamp
The term used to refer to the complete light source package, including the inner parts as well as the outer bulb or tube. "Lamp," of course, is also commonly used to refer to a type of small light fixture such as a table lamp.

Lamp Current Crest Factor
Ratio of peak lamp current to RMS or average lamp operating current.

Lamp Types

Filament lamps:	Incandescent, Halogen, Halogen-IR®.
Discharge Lamps:	Fluorescent, HID (High Intensity Discharge)
HID Lamps:	Mercury, HPS (High-Pressure Sodium), MH (Metal Halide) and CMH® (Ceramic Metal Halide)
LED	Solid State Lighting Devices

Lamp Watts
Power dissipated in the lamp—some of which is converted to light, some to heat and some to ultraviolet.

LED
Light Emitting Diode used as the primary light source in a wide array of LED lighting products. LEDs operate on low voltage DC. Also referred ot as SSL (Solid State Lighting).

Life (see RATED LAMP LIFE).

Light
Radiant energy that can be sensed or seen by the human eye. Visible light is measured in lumens.

Light Center Length (L.C.L.)
The distance between the center of the filament, or arc tube, and a reference plane—usually the bottom of the lamp base.

Light Emitting Diode (LED)
A solid that directly converts electrical impulses into light. Some LEDs today incorporate fluorescent materials to change the color characteristics of the emitted light.

Light Loss Factor (LLF)
The product of all factors that contribute to lowering the illumination level including reflector degradation, dirt, lamp depreciation over time, voltage fluctuations, temperature effects, burn-out factor, etc.

LM79
Test procedures specified by the Illuminating Engineering Society for measurements on LED products (complete assembled systems) of lumens, watts and color in actual operating environments.

LM80
Test procedures specified by the Illuminating Engineering Society for measuring lumen depreciation of LED sources, arrays and modules—not luminaires. 6000 hour testing is minimum, but this standard does not provide methods for estimating life.

Lucalox®
The GE brand name for high-pressure sodium lamps.

Lumen
A measure of luminous flux or quantity of light emitted by a source. For example, a dinner candle provides about 12 lumens. A 60-watt Soft White incandescent lamp provides 840 lumens.

Lumen Depreciation, Lumen Maintenance
A measure of how well a lamp maintains its light output over time. It may be expressed numerically or as a graph of light output vs. time. The "mean lumens" of a lamp is the lumens at 40% of rated life (50% for HPS lamp).

Lumens Per Watt (LPW)
A ratio expressing the luminous efficacy of a light source.

Typical lamp efficacies:

Edison's first lamp	1.4 LPW
Incandescent lamps	10-20
Halogen lamps	15-30
Fluorescent lamps	35-105
LED Products	45-100
Mercury lamps	50-60
Metal halide lamps	60-120
High-pressure sodium lamps	60-140

Note: The values above for discharge lamps do not include the effect of the ballasts, which must be used with those lamps. Taking ballast losses into account reduces "system" or lamp ballast efficacies typically by 10-20% depending upon the type of ballast used.

Luminaire
A complete lighting unit consisting of a lamp (or lamps), ballast (or ballasts) as required together with the parts designed to distribute the light, position and protect the lamps and connect them to the power supply. A luminaire is often referred to as a fixture.

Luminaire Efficiency
The ratio of total lumens emitted by a luminaire to those emitted by the lamp or lamps used in that luminaire.

Luminance
A photometric measure of "brightness" of a surface as seen by the observer, measured in candelas per square meter.

Luminous Efficacy
The light output (lumens) of a light source divided by the total power input (watts) to that source. It is expressed in lumens per watt (see LUMENS PER WATT).

Lux (lx)
A unit of illuminance or light falling onto a surface. Lux stands for the light level on a surface one meter from a standard candle. One lux is equal to one lumen per square meter. Ten lux approximately equals one footcandle (see FOOTCANDLE).

Magnetic Ballast
A ballast used with discharge lamps that consists primarily of transformer-like copper or aluminum windings on a steel or iron core. Also called "Core & Coil" (see ELECTRONIC BALLASTS).

Maximum Overall Length (M.O.L.)
The end-to-end measurement of a lamp, expressed in inches or millimeters.

Mean Lumens
The average light output of a lamp over its rated life. Based on the shape of the lumen depreciation curve, for fluorescent and metal halide lamps, mean lumens are measured at 40% of rated lamp life. For mercury, high-pressure sodium and incandescent lamps, mean lumen ratings refer to lumens at 50% of rated lamp life (see LUMEN MAINTENANCE).

Medium Base
Usually refers to the screw base typically used in household incandescent lamps. There is also the medium bi-pin base commonly used in T12 and T8 fluorescent lamps.

Mercury Lamp
A high-intensity discharge light source operating at a relatively high pressure (about 1 atmosphere) and temperature in which most of the light is produced by radiation from excited mercury vapor. Phosphor coatings on some lamp types add additional light and improve color rendering.

Metal Cases
Case design used in both magnetic and electronic ballasts. These ballasts are grounded once they are mounted to the fixture. They meet all safety codes, some of which do not allow plastic in open plenum areas.

Metal Halide Lamp
A high-intensity discharge light source in which the light is produced by the radiation from mercury, plus halides of metals such as sodium, scandium, indium and dysprosium. Some lamp types may also utilize phosphor coatings. GE trade names include: Multi-Vapor®, ConstantColor® CMH®, PulseArc®, Staybright®, Watt-Miser®, ChromaFit™ and Arcstream®.

Mogul Base
A screw base used on larger lamps, e.g. many HID lamps.

Mortality Curve
Lamps have a rated or expected life but individual failures occur earlier and some lamps will last

longer. The mortality curve depicts the expected percent surviving in a group of lamps at various points between zero hours and rated life or beyond. The curve starts with 100% at zero hours and goes to 50% surviving at the rated life (e.g. 3000 hours or 20,000 hours, etc.) However, the shape of the curve between these two end points can vary depending on the lamp type. LEDs have a very different mortality curve from traditional products. See L70, L85 etc. Well-manufactured LEDs are expected to have very little actual "failures" in the traditional sense.

Mounting Height
Distance from the bottom of the fixture to either the floor or work plane, depending on usage.

Multi-Vapor®
A GE brand name for metal halide lamps.

Nanometer
A unit of wavelength equal to one billionth of a meter.

National Energy Standards for Fluorescent Ballasts
A federal law enacted in 1988 that sets energy standards for ballasts consistent throughout the United States.

National Electric Code (NEC)
A nationally accepted electrical installation code to reduce the risk of fire, developed by the National Fire Protection Association.

National Stock Number
The standardized part number used by the U.S. Government for procurement.

NOM
Laboratory that sets safety standards for building materials, electrical appliances and other products for Mexico.

Non-PCB Capacitor
Capacitor used in ballasts to help provide power factor correction. Contains no polychlorinated biphenyls and meets EPA requirements.

Normal Power Factor
Ballasts with power factor less than .90 that do not incorporate any means of Power Factor Correction.

Open Circuit Voltage (OCV)
Open Circuit Voltage measured across the socket the lamp screws into, with the ballast powered on. It is dangerous to stick a voltmeter into such a socket without precise knowledge of the ballast because high voltages and voltage pulses could be present.

Operating Voltage
For electrical discharge lamps, this is the voltage measured across the discharge when the lamp is operating. It is governed by the contents of the chamber and is somewhat independent of the ballast and other external factors.

PAR Lamp
PAR is an acronym for parabolic aluminized reflector. A PAR lamp, which may utilize either an incandescent filament, a halogen filament tube or an HID arc tube, is a precision pressed-glass reflector lamp. PAR lamps rely on both the internal reflector and prisms in the lens for the control of the light beam. Today it is common to refer to LED replacement products for PAR lamps as "LED PAR Lamps" even though there may be no parabolic reflector in the package.

Parallel Lamp Operation/Parallel Wiring
Refers to ballasts that employ multiple output current paths from a single ballast to allow lamps to operate independent of one another, allowing other lamps operated by the ballast to remain lit should companion lamp(s) fail (see SERIES LAMP OPERATION).

PCB (Polychlorinated Biphenyls)
Chemical pollutant formerly used in ballast capacitors that were part of ballasts. It is now illegal to use PCBs and most such ballasts have been replaced over time.

Phosphor
An inorganic chemical compound processed into a powder and deposited on the inner glass surface of fluorescent tubes and some mercury and metal-halide lamp bulbs. Phosphors are designed to absorb short-wavelength ultraviolet radiation and to transform and emit it as visible light.

Photometry
The measurement of light and related quantities.

Photopic (see SCOTOPIC/PHOTOPIC).

Potting
Material used to completely surround and cover components of some magnetic and electronic ballasts. Potting compound fulfills functions of protecting components, dampening sound, and dissipating heat.

Power Factor (PF)
A measure of the phase difference between voltage and current drawn by an electrical device, such as a ballast or motor. Power factors can range from 0 to 1.0 with 1.0 being ideal. Power factor is sometimes expressed as a percent. Incandescent lamps have power factors close to 1.0 because they are simple "resistive" loads. The power factor of a fluorescent and HID lamp system is determined by the ballast used. "High" power factor usually means a rating of 0.9 or greater. Power companies may penalize users for using low-power-factor devices.

Power Factor Corrected
Ballasts that incorporate a means of Power Factor Correction yielding power factor of 90% or greater.

Precise™
The GE trade name for the compact MR-16 and MR-11 low-voltage halogen dichroic cool beam reflectorized spot and flood lamps.

Preheat Circuit
A type of fluorescent lamp-ballast circuit used with the first commercial fluorescent lamp products. A push button or automatic switch is used to preheat the lamp cathodes. Starting the lamp can then be accomplished using simple "choke" or reactor ballasts. A preheat fluorescent lamp is one in which the filament must be heated by use of a starter before the arc is created. These lamps are typically operated with electromagnetic ballasts.

Product Code
It is important to use this five-digit code when ordering to ensure that you receive the exact product you require.

Programmed Rapid Start
Lamp starting method which preheats the lamp filaments while not allowing the lamp to ignite and then applies the open circuit voltage (OCV) to start the lamp. The user may experience a half- to one-second delay after turning on the lamps while the preheating takes place. This type of starting circuit keeps lamp end blackening to a minimum and improves lamp life performance, especially in applications where the lamps are frequently switched on and off.

PulseArc®
GE metal halide lamp that provides improved lumen maintenance for longer useful life and extended relamp cycles. These products are designed to operate on ballasts that have ignitors to help with lamp starting.

Pulse Start
A lamp that requires an HID ballast with a high-voltage ignitor to start the lamp.

Quartz
A name for fused silica or melted sand from which many high-temperature containers are fashioned in the lighting industry. Quartz looks like glass but can withstand the high temperatures needed to contain high-intensity arc discharges.

Quartz-Halogen Lamp (see HALOGEN LAMP).

Quartzline®
A GE registered trademark term for some types of halogen lamps.

Radiation
A general term for the release of energy in a "wave" or "ray" form. All light is radiant energy or radiation, as is heat, UV, microwaves, radio waves, etc.

Rapid Start
Lamp starting method in which lamp filaments are heated while open circuit voltage (OCV) is applied to facilitate lamp ignition. A Rapid Start fluorescent lamp has two pins at each end connected to the filament. Some rapid start lamps may be instant-started without filament heat, for example, the F32T8 lamp.

Rapid Start Circuit
A fluorescent lamp-ballast circuit that utilizes continuous cathode heating, while the system is energized, to start and maintain lamp light output at efficient levels. Rapid start ballasts may be either electromagnetic, electronic or of hybrid designs. Full-range fluorescent lamp dimming is only possible with rapid start systems.

Rare Earths
A family of natural elements in the Periodic table. Rare earth compounds form an important part of the modern phosphors used in fluorescent lamps and LEDs.

Rated Lamp Life
For most lamp types, rated lamp life is the length of time of a statistically large sample between first use and the point when 50% of the lamps have died. It is possible to define "useful life" of a lamp based on practical considerations involving lumen depreciation, color shift and also on the need to reduce lamp replacement costs (see GROUP RELAMPING).

Reflector Lamp (R)
A light source with a built-in reflecting surface. Sometimes, the term is used to refer specifically to blown bulbs like the "R" and "ER" lamps; at other times, it includes all reflectorized lamps like PAR and MR.

Room Cavity Ratio (RCR)
A shape factor (for a room, etc.) used in lighting calculations.
RCR = 5H (L+W) / L x W, or, alternately,
RCR = (2.5) Total Wall Area / Floor Area.

Where H = height, L = length and W = width of the room. A cubical room will have an RCR of 10; the flatter the room the lower the RCR.

RP
A series of "Recommended Practices" issued by the Illuminating Engineering Society for various lighting applications, e.g. RP 1 for Office Lighting, RP 8 for Roadway Lighting, RP 29 for Museum Lighting, etc.

Scotopic/Photopic (S/P) Ratio
This measurement accounts for the fact that of the two light sensors in the retina, rods are more sensitive to blue light (scotopic vision) and cones to yellow light (photopic vision). The Scotopic/Photopic (S/P) Ratio is an attempt to capture the relative strengths of these two responses. S/P is calculated as the ratio of scotopic lumens to photopic lumens for the light source on an ANSI reference ballast. Cooler sources (higher-color-temperature lamps) tend to have higher values of the S/P Ratio compared to warm sources.

Self-Ballasted Lamps
A discharge lamp with an integral ballasting device allowing the lamp to be directly connected to a socket providing line voltage (see CFL).

Series Lamp Operation
Refers to ballasts that employ a single current path passing through all lamps operated by the ballast. If one lamp should fail, companion lamps operated by the same ballasts will also extinguish or dim.

Spacing to Mounting Height Ratio
Ratio of fixture spacing (distance apart) to mounting height above the work plane; sometimes called spacing criterion. It is OK to have fixture spaced closer than the spacing criterion suggested by the manufacturer but not farther, or you will get dark spots in-between fixtures.

Specification Series (SP) Colors
Energy-efficient, all-purpose tri-phosphor fluorescent lamp colors that provide good color rendering. The CRI for SP colors is 70 or above and varies by specific lamp type. See Lamp Color Chart on inside back cover.

Specification Series Deluxe (SPX) Colors
Energy-efficient tri-phosphor fluorescent lamp colors that provide better color rendering than Specification Series (SP) colors. The CRI for SPX colors is 80 or higher and varies by specific lamp type. All GE CFL products use SPX phosphors. See Lamp Color Chart on inside back cover.

Specification Series Deluxe eXtreme (SPXX) Colors
A color designation for GE ceramic metal halide lamps with superior color rendering ~ 90.

Specular Reflection
Reflection from a smooth, shiny surface, as opposed to diffuse reflection.

Spectral Power Distribution (SPD)
A graph of the radiant power emitted by a light source as a function of wavelength. SPDs provide a visual profile or "fingerprint" of the color characteristics of the source throughout the visible part of the spectrum. Also called "spectral curve" or "spectrum."

Spiral® Lamp
GE trademark for its helical family of high-efficiency, long-life compact fluorescent lamps.

Starcoat®
GE's special barrier coating applied on the inside of all GE T8 fluorescent lamps, as well as some other lamp types, to enhance lamp life and deliver superior lumen maintenance.

Starter
An electronic module or device used to assist in starting a discharge lamp, typically by providing a high-voltage surge (see IGNITOR).

Starting Temperature (Minimum)
The minimum ambient temperature at which the lamp will start reliably on the ballast.

T12, T8, T5
A designation for the diameter of a tubular bulb in eighths of an inch; T12 is 12 eighths of an inch, or 1-1/2 inches; T8 is 1 inch, and so on.

Task Lighting
Supplemental lighting provided to assist in performing a localized task, e.g. a table lamp for reading or an inspection lamp for fabric inspection.

Terminal-to-Terminal Starting Lamp Voltage (VRMS) (Minimum or Maximum)
The minimum or maximum voltage allowed into lamp from ballast under varying conditions as specified.

TCLP Test
The Toxicity Characteristic Leaching Procedure (TCLP) test, specified in the Resource Conservation and Recovery Act (RCRA) of 1990, is used to characterize fluorescent lamp waste as hazardous or nonhazardous waste. The TCLP test measures the ability of the mercury and/or lead in a lamp to leach from a landfill into ground water.

THD (see TOTAL HARMONIC DISTORTION).

TM21
Technical Memorandum developed by the Illuminating Engineering Society to provide method for projecting lumen maintenance of an LED source, array or module as a function of temperature. This will allow LED Luminaire manufacturers to predict lumen depreciation in their fixtures, based on the operating temperature of the LED in that package. See also, "L70, L85, etc."

Total Harmonic Distortion (THD)
A measure of the distortion of the input current on alternating current (AC) power systems caused by higher order harmonics of the fundamental frequency (60Hz in North America). THD is expressed in percent and may refer to individual electrical loads (such as a ballast) or a total electrical circuit or system in a building. ANSI C82.77 recommends THD not exceed 32% for individual commercial electronic ballasts, although some electrical utilities may require lower THDs on some systems. Excessive THDs on electrical systems can cause efficiency losses as well as overheating and deterioration of system components.

Transients
High voltage surges through an electrical system caused by lightning strikes to nearby transformers, overhead lines or the ground. May also be caused by switching of motors or compressors, as well as by short circuits or utility system switching. Can lead to premature ballast failure (see TVSS).

TRIAC
Genericized tradename for "Triode for Alternating Current," a device at the heart of many common residential dimmers. TRIACS reduce the current by "chopping off" portions of the AC waveform, and may adversely affect ballasts and drivers that are not designed to accept such waveform inputs.

Troffer
A long, recessed lighting unit, usually installed in an opening in the ceiling.

Tungsten Halogen Lamp (see HALOGEN LAMP).

TVSS
Transient Voltage Surge Suppressors, which will protect ballasts and other electronic equipment from transient high-voltage spikes that may be present in the power line.

Two-Pin Compact Fluorescent Lamps
Type of lamps that have the glow bottle starter built into the base of the lamp. Traditionally 2-pin lamps are designed to work with electromagnetic ballasts (see FOUR-PIN COMPACT FLUORESCENT LAMPS).

Ultra
A common way of referring to high-efficiency GE T8 family of lamps and Ballast that performs better than standard T8 lamps. Also refers to the system.

UltraMax® Ballast
A family of high-efficiency GE instant-start electronic linear fluorescent ballasts designed to optimize GE's T8 Ultra lamps for enhanced system energy savings. UltraMax® ballasts have a low lamp current crest factor and virtually "read" and adapt to incoming voltage from 108V to 305V. Other features include UL Type CC Anti-Arc Rating and anti-striation control to eliminate lamp striations and spiraling. GE also has an UltraMax® HID ballast which can operate PulseArc® and CMH® lamps anywhere from 250 watts to 400 watts and provides greatly improved lumen maintenance.

UltraStart® Ballast
A family of high-efficiency GE Program Start electronic linear fluorescent ballasts designed to optimize GE's T8 Ultra lamps in frequently switched applications. Instant-start ballast provides 10,000 starts. UltraStart® provides 100,000 to 200,000 starts. Use program start ballast to ensure long lamp life when turning lamps on and off more that twice a day.

Ultraviolet (UV) Radiation
For practical purposes, any radiant energy within the range of 100–380 nanometers. It is beyond the blue or violet region of the spectrum, and is invisible to the eye just like the silent "ultrasound" dog whistle is inaudible to the ear.

UV is divided into 3 regions:

UVC	100 to 280 nm
UVB	280 to 315 nm
UVA	315 to 400 nm

Some wavelengths (180–220) produce ozone, some (220–300) are bactericidal, some (280–320) erythemal (redden human skin); others (320–400) cause secondary luminance (black light).

Ultra Watt-Miser®
GE's family of energy-saving T8 fluorescent lamps.

Underwriters Laboratories (UL)
A private organization which tests and lists electrical (and other) equipment for electrical and fire safety according to recognized UL and other standards. A UL listing is not an indication of overall performance. Lamps are not UL listed except for compact fluorescent lamp assemblies – those with screw bases and built-in ballasts.

Glossary of Terms

Uniform Product Code (UPC)
The 12-digit code on the saleable unit that is used for scanning at the register.

Veiling Reflection
Effective reduction in contrast between task and its background caused by the reflection of light rays; sometimes called "reflected glare." You might have dealt with veiling reflections when you have to tilt a shiny magazine to avoid glare so as to read it, or struggled with reading a computer monitor because of the reflection of a window or a light fixture.

Visual Comfort Probability (VCP)
For a given lighting scheme, VCP is a ratio expressed as a percent of people who, when viewing from a specific location and in a specified direction, find the system acceptable in terms of glare (see GLARE).

Volt
A measure of "electrical pressure" between two points. The higher the voltage, the more current will be pushed through a resistor connected across the points. The volt specification of an incandescent lamp is the electrical "pressure" required to drive it at its designed point. The "voltage" of a ballast (e.g. 277 V) refers to the line voltage it must be connected to.

Voltage
A measurement of the electromotive force in an electrical circuit or device expressed in volts. Voltage can be thought of as being analogous to the pressure in a waterline.

Voltage Surge
Transient spikes in line voltage that can be harmful to electronic equipment like computers and electronic ballasts. Surge suppressors are often used to protect against such transients.

Wall Temperature (Maximum Bulb)
The maximum operating bulb wall temperature in Celsius.

Warm-Up Time
HID lamps typically take a few minutes to warm up to full brightness after starting.

Warm-Up Time to 90%
The time it takes for a High Intensity Discharge lamp to reach 90% of light output after being turned on.

Warm White
Refers to a color temperature around 3000K, providing a yellowish-white light.

Watt
A unit of electrical power. Lamps are rated in watts to indicate the rate at which they consume energy (see KILOWATT HOUR).

Wattage Indicator Reduced
Indicates that this is a reduced wattage option for lamps normally used in this application. Be sure to check wattage, lumens and life to determine which lamp is best suited to your needs.

Watt-Miser®
A Watt-Miser® lamp is a term used by GE to indicate a reduced-wattage lamp with performance characteristics (life, light output, etc.) such that it can usually directly replace a higher-wattage product. Watt-Miser® lamps are available in a wide range of incandescent, fluorescent and HID lamp types.

Wavelength
The distance between two neighboring crests of a traveling wave. The wavelength of light is between 400 and 700 nanometers.

The Value of Lighting Upgrades

About 35% of the electricity bill of commercial and industrial buildings is lighting. Upgrading to more energy-efficient lighting is an easy way to significantly reduce the overhead costs of running a business. Additional savings can be realized from using long-life lamps that reduce maintenance costs. Further, energy-efficient lighting also reduces the air-conditioning load on the HVAC system and provide greater energy savings.

Users need to be reminded that energy is usually the highest portion of the cost of lighting. A single T12 lamp will use about $100 of energy over its life; a single 400W metal halide lamp will use over $1000 in energy over life.

Remember, the products currently used in many buildings today are using products that are effectively obsolete due to technology improvements that have occurred over the last few years. There are several additional reasons to consider lighting upgrades today.

1) Legislation: many less-efficient products are being phased out by Government regulation. In each case there are better, more efficient, longer life replacements available that bring benefit both to the end-user and to the national economy because of energy savings.
2) Energy Reduction, both direct and indirect HVAC
3) Improvements in ambiance, productivity and user-satisfaction
4) Maintenance savings from longer life products
5) Environmental benefits from reduced energy consumption leading to reduced emissions, reduced or no-mercury, longer life.
6) Rebates offered by many utility companies. These rebates may go away as more and more inefficient products are eliminated
7) Tax deduction provisions of the Energy Policy Act (EPASCT) for lighting upgrades completed by end of 2013

Upgrades can involve something as simple as unscrewing the old bulb and screwing in the new bulb. However, in many cases ballasts and lamps are replaced in the existing fixture, or a retrofit kit is used to insert new holders and reflectors. Sometimes it is economically justified to replace the entire fixture with e new fixture.

Affected products that have been eliminated by legislation or are facing elimination in the immediate future based on efficiency requirements are listed in the next column:

Products Eliminated by Legislation

Incandescent Bulbs: Incandescent bulbs convert only 4% to 7% of the electrical energy into light; the rest is wasted as heat. Legislation in the US and many other countries is progressively banning the use of incandescent bulbs in most regular applications. A single incandescent 100-watt bulb operated for an entire year (8760 hrs.) will require the burning of over 1000 pounds of coal in a coal-fired power plant to generate the electricity it uses. Replacing it with an efficient LED or CFL (Compact Fluorescent Lamp) will cut energy consumption and greenhouse gas emission by 75% in addition to saving over $70 per socket at the prevailing average national energy rate of 11 cents per kWh. These products also last 10 times to 30 times longer!

Halogen Reflector Lamps: Although more efficient than standard incandescent lamps, halogen lamps are still using a hot tungsten filament to generate light. The latest HIR+ product s from GE use an infra-red reflecting film in the filament tube, and silverized reflectors to increase performance. Upgrading to these HIR+ products or to significantly more efficient, long life LED products provide significant energy savings. In many cases CMH (ceramic Metal Halide) reflector lamps can be considered, either with integral ballasts or with external ballasts. Halogen floods can be replaced with CFLs.

T12 Linear Fluorescent Lamps and some lower-performing T8s: These have been legislated away since very efficient, high-performance T8 systems are available. Also, LED fixtures are becoming a viable option to be considered for offices and classrooms. It is possible to obtain up to 45% energy savings with out loss of light when upgrading from T12 systems.

Standard Metal Halide lamps and ballasts: The old "probe start" metal halide lamps on magnetic ballasts are now eliminated by legislation for new construction, although replacement products for existing installations are still available. Upgrade options include Pulse-Start or CMH (Ceramic Metal Halide) on magnetic or electronic ballasts. For Industrial and High-bay attractive financial returns can be obtained by going to multi-lamp T8 or T5/HO fixtures. In outdoor lighting applications like parking lots and roadway, many users are upgrading from HID to LED fixtures for energy and maintenance savings.

Contact your GE distributor or GE sales rep for a simple lighting audit and a financial analysis of the benefits of lighting upgrades at your facility.

LEDs for General Lighting

LED (Light Emitting Diode) is a semiconductor chip that emits visible light when energized. LEDs are also referred to as solid state lighting (SSL) devices.

One of the first references to LEDs came in 1907 when Marconi's assistant Henry Round reported it in a letter to Electrical World after observing light emission from carborundum (silicon carbide, SiC). Round was experimenting with cat's whisker detectors, a device used in early crystal radios. Later, in 1920 the Russian scientist Oleg Losov studied the phenomenon in greater detail, publishing a number of papers on the current-voltage characteristics of SiC.

However the modern father of visible LEDs is considered to be Nick Holonyak who invented a red LED in 1962 while working at a GE lab in Syracuse, NY. Later, he moved to the University of Illinois at Urbana and a student of his, George Craford went on to invent yellow, orange and green LEDs. Finally, in the 1990s, several researchers at Nichia laboratories in Japan found ways to make efficient blue LEDs and the modern white LED was born.

Light emission from LEDs

LEDs are made of semiconducting material, not unlike what is found in transistors and computer chips. Electrons from the "n" or negative material flow into the "p" or positive material across a junction, where they encounter "holes" . When an electron falls into a hole a photon is emitted corresponding in energy to the energy lost by the electron.

If this primary photon is in the blue region of he spectrum, it is possible to add phosphors that absorb the high energy blue photon and re-emit lower energy photons of green, yellow, orange or red colors. Based on the thickness and composition of the phosphor, the color of the LED source can be changed from blue to cool white to very warm white. In general, the higher color temperature LEDs (cool color) have less phosphors and are more efficient with higher lumens per watt (LPW). Warm LEDs have to use more phosphor and pay a small price in LPW if the warmer color is desired.

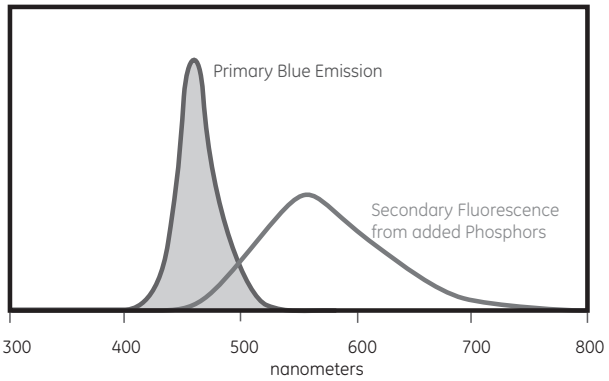

Obtaining white light from blue LEDs

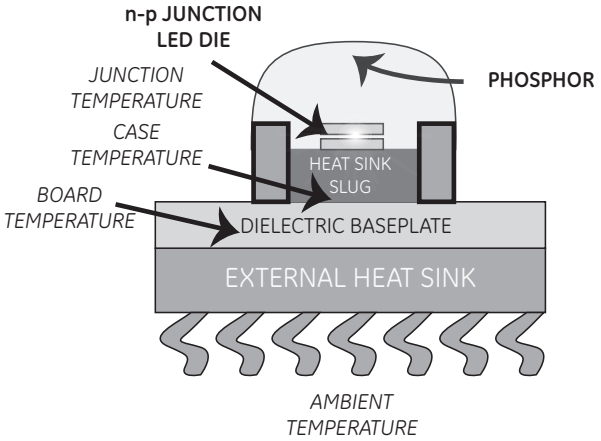

Schematic of an LED Device

Key determinants of performance

Long-term performance of LEDs is critically determined by the junction temperature of the LED—the junction being the layer where most of the primary light emission is occurring. Even though each individual LED generates only about a watt of heat, this heat can destroy the semiconductor material if it is not rapidly conducted away.

The LED chip manufacturer will often rate the LED at 100,000 hours based on the junction temperature being kept below a specified point. If overheated, a 100,000 hour LED can easily die in 10,000 hours or 1000 hours, or even 100 hours.

Thermal management of the LED, achieved through well designed heat-sinks and conduction paths is the key factor that determines LED longevity. Reliable life testing of LEDs in the finished configuration under field conditions is the only way to determine how long an actual lamp or fixture is likely to last. ANSI standard TM21 specifies how to test and rate LED life and all reputable LED manufacturers will refer to this document to validate their life ratings.

Sorting (binning) of LEDs

LED manufacturers constantly work to manage process variation and maximize yield. To this end, LEDs are sorted by three criteria—forward voltage, light output and color—and placed in appropriate "bins." ANSI requirements call for roughly a "seven step" equivalent cell, each step being the minimum color difference perceptible to the human eye. However, for more demanding applications, it is possible to pay a little more and require tighter binning, e.g. to three-steps.

The Future of LEDs

LEDs are the most promising breakthrough in Lighting in half a century. The boundaries of efficiency and life are being extended almost on a daily basis. The US Department of Energy says, "... Light Emitting Diodes (LEDs), has the potential to revolutionize the efficiency, appearance, and quality of lighting as we know it." Some experts estimate that LEDs might approach 200 lumens per watt within a few years.

Ballast cross reference matrix

Prod Code	Description	Advance P/N	Universal P/N	OSI P/N
T8 Fluorescent Ballasts				
T8 INSTANT START BALLASTS				
UltraMax® Professional Series Instant Start Multi-Voltage High Efficiency				
72258	GE132MAXP-L/ULTRA	IOP-1P32LW-SC	B132IUNVEL-A	QHE1X32T8/UNV ISL-SC-1
72259	GE132MAXP-N/ULTRA	IOP-1P32-SC	B132IUNVHE-A	QHE 1X32T8/UNV ISN-SC-1
63885	GE132MAXP-H/ULTRA	IOP-1P32HL-SC		NA
73190	GE232MAXP-H/ULTRA	IOP-2P32HL-SC	B232IUNVHEH-A	QHE2X32T8/UNV-HT-SC-1
72262	GE232MAXP-L/ULTRA	IOP-2P32LW-SC	B232IUNVEL-A	QHE2X32T8/UNV ISL-SC-1
72266	GE232MAXP-N/ULTRA	IOP-2P32-SC	B232IUNVHE-A	QHE 2X32T8/UNV ISN-SC-1
71421	GE232MAXP-N+		NA	QHE 2X32T8/UNV ISM-SC
71714	GE332MAXP-H/ULTRA	IOP-3P32HL-90C-SC	B332IUNVHEH-A	NA
71717	GE332MAXP-L/ULTRA	IOP-3P32LW-SC	B332IUNVEL-A	QHE3X32T8/UNV ISL-SC-1
71719	GE332MAXP-N/ULTRA	IOP-3P32-SC	B332IUNVHE-A	QHE 3X32T8/UNV ISN-SC-1
71422	GE332MAXP-N+			QHE 3X32T8/UNV ISM-SC
71723	GE432MAXP-H/ULTRA	IOP-4P32HL90CG		QHE4X32T8/UNV-HT-SC-1
71725	GE432MAXP-L/ULTRA	IOP-4P32LW-SC	B432IUNVEL-A	QHE4X32T8/UNV ISL-SC-1
71727	GE432MAXP-N/ULTRA	IOP-4P32-SC	B432IUNVHE-A	QHE 4X32T8/UNV ISN-SC-1
74117	GE632MAXP-H90		NA	NA
71423	GE432MAXP-N+		NA	QHE 4X32T8/UNV ISM-SC
72261	GE159MAXP-N/ULTRA	IOP-2P59-SC	NA	NA
73199	GE259MAXP-L/ULTRA		B259I120HPL / B259I277HPL	QHE 2x59T8/UNV-ISI-SC
49767	GE259MAXP-N/ULTRA	IOP-2P59-SC	NA	QHE 2x59T8/UNV ISN-SC-B
UltraMax® Professional Series Instant Start 347V High Efficiency				
67435	GE232MAXP347-N+	NA	NA	
74093	GE232MAXP347-N	GOPA-2P32-SC		QHE2X32T8/347 ISN-SC
74094	GE332MAXP347-N	GOPA-3P32-SC		QHE3X32T8/347 ISN-SC
74095	GE432MAXP347-N	GOPA-4P32-SC		QHE4X32T8/347 ISN-SC
74096	GE232MAXP347-L	GOPA-2P32-LW-SC	B232I347L-A, B232I347HPL	QHE2X32T8/347 ISL-SC, QT2X32T8/347 ISL-SC
74097	GE332MAXP347-L	GOPA-3P32-LW-SC	B332I347L, B332I347HPL	QHE3X32T8/347 ISL-SC
74098	GE432MAXP347-L	GOPA-4P32-LW-SC	B432I347L, B432I347HPL	QHE4X32T8/347 ISL-SC, QT4X32T8/347 ISL-SC
74109	GE232MAXP347-H			QT2X32T8/347 ISH-SC
74111	GE332MAXP347-H		B332IHRVH-E, B332IHRVHB-E	
74113	GE432MAXP347-H			
UltraMax® Professional Series T8 Instant Start 480V High Efficiency				
62718	GE232MAXP480-H			
62719	GE332MAXP480-H		B332IHR VHB-E	
62720	GE432MAXP480-H			QHE4X32T8/347-480 ISH-HT
UltraMax® General Series T8 Multivolt 120V - 277V				
72269	GE132MAX-G-N	ICN-1P32-SC / IOPA-1P32-SC	B132IUNVHP-B	QTP 1X32T8/UNV ISL-SC/ QHE 1X32T8/UNV ISN-SC
74803	GE232MAX-G-H	IOPA-2P32-HL	B232I120RHH-A/B232I277RHH-A	QTP 2X32T8/UNV ISH-SC/ QHE 2X32T8/UNV ISH-SC
67911	GE432MAX-G-H	IOP-4P32HL-SC	B4321277HEH	
72273	GE232MAX-G-L	ICN-2P32LW-SC / IOPA-2P32LW	B232I120L-A/B232I277L-A	QTP 2X32T8/UNV ISL-SC/ QHE 2X32T8/UNV ISL-SC
72275	GE232MAX-G-N	ICN-2P32-SC / IOPA-2P32-SC	B232IUNVHP-B	QTP 2X32T8/UNV ISN-SC/ QHE 2X32T8/UNV ISN-SC
74461	GE332MAX-G-H	IOPA-3P32-HL	B332I120RHH-A/B332I277RHH-A	QTP 3X32T8/UNV ISH-SC/ QHE 3X32T8/UNV ISH-SC
74459	GE332MAX-G-L	ICN-3P32LW-SC / IOPA-3P32LW	B332I120L-A/B332I277L-A	QTP 3X32T8/UNV ISL-SC/ QHE 3X32T8/UNV ISL-SC
74456	GE332MAX-G-N	ICN-3P32-SC / IOPA-3P32-SC	B332IUNVHP-B	QTP 3X32T8/UNV ISN-SC/ QHE 3X32T8/UNV ISN-SC
69711	GE432MAX-G-H	IOPA-4P32-HL	B432I120RHH-A/B432I277RHH-A	QHE 4X32T8/UNV ISH-SC
74466	GE432MAX-G-L	ICN-4P32LW-SC / IOPA-4P32LW	B432I120L-A/B432I277L-A	QTP 4X32T8/UNV ISL-SC/ QHE 4X32T8/UNV ISL-SC
30193	GE432MAX-G-N	ICN-4P32-SC IOPA-4P32SC	B432IUNVHP-B	QTP 4X32T8/UNV ISN-SC/ QHE 4X32T8/UNV ISN-SC
72271	GE159MAX-G-N			
74469	GE259MAXP-G-N	NA	B259IUNVHP-B	QTP 2X59T8/UNV ISN-SC/ QHE 2X59T8/UNV-ISN-SC
UltraMax® Professional Series T8 Instant Start High Output				
63888	GE286MAXP-HO-N	ICN-2S86	B286I120RH / B286I277RH	QHE 2X86T8HO/UNV-PSN-HT-SCL/ QHE2X59T8/UNV-ISH
UltraMax® General Series T8 Multivolt 347V				
74101	GE132MAX-G-N-347		B132I347HP, B132I347RH	QHE1X32T8/347 ISN-SC, QTP1X32T8/347 /ISN-SC
74103	GE232MAX-G-N-347		B232I347HP-A, B232I347RH-A	QTP2X32T8/347 ISN-SC
74105	GE332MAX-G-N-347		B332I347HP	QT3X32T8/347 ISN-SC
74107	GE432MAX-G-N-347		B432I347HP, B432I347RH	QT4X32T8/347 ISN-SC
74099	GE259MAX-G-N-347		B259I347HP	QT2X59/347 IS

See page E-1 for warranty information.

Ballast cross reference matrix (cont.)

Prod Code	Description	Advance P/N	Universal P/N	OSI P/N
T8 Fluorescent Ballasts - Continued				
T8 INSTANT START BALLASTS - CONTINUED				
Residential Grade ProLine® T8 120V				
97782	GE232-120-RES	REB232-SC	B232I120RES-A	QTR 2x32T8/120 ISN-SC
97783	GE432-120-RES	REB4P32-SC	B432I120RES-A	QTR 4x32T8/120 ISN-SC
Electromagnetic T8 Ballasts				
87125	GEM232T8RS120	R-2P32-TP	M232SR120C	
T8 PROGRAM START BALLASTS				
UltraStart® T8 Program Rapid Start				
75952	GE132-MVPS-L	IOP-1S32-LW-SC		QTP 1x32T8/UNV PSX-TC
75953	GE132-MVPS-N	IOP-1S32-SC	B132PUNVHP-A	QTP 1X32T8/UNV PSN-TC
75954	GE132-MVPS-H			
96714	GE232-MVPS-N	IOP-2S32-SC	B232PUNVHP-A	QTP 2X32T8/UNVPSN-TC
96720	GE232-MVPS-L	IOP-2S32-LW-SC		QTP 2X32T8/UNV PSX-TC
29675	GE-232-MVPS-H			QHE2x32T8/UNV-PSH-HT
29671	GE-232-MVPS-XL			
29676	GE-332-MVPS-H			
96715	GE332-MVPS-N	IOP-3S32-SC	B332PUNVHP-A	QTP 3X32T8/UNVPSN-SC
96721	GE332-MVPS-L	IOP-3S32-LW-SC		QTP 3X32T8/UNV PSX-SC
29672	GE-332-MVPS-XL			QHE3x32T8/UNV-PSH-HT
96716	GE432-MVPS-N	IOP-4S32-SC	B432PUNVHP-A	QTP 4X32T8/UNVPSN-SC
71832	GE432-MVPS-L	IOP-4S32-LW-SC		QTP 4X32T8/UNV PSX-SC
29678	GE-432-MVPS-H			QHE4x32T8/UNV-PSH-HT
T8 Bi-Level Instant Start Step Dimming 100% to 60%				
73233	GE232MAXP90-S60			
73231	GE332MAXP90-S60			
73229	GE432MAXP90-S60			
71497	GE632MAXP-H90-S60			
T8 Bi-Level Instant Start Load Shedding 100% to 60%				
73234	GE232MAXP90-V60			
73232	GE332MAXP90-V60			
73230	GE432MAXP90-V60			
71731	GE632MAXP-H90-V60			
T8 Bi-Level Program Start Step Dimming 100% to 30%				
68966	GE132MVPS-N-S30			
68967	GE232MVPS-N-S30	IOP-232-SC-SD	B232PUS50PLA	QHES2x32T8PSN
68968	GE132MVPS-L-S30			QHES2x32T8PSL
T8 Program Start 0-10v Dimming 100% to 3%				
75379	GE132MVPS-N-V03	IZT-132-SC	B132R120V5 / B132SR277V5	
75380	GE232MVPS-N-VO3	IZT-232-SC/ ILV-2S32-SC	B232SR120V5 / B232SR277V5	
75381	GE332MVPS-N-VO3	IZT-332-SC	B332SR120V5 / B332SR277V5	
75382	GE432MVPS-N-VO3	IZT-432-SC/ ILV-4S32-G	B423SR120V5/ B432SR277V5	QTP 4x32T8/ 277 DIM PLUS-TCL
75383	GE232MVPS-H-V03			
75384	GE332MVPS-H-V03			
75385	GE432MVPS-H-V03			
T5 Fluorescent Ballasts				
T5 ELECTRONIC PROGRAMMED START BALLASTS				
UltraStart® T5 Programmed Rapid Start				
68994	GE228MVPSH-MC-H	IOP2S28115SC	B228PUNV115-D	QTP2X28T5/UNVPSN NL
68993	GE228MVPS-MC	IOP2S2895SC	B228PUNV95-D	QTP2X28T5/UNVPSN-E
68976	GE-224MVPS-N	ICN-2S24	B224PUNV-D	QTP2X39-24T5HO/UNVPSN NL
47540	B239PUNV-D	ICN-2S39	B239PUNV-D	QTP2X39-24T5HO/UNVPSN NL
67562	GE254MVPS90-A	ICN-2S54-90C	B254PUNV-D	QTP 2X54T5HO/UNV PSN HT
33957	GE254MVPS-D-1	ICN-2S54	B254PUNV-D	QTP2X54T5HO/UNVPSN NL
94131	GE454MVPS90-E-S	ICN4S5490C2LSG	B454PUNV-E	QTP 4X54T5HO/UNV PSN HTW NL
67566	GE454MVPS90-F	ICN4S5490C2LS		QTP 4X54T5HO/UNV PSN HT
72280	GE180MVPS-D	ICN-1S80-120V / ICN-1S80-277V	ES4515K	QTP1X80T5HO/UNVPSN NL
UltraStart® T5 Programmed Rapid Start 347-480V				
62728	GE254PS347/480-F	HOP2PSP54L/347-480V	B254PHRVHB-E	QHE2x54T5HO/347-480PSN-HT
62729	GE254PS347-F	HOP2PSP54L/347V		
62730	GE454PS347/480-E	HOP4PSP542LSG/347-480V		QHE4x54t5HO/347-480PSN-HT-SCL
62731	GE454PS347-F	HOP4PSP542LSG/347V		

See page E-1 for warranty information.

Prod Code	Description	Advance P/N	Universal P/N	OSI P/N
T12 Fluorescent Ballasts				
T12 ELECTRONIC BALLASTS				
ProLine® T12 Multivolt 120V - 277V				
74472	GE-240-RS-MV-N	ICN-2S40-N	B240R120HP/B240R277HP	QTP2X40T12/120RSN-SC / QTP2x40T12/277 RSN-SC
97498	GE240RS120	REL-2S40-SC/RELB-2S40-SC	B234SR120M-A	QTP2X40T12/120RSN-SC
75672	GE140RS120	REL-1S40-SC	B134SR120M-A	QTP1X40T12/120/277RSN-SC
74474	GE-260-IS-MV-N	R2E75STP	B260IUNVHP	QT2x96/120IS/QT2x96/277IS
75671	GE296HO-MV-N	REL/VEL-2P60-S-A/REL/VEL-2S110	B295SR UNVHP/120HP/277HP	QT2x96/120HO/QT2x96/277HO
Magnetic Ballast				
68190	GEM1FC16T9RS120	RMS-3240-TP-W	726VLHWSTCP	
68193	GEM1FC8T9RS120IP	RLQS-122-TP-W	547RSWSTCP	
89717	GEM1FC12T9RS120	RS-22-32-TP-W	449LRWSTCP	
68192	GEM220TS120DIY	RS-2SP20-TP	447LRVLHTCP	
T12 Electronic for Magnetic				
72110	GE140RS120 DIY RES	LC-14-20-C-TP/ HM1P30TPI	200H2	
72110	GE140RS120 DIY RES	RLQ-120-TP	546BTCP	
72110	GE140RS120 DIY RES	R-140-TP	412LSLHTCP	
72110	GE140RS120 DIY RES	RL-140-TP	413CTCP	
97498	GE240RS120 RES	R2S34-TPI/ RS240TPI	420LTCP	
97498	GE240RS120 RES	RM2SP30TPI	446LSLHTCP	
74472	GE-240-RS-MV-N	V2S40TP / V2S34TPI/ V140TPI	443LSLHTCP	
74472	GE-240-RS-MV-N	MTM-2S40-TP	754LTCP	
74474	GE-260-IS-MV-N	RSM175STP/ SM140STPI / SM2E40STPI	822BRTCP	
74474	GE-260-IS-MV-N	VSM175STP	828BRTCP	
74474	GE-260-IS-MV-N	R2E75STP	806SLHTCP	
74474	GE-260-IS-MV-N	V2E75STP	827SLHTCP	
75671	GE296HO-MV-N	R-2S110-TP/ RC2S85TPM	480SLHTCP	
75671	GE296HO-MV-N	V-2S110-TP/ VC2S85TPM	487SLHTCP	
Sign Ballasts				
72103	GESB-0412-12-IP	ASB-0412-12-BL-TP	USB-0412-12-IP	MSB-12-0412-TP
72104	GESB-0620-24-IP	ASB-0620-24-BL-TP	USB-0816-14-IP	MSB-24-0620-TP
72105	GESB-1224-24-IP	ASB-1224-24-BL-TP	USB-1024-14-IP	MSB-24-1224-TP
72106	GESB-1240-46-IP	ASB-1240-46-BL-TP	USB-2036-46-IP	MSB-46-1240-TP
72107	GESB-2040-46-IP	ASB-2040-24-BL-TP	USB-1632-24-IP	MSB-24-2040-TP
72108	GESB-2448-46-IP	ASB-2448-46-BL-TP	USB-2048-46-IP	MSB-46-2448-TP
Compact Fluorescent Ballasts				
CFL ELECTRONIC				
63091	GEC213-MVPS-BES	ICF-2S13-BS	C213UNVBS	QTP1/2X13CF/UNVBS
63092	GEC213-MVPS-SE	ICF-2S13-LD	C213UNVBES	QTP1/2X13CF/UNVTS
63089	GEC213-MVPS-3W	ICF-2S13-H1-LD-K	C213UNVME00K	QTP 1/2x13CF/UNV
63094	GEC218-MVPS-BES	ICF-2S18-BS	C218UNVBS	QTP1/2X18CF/UNVBS
63096	GEC218-MVPS-SE	ICF-2S18-LD	C218UNVBES	QTP1/2X18CF/UNVTS
63093	GEC218-MVPS-3W	ICF-2S18-H1-LD-K	C218UNVME000K	QTP 1/2x18CF/UNV
63098	GEC226-MVPS-BES	ICF-2S26-BS	C2642UNVBES-IP	QTP2X26CF/UNVBS
63099	GEC226-MVPS-SE	ICF-2S26-LD	C2642UNVSE-IP	QTP2X26CF/UNVTS
63097	GEC226-MVPS-3W	ICF-2S26-H1-LD-K		QTP 1/2x26CF/UNV
63101	GEC242-MVPS-BES	ICF-2T42-M5-BS	C2642UNVBE	QTP2X26/32/42CF/UNVPM
63102	GEC242-MVPS-SE	ICF-2T42-M5-LS	C2642UNVSE	QTP2X26/32/42CF/UNVTM
63100	GEC242-MVPS-3W	ICF-2T42-M5-BS	C2642UNVSE	QTP2X26/32/42CF/UNVTM
75948	GEC140MAX-A	ICN-1TTP40		
75950	GEC225MVPS-A			
71437	GEC240MVPS-A	REL-2TTS40	C240PUNVHP-B-IP	QHE 1x40/UNV DL ISN-SC
71435	GEC240MAX-A	RCN-2TTP40-SC / VCN2TTP40-SC / ICN-2TTP40-SC	C240SI120RH-IP / C240SI277RH-IP	QHE 2x40/UNV DL ISN-SC
71436	GEC340MAX-A	RCN-3TTP40-SC / VCN-3TTP40-SC/ ICN3TTP40-SC	C340SI120RH-IP/C340SI277RH-IP	QHE 3x40/UNV DL ISN-SC
87533	GEM1CF13PH120	LC-13-TP	4111H2P	
87655	GEM2CF13PH277	VH-2B13-TP-BLS	4214PBES	

See page E-1 for warranty information.

Ballast cross reference matrix (cont.)

Prod Code	Description	Advance P/N	Universal (Vossloh Schwabe)	OSI P/N
HID Electronic Ballasts				
87490	GEMH20-MLF-120	RMH-G20-K	M2012CK-7EUN-F	QTP1X20MH/UNV F
74115	GEMH20-MC-120	RMH-G20-K	M2012CK-7EUN-F	
63042	GEMH20-MSJ-MV	IMH-G20-G	M2012-27CK-6EU-J	
63043	GEMH20-MSF-MV	IMH-G20-G	M2012-27CK-5EU-F	
75378	GEMH39-MCM-120	RMH-39-K	M3912CK-7EUN	
74116	GEMH39-MC-120	RMH-39-K	M3912CK-6EUN-F	
87501	GEMH39-MSF-120	RMH-39-K	M3912CK-7EUN	QTP1X39MH/UNV F
63044	GEMH39-MSJ-MV	IMH-39-G	M3912-27CK-5EU	
63045	GEMH39-MSF-MV	IMH-39-E	M3912-27CK-6EU-F	
87531	GEMH70-MSF-120	IMH-70-G	M7012CK-6EUN-F	QTP1X70MH/UNV F
87546	GEMH70-SLJ-MV	IMG-70-G	M7012-27CK-5EU	QTP1X70MH/UNV J
87561	GEMH100-SLJ-MV	IMG-100-A-BLS	M10012-27CK-5EU-F	QTP1X100MH/UNV J
87576	GEMH150-SLJ-MV	IMG-150-H-BLS	M15012-27CK-5EU-J	
HID Electromagnetic Ballasts				
Metal Halide				
63073	GEM50MLTLA3D-5	71A5181-500D	M50MLTLC3M500K	M50/MULTI-KIT
86847	GEM70MLTLA3D-5	71A5280-500D	M70MLTLC3M500K	M70/MULTI-KIT
78517	GEM70TRILC3-5	71A52A2-001D	M70TRILC3M502K	
67337	GEM7048TLA3D-5	NA	M7048TLC3M500K	
86675	GEM100MLTLA3D-5	71A5390-001D	M100MLTLC3M500K	M100/MULTI-KIT
78519	GEM100TRILC3-5	71A53A0-001D	M100TRIL3M502K	
67333	GEM10048TLA3D-5	71A5340-500DT	M10048TLC3M500K	
86718	GEM150MLTLC3D-5	71A5492-500D	M150MLTLC3M500K	M150/MULTI-KIT
78520	GEM150TRILC3-5	71A54A2	M150TRIL3M502K	
86711	GEM15048TLC3D-5	71A5442-500DT	M15048TLC3M500K	
63078	GEM175ML5AA3-5	71A3042-001D	M175ML5AC3M500K	
78521	GEM175TRIAC3-5	71A55A0-0001D	M175TRIAC30502K	
86741	GEM175MLTAA3-5	71A5570-001D	M175MLTAC3M500K	M175/MULTI-KIT
87211	GEM250ML5AC3-5	71A5750-001D	M250ML5AC3M500K	
86741	GEM250MLTAA3-5	71A3542-001D	M250MLTAC3M500K	M1250/MULTI-KIT
78522	GEM250TRIAC4-5	71A56A0-001D	M250TRIAC4M502K	
87212	GEM250ML5AA4-5	71A5750	M250ML5AC4M500K	
72300	GEM400ML5AA4-5	71A6051-001D	M400ML5AC4M500K	
72149	GEM400MLTAA4-5	71A6071-001D	M400MLTAC4M500K	M400/MULTI-KIT
78523	GEM400TRIAC4-5	71A60A1-001D	M400TRIAC4M502K	
63070	GEM40048TAA4-5	71A6042-500DT	M40048TAC4M500K	
78524	GEM1000TRIAC5-5	71A67A2-001	M1000TRIAC5M502K	
63069	GEM100048TAA5-5	71A6542-001	M100048TAC5M500K	M1000/480-KIT
87213	GEM1000ML5AA5-5	71A6552-001	M1000ML5AC5M500K	
86655	GEM1000MLTAA5-5	71A6572-001	M1000MLTAC5M500K	M1000/MULTI-KIT
86693	GEM150048TAC5-5	71A6742-001	M150048TAC5M500K	M1500/480-KIT
86698	GEM1500MLTAC5-5	71A6772-001	M1500MLTAC5M500K	M1500/MULTI-KIT
Pulse Start				
67335	GEP175MLTAA3-5	71A5593-001D	P175MLTAC3M500K	
78525	GEP175TRIAC3-5	71A55A3	P175TRIAC3M502K	
86876	GEP17548TAC3-5	71A5543-500DT	P17548TAC3M500K	
78526	GEP200TRIAC3-5	71A56A2	P200TRIAC3M502k	
67344	GEP250MLTAA4-5	71A5792-001D	P250MLTAC4M500K	M250/MULTI-PS-KIT
78527	GEP250TRIAC4-5	71A57A2	P250TRIAC4M502K	
86926	GEP25048TAC4-5	71A5742-500DT	P25048TAC4M500K	M250/480-PS
86959	GEP320MLTAC4-5	71A5892-001D	P320MLTAC4M500K	M320/MULTI-PS-KIT
78528	GEP320TRIAC4-5	71A59A2	P320TRIAC4M502K	
67342	GEP32048TAA4-5	71A5842-500DT	P32048TAC4M500K	M320/480-PS-KIT
78529	GEP350TRIAC4-5	71A59A3	P350MLTAC4M500K	
67346	GEP350MLTAA4-5	71A5993-001D	P350MLTAC4M500K	
78530	GEP400TRIAC4-5	71A60A2	P400TRIAC4M502K	
67341	GEP40048TAA4-5	71A6042-500DT	P40048TAC4M500K	M400/480-PS-KIT
67347	GEP400MLTAA4-5	71A6092-001D	P400MLTAC4M500K	M400/MULTI-PS-KIT
78531	GEP750TRIAC5-5	71A64F0-T	P750TRIAC5M502K	M750/120/277/347/480-PS-KIT
67343	GEP75048TAA5-5	71A64F2-500DT	P75048TAC5M500K	
67350	GEP750MLTAA5-5	71A64E2-500D	P750MLTAC5M500K	
78532	GEP1000TRIAC5-5	71A65F1-T		M1000/120/277/347/480-PS-KIT
67348	GEP1000MLTAA5-5	71A6593-500	P1000MLTAC5M500K	
67349	GEP1000ML5AA5-5	71A6553-500	P1000ML5AC5M500K	

See page E-1 for warranty information.

Prod Code	Description	Advance P/N	Universal (Vossloh Schwabe)	OSI P/N
HID Electromagnetic Ballasts - Continued				
High Pressure Sodium				
87152	GES50MLTLC3D-5	71A7801-001D	S50MLTLC3M500K	LU50/DUAL-KIT
78533	GES50TRILC3-5			
86587	GES70MLTLC3D-5	71A7971-001D	S70MLTLC3M500K	LU70/MULTI-KIT
78534	GES70TRILC3-5	71A79A1-001D	S70TRILC3M502K	
86456	GES7048TLC3D-5	71A7941-001D	S7048TLC3M500K	
87074	GES100MLTLC3D-5	71A8001-001D	S100MLTLC3M500K	LU100/MULTI-KIT
78535	GES100TRILC3-5	71A80A1-001D	S100TRILC3M502K	
87068	GES10048TLC3D-5		S10048TLC3M500K	LU100/480-KIT
87094	GES150MLTLC3D-5	71A8172-001D	S150MLTLC3M500K	LU150/MULTI-KIT
78536	GES150TRILC3-5	71A81A2-001D	S150TRILC3M502K	
67339	GES15048TLC3D-5	71A8142-001D	S15048TLC3M500K	LU150/480-KIT
87214	GES250ML5AA4-5	71A8251-001D	S250ML5AC4M500K	
78537	GES250TRIAC4-5	71A82A1-001D	S250TRIAC4M502K	
87121	GES250MLTAA4-5	71A8271-001D	S250MLTAC4M500K	LU250/MULTI-KIT
63066	GES400ML5AC4-5	71A8453-001DF	S400ML5AC4M500K	
87164	GES400MLTAA4-5	71A8473-001D	S400MLTAC4M500K	LU400/MULTI-KIT
78539	GES400TRIAC4-5	71A84A3-001D	S400TRIAC4M502K	
87198	GES40048TAA4-5	71A8443-001D	S40048TAC4M500K	LU400/480-KIT
78540	GES1000TRIAC5-5	71A87A3-001	S1000TRIAC5M502K	
67351	GES100048TAA5-5	71A8743-001	S100048TAC5M500K	LU1000/480-KIT
87218	GES1000ML5AA5-5	71A8753-001	S1000ML5AC5M500K	
67352	GES1000MLTAA5-5	71A8773-001	S1000MLTAC5M500K	LU1000/MULTI-KIT
HID Lamp - Ballast Kits				
71701	GEM175ML5AC3-55	77L5570-001D		
71702	GEM250ML5AC3-55	77L5770-001D		
71703	GEM400ML5AC4-55	77L6051-001D		
71704	GEM1000ML5AC4-55	77L6552-001		
71705	GES100MLTLC3D-55	77L8071-001D-MED		
71706	GES250ML5AC4-55	77L8251-001D		
71707	GES400ML5AC4-55	77L8453-001D		
F-Can & Post Mount Metal Halide				
63046	GEMH50MVR-F	72C5181-NP	1120236CTC	
86576	11210277CTC000C	72C5280-NP	11210277CTC	
63047	GEMH70MVR-F	72C5282-NP	11210277CTC	
86578	11210506CTC000C	72C5282-NP	11210506CTC	
63048	GEMH100MVR-F	72C5381-NP	11210239CTC	
63049	GEMH150MVR-F	72C5482-NP	11210539CTC	
63050	GEMH175MVA-F	72C5581-NP	1110245SCTC	
63051	GEMH250MVA-F	72C5782-NP	1110246CTC	
63052	GEMH400MVA-F	72C6082-NP	1111-247SCTC	
80728	1111-247SCTC000I	72C6082-NP	1111-247SCTC	
F-Can & Post Mount HPS				
86605	1233142U000I	71A7907-001DB	1233142U000I	
86596	12210237CTC000I	72C7984-NP	12210237CTC000I	
86606	1233154U000I	71A8107-001DB	1233154U000I	
HID Ignitors				
75440	MH350-1A	LI553-H4-IC		
75441	MH750-1B	LI573-H5-IC		
86606	HPS150-3A	LI551-J4-IC		
86607	HPS400-3A	LI501-H4-IC		
HID CAPACITORS				
75434	GECAP-15/440V-O	7C150P40-R		
75435	GECAP-24/400V-O	7C240P40-R		
75668	GECAP-24/480V-O	MD2409-00		
75669	GECAP-12/280V-O			
75422	GECAP-35/240V-O	7C350P24RA		
75423	GECAP-5/240V-O	7C550P24RA		
75437	GECAP-12/280V-O			

See page E-1 for warranty information.

Discontinued Catalog Products

Prod Code	Description	Suggested Replacement	Prod Code
23671	GE-232-120-N	GE232MAX-G-N	72275
23672	GE-232-277-N	GE-232-MV-N	72275
23674	GE-332-277-N	GE-332-MV-N	74456
23675	GE-432-120-N	GE432MAX-G-N	74463
23676	GE-432-277-N	GE-432-MV-N	74463
23678	GE-259-277-N	GE259MV-N	74469
23680	GE-132-120-N	GE132MAX-G-N	72269
23681	GE-132-277-N	GE-132-MV-N	72269
23939	GE132MAX-N-DIY	NA	
23940	GE232MAX-N-DIY	NA	
23942	GE432MAX-N-DIY	NA	
24162	GE-132-277-N-84T	GE-132-MV-N-42T	72240
24164	GE-232-277-N-84T	GE-232-MV-N-42T	72276
24166	GE-332-277-N-84T	GE-332-MV-N-42T	74457
24168	GE-432-277-N-84T	GE-432-MV-N-42T	74464
24170	GE-259-277-N-84T	GE-259MV-N-42T	74470
24774	GE340RS-MV-N-DIY	NA	
29621	GE-232-120-PS-N	GE-232-MVPS-N	96714
29622	GE-232-277-PS-N	GE-232-MVPS-N	96714
29623	GE-332-120-PS-N	GE-232-MVPS-N	96714
29624	GE-332-277-PS-N	GE-332-MVPS-N	96715
29625	GE-432-120-PS-N	GE-432-MVPS-N	96716
29627	GE-432-277-PS-N	GE-432-MVPS-N	96716
29630	GE-232-120PS-N-T	GE-232-MVPS-N	96714
29632	GE-232-277PS-N-T	GE-232-MVPS-N	96714
29633	GE-332-120PS-N-T	GE-332-MVPS-N	96715
29634	GE-332-277PS-N-T	GE-332-MVPS-N	96715
29635	GE-432-120PS-N-T	GE-432-MVPS-N	96716
29650	GE-432-277PS-N-T	GE-432-MVPS-N	96716
29656	GE-332-MV-PS-H-T	GE332-MVPS-H-84TS	72753
29665	GE-232-MVPS-XL-T	GE-232-MVPS-XL	29671
29666	GE-332-MVPS-XL-T	GE-332-MVPS-XL	29672
73192	GE454MVPS90-G	GE454MVPS90-E-S	94131
29717	GE454MVPSN1-B	GE454MVPS90-G	73192
30187	GE-286-HO-MV-N-P	GE-286-HO-MV-N-P	30176
30189	GE-132-MV-N	GE-132-MV-N	72269
30191	GE-232-MV-N	GE-232-MV-N	72275
30219	GE432MV-H	GE432MV-H	78629
30247	GE-232-MV-L	GE-232-MV-L	72272
30268	GE-132-MV-N-42T	GE-132-MV-N-42T	72240
30269	GE-232-MV-N-42T	GE-232-MV-N-42T	72276
30303	GE-432-MV-H-42T	GE-432-MV-N-42T	74464
30308	GE-232-MV-L-42T	GE-232-MV-L-42T	72274
31052	GE232MAX-N-42T	GE232MAX-N-42T	72267
31053	GE332MAX-N-42T	GE332MAX-N-42T	71721
31054	GE432MAX-N-42T	GE432MAX-N-42T	71729
31055	GE332MAX-L-42T	GE332MAX-L-42T	71718
42670	1110-247SC-TC	NA	
42692	P350277RCEM500K	GEP350MLTAC4-5	86984
47532	B132PUNVHP-A	GE-132-MV-N	72269
99655	GE228MVPS-A	GE228MVPS-MC	68993
47536	B228PUNV-C0G1C	GE228MVPS-A	99655
47546	GE232MAX-L-42T	GE232MAX-L-42T	72274
47547	GE432MAX-L-42T	GE432MAX-L-42T	71726
47549	GE332MAX-H-42T	GE332MAX-H-42T	71715
47550	GE432MAX-H-42T	GE432MAX-H-42T	71724
49706	GE132MAX-L/ULTRA	GE132MAX-L/ULTRA	72258
49707	GE232MAX-L/ULTRA	GE232MAX-L/ULTRA	72262
49708	GE332MAX-L/ULTRA	GE332MAX-L/ULTRA	71717
49709	GE432MAX-L/ULTRA	GE432MAX-L/ULTRA	71725
49771	GE132MAX-N/ULTRA	GE132MAX-N/ULTRA	72259
49772	GE232MAX-N/ULTRA	GE232MAX-N/ULTRA	72262
49773	GE332MAX-N/ULTRA	GE332MAX-N/ULTRA	71719

Prod Code	Description	Suggested Replacement	Prod Code
49774	GE432MAX-N/ULTRA	GE432MAX-N/ULTRA	71727
49775	GE232MAX-H/ULTRA	GE232MAXP-H/ULTRA	73190
49776	GE332MAX-H/ULTRA	GE332MAX-H/ULTRA	71714
49777	GE432MAX-H/ULTRA	GE432MAX-H/ULTRA	71723
71281	GE232MAX-N/AMP	GE232MAX-N/AMP	72264
71424	GE332-MVPS-HSL84	GE332-MVPS-H-84TS	72753
71425	GE432-MVPS-HSL42	GE432MVPS-H-42T	74477
71426	GE432MAX-HSL84T	GE432MAX-H-42T	71724
71502	GE632MAXH90-S60T	GE632MAX90-S60	71497
71714	GE332MAX-H/ULTRA	GE332MAX-H/ULTRA	78619
71715	GE332MAX-H-48T	GE332MAX-H-48T	78620
71717	GE332MAX-L/ULTRA	GE332MAX-L/ULTRA	78621
71718	GE332MAX-L-48T	GE332MAX-L-48T	78622
71719	GE332MAX-N/ULTRA	GE332MAX-N/ULTRA	78623
71721	GE332MAX-N-48T	GE332MAX-N-48T	78624
71725	GE432MAX-L/ULTRA	GE432MAX-L/ULTRA	78625
71726	GE432MAX-L-48T	GE432MAX-L-48T	78626
71727	GE432MAX-N/ULTRA	GE432MAX-N/ULTRA	78627
71729	GE432MAX-N-42T	GE432MAX-N	78628
71732	GE632MAXH90-V60T	GE632MAX90-V60	71731
72260	GE132MAX-N-DIY	NA	
80136	B332I347HP	GE332-N-347	74105
80148	B259I120RHH	NA	
80149	B259I277RHH	NA	
80162	B295SR120HP	GE296HO-MV-N	75671
80163	B295SR277HP	GE296HO-MV-N	75671
80277	B332I347HPL 347	NA	
80353	B132R120V5	GE132MVPS-N-V03	75379
80355	B232SR120V5	GE232MVPS-N-V03	75380
80356	B232SR277V5	GE232MVPS-N-V03	75380
80357	B332SR120V5	GE332MVPS-N-V03	75381
80358	B332SR277V5	GE332MVPS-N-V03	75381
80362	B232SR277S50	GE232MAX90-S60	73233
80630	480XLHTCP-CON 120	GE296HO-MV-N	75671
80631	487XLHTCP-CON	GE296HO-MV-N	75671
80633	487SLHTCP-CON	GE296HO-MV-N	75671
80635	822BRTCP-CON	GE-260-IS-MV-N	74474
80637	420LTCP-CON	GE-240RS-MV-N	74472
80640	447LRVLHTCP-CON	GE-240RS-MV-N	74472
80644	GEM230RS120DIY	GE-240RS-MV-N DIY	74473
80664	493B2	NA	
80669	C213UNVBE-IP	GEC213-MVPS-SE	71429
80671	C213UNVBES-IP	GEC213-MVPS-BES	71428
80672	C213UNVSE-IP	GEC213-MVPS-SE	71429
80673	C218UNVBEIP	GEC218-MVPS-SE	71433
80677	C218UNVBES-IP	GEC218-MVPS-BES	71432
80679	C218UNVSE-IP	GEC218-MVPS-SE	71433
80680	C240SI120RH-IP	GEC240MAX-A	71435
80681	C240SI277RH-IP	GEC240MAX-A	71435
80683	C240PUNVHP-B-IP	GEC240MVPS-A	75950
80685	C2642UNVBE-IP	GEC226-MVPS-SE	71444
80687	C2642UNVBES-IP	GEC226-MVPS-BES	71443
80689	C2642UNVSE-IP	GEC226-MVPS-SE	71444
80690	C340SI120RH-IP	GEC340MAX-A	71436
80691	C340SI277RH-IP	GEC340MAX-A	71436
80824	480XLHTCP-DIY	GE296HO-MV-N	75671
86071	200CSP-IP	GE-240RS-MV-N	74472
86073	200H2-IP	GE-240RS-MV-N	74472
86078	202BTCP-IP	GE-240RS-MV-N	74472
86080	202SBTCP-IP	GE-240RS-MV-N	74472
86085	213TCP-IP	GE-260-IS-MV-N	74474
86101	412LSLHTCP-IP	GE-240RS-MV-N	74472
86105	413CTCP-IP	GE-240RS-MV-N	74472

Prod Code	Description	Suggested Replacement	Prod Code
86110	420LTCP-IP	GE-240RS-MV-N	74472
86123	443LSLHTCP	GE-240RS-MV-N	74472
86124	GEM240RS277IP	GE-240RS-MV-N	74472
86132	445RSWSTCP-IP	GE240RS120	97498
86137	446LSLHTCP	GE-240RS-MV-N	74472
86139	GEM240RS120IP	GE-240RS-MV-N	74472
86144	447LRTCP-IP	GE-240RS-MV-N	74472
86158	458LSLHTCP-IP	GE-240RS-MV-N	74472
86164	GEM296HORS120IP	GE296HO-MV-N	75671
86167	480XLHTCP-IP	GE296HO-MV-N	75671
86171	GEM296HORS277IP	GE296HO-MV-N	75671
86173	487XLHTCP-IP	GE296HO-MV-N	75671
86176	490XLHTCP-IP	GE296HO-MV-N	75671
86185	502ATCP-IP	GE232MVPS-N-VO3	75380
86206	532BRTCP-IP	GE-260-IS-MV-N	74474
86208	537LTCP-IP	GE-240RS-MV-N	74472
86222	546BTCP-IP	GE140RS120	75672
86231	548H2-IP	NA	
86240	554LTCP-IP	NA	
86243	562LTCP-IP	NA	
86245	564LTCP-IP	GE-240RS-MV-N	74472
86251	573LTCP-IP	GE-240RS-MV-N	74472
86253	588LTCP-IP	GE-240RS-MV-N	74472
86264	627LHTCP-IP	GE296HO-MV-N	75671
86287	697LTCP-IP	GE-240RS-MV-N	74472
86341	GEM240RS220IP	NA	
86351	798XLHTCP-IP	GE296HO-MV-N	75671
86359	806SLHTCP	GE-260-IS-MV-N	74474
86360	GEM296IS120IP	GE-260-IS-MV-N	74474
86372	GEM196IS120IP	GE-260-IS-MV-N	74474
86378	827SLHTCP	GE-260-IS-MV-N	74474
86379	GEM296IS277IP	GE-260-IS-MV-N	74474
86381	GEM196IS277IP	GE-260-IS-MV-N	74474
86396	881BRTCP-IP	GE-260-IS-MV-N	74474
86402	930KTCP-IP	NA	
86411	937KTCP-IP	NA	
86430	957STCP-IP	NA	
86432	960VLHTCP-IP	NA	
86519	H100MLTAC3M500K	GEM100MLTLC3D-5	86675
86527	H175MLTAC3M500K	GEM175MLTAC3-5	86741
86542	H400MLTAC4M500K	GEM400MLTAA4-5	72149
86624	2BMB1000C	NA	
86808	M400ML5AC4M500K	GEM400ML5AA4-5	72300
86814	M400MLTAC4M500K	GEM400MLTAA4-5	72149
86968	P320TRIAC4M502K	GEP320MLTAC4-5	86959
87175	S400MLTAC5M500K	GES400ML5AC4-5	87215
87206	S40048TAC5M500K	GES40048TAC4-5	87198
87217	S400ML5AC5M500K	GES400ML5AC4-5	87215
87621	GE-454-MV-PS-NL	GE454MVPS90-G	73192
87634	GEM1CF579PH277	NA	
72279	GE254MVPS-D	GE254MVPS-D-1	33957
87666	GE-254-MV-PS-NLB	GE254MVPS-D	72279
87700	GEM2CF24PH277	NA	
88918	USB-0218-16-IP	NA	
88931	USB-0816-14-IP	GESB-620-24-IP	72104
88934	USB-1632-24-IP	GESB-2040-46-IP	72107
88936	USB-1024-14-IP	GESB-1224-24-IP	72105
89707	GEM240RS120DIY72	GE240RS120-DIY	97499
89708	GEM296IS120DIY48	GE-260-IS-MV-N-DIY	74475
89709	GEM140RS120DIY	GE140RS120-DIY	72110
89710	GEM240HRS120DIY	GE240RS120-DIY	97499
89714	GEM140HRS120DIY	GE140RS120-DIY	72110
89716	445RSWSTCP-DIY	GE240RS120-DIY	72110

Prod Code	Description	Suggested Replacement	Prod Code
89723	213TCP-DIY	GE-260-IS-MV-N-DIY	74475
89724	458LSLHTCP-DIY	GE240RS-MV-N-DIY	74473
89725	532BRTCP-DIY	GE-260-IS-MV-N-DIY	74475
89726	487SLHTCP-DIY	GE296HO-MV-N-DIY	72109
90019	GE259MAX-N/CTR	NA	
96717	GE232-MVPS-N-42T	GE-232-MVPS-N	96714
96718	GE332-MVPS-N-42T	GE-332-MVPS-N	96715
96719	GE432-MVPS-N-42T	GE-432-MVPS-N	96716
97656	GE232MAX-N/CTR	GE232MAX-N/CTR	72265
97657	GE332MAX-N/CTR	GE332MAX-N/CTR	71720
97658	GE432MAX-N/CTR	GE432MAX-N/CTR	71728
97709	GE-232MV-N-DIY	GE-232MV-N-DIY	72277
97713	GE332MAX-HSL84T	GE332MAX-HSL84T	72752

Product Warranty

GE
Lighting

Light your world with a brand you can trust—GE.

GE has been a leader in innovative lighting technologies for over 100 years. Our name on the label is virtually synonymous with dependable, efficient, high-quality products—and that is why we are totally confident in the system performance and reliability of our lamps and ballasts. Also it is why we are willing to back them with a limited warranty that provides excellent coverage against defects in materials and workmanship.

If your GE lamp or ballast, when installed and used properly, fails during its warranty period because of defects in materials or workmanship, our warranties provide for purchase price credits or replacement. Of course, every lamp, ballast and system is different and warranty details vary, so check the individual warranty for your product at www.gelighting.com/warranty.

System Limited Warranty
(See the GE Lighting System and Ballast Limited Warranty at **www.gelighting.com/warranty** for full details and specific lamp cycle requirements.)

GE Lamps Operating on GE Ballasts

		Lamp Warranty[2]		Electronic Ballast Warranty[3, 5]	Electromagnetic Ballast Warranty[5]
Compact Fluorescent Lamp[4]		**When Operated on GE Programmed Rapid-Start Ballasts**	**When Operated on GE Instant-Start Ballasts**		
Double Biax®: 13-, 18-, 26-watt: "DBX" (4-pin base types only)		2 years	–	5 years	–
Triple Biax®: 13-, 18-, 26-, 32-, 42-watt "TBX"		2 years	–	5 years	–
High-Output Biax®: 57-watt and 70-watt "QBX"		2 years	–	5 years	–
High Lumen Biax® 27 W and 39 W		1 year	–	5 years	–
High Lumen Biax® 55 W[6]		2 years	–	5 years	–
High Lumen Biax® Watt-Miser® 25 W (F40/25BX)		3 years	2.5 years	5 years	–
High Lumen Biax® 40 W (F40/30BX)		2 years	1 year	5 years	–
Linear Fluorescent Lamp[1,4]		**When Operated on GE Programmed Rapid-Start Ballasts**	**When Operated on GE Instant-Start Ballasts**	**Electronic Ballast Warranty[3, 5]**	**Electromagnetic Ballast Warranty[5]**
F17T8/XL, F25T8/XL, F32T8 (SP, SPP & SPX)		3 years	2.5 years	5 years	2 years
F17T8/XL/WM, F25T8/XL/WM		3 years	3 years	5 years	2 years
F28T8/XL/SPP, F32T8/25W/SPP, F32T8/XL (SP & SPX)		4 years	3 years	5 years	2 years
F32T8/XL/HL		4 years	4 years	5 years	2 years
F28T8/XL/SPX, F32T8/SXL, F32T8/25W/SPX		5 years	4 years	5 years	2 years
F28T8/SXL, F32T8/25W/SXL		7 years	5 years	5 years	2 years
F96T8, F96T8/HO		–	2 years	5 years	–
F96T8/XL (SP, SPP & SPX); F96T8/XL/WM; F96T8/XL/WMP; F96T8/54W/SPP; F96T8/49W (SPP & SPX)		–	3 years	5 years	–
F28WT5/HL		3 years	–	5 years	–
F14T5/WM, F21T5/WM, F28T5/WM, F35T5/WM		3.5 years	–	5 years	–
F14T5HE, F21T5HE, F28T5HE, F35T5HE, F54T5/47W, F24T5HO, F39T5HO, F54T5HO, F80T5HO, F54T5/WM		4 years	–	5 years	–
F54T5/XL		5 years	–	5 years	–
HID High Watt Lamps[4]		**When Operated on GE Ballasts**		**Electronic Ballast Warranty[3, 5]**	**Electromagnetic Ballast Warranty[5]**
CMH® ConstantColor® SPXX: 250-, 320-, 350-, 400-watt		1 year	–	5 years	2 years
PulseArc®: 250-, 320-, 350-, 400-watt		1 year	–	5 years	2 years
HID Low Watt Lamps[4]	**Wattage/Type**	**When Operated on GE Ballasts**		**Electronic Ballast Warranty[3, 5]**	**Electromagnetic Ballast Warranty**
CMH® PAR	PAR20, PAR30L, PAR38, PAR64	6 months	–	5 years	–
CMH® MR16	All	6 months	–	5 years	–
CMH® GU6.5	All	6 months	–	5 years	–
CMH® G8.5	20 W	6 months	–	5 years	–
	39 W, 70 W	1 year	–	5 years	–
CMH® G12	20 W, 150 W	6 months	–	5 years	–
	39 W, 70 W	1 year	–	5 years	–
CMH® Double-ended	All	1 year	–	5 years	–
CMH® Elliptical	70 W	1 year	–	5 years	–
	150 W	9 months	–	5 years	–
	100 W	6 months	–	5 years	–

Visit www.gelighting.com/warranty for all warranty provisions and details
[1] Includes GE covRguard® lamps
[2] After date of purchase
[3] Contingent upon maximum rated case temperature; 36 or 60 months as specified on www.gelighting.com
[4] Linear fluorescent and compact fluorescent operating at 4,000 hours per year, high intensity discharge at 5,000 hours per year.
[5] From date of manufacture
[6] Applies to F55BX lamps rated at 20,000 hours life

Ballast Remedy: GE will, at its option, either (1) provide a credit to Purchaser equal to the current price GE charges Purchaser for the ballast, or (2) provide a free replacement ballast to Purchaser. GE reserves and has the right to examine failed lamps and/or ballasts to determine the cause of failure and patterns of usage.

Index

Index (cont.)

Index (cont.)

Index (cont.)

Index (cont.)

Index (cont.)

Index (cont.)

Index (cont.)

Index (cont.)

Index (cont.)

Index (cont.)

Index (cont.)

Introduction

This latest edition of the GE product catalog has been updated to help you more easily select the GE lighting products that best meet your needs.

Technical data in this catalog (life, lumens, wattage, etc.) are nominal values, subject to manufacturer's tolerances. All technical data in this catalog is based on laboratory tests conducted under controlled conditions. Performance of individual lamps may vary. Because of frequent design improvements, the values listed may not be current ratings. The data and suggested applications should not be taken as representations or warranties as to the suitability of any product for a particular application. Technical bulletins may be issued from time to time if changes in ratings occur prior to the next catalog printing.

Technical Support

1-800-GE LAMPS
1-888-GE BALLAST
(1-888-432-2552)

For the most up-to-date, comprehensive product information, visit the GE Lighting website at
www.gelighting.com.

imagination at work

GE
Lighting

Leading the way to environmental excellence

Learn how these top 3 environmental impacts affect your business

Today, with so much environmental data in the market place, it's hard to differentiate which imperatives positively affect your business. For instance, a longer lamp life may be environmentally preferable compared to shorter life lamps.

GE is focused on today's most pressing environmental challenges, such as energy efficiency, longer life products and lamp recycling.

Energy Efficiency

Increasing the energy efficiency of the lighting system has a large effect on reducing the overall environmental impact and reduces energy bills.

Reduction of greenhouse gas emissions and energy use is important to business. GE offers you energy efficient systems to reduce your energy consumption and subsequently your GHG emissions.

To learn how to reduce energy costs by using GE products, go to **www.gelighting.com/environmental**

Long Life

Increasing lamp life and therefore reducing the number of lamps made, transported and recycled, also has a large effect on reducing environmental impact.

To view GE's large range of long life and energy efficient products, go to **www.gelighting.com** and click on "Products."

Recycling

GE recommends recycling fluorescent lamps at the end of life. Recycling recovers lamp materials, including mercury, for reuse.

To learn more about GE's recycling resources, go to **www.gelighting.com/environmental**

imagination at work

Ballasts

Ecomagination℠ is GE's commitment to create products that help our customers improve their environmental and operating performance. GE's UltraStart® T5 and T8 programmed start and GE UltraMax® Instant Start ballasts are among the highest energy-efficient ballasts available and contribute to significant reductions in energy consumption and the curbing of greenhouse gas emissions.

Conformance Directive

The restriction of Hazardous Substances (RoHS) is a European directive that restricts six hazardous materials in consumer products:

- Lead
- Mercury
- Cadmium
- Hexavalent chromium
- PBB flame retardants
- PBDE flame retardants

GE electronic ballast options meet the material restriction requirements of RoHS relating to those substances.

UltraMax® Professional Series

Introducing our premium, highest efficiency Instant Start ballasts. The P series is comprised of new micro cans that are the smallest in the industry and allow for lightweight retrofits and compact design. The new P series will effectively remote start energy efficient lamps up to 18 feet and have improved UL Type CC anti-arcing protection and double the surge protection for the high ballast factor category.

UltraStart® Electronic Ballast

UltraStart® ballasts are a family of high-efficiency GE Program Start (see page 10-2) electronic linear fluorescent ballasts designed to optimize GE's T8 and T5 Ultra lamps in frequently switched applications. Instant Start ballasts provide approximately 10,000 starts before 50% of lamp failure. UltraStart® provides greater than 100,000 starts. UltraStart® have the equivalent energy savings and convenience of instant start ballasts but with the long lamp life of a programmed start ballast. UltraStart® T8 L, N and H ballasts exceed 90% efficiency and the NEMA Premium® ballast program minimum efficiency requirements.

UltraMax® General Series

Offering more than 90 percent energy efficiency, the UltraMax® G series electronic ballast is designed for all-purpose, long-burn operations. Focusing on the needs of our customers, we've constructed these high-efficiency ballasts to offer cutting-edge technologies for low temperature starting and anti-striation control. With an ambient temperature rating of 104°F, the UltraMax® G series is ideal for general applications.

Introduction

UltraMax® T8 Electronic Ballast

UltraStart® T8 Electronic Ballast

Compact Fluorescent Lamp (CFL)

CFLs are single-ended T4 and T5 lamps that are bent to form a compact shape. Screw-in CFLs have an integral ballast with a screw base for easy replacement of incandescent lamps. GE offers multi-voltage, multi-lamp and multi-entry ballasts for a wide range of CFL plug-in lamps. Multivolt ProLine® CFL ballasts are designed for plug-in lamps so that a ballast will survive over the useful life of approximately 3-to-4 lamp lives.

Multivolt ProLine® CFL Ballast

Electromagnetic Ballast (Magnetic Ballast)

Primarily used for T12 lamps. These ballasts operate lamps at a less efficient 60Hz and typically have efficiencies of 70-80%. Most ballasts consist of a core and coil transformer assembly. Today, magnetic ballasts for 4 foot and 8 foot lamps are typically used only for replacement purposes and are restricted by EPACT to be sold, even in replacement applications, starting in 2009.

Sign Ballast (Magnetic Ballast)

Designed to operate T12 HO Lamps at 120 volts in cold and damp conditions in sign cabinets.

Sign Ballast

GE eHID, Electronic High Intensity Discharge Ballast (eHID)

Electronic HID significantly improves the performance of HID lighting. GE's UltraMax® eHID ballast operates pulse start and ceramic metal halide lamps.

GE High Intensity Discharge Ballast (HID)

HID magnetic ballasts consist of robust core and coil designs that meet or exceed minimum ANSI requirements. These ballasts are typically sold as distributor replacement kits which are pre-wired with a capacitor, ignitor (if applicable) and all necessary mounting hardware and instructions. Each wattage is typically offered in quad (MLT-120/208/240/277 volt), 5-tap (ML5-120/208/240/277/480 volt) or 480 volt (48T) options.

HID Electromagnetic Ballast Kit

UltraMax® eHID Ballast

GE Lighting & Electrical Institute

- World renowned training and education center at historic Nela Park in Cleveland, Ohio
- Impressive full-scale lighting demonstrations plus comprehensive electrical distribution solution center
- Variety of scheduled courses offered throughout the year, taught by experienced industry professionals

Call **1-800-255-1200**
or visit **www.gelighting.com/institute**

E-tools from the Institute:

- Live webcasts to sharpen your product and application knowledge
- Value*Light – GE's award-winning cost of light analysis program
- The Lighting Toolkit – a collection of seven simple estimating tools including a Simple Energy Calculator, Lighting Layout Estimator, and the Watts Per Square Foot Estimator
- The Lighting Assistant – a set of over 30 user-friendly tools and additional resources
- Light Beams – a comprehensive beam rendering and design tool for GE's PAR, R, MR and other directional lamps
- Plus training on online lighting layout tools and audit tools.

Learning Central...

the GE portal for all of your training and education needs!

Use Learning Central to register for Institute courses, enroll in online courses, schedule a customized onsite conference, track your progress, and more!

Visit **www.gelearningcentral.com**

Notes

Quick reference lamp to ballast selection guide

Lamp Type	Voltage	Fluorescent Ballast Type	Ballast Product Code	Ballast Description	Fluorescent Ballast Long Description
Fluorescent Lamps					
CFQ13W/2P	120	Preheat	87533	GEM1CF13PH120	1- CFT/Q13W/GX23 Pre Heat 120 (4111H2P)
CFQ13W/4P	120-277	Programmed start	63089	GEC213-MVPS-3W	2 or 1- CFQ13WG24q 120-277V ProLine® PS 3-Way Kit
	120-277	Programmed start	63091	GEC213-MVPS-BES	2 or 1- CFQ13WG24q Bottom Exit with Studs 120-277V ProLine® PS
	120-277	Programmed start	63092	GEC213-MVPS-SE	2 or 1- CFQ13WG24q Side Exit 120-277V ProLine® PS
CFQ18W/4P	120-277	Programmed start	63089	GEC213-MVPS-3W	2 or 1- CFQ13WG24q 120-277V ProLine® PS 3-Way Kit
	120-277	Programmed start	63091	GEC213-MVPS-BES	2 or 1- CFQ13WG24q Bottom Exit with Studs 120-277V ProLine® PS
	120-277	Programmed start	63092	GEC213-MVPS-SE	2 or 1- CFQ13WG24q Side Exit 120-277V ProLine® PS
	120-277	Programmed start	63093	GEC218-MVPS-3W	2 or 1- CFQ18WG24q 120-277V ProLine® PS 3 Way Kit
	120-277	Programmed start	63094	GEC218-MVPS-BES	2 or 1- CFQ18WG24q Bottom Exit with Studs 120-277V ProLine® PS
	120-277	Programmed start	63096	GEC218-MVPS-SE	2 or 1- CFQ18WG24q Side Exit 120-277V ProLine® PS
CFQ26W/4P	120-277	Programmed start	63093	GEC218-MVPS-3W	2 or 1- CFQ18WG24q 120-277V ProLine® PS 3 Way Kit
	120-277	Programmed start	63094	GEC218-MVPS-BES	2 or 1- CFQ18WG24q Bottom Exit with Studs 120-277V ProLine® PS
	120-277	Programmed start	63096	GEC218-MVPS-SE	2 or 1- CFQ18WG24q Side Exit 120-277V ProLine® PS
	120-277	Programmed start	63097	GEC226-MVPS-3W	2-CFQ26W FT24 or 1-42W CFTR32 3 Way Mounting Kit 120-277V ProLine® PS
	120-277	Programmed start	63101	GEC226-MVPS-BES	2-CFQ26W FT24 or 1-42W CFTR32 Bottom Exit w Studs 120-277V ProLine® PS
	120-277	Programmed start	63099	GEC226-MVPS-SE	2-CFQ26W FT24 or 1-42W CFTR32 Side Exit 120-277V ProLine® PS
CFS10W/4P	120-277	Programmed start	63089	GEC213-MVPS-3W	2 or 1- CFQ13WG24q 120-277V ProLine® PS 3-Way Kit
	120-277	Programmed start	63091	GEC213-MVPS-BES	2 or 1- CFQ13WG24q Bottom Exit with Studs 120-277V ProLine® PS
	120-277	Programmed start	63092	GEC213-MVPS-SE	2 or 1- CFQ13WG24q Side Exit 120-277V ProLine® PS
CFS16W/4P	120-277	Programmed start	63089	GEC213-MVPS-3W	2 or 1- CFQ13WG24q 120-277V ProLine® PS 3-Way Kit
	120-277	Programmed start	63091	GEC213-MVPS-BES	2 or 1- CFQ13WG24q Bottom Exit with Studs 120-277V ProLine® PS
	120-277	Programmed start	63092	GEC213-MVPS-SE	2 or 1- CFQ13WG24q Side Exit 120-277V ProLine® PS
	120-277	Programmed start	63093	GEC218-MVPS-3W	2 or 1- CFQ18WG24q 120-277V ProLine® PS 3 Way Kit
	120-277	Programmed start	63094	GEC218-MVPS-BES	2 or 1- CFQ18WG24q Bottom Exit with Studs 120-277V ProLine® PS
	120-277	Programmed start	63096	GEC218-MVPS-SE	2 or 1- CFQ18WG24q Side Exit 120-277V ProLine® PS
CFS21W/4P	120-277	Programmed start	63093	GEC218-MVPS-3W	2 or 1- CFQ18WG24q 120-277V ProLine® PS 3 Way Kit
	120-277	Programmed start	63094	GEC218-MVPS-BES	2 or 1- CFQ18WG24q Bottom Exit with Studs 120-277V ProLine® PS
	120-277	Programmed start	63096	GEC218-MVPS-SE	2 or 1- CFQ18WG24q Side Exit 120-277V ProLine® PS
	120-277	Programmed start	63097	GEC226-MVPS-3W	2-CFQ26W FT24 or 1-42W CFTR32 3 Way Mounting Kit 120-277V ProLine® PS
	120-277	Programmed start	63094	GEC226-MVPS-BES	2-CFQ26W FT24 or 1-42W CFTR32 Bottom Exit w Studs 120-277V ProLine® PS
	120-277	Programmed start	63099	GEC226-MVPS-SE	2-CFQ26W FT24 or 1-42W CFTR32 Side Exit 120-277V ProLine® PS
CFS28W/4P	120-277	Programmed start	63093	GEC218-MVPS-3W	2 or 1- CFQ18WG24q 120-277V ProLine® PS 3 Way Kit
	120-277	Programmed start	63094	GEC218-MVPS-BES	2 or 1- CFQ18WG24q Bottom Exit with Studs 120-277V ProLine® PS
	120-277	Programmed start	63096	GEC218-MVPS-SE	2 or 1- CFQ18WG24q Side Exit 120-277V ProLine® PS
CFT13W/2P	120	Preheat	87533	GEM1CF13PH120	1- CFT/Q13W/GX23 Pre Heat 120 (4111H2P)
CFTR13W/4P	120-277	Programmed start	63089	GEC213-MVPS-3W	2 or 1- CFQ13WG24q 120-277V ProLine® PS 3-Way Kit
	120-277	Programmed start	63091	GEC213-MVPS-BES	2 or 1- CFQ13WG24q Bottom Exit with Studs 120-277V ProLine® PS
	120-277	Programmed start	63092	GEC213-MVPS-SE	2 or 1- CFQ13WG24q Side Exit 120-277V ProLine® PS
CFTR18W/4P	120-277	Programmed start	63089	GEC213-MVPS-3W	2 or 1- CFQ13WG24q 120-277V ProLine® PS 3-Way Kit
	120-277	Programmed start	63091	GEC213-MVPS-BES	2 or 1- CFQ13WG24q Bottom Exit with Studs 120-277V ProLine® PS
	120-277	Programmed start	63092	GEC213-MVPS-SE	2 or 1- CFQ13WG24q Side Exit 120-277V ProLine® PS
	120-277	Programmed start	63093	GEC218-MVPS-3W	2 or 1- CFQ18WG24q 120-277V ProLine® PS 3 Way Kit
	120-277	Programmed start	63094	GEC218-MVPS-BES	2 or 1- CFQ18WG24q Bottom Exit with Studs 120-277V ProLine® PS
	120-277	Programmed start	63096	GEC218-MVPS-SE	2 or 1- CFQ18WG24q Side Exit 120-277V ProLine® PS
CFTR26W/4P	120-277	Programmed start	63093	GEC218-MVPS-3W	2 or 1- CFQ18WG24q 120-277V ProLine® PS 3 Way Kit
	120-277	Programmed start	63094	GEC218-MVPS-BES	2 or 1- CFQ18WG24q Bottom Exit with Studs 120-277V ProLine® PS
	120-277	Programmed start	63096	GEC218-MVPS-SE	2 or 1- CFQ18WG24q Side Exit 120-277V ProLine® PS
	120-277	Programmed start	63097	GEC226-MVPS-3W	2-CFQ26W FT24 or 1-42W CFTR32 3 Way Mounting Kit 120-277V ProLine® PS
	120-277	Programmed start	63094	GEC226-MVPS-BES	2-CFQ26W FT24 or 1-42W CFTR32 Bottom Exit w Studs 120-277V ProLine® PS
	120-277	Programmed start	63099	GEC226-MVPS-SE	2-CFQ26W FT24 or 1-42W CFTR32 Side Exit 120-277V ProLine® PS
CFTR32W/4P	120-277	Programmed start	63097	GEC226-MVPS-3W	2-CFQ26W FT24 or 1-42W CFTR32 3 Way Mounting Kit 120-277V ProLine® PS
	120-277	Programmed start	63094	GEC226-MVPS-BES	2-CFQ26W FT24 or 1-42W CFTR32 Bottom Exit w Studs 120-277V ProLine® PS
	120-277	Programmed start	63099	GEC226-MVPS-SE	2-CFQ26W FT24 or 1-42W CFTR32 Side Exit 120-277V ProLine® PS
CFTR42W/4P	120-277	Programmed start	63097	GEC226-MVPS-3W	2-CFQ26W FT24 or 1-42W CFTR32 3 Way Mounting Kit 120-277V ProLine® PS
	120-277	Programmed start	63094	GEC226-MVPS-BES	2-CFQ26W FT24 or 1-42W CFTR32 Bottom Exit w Studs 120-277V ProLine® PS
	120-277	Programmed start	63099	GEC226-MVPS-SE	2-CFQ26W FT24 or 1-42W CFTR32 Side Exit 120-277V ProLine® PS
F12T9	120	Rapid start	97498	GE240RS120	2 F40 or F34T12 Rapid Start 120V "N" BF ProLine® T12
F14T5/HE	120-277	Programmed start	68993	GE228MVPS-MC	2- F28T5 PRS UNV 50/60 Hz
	120-277	Programmed start	68993	GE228MVPS-MC	2 or 1 - F14-F35HE 120 to 277 UltraStart® PS Normal Light .95 BF A Can
	120-277	Programmed start	68994	GE228MVPS-H-MC	2 or 1 - F14-F35HE 120 to 277 UltraStart® PS High Light 1.15 BF A Can
F14T5/WM	120-277	Programmed start	68993	GE228MVPS-MC	2 or 1 - F14-F35HE 120 to 277 UltraStart® PS Normal Light .95 BF A Can
	120-277	Programmed start	68994	GE228MVPS-H-MC	2 or 1 - F14-F35HE 120 to 277 UltraStart® PS High Light 1.15 BF A Can
	120	Instant start	97782	GE232-120-RES	2 or 1- F32T8 120V Normal Light BF Energy Star Resi Grade Electronic Ballast
	120	Instant start	23673	GE-332-120-N	3 or 2- F32T8 120V "N".87 BF
	120	Instant start	97783	GE432-120-RES	3 or 4- F32T8 120V Normal Light BF Energy Star Resi Grade Electronic Ballast
	347	Instant start	74101	GE132MAX-G-N-347	1- F32T8 347V "N" .87 BF UltraMax®
	347	Instant start	74109	GE232MAXP347-H	2 or 1- F32T8 347V "H" 1.18 BF UltraMax®
F17T8	347	Instant start	74096	GE232MAXP347-L	2 or 1- F32T8 347V "L" .77 BF UltraMax®
	347	Instant start	74093	GE232MAXP347-N	2 or 1- F32T8 347V "N" .87 BF UltraMax®
	347	Instant start	74103	GE232MAX-G-N-347	2 or 1- F32T8 347V "N" .87 BF UltraMax®

See page E-1 for warranty information.

Quick reference lamp to ballast selection guide (cont.)

Lamp Type	Voltage	Fluorescent Ballast Type	Ballast Product Code	Ballast Description	Fluorescent Ballast Long Description
Fluorescent Lamps (continued)					
F17T8 (cont)	347	Instant start	74111	GE332MAXP347-H	3 - F32T8 347V "H" 1.18 BF UltraMax®
	347	Instant start	74097	GE332MAXP347-L	3 or 2- F32T8 347V "L" .77 BF UltraMax®
	347	Instant start	74094	GE332MAXP347-N	3 or 2- F32T8 347V "N" .87 BF UltraMax®
	347	Instant start	74105	GE332MAX-G-N-347	3 or 2- F32T8 347V "N" .87 BF UltraMax®
	347	Instant start	74113	GE432MAXP347-H	4 - F32T8 347V "H" 1.18 BF UltraMax®
	347	Instant start	74098	GE432MAXP347-L	4 or 3- F32T8 347V "L" .77 BF UltraMax®
	347	Instant start	74095	GE432MAXP347-N	4 or 3- F32T8 347V "N" .87 BF UltraMax®
	347	Instant start	74107	GE432MAX-G-N-347	4 or 3- F32T8 347V "N" .87 BF UltraMax®
	120-277	Instant start	72258	GE132MAXP-L/ULTRA	1- F32T8 120 to 277 "L" .77BF UltraMax®
	120-277	Instant start	72259	GE132MAXP-N/ULTRA	1- F32T8 120 to 277"N" .87 BF UltraMax®
	120-277	Instant start	72269	GE132MAX-G-N	1- F32T8 120 to 277 "N".87 BF UltraMax®
	120-277	Programmed start	75954	GE132-MVPS-H	1 F32T8 120V-277V High Light 1.18 BF<10% THD UltraStart®
	120-277	Programmed start	75952	GE132-MVPS-L	1 F32T8 120V-277V Low Watts .71 BF <10% THD UltraStart®
	120-277	Programmed start	75953	GE132-MVPS-N	1 F32T8 120V-277V Normal Light .88 BF<10% THD UltraStart®
	120-277	Instant start	73233	GE232MAXP90-S60	2 or 1 - F32T8 120 to 277 "H" 1.18 BF UltraMax® 100/60% step dim
	120-277	Instant start	73234	GE232MAXP90-V60	2 or 1 - F32T8 120 to 277 "H" 1.18 BF UltraMax® 0-10V 100-60% dim
	120-277	Instant start	72262	GE232MAXP-L/ULTRA	2 or 1- F32T8 120 to 277 "L" .77 BF UltraMax®
	120-277	Instant start	72266	GE232MAXP-N/ULTRA	2 or 1- F32T8 120 to 277 "N" .87 BF UltraMax®
	120-277	Instant start	71421	GE232MAXP-N+	2 or 1- F32T8 120 to 277 "N+" 1.0 BF UltraMax®
	120-277	Instant start	74803	GE232MAX-G-H	2 or 1- F32T8 120 to 277 "H" 1.18 BF UltraMax®
	120-277	Instant start	72273	GE232MAX-G-L	2 or 1- F32T8 120 to 277 "L".77 BF UltraMax®
	120-277	Instant start	72275	GE232MAX-G-N	2 or 1- F32T8 120 to 277 "N".87 BF UltraMax®
	120-277	Programmed start	29675	GE-232-MVPS-H	2 F32T8 120V-277V High Light 1.15 BF UltraStart®
	120-277	Programmed start	96720	GE232-MVPS-L	2 or 1 F32T8 120V-277V Low Watt .71 BF UltraStart® Program Start
	120-277	Programmed start	96714	GE232-MVPS-N	2 or 1 F32T8 120V-277V Normal Light .88 BF UltraStart®
	120-277	Programmed start	29671	GE-232-MVPS-XL	2 or 1 F32T8 120V-277V Ultra Low Watt .60 BF UltraStart®
	120-277	Instant start	73231	GE332MAXP90-S60	3 - F32T8 120 to 277 "H" 1.18 BF UltraMax® 100/60% step dim
	120-277	Instant start	73232	GE332MAXP90-V60	3 - F32T8 120 to 277 "H" 1.18 BF UltraMax® 0-10V 100-60% dim
	120-277	Instant start	71714	GE332MAXP-H/ULTRA	3 or 2- F32T8 120 to 277 "H" 1.18 BF UltraMax®
	120-277	Instant start	71717	GE332MAXP-L/ULTRA	3 or 2- F32T8 120 to 277 "L" .77 BF UltraMax®
	120-277	Instant start	71719	GE332MAXP-N/ULTRA	3 or 2- F32T8 120 to 277 "N" .87 BF UltraMax®
	120-277	Instant start	71422	GE332MAXP-N+	3 or 2- F32T8 120 to 277 "N+" 1.0 BF UltraMax®
	120-277	Instant start	74461	GE332MAX-G-H	3 or 2- F32T8 120 to 277 "H" 1.18 BF UltraMax®
	120-277	Instant start	74459	GE332MAX-G-L	3 or 2- F32T8 120 to 277 UltraMax®
	120-277	Instant start	74456	GE332MAX-G-N	3 or 2- F32T8 120 to 277 "N".87 BF UltraMax®
	120-277	Programmed start	29676	GE-332-MVPS-H	3 F32T8 120V-277V High Light 1.15 BF UltraStart®
	120-277	Programmed start	96721	GE332-MVPS-L	3 F32T8 120V-277V Low Watt .71 BF UltraStart®
	120-277	Programmed start	96715	GE332-MVPS-N	3 F32T8 120V-277V Normal Light .88 BF UltraStart®
	120-277	Programmed start	29672	GE-332-MVPS-XL	3 F32T8 120V-277V Ultra Low Watt .60 BF UltraStart®
	120-277	Instant start	73229	GE432MAXP90-S60	4 - F32T8 120 to 277 "H" 1.18 BF UltraMax® 100/60% step dim
	120-277	Instant start	73230	GE432MAXP90-V60	4 - F32T8 120 to 277 "H" 1.18 BF UltraMax® 0-10V 100-60% dim
	120-277	Instant start	71723	GE432MAXP-H/ULTRA	4 or 3- F32T8 120 to 277 "H" 1.18 BF UltraMax®
	120-277	Instant start	71725	GE432MAXP-L/ULTRA	4 or 3- F32T8 120 to 277 "L" .77 BF UltraMax®
	120-277	Instant start	71727	GE432MAXP-N/ULTRA	4 or 3- F32T8 120 to 277 "N" .87 BF UltraMax®
	120-277	Instant start	71423	GE432MAXP-N+	4 or 3- F32T8 120 to 277 "N+" 1.0 BF UltraMax®
	120-277	Instant start	30219	GE432MAX-G-H	4 or 3- F32T8 120 to 277 "H" 1.15 BF UltraMax®
	120-277	Instant start	74466	GE432MAX-G-L	4 or 3- F32T8 120 to 277 "L" .77 BF UltraMax®
	120-277	Instant start	74463	GE432MAX-G-N	4 or 3- F32T8 120 to 277 "N".87 BF UltraMax®
	120-277	Programmed start	74476	GE432-MVPS-H	4 F32T8 120V-277V High Light 1.18 BF UltraStart®
	120-277	Programmed start	71832	GE432-MVPS-L	4 F32T8 120V-277V Low Watt .71 BF UltraStart®
	120-277	Programmed start	96716	GE432-MVPS-N	4 F32T8 120V-277V Normal Light .88 BF UltraStart®
	120-277	Instant start	74117	GE632MAXP-H90	6 or 5 - F32T8 120 to 277 "H" 1.18 BF UltraMax®
	120-277	Instant start	71497	GE632MAXP-H90-S60	6 or 5 - F32T8 120 to 277 "H" 1.18 BF UltraMax® 95% efficiency, 1-wire powerline 100/60% step dim
	120-277	Instant start	71731	GE632MAXP-H90-V60	6 or 5 - F32T8 120 to 277 "H" 1.18 BF UltraMax® 95% efficiency, 2-wire 0-10V 100-60% continuous dim
F17T8/WM	347	Instant start	74109	GE232MAXP347-H	2 or 1- F32T8 347V "H" 1.18 BF UltraMax®
	347	Instant start	74096	GE232MAXP347-L	2 or 1- F32T8 347V "L" .77 BF UltraMax®
	347	Instant start	74093	GE232MAXP347-N	2 or 1- F32T8 347V "N" .87 BF UltraMax®
	347	Instant start	74103	GE232MAX-G-N-347	2 or 1- F32T8 347V "N" .87 BF UltraMax®
	347	Instant start	74111	GE332MAXP347-H	3 - F32T8 347V "H" 1.18 BF UltraMax®
	347	Instant start	74097	GE332MAXP347-L	3 or 2- F32T8 347V "L" .77 BF UltraMax®
	347	Instant start	74094	GE332MAXP347-N	3 or 2- F32T8 347V "N" .87 BF UltraMax®
	347	Instant start	74105	GE332MAX-G-N-347	3 or 2- F32T8 347V "N" .87 BF UltraMax®
	347	Instant start	74113	GE432MAXP347-H	4 - F32T8 347V "H" 1.18 BF UltraMax®
	347	Instant start	74098	GE432MAXP347-L	4 or 3- F32T8 347V "L" .77 BF UltraMax®
	347	Instant start	74095	GE432MAXP347-N	4 or 3- F32T8 347V "N" .87 BF UltraMax®
	347	Instant start	74107	GE432MAX-G-N-347	4 or 3- F32T8 347V "N" .87 BF UltraMax®
	120-277	Programmed start	75954	GE132-MVPS-H	1 F32T8 120V-277V High Light 1.18 BF<10% THD UltraStart®
	120-277	Programmed start	75952	GE132-MVPS-L	1 F32T8 120V-277V Low Watts .71 BF <10% THD UltraStart®
	120-277	Programmed start	75953	GE132-MVPS-N	1 F32T8 120V-277V Normal Light .88 BF<10% THD UltraStart®
F20T12	120-277	Rapid start	74472	GE240RS-MV-N	2 or 1- F40 or F34T12 Rapid Start 120 to 277 "N" BF

See page E-1 for warranty information.

Lamp Type	Voltage	Fluorescent Ballast Type	Ballast Product Code	Ballast Description	Fluorescent Ballast Long Description
Fluorescent Lamps (continued)					
F20T12 (cont)	120-277	Rapid start	74472	GE240RS-MV-N	2 or 1- F40 or F34T12 Rapid Start 120 to 277 "N" BF
F21T5/HE	120-277	Programmed start	68993	GE228MVPS-MC	2- F28T5 PRS UNV 50/60 Hz
	120-277	Programmed start	68993	GE228MVPS-MC	2 or 1 - F14-F35HE 120 to 277 UltraStart® PS Normal Light .95 BF A Can
	120-277	Programmed start	68994	GE228MVPS-H-MC	2 or 1 - F14-F35HE 120 to 277 UltraStart® PS High Light 1.15 BF A Can
F21T5/WM	120-277	Programmed start	68993	GE228MVPS-MC	2 or 1 - F14-F35HE 120 to 277 UltraStart® PS Normal Light .95 BF A Can
	120-277	Programmed start	68994	GE228MVPS-H-MC	2 or 1 - F14-F35HE 120 to 277 UltraStart® PS High Light 1.15 BF A Can
F24T5/HO	120-277	Programmed start	68976	GE-224MVPS-N	2- F24T5HO PRS UNV 50/60 Hz
	120-277	Programmed start	47540	B239PUNV-DOG1C	2- F39T5HO PRS UNV 50/60 Hz
F25T12	120	Rapid start	97498	GE240RS120	2 F40 or F34T12 Rapid Start 120V "N" BF ProLine® T12
	347	Instant start	74101	GE132MAX-G-N-347	1- F32T8 347V "N" .87 BF UltraMax®
	347	Instant start	74109	GE232MAXP347-H	2 or 1- F32T8 347V "H" 1.18 BF UltraMax®
	347	Instant start	74096	GE232MAXP347-L	2 or 1- F32T8 347V "L" .77 BF UltraMax®
	347	Instant start	74093	GE232MAXP347-N	2 or 1- F32T8 347V "N" .87 BF UltraMax®
	347	Instant start	74103	GE232MAX-G-N-347	2 or 1- F32T8 347V "N" .87 BF UltraMax®
	347	Instant start	74111	GE332MAXP347-H	3 - F32T8 347V "H" 1.18 BF UltraMax®
	347	Instant start	74097	GE332MAXP347-L	3 or 2- F32T8 347V "L" .77 BF UltraMax®
	347	Instant start	74094	GE332MAXP347-N	3 or 2- F32T8 347V "N" .87 BF UltraMax®
	347	Instant start	74105	GE332MAX-G-N-347	3 or 2- F32T8 347V "N" .87 BF UltraMax®
	347	Instant start	74113	GE432MAXP347-H	4 - F32T8 347V "H" 1.18 BF UltraMax®
	347	Instant start	74098	GE432MAXP347-L	4 or 3- F32T8 347V "L" .77 BF UltraMax®
	347	Instant start	74095	GE432MAXP347-N	4 or 3- F32T8 347V "N" .87 BF UltraMax®
	347	Instant start	74107	GE432MAX-G-N-347	4 or 3- F32T8 347V "N" .87 BF UltraMax®
	120-277	Instant start	72258	GE132MAXP-L/ULTRA	1- F32T8 120 to 277 "L" .77BF UltraMax®
	120-277	Instant start	72259	GE132MAXP-N/ULTRA	1- F32T8 120 to 277"N" .87 BF UltraMax®
	120-277	Programmed start	75954	GE132-MVPS-H	1 F32T8 120V-277V High Light 1.18 BF<10% THD UltraStart®
	120-277	Programmed start	75952	GE132-MVPS-L	1 F32T8 120V-277V Low Watts .71 BF <10% THD UltraStart®
	120-277	Programmed start	75953	GE132-MVPS-N	1 F32T8 120V-277V Normal Light .88 BF<10% THD UltraStart®
	120-277	Instant start	72262	GE232MAXP-L/ULTRA	2 or 1- F32T8 120 to 277 "L" .77 BF UltraMax®
	120-277	Instant start	72266	GE232MAXP-N/ULTRA	2 or 1- F32T8 120 to 277 "N" .87 BF UltraMax®
	120-277	Instant start	71421	GE232MAXP-N+	2 or 1- F32T8 120 to 277 "N+" 1.0 BF UltraMax®
	120-277	Instant start	78619	GE332MAXP-H/ULTRA	3 or 2- F32T8 120 to 277 "H" 1.18 BF UltraMax®
	120-277	Instant start	78621	GE332MAXP-L/ULTRA	3 or 2- F32T8 120 to 277 "L" .77 BF UltraMax®
	120-277	Instant start	78623	GE332MAXP-N/ULTRA	3 or 2- F32T8 120 to 277 "N" .87 BF UltraMax®
	120-277	Instant start	71422	GE332MAXP-N+	3 or 2- F32T8 120 to 277 "N+" 1.0 BF UltraMax®
	120-277	Instant start	71723	GE432MAXP-H/ULTRA	4 or 3- F32T8 120 to 277 "H" 1.18 BF UltraMax®
	120-277	Instant start	78625	GE432MAXP-L/ULTRA	4 or 3- F32T8 120 to 277 "L" .77 BF UltraMax®
	120-277	Instant start	78627	GE432MAXP-N/ULTRA	4 or 3- F32T8 120 to 277 "N" .87 BF UltraMax®
	120-277	Instant start	71423	GE432MAXP-N+	4 or 3- F32T8 120 to 277 "N+" 1.0 BF UltraMax®
F25T8	120	Instant start	97782	GE232-120-RES	2 or 1- F32T8 120V Normal Light BF Energy Star Resi Grade Electronic Ballast
	120	Instant start	97783	GE432-120-RES	3 or 4- F32T8 120V Normal Light BF Energy Star Resi Grade Electronic Ballast
	347	Instant start	74101	GE132MAX-G-N-347	1- F32T8 347V "N" .87 BF UltraMax®
	347	Instant start	74109	GE232MAXP347-H	2 or 1- F32T8 347V "H" 1.18 BF UltraMax®
	347	Instant start	74096	GE232MAXP347-L	2 or 1- F32T8 347V "L" .77 BF UltraMax®
	347	Instant start	74093	GE232MAXP347-N	2 or 1- F32T8 347V "N" .87 BF UltraMax®
	347	Instant start	74103	GE232MAX-G-N-347	2 or 1- F32T8 347V "N" .87 BF UltraMax®
	347	Instant start	74103	GE232MAX-G-N-347	2 or 1- F32T8 347V "N" .87 BF UltraMax®
	347	Instant start	74111	GE332MAXP347-H	3 - F32T8 347V "H" 1.18 BF UltraMax®
	347	Instant start	74111	GE332MAXP347-H	3 - F32T8 347V "H" 1.18 BF UltraMax®
	347	Instant start	74097	GE332MAXP347-L	3 or 2- F32T8 347V "L" .77 BF UltraMax®
	347	Instant start	74097	GE332MAXP347-L	3 or 2- F32T8 347V "L" .77 BF UltraMax®
	347	Instant start	74094	GE332MAXP347-N	3 or 2- F32T8 347V "N" .87 BF UltraMax®
	347	Instant start	74094	GE332MAXP347-N	3 or 2- F32T8 347V "N" .87 BF UltraMax®
	347	Instant start	74105	GE332MAX-G-N-347	3 or 2- F32T8 347V "N" .87 BF UltraMax®
	347	Instant start	74105	GE332MAX-G-N-347	3 or 2- F32T8 347V "N" .87 BF UltraMax®
	347	Instant start	74113	GE432MAXP347-H	4 - F32T8 347V "H" 1.18 BF UltraMax®
	347	Instant start	74098	GE432MAXP347-L	4 or 3- F32T8 347V "L" .77 BF UltraMax®
	347	Instant start	74098	GE432MAXP347-L	4 or 3- F32T8 347V "L" .77 BF UltraMax®
	347	Instant start	74095	GE432MAXP347-N	4 or 3- F32T8 347V "N" .87 BF UltraMax®
	347	Instant start	74095	GE432MAXP347-N	4 or 3- F32T8 347V "N" .87 BF UltraMax®
	347	Instant start	74107	GE432MAX-G-N-347	4 or 3- F32T8 347V "N" .87 BF UltraMax®
	347	Instant start	74107	GE432MAX-G-N-347	4 or 3- F32T8 347V "N" .87 BF UltraMax®
	120-277	Instant start	72258	GE132MAXP-L/ULTRA	1- F32T8 120 to 277 "L" .77BF UltraMax®
	120-277	Instant start	72259	GE132MAXP-N/ULTRA	1- F32T8 120 to 277"N" .87 BF UltraMax®
	120-277	Instant start	72269	GE-132MAX-G-N	1- F32T8 120 to 277 "N".87 BF UltraMax®
	120-277	Programmed start	75954	GE132-MVPS-H	1 F32T8 120V-277V High Light 1.18 BF<10% THD UltraStart®
	120-277	Programmed start	75952	GE132-MVPS-L	1 F32T8 120V-277V Low Watts .71 BF <10% THD UltraStart®
	120-277	Programmed start	75953	GE132-MVPS-N	1 F32T8 120V-277V Normal Light .88 BF<10% THD UltraStart®
	120-277	Instant start	72262	GE232MAXP-L/ULTRA	2 or 1- F32T8 120 to 277 "L" .77 BF UltraMax®
	120-277	Instant start	72266	GE232MAXP-N/ULTRA	2 or 1- F32T8 120 to 277 "N" .87 BF UltraMax®

Quick reference lamp to ballast selection guide (cont.)

Lamp Type	Voltage	Fluorescent Ballast Type	Ballast Product Code	Ballast Description	Fluorescent Ballast Long Description
Fluorescent Lamps (continued)					
F25T8 (cont)	120-277	Instant start	71421	GE232MAXP-N+	2 or 1- F32T8 120 to 277 "N+" 1.0 BF UltraMax®
	120-277	Instant start	74803	GE232MAX-G-H	2 or 1- F32T8 120 to 277 "H" 1.18 BF UltraMax®
	120-277	Instant start	72273	GE232MAX-G-L	2 or 1- F32T8 120 to 277 "L".77 BF UltraMax®
	120-277	Instant start	72275	GE232MAX-G-N	2 or 1- F32T8 120 to 277 "N".87 BF UltraMax®
	120-277	Programmed start	29675	GE-232-MVPS-H	2 F32T8 120V-277V High Light 1.15 BF UltraStart®
	120-277	Programmed start	96720	GE232-MVPS-L	2 or 1 F32T8 120V-277V Low Watt .71 BF UltraStart® Program Start
	120-277	Programmed start	96714	GE232-MVPS-N	2 or 1 F32T8 120V-277V Normal Light .88 BF UltraStart®
	120-277	Programmed start	96714	GE232-MVPS-N	2 or 1 F32T8 120V-277V Normal Light .88 BF UltraStart®
	120-277	Programmed start	29671	GE-232-MVPS-XL	2 or 1 F32T8 120V-277V Ultra Low Watt .60 BF UltraStart®
	120-277	Instant start	78619	GE332MAXP-H/ULTRA	3 or 2- F32T8 120 to 277 "H" 1.18 BF UltraMax®
	120-277	Instant start	78621	GE332MAXP-L/ULTRA	3 or 2- F32T8 120 to 277 "L" .77 BF UltraMax®
	120-277	Instant start	78623	GE332MAX-N/ULTRA	3 or 2- F32T8 120 to 277 "N" .87 BF UltraMax®
	120-277	Instant start	71422	GE332MAXP-N+	3 or 2- F32T8 120 to 277 "N+" 1.0 BF UltraMax®
	120-277	Instant start	74461	GE332MAX-G-H	3 or 2- F32T8 120 to 277 "H" 1.18 BF UltraMax®
	120-277	Instant start	74459	GE332MAX-G-L	3 or 2- F32T8 120 to 277 "L" .77 BF UltraMax®
	120-277	Instant start	74456	GE332MAX-G-N	3 or 2- F32T8 120 to 277 "N".87 BF UltraMax®
	120-277	Programmed start	29676	GE-332-MVPS-H	3 F32T8 120V-277V High Light 1.15 BF UltraStart®
	120-277	Programmed start	96721	GE332-MVPS-L	3 F32T8 120V-277V Low Watt .71 BF UltraStart®
	120-277	Programmed start	96715	GE332-MVPS-N	3 F32T8 120V-277V Normal Light .88 BF UltraStart®
	120-277	Programmed start	29672	GE-332-MVPS-XL	3 F32T8 120V-277V Ultra Low Watt .60 BF UltraStart®
	120-277	Instant start	71723	GE432MAXP-H/ULTRA	4 or 3- F32T8 120 to 277 "H" 1.18 BF UltraMax®
	120-277	Instant start	78625	GE432MAXP-L/ULTRA	4 or 3- F32T8 120 to 277 "L" .77 BF UltraMax®
	120-277	Instant start	78627	GE432MAXP-N/ULTRA	4 or 3- F32T8 120 to 277 "N" .87 BF UltraMax®
	120-277	Instant start	71423	GE432MAXP-N+	4 or 3- F32T8 120 to 277 "N+" 1.0 BF UltraMax®
	120-277	Instant start	71423	GE432MAXP-N+	4 or 3- F32T8 120 to 277 "N+" 1.0 BF UltraMax®
	120-277	Instant start	67911	GE432MAX-G-H	4 or 3- F32T8 120 to 277 "H" 1.15 BFUltraMax®
	120-277	Instant start	74466	GE432MAX-G-L	4 or 3- F32T8 120 to 277 UltraMax®
	120-277	Instant start	74463	GE432MAX-G-N	4 or 3- F32T8 120 to 277 "N".87 BF UltraMax®
	120-277	Programmed start	74476	GE432-MVPS-H	4 F32T8 120V-277V High Light 1.18 BF UltraStart®
	120-277	Programmed start	71832	GE432-MVPS-L	4 F32T8 120V-277V Low Watt .71 BF UltraStart®
	120-277	Programmed start	96716	GE432-MVPS-N	4 F32T8 120V-277V Normal Light .88 BF UltraStart®
	120-277	Instant start	74117	GE632MAX-H90	6 or 5 - F32T8 120 to 277 "H" 1.18 BF UltraMax®
	120-277	Instant start	71497	GE632MAXP-H90-S60	6 or 5 - F32T8 120 to 277 "H" 1.18 BF UltraMax® 95% efficiency, 1-wire powerline 100/60% step dim
	120-277	Instant start	71731	GE632MAXP-H90-V60	6 or 5 - F32T8 120 to 277 "H" 1.18 BF UltraMax® 95% efficiency, 2-wire 0-10V 100-60% continuous dim
F25T8/WM	347	Instant start	74101	GE132MAX-G-N-347	1- F32T8 347V "N" .87 BF ProLine®
	347	Instant start	74109	GE232MAXP347-H	2 or 1- F32T8 347V "H" 1.18 BF UltraMax®
	347	Instant start	74096	GE232MAXP347-L	2 or 1- F32T8 347V "L" .77 BF UltraMax®
	347	Instant start	74093	GE232MAXP347-N	2 or 1- F32T8 347V "N" .87 BF UltraMax®
	347	Instant start	74103	GE232MAX-G-N-347	2 or 1- F32T8 347V "N" .87 BF UltraMax®
	347	Instant start	74111	GE332MAXP347-H	3 - F32T8 347V "H" 1.18 BF UltraMax®
	347	Instant start	74097	GE332MAXP347-L	3 or 2- F32T8 347V "L" .77 BF UltraMax®
	347	Instant start	74094	GE332MAXP347-N	3 or 2- F32T8 347V "N" .87 BF UltraMax®
	347	Instant start	74105	GE332MAX-G-N-347	3 or 2- F32T8 347V "N" .87 BF UltraMax®
	347	Instant start	74113	GE432MAXP347-H	4 - F32T8 347V "H" 1.18 BF UltraMax®
	347	Instant start	74098	GE432MAXP347-L	4 or 3- F32T8 347V "L" .77 BF UltraMax®
	347	Instant start	74095	GE432MAXP347-N	4 or 3- F32T8 347V "N" .87 BF UltraMax®
	347	Instant start	74107	GE432MAX-G-N-347	4 or 3- F32T8 347V "N" .87 BF UltraMax®
	120-277	Programmed start	75954	GE132-MVPS-H	1 F32T8 120V-277V High Light 1.18 BF<10% THD UltraStart®
	120-277	Programmed start	75952	GE132-MVPS-L	1 F32T8 120V-277V Low Watts .71 BF <10% THD UltraStart®
	120-277	Programmed start	75953	GE132-MVPS-N	1 F32T8 120V-277V Normal Light .88 BF<10% THD UltraStart®
F28T5	120-277	Instant start	75948	GEC140MAX-A	1-FT40W-25W/2G11 Biax®- 120-277V UltraMax® Instant Start
	120-277	Instant start	71435	GEC240MAX-A	2 or 1-FT40W-25W/2G11 Biax®- 120-277V UltraMax® Instant Start
	120-277	Instant start	71436	GEC340MAX-A	3-FT40W-25W/2G11 Biax®- 120-277V UltraMax® Instant Start
F28T5/HE	120-277	Programmed start	68993	GE228MVPS-MC	2- F28T5 PRS UNV 50/60 Hz
	120-277	Programmed start	68993	GE228MVPS-MC	2 or 1 - F14-F35HE 120 to 277 UltraStart® PS Normal Light .95 BF A Can
	120-277	Programmed start	68994	GE228MVPS-MC-H	2 or 1 - F14-F35HE 120 to 277 UltraStart® PS High Light 1.15 BF A Can
F28T5/HL	120-277	Programmed start	68993	GE228MVPS-MC	2 or 1 - F14-F35HE 120 to 277 UltraStart® PS Normal Light .95 BF A Can
	120-277	Programmed start	68994	GE228MVPS-MC-H	2 or 1 - F14-F35HE 120 to 277 UltraStart® PS High Light 1.15 BF A Can
F28T5/WM	120-277	Programmed start	68993	GE228MVPS-MC	2 or 1 - F14-F35HE 120 to 277 UltraStart® PS Normal Light .95 BF A Can
	120-277	Programmed start	68994	GE228MVPS-MC-H	2 or 1 - F14-F35HE 120 to 277 UltraStart® PS High Light 1.15 BF A Can
F28T8	120	Instant start	97782	GE232-120-RES	2 or 1- F32T8 120V Normal Light BF Energy Star Resi Grade Electronic Ballast
	120	Instant start	97783	GE432-120-RES	3 or 4- F32T8 120V Normal Light BF Energy Star Resi Grade Electronic Ballast
	347	Instant start	74101	GE132MAX-G-N-347	1- F32T8 347V "N" .87 BF UltraMax®
	347	Instant start	74109	GE232MAXP347-H	2 or 1- F32T8 347V "H" 1.18 BF UltraMax®
	347	Instant start	74096	GE232MAXP347-L	2 or 1- F32T8 347V "L" .77 BF UltraMax®
	347	Instant start	74093	GE232MAXP347-N	2 or 1- F32T8 347V "N" .87 BF UltraMax®
	347	Instant start	74103	GE232MAX-G-N-347	2 or 1- F32T8 347V "N" .87 BFUltraMax®
	347	Instant start	74111	GE332MAXP347-H	3 - F32T8 347V "H" 1.18 BF UltraMax®
	347	Instant start	74097	GE332MAXP347-L	3 or 2- F32T8 347V "L" .77 BF UltraMax®
	347	Instant start	74094	GE332MAXP347-N	3 or 2- F32T8 347V "N" .87 BF UltraMax®

See page E-1 for warranty information.

Fluorescent Lamps (continued)

Lamp Type	Voltage	Fluorescent Ballast Type	Ballast Product Code	Ballast Description	Fluorescent Ballast Long Description
F28T8 (cont)	347	Instant start	74105	GE332MAX-G-N-347	3 or 2- F32T8 347V "N" .87 BF UltraMax®
	347	Instant start	74113	GE432MAXP347-H	4 - F32T8 347V "H" 1.18 BF UltraMax®
	347	Instant start	74098	GE432MAXP347-L	4 or 3- F32T8 347V "L" .77 BF UltraMax®
	347	Instant start	74095	GE432MAXP347-N	4 or 3- F32T8 347V "N" .87 BF UltraMax®
	347	Instant start	74107	GE432MAX-G-N-347	4 or 3- F32T8 347V "N" .87 BF UltraMax®
	120-277	Instant start	72258	GE132MAXP-L/ULTRA	1- F32T8 120 to 277 "L" .77BF UltraMax®
	120-277	Instant start	72259	GE132MAXP-N/ULTRA	1- F32T8 120 to 277"N" .87 BF UltraMax®
	120-277	Instant start	72269	GE132MAX-G-N	1- F32T8 120 to 277 "N".87 BF UltraMax® F28T8
	120-277	Programmed start	75954	GE132-MVPS-H	1 F32T8 120V-277V High Light 1.18 BF<10% THD UltraStart®
	120-277	Programmed start	75952	GE132-MVPS-L	1 F32T8 120V-277V Low Watts .71 BF <10% THD UltraStart®
	120-277	Programmed start	75953	GE132-MVPS-N	1 F32T8 120V-277V Normal Light .88 BF<10% THD UltraStart®
	120-277	Instant start	73233	GE232MAXP90-S60	2 or 1 - F32T8 120 to 277 "H" 1.18 BF UltraMax® 100/60% step dim
	120-277	Instant start	73234	GE232MAXP90-V60	2 or 1 - F32T8 120 to 277 "H" 1.18 BF UltraMax® 0-10V 100-60% dim
	120-277	Instant start	72262	GE232MAXP-L/ULTRA	2 or 1- F32T8 120 to 277 "L" .77 BF UltraMax®
	120-277	Instant start	72266	GE232MAXP-N/ULTRA	2 or 1- F32T8 120 to 277 "N" .87 BF UltraMax®
	120-277	Instant start	71421	GE232MAXP-N+	2 or 1- F32T8 120 to 277 "N+" 1.0 BF UltraMax®
	120-277	Instant start	74803	GE232MAX-G-H	2 or 1- F32T8 120 to 277 "H" 1.18 BFUltraMax®
	120-277	Instant start	72273	GE-232MAX-G-L	2 or 1- F32T8 120 to 277 "L".77 BF UltraMax®
	120-277	Instant start	72275	GE-232MAX-G-N	2 or 1- F32T8 120 to 277 "N".87 BF UltraMax®
	120-277	Programmed start	29675	GE-232-MVPS-H	2 F32T8 120V-277V High Light 1.15 BF UltraStart®
	120-277	Programmed start	96720	GE232-MVPS-L	2 or 1 F32T8 120V-277V Low Watt .71 BF UltraStart® Program Start
	120-277	Programmed start	29671	GE-232-MVPS-XL	2 or 1 F32T8 120V-277V Ultra Low Watt .60 BF UltraStart®
	120-277	Instant start	73231	GE332MAXP90-S60	3 - F32T8 120 to 277 "H" 1.18 BF UltraMax® 100/60% step dim
	120-277	Instant start	73232	GE332MAXP90-V60	3 - F32T8 120 to 277 "H" 1.18 BF UltraMax® 0-10V 100-60% dim
	120-277	Instant start	71714	GE332MAXP-H/ULTRA	3 or 2- F32T8 120 to 277 "H" 1.18 BF UltraMax®
	120-277	Instant start	78621	GE332MAXP-L/ULTRA	3 or 2- F32T8 120 to 277 "L" .77 BF UltraMax®
	120-277	Instant start	78623	GE332MAXP-N/ULTRA	3 or 2- F32T8 120 to 277 "N" .87 BF UltraMax®
	120-277	Instant start	71422	GE332MAXP-N+	3 or 2- F32T8 120 to 277 "N+" 1.0 BF UltraMax®
	120-277	Instant start	74461	GE332MAX-G-H	3 or 2- F32T8 120 to 277 "H" 1.18 BF UltraMax®
	120-277	Instant start	74459	GE332MAX-G-L	3 or 2- F32T8 120 to 277 "L" .77 BF UltraMax®
	120-277	Instant start	74456	GE332MAX-G-N	3 or 2- F32T8 120 to 277 "N".87 BF UltraMax®
	120-277	Programmed start	29676	GE-332-MVPS-H	3 F32T8 120V-277V High Light 1.15 BF UltraStart®
	120-277	Programmed start	96721	GE332-MVPS-L	3 F32T8 120V-277V Low Watt .71 BF UltraStart®
	120-277	Programmed start	96715	GE332-MVPS-N	3 F32T8 120V-277V Normal Light .88 BF UltraStart®
	120-277	Programmed start	29672	GE-332-MVPS-XL	3 F32T8 120V-277V Ultra Low Watt .60 BF UltraStart®
	120-277	Instant start	73229	GE432MAXP90-S60	4 - F32T8 120 to 277 "H" 1.18 BF UltraMax® 100/60% step dim
	120-277	Instant start	73230	GE432MAXP90-V60	4 - F32T8 120 to 277 "H" 1.18 BF UltraMax® 0-10V 100-60% dim
	120-277	Instant start	71723	GE432MAXP-H/ULTRA	4 or 3- F32T8 120 to 277 "H" 1.18 BF UltraMax®
	120-277	Instant start	78625	GE432MAXP-L/ULTRA	4 or 3- F32T8 120 to 277 "L" .77 BF UltraMax®
	120-277	Instant start	78627	GE432MAXP-N/ULTRA	4 or 3- F32T8 120 to 277 "N" .87 BF UltraMax®
	120-277	Instant start	71423	GE432MAXP-N+	4 or 3- F32T8 120 to 277 "N+" 1.0 BF UltraMax®
	120-277	Instant start	67911	GE432MAX-G-H	4 or 3- F32T8 120 to 277 "H" 1.15 BF UltraMax®
	120-277	Instant start	74466	GE432MAX-G-L	4 or 3- F32T8 120 to 277 "L" .77 BF UltraMax®
	120-277	Instant start	74463	GE432MAX-G-N	4 or 3- F32T8 120 to 277 "N".87 BF UltraMax®
	120-277	Programmed start	74476	GE432-MVPS-H	4 F32T8 120V-277V High Light 1.18 BF UltraStart®
	120-277	Programmed start	71832	GE432-MVPS-L	4 F32T8 120V-277V Low Watt .71 BF UltraStart®
	120-277	Programmed start	96716	GE432-MVPS-N	4 F32T8 120V-277V Normal Light .88 BF UltraStart®
	120-277	Instant start	74117	GE632MAXP-H90	6 or 5 - F32T8 120 to 277 "H" 1.18 BF UltraMax®
	120-277	Instant start	71497	GE632MAXP-H90-S60	6 or 5 - F32T8 120 to 277 "H" 1.18 BF UltraMax® 95% efficiency, 1-wire powerline 100/60% step dim
	120-277	Instant start	71731	GE632MAXP-H90-V60	6 or 5 - F32T8 120 to 277 "H" 1.18 BF UltraMax® 95% efficiency, 2-wire 0-10V 100-60% continuous dim
F30T12	120	Rapid start	75672	GE140RS120	1 F40 or F34T12 Rapid Start Electronic 120V "N" BF
	120	Rapid start	97498	GE240RS120	2 F40 or F34T12 Rapid Start 120V "N" BF ProLine® T12
	120-277	Rapid start	74472	GE240RS-MV-N	2 or 1- F40 or F34T12 Rapid Start 120 to 277 "N" BF
F30T12/WM	120-277	Rapid start	74472	GE240RS-MV-N	2 or 1- F40 or F34T12 Rapid Start 120 to 277 "N" BF
	120-277	Rapid start	24107	GE-240-RS-MV-N	2 or 1- F40 or F34T12 Rapid Start 120 to 277 "N" BF
	120-277	Rapid start	24109	GE-340-RS-MV-N	3 or 2- F40 or F34T12 Rapid Start 120 to 277
F32T8			74119	GETR480/277-250W	Transformer 480 to 277V, <250 Watts(VA), A can
			74120	GETR480/277-375W	Transformer 480 to 277V, <375 Watts (VA), F can
	120	Instant start	97782	GE232-120-RES	2 or 1- F32T8 120V Normal Light BF Energy Star Resi Grade Electronic Ballast
	120	Instant start	23673	GE-332-120-N	3 or 2- F32T8 120V "N".87 BF
	120	Instant start	97783	GE432-120-RES	3 or 4- F32T8 120V Normal Light BF Energy Star Resi Grade Electronic Ballast
	120	Rapid start	87125	GEM232T8RS120	2- F32T8 RS 120V Magnetic Ballast (M232SR120C)
	347	Instant start	74101	GE132MAX-G-N-347	1- F32T8 347V "N" .87 BF ProLine®
	347	Instant start	74109	GE232MAXP347-H	2 or 1- F32T8 347V "H" 1.18 BF UltraMax®
	347	Instant start	74096	GE232MAXP347-L	2 or 1- F32T8 347V "L" .77 BF UltraMax®
	347	Instant start	74093	GE232MAXP347-N	2 or 1- F32T8 347V "N" .87 BF UltraMax®
	347	Instant start	74103	GE232MAX-G-N-347	2 or 1- F32T8 347V "N" .87 BF ProLine®
	347	Instant start	74111	GE332MAXP347-H	3 - F32T8 347V "H" 1.18 BF UltraMax®
	347	Instant start	74097	GE332MAXP347-L	3 or 2- F32T8 347V "L" .77 BF UltraMax®
	347	Instant start	74094	GE332MAXP347-N	3 or 2- F32T8 347V "N" .87 BF UltraMax®

Quick reference lamp to ballast selection guide (cont.)

Lamp Type	Voltage	Fluorescent Ballast Type	Ballast Product Code	Ballast Description	Fluorescent Ballast Long Description
Fluorescent Lamps (continued)					
F32T8 (cont)	347	Instant start	74105	GE332MAX-G-N-347	3 or 2- F32T8 347V "N" .87 BF UltraMax®
	347	Instant start	74113	GE432MAXP347-H	4 - F32T8 347V "H" 1.18 BF UltraMax®
	347	Instant start	74098	GE432MAXP347-L	4 or 3- F32T8 347V "L" .77 BF UltraMax®
	347	Instant start	74095	GE432MAXP347-N	4 or 3- F32T8 347V "N" .87 BF UltraMax®
	347	Instant start	74107	GE432MAX-G-N-347	4 or 3- F32T8 347V "N" .87 BF UltraMax®
	120-277	Instant start	72258	GE132MAXP-L/ULTRA	1- F32T8 120 to 277 "L" .77BF UltraMax®
	120-277	Instant start	72259	GE132MAXP-N/ULTRA	1- F32T8 120 to 277"N" .87 BF UltraMax®
	120-277	Instant start	72269	GE132MAX-G-N	1- F32T8 120 to 277 "N".87 BF UltraMax®
	120-277	Programmed start	75954	GE132-MVPS-H	1 F32T8 120V-277V High Light 1.18 BF<10% THD UltraStart®
	120-277	Programmed start	75952	GE132-MVPS-L	1 F32T8 120V-277V Low Watts .71 BF <10% THD UltraStart®
	120-277	Programmed start	75953	GE132-MVPS-N	1 F32T8 120V-277V Normal Light .88 BF<10% THD UltraStart®
	120-277	Instant start	73233	GE232MAXP90-S60	2 or 1 - F32T8 120 to 277 "H" 1.18 BF UltraMax® 100/60% step dim
	120-277	Instant start	73234	GE232MAXP90-V60	2 or 1 - F32T8 120 to 277 "H" 1.18 BF UltraMax® 0-10V 100-60% dim
	120-277	Instant start	72262	GE232MAXP-L/ULTRA	2 or 1- F32T8 120 to 277 "L" .77 BF UltraMax®
	120-277	Instant start	72266	GE232MAXP-N/ULTRA	2 or 1- F32T8 120 to 277 "N" .87 BF UltraMax®
	120-277	Instant start	71421	GE232MAXP-N+	2 or 1- F32T8 120 to 277 "N+" 1.0 BF UltraMax®
	120-277	Instant start	74803	GE232MAX-G-H	2 or 1- F32T8 120 to 277 "H" 1.18 BF UltraMax®
	120-277	Instant start	72273	GE232MAX-G-L	2 or 1- F32T8 120 to 277 "L".77 BF UltraMax®
	120-277	Instant start	72275	GE232MAX-G-N	2 or 1- F32T8 120 to 277 "N".87 BF UltraMax®
	120-277	Programmed start	96720	GE232-MVPS-L	2 or 1 F32T8 120V-277V Low Watt .71 BF UltraStart® Program Start
	120-277	Programmed start	96714	GE232-MVPS-N	2 or 1 F32T8 120V-277V Normal Light .88 BF UltraStart®
	120-277	Programmed start	29671	GE-232-MVPS-XL	2 or 1 F32T8 120V-277V Ultra Low Watt .60 BF UltraStart®
	120-277	Instant start	73231	GE332MAXP90-S60	3 - F32T8 120 to 277 "H" 1.18 BF UltraMax® 100/60% step dim
	120-277	Instant start	73232	GE332MAXP90-V60	3 - F32T8 120 to 277 "H" 1.18 BF UltraMax® 0-10V 100-60% dim
	120-277	Instant start	78619	GE332MAXP-H/ULTRA	3 or 2- F32T8 120 to 277 "H" 1.18 BF UltraMax®
	120-277	Instant start	78621	GE332MAXP-L/ULTRA	3 or 2- F32T8 120 to 277 "L" .77 BF UltraMax®
	120-277	Instant start	78623	GE332MAXP-N/ULTRA	3 or 2- F32T8 120 to 277 "N" .87 BF UltraMax®
	120-277	Instant start	71422	GE332MAXP-N+	3 or 2- F32T8 120 to 277 "N+" 1.0 BF UltraMax®
	120-277	Instant start	74461	GE332MAX-G-H	3 or 2- F32T8 120 to 277 "H" 1.18 BF
	120-277	Instant start	74459	GE332MAX-G-L	3 or 2- F32T8 120 to 277 "L" .77 BF UltraMax®
	120-277	Instant start	74456	GE332MAX-G-N	3 or 2- F32T8 120 to 277 "N".87 BF
	120-277	Programmed start	29676	GE-332-MVPS-H	3 F32T8 120V-277V High Light 1.15 BF UltraStart®
	120-277	Programmed start	96721	GE332-MVPS-L	3 F32T8 120V-277V Low Watt .71 BF UltraStart®
	120-277	Programmed start	96715	GE332-MVPS-N	3 F32T8 120V-277V Normal Light .88 BF UltraStart®
	120-277	Programmed start	29672	GE-332-MVPS-XL	3 F32T8 120V-277V Ultra Low Watt .60 BF UltraStart®
	120-277	Instant start	73229	GE432MAXP90-S60	4 - F32T8 120 to 277 "H" 1.18 BF UltraMax® 100/60% step dim
	120-277	Instant start	73230	GE432MAXP90-V60	4 - F32T8 120 to 277 "H" 1.18 BF UltraMax® 0-10V 100-60% dim
	120-277	Instant start	71723	GE432MAXP-H/ULTRA	4 or 3- F32T8 120 to 277 "H" 1.18 BF UltraMax®
	120-277	Instant start	78625	GE432MAXP-L/ULTRA	4 or 3- F32T8 120 to 277 "L" .77 BF UltraMax®
	120-277	Instant start	78627	GE432MAXP-N/ULTRA	4 or 3- F32T8 120 to 277 "N" .87 BF UltraMax®
	120-277	Instant start	71423	GE432MAXP-N+	4 or 3- F32T8 120 to 277 "N+" 1.0 BF UltraMax®
	120-277	Instant start	67911	GE432MAX-G-H	4 or 3- F32T8 120 to 277 "H" 1.15 BF UltraMax®
	120-277	Instant start	74466	GE432MAX-G-L	4 or 3- F32T8 120 to 277 UltraMax®
	120-277	Instant start	74463	GE432MAX-G-N	4 or 3- F32T8 120 to 277 "N".87 BF UltraMax®
	120-277	Programmed start	74476	GE432-MVPS-H	4 F32T8 120V-277V High Light 1.18 BF UltraStart®
	120-277	Programmed start	71832	GE432-MVPS-L	4 F32T8 120V-277V Low Watt .71 BF UltraStart®
	120-277	Programmed start	96716	GE432-MVPS-N	4 F32T8 120V-277V Normal Light .88 BF UltraStart®
	120-277	Instant start	74117	GE632MAXP-H90	6 or 5 - F32T8 120 to 277 "H" 1.18 BF UltraMax®
	120-277	Instant start	71497	GE632MAXP-H90-S60	6 or 5 - F32T8 120 to 277 "H" 1.18 BF UltraMax® 95% efficiency, 1-wire powerline 100/60% step dim
	120-277	Instant start	71731	GE632MAXP-H90-V60	6 or 5 - F32T8 120 to 277 "H" 1.18 BF UltraMax® 95% efficiency, 2-wire 0-10V 100-60% continuous dim
	120-277	Instant start	75948	GEC140MAX-A	1-FT40W-25W/2G11 Biax®- 120-277V UltraMax® Instant Start
	120-277	Instant start	71435	GEC240MAX-A	2 or 1-FT40W-25W/2G11 Biax®- 120-277V UltraMax® Instant Start
	120-277	Instant start	71436	GEC340MAX-A	3-FT40W-25W/2G11 Biax®- 120-277V UltraMax® Instant Start
F32T8/25W	347	Instant start	74101	GE132MAX-G-N-347	1- F32T8 347V "N" .87 BF UltraMax®
	347	Instant start	74109	GE232MAXP347-H	2 or 1- F32T8 347V "H" 1.18 BF UltraMax®
	347	Instant start	74096	GE232MAXP347-L	2 or 1- F32T8 347V "L" .77 BF UltraMax®
	347	Instant start	74093	GE232MAXP347-N	2 or 1- F32T8 347V "N" .87 BF UltraMax®
	347	Instant start	74103	GE232MAX-G-N-347	2 or 1- F32T8 347V "N" .87 BF UltraMax®
	347	Instant start	74111	GE332MAXP347-H	3 - F32T8 347V "H" 1.18 BF UltraMax®
	347	Instant start	74097	GE332MAXP347-L	3 or 2- F32T8 347V "L" .77 BF UltraMax®
	347	Instant start	74094	GE332MAXP347-N	3 or 2- F32T8 347V "N" .87 BF UltraMax®
	347	Instant start	74105	GE332MAX-G-N-347	3 or 2- F32T8 347V "N" .87 BF ProLine®
	347	Instant start	74113	GE432MAXP347-H	4 - F32T8 347V "H" 1.18 BF UltraMax®
	347	Instant start	74098	GE432MAXP347-L	4 or 3- F32T8 347V "L" .77 BF UltraMax®
	347	Instant start	74095	GE432MAXP347-N	4 or 3- F32T8 347V "N" .87 BF UltraMax®
	347	Instant start	74107	GE432MAX-G-N-347	4 or 3- F32T8 347V "N" .87 BF UltraMax®
	120-277	Instant start	72258	GE132MAX-L/ULTRA	1- F32T8 120 to 277 "L" .77BF UltraMax®
	120-277	Instant start	72259	GE132MAX-N/ULTRA	1- F32T8 120 to 277"N" .87 BF UltraMax®
	120-277	Instant start	72269	GE132MAX-G-N	1- F32T8 120 to 277 "N".87 BFUltraMax®
	120-277	Programmed start	75954	GE132-MVPS-H	1 F32T8 120V-277V High Light 1.18 BF<10% THD UltraStart®

See page E-1 for warranty information.

Fluorescent Lamps (continued)

Lamp Type	Voltage	Fluorescent Ballast Type	Ballast Product Code	Ballast Description	Fluorescent Ballast Long Description
F32T8/25W (cont)	120-277	Programmed start	75952	GE132-MVPS-L	1 F32T8 120V-277V Low Watts .71 BF <10% THD UltraStart®
	120-277	Programmed start	75953	GE132-MVPS-N	1 F32T8 120V-277V Normal Light .88 BF<10% THD UltraStart®
	120-277	Instant start	73233	GE232MAXP90-S60	2 or 1 - F32T8 120 to 277 "H" 1.18 BF UltraMax® 100/60% step dim
	120-277	Instant start	73234	GE232MAXP90-V60	2 or 1 - F32T8 120 to 277 "H" 1.18 BF UltraMax® 0-10V 100-60% dim
	120-277	Instant start	72262	GE232MAXP-L/ULTRA	2 or 1- F32T8 120 to 277 "L" .77 BF UltraMax®
	120-277	Instant start	72266	GE232MAXP-N/ULTRA	2 or 1- F32T8 120 to 277 "N" .87 BF UltraMax®
	120-277	Instant start	71421	GE232MAXP-N+	2 or 1- F32T8 120 to 277 "N+" 1.0 BF UltraMax®
	120-277	Instant start	74803	GE232MAX-G-H	2 or 1- F32T8 120 to 277 "H" 1.18 BF UltraMax®
	120-277	Instant start	72273	GE232MAX-G-L	2 or 1- F32T8 120 to 277 "L".77 BF UltraMax®
	120-277	Instant start	72275	GE232MAX-G-N	2 or 1- F32T8 120 to 277 "N".87 BF UltraMax®
	120-277	Programmed start	29675	GE-232-MVPS-H	2 F32T8 120V-277V High Light 1.15 BF UltraStart®
	120-277	Programmed start	96720	GE232-MVPS-L	2 or 1 F32T8 120V-277V Low Watt .71 BF UltraStart® Program Start
	120-277	Programmed start	96714	GE232-MVPS-N	2 or 1 F32T8 120V-277V Normal Light .88 BF UltraStart®
	120-277	Programmed start	29671	GE-232-MVPS-XL	2 or 1 F32T8 120V-277V Ultra Low Watt .60 BF UltraStart®
	120-277	Instant start	73231	GE332MAXP90-S60	3 - F32T8 120 to 277 "H" 1.18 BF UltraMax® 100/60% step dim
	120-277	Instant start	73232	GE332MAXP90-V60	3 - F32T8 120 to 277 "H" 1.18 BF UltraMax® 0-10V 100-60% dim
	120-277	Instant start	78619	GE332MAXP-H/ULTRA	3 or 2- F32T8 120 to 277 "H" 1.18 BF UltraMax®
	120-277	Instant start	78621	GE332MAXP-L/ULTRA	3 or 2- F32T8 120 to 277 "L" .77 BF UltraMax®
	120-277	Instant start	78623	GE332MAX-N/ULTRA	3 or 2- F32T8 120 to 277 "N" .87 BF UltraMax®
	120-277	Instant start	71422	GE332MAXP-N+	3 or 2- F32T8 120 to 277 "N+" 1.0 BF UltraMax®
	120-277	Instant start	74461	GE332MAX-G-H	3 or 2- F32T8 120 to 277 "H" 1.18 BF UltraMax®
	120-277	Instant start	74459	GE332MAX-G-L	3 or 2- F32T8 120 to 277 "L" .77 BF UltraMax®
	120-277	Instant start	74456	GE332MAX-G-N	3 or 2- F32T8 120 to 277 "N".87 BF UltraMax®
	120-277	Programmed start	29676	GE-332-MVPS-H	3 F32T8 120V-277V High Light 1.15 BF UltraStart®
	120-277	Programmed start	96721	GE332-MVPS-L	3 F32T8 120V-277V Low Watt .71 BF UltraStart®
	120-277	Programmed start	96715	GE332-MVPS-N	3 F32T8 120V-277V Normal Light .88 BF UltraStart®
	120-277	Programmed start	29672	GE-332-MVPS-XL	3 F32T8 120V-277V Ultra Low Watt .60 BF UltraStart®
	120-277	Instant start	73229	GE432MAXP90-S60	4 - F32T8 120 to 277 "H" 1.18 BF UltraMax® 100/60% step dim
	120-277	Instant start	73230	GE432MAXP90-V60	4 - F32T8 120 to 277 "H" 1.18 BF UltraMax® 0-10V 100-60% dim
	120-277	Instant start	71723	GE432MAXP-H/ULTRA	4 or 3- F32T8 120 to 277 "H" 1.18 BF UltraMax®
	120-277	Instant start	71725	GE432MAXP-L/ULTRA	4 or 3- F32T8 120 to 277 "L" .77 BF UltraMax®
	120-277	Instant start	71727	GE432MAXP-N/ULTRA	4 or 3- F32T8 120 to 277 "N" .87 BF UltraMax®
	120-277	Instant start	71423	GE432MAXP-N+	4 or 3- F32T8 120 to 277 "N+" 1.0 BF UltraMax®
	120-277	Instant start	67911	GE432MAX-G-H	4 or 3- F32T8 120 to 277 "H" 1.15 BF UltraMax®
	120-277	Instant start	74466	GE432MAX-G-L	4 or 3- F32T8 120 to 277 UltraMax®
	120-277	Instant start	74463	GE432MAX-G-N	4 or 3- F32T8 120 to 277 "N".87 BF UltraMax®
	120-277	Programmed start	74476	GE432-MVPS-H	4 F32T8 120V-277V High Light 1.18 BF UltraStart®
	120-277	Programmed start	71832	GE432-MVPS-L	4 F32T8 120V-277V Low Watt .71 BF UltraStart®
	120-277	Programmed start	96716	GE432-MVPS-N	4 F32T8 120V-277V Normal Light .88 BF UltraStart®
	120-277	Instant start	74117	GE632MAXP-H90	6 or 5 - F32T8 120 to 277 "H" 1.18 BF UltraMax®
	120-277	Instant start	71497	GE632MAXP-H90-S60	6 or 5 - F32T8 120 to 277 "H" 1.18 BF UltraMax® 95% efficiency, 1-wire powerline 100/60% step dim
	120-277	Instant start	71731	GE632MAXP-H90-V60	6 or 5 - F32T8 120 to 277 "H" 1.18 BF UltraMax® 95% efficiency, 2-wire 0-10V 100-60% continuous dim
F34T12	120	Rapid start	72110	GE140RS120	1 F40 or F34T12 Rapid Start Electronic 120V "N" BF
	120	Rapid start	97498	GE240RS120	2 F40 or F34T12 Rapid Start 120V "N" BF ProLine® T12
	120-277	Rapid start	74472	GE240RS-MV-N	2 or 1- F40 or F34T12 Rapid Start 120 to 277 "N" BF
F35T5/HE	120-277	Programmed start	68993	GE228MVPS-MC	2- F28T5 PRS UNV 50/60 Hz
	120-277	Programmed start	68993	GE228MVPS-MC	2 or 1 - F14-F35HE 120 to 277 UltraStart® PS Normal Light .95 BF A Can
F35T5/WM	120-277	Programmed start	68993	GE228MVPS-MC	2 or 1 - F14-F35HE 120 to 277 UltraStart® PS Normal Light .95 BF A Can
F39T5/HO	120-277	Programmed start	68976	GE224MVPS-N	1- F39T5HO PRS UNV 50/60 Hz
	120-277	Programmed start	47540	B239PUNV-DOG1C	2- F39T5HO PRS UNV 50/60 Hz
F40/25BX	120-277	Instant start	75948	GEC140MAX-A	1-FT40W-25W/2G11 Biax®- 120-277V UltraMax® Instant Start
	120-277	Instant start	71435	GEC240MAX-A	2 or 1-FT40W-25W/2G11 Biax®- 120-277V UltraMax® Instant Start
	120-277	Instant start	71436	GEC340MAX-A	3-FT40W-25W/2G11 Biax®- 120-277V UltraMax® Instant Start
F40/28BX	120-277	Instant start	75948	GEC140MAX-A	1-FT40W-25W/2G11 Biax®- 120-277V UltraMax® Instant Start
	120-277	Instant start	71435	GEC240MAX-A	2 or 1-FT40W-25W/2G11 Biax®- 120-277V UltraMax® Instant Start
	120-277	Instant start	71436	GEC340MAX-A	3-FT40W-25W/2G11 Biax®- 120-277V UltraMax® Instant Start
F40/30BX	120-277	Instant start	75948	GEC140MAX-A	1-FT40W-25W/2G11 Biax®- 120-277V UltraMax® Instant Start
	120-277	Instant start	71435	GEC240MAX-A	2 or 1-FT40W-25W/2G11 Biax®- 120-277V UltraMax® Instant Start
	120-277	Programmed start	71437	GEC240MVPS-A	2 or 1-FT40W/2G11 Biax®- 120-277V UltraStart® Programmed Start
	120-277	Instant start	71436	GEC340MAX-A	3-FT40W-25W/2G11 Biax®- 120-277V UltraMax® Instant Start
F40T10	120-277	Rapid start	74472	GE240RS-MV-N	2 or 1- F40 or F34T12 Rapid Start 120 to 277 "N" BF
F40T12	120	Rapid start	72110	GE140RS120	1 F40 or F34T12 Rapid Start Electronic 120V "N" BF
	120	Rapid start	97498	GE240RS120	2 F40 or F34T12 Rapid Start 120V "N" BF ProLine® T12
	120-277	Rapid start	74472	GE240RS-MV-N	2 or 1- F40 or F34T12 Rapid Start 120 to 277 "N" BF
F40T8	347	Instant start	74109	GE232MAXP347-H	2 or 1- F32T8 347V "H" 1.18 BF UltraMax®
	347	Instant start	74111	GE332MAXP347-H	3 - F32T8 347V "H" 1.18 BF UltraMax®
	347	Instant start	74113	GE432MAXP347-H	4 - F32T8 347V "H" 1.18 BF UltraMax®
	120-277	Programmed start	75954	GE132-MVPS-H	1 F32T8 120V-277V High Light 1.18 BF<10% THD UltraStart®
	120-277	Programmed start	75952	GE132-MVPS-L	1 F32T8 120V-277V Low Watts .71 BF <10% THD UltraStart®
	120-277	Programmed start	75953	GE132-MVPS-N	1 F32T8 120V-277V Normal Light .88 BF<10% THD UltraStart®

See page E-1 for warranty information.

Quick reference lamp to ballast selection guide (cont.)

Lamp Type	Voltage	Fluorescent Ballast Type	Ballast Product Code	Ballast Description	Fluorescent Ballast Long Description
Fluorescent Lamps (continued)					
F40T8 (cont)	120-277	Instant start	73233	GE232MAXP90-S60	2 or 1 - F32T8 120 to 277 "H" 1.18 BF UltraMax® 100/60% step dim
	120-277	Instant start	73234	GE232MAXP90-V60	2 or 1 - F32T8 120 to 277 "H" 1.18 BF UltraMax® 0-10V 100-60% dim
	120-277	Instant start	71421	GE232MAXP-N+	2 or 1- F32T8 120 to 277 "N+" 1.0 BF UltraMax®
	120-277	Instant start	74803	GE232MAX-G-H	2 or 1- F32T8 120 to 277 "H" 1.18 BF UltraMax®
	120-277	Instant start	72273	GE232MAX-G-L	2 or 1- F32T8 120 to 277 "L".77 BF UltraMax®
	120-277	Instant start	72275	GE232MAX-G-N	2 or 1- F32T8 120 to 277 "N".87 BF UltraMax®
	120-277	Instant start	73199	GE259MAXP-L/ULTRA	2 or 1- F96T8 120 to 277 "N" .87 BF UltraMax®
	120-277	Instant start	49767	GE259MAXP-N/ULTRA	2 or 1- F96T8 120 to 277 "N" .87 BF UltraMax®
	120-277	Instant start	30176	GE286MAXP-HO-N	2 or 1- F96T8HO IS 120 to 277 "N".87 BF UltraMax®
	120-277	Instant start	73231	GE332MAXP90-S60	3 - F32T8 120 to 277 "H" 1.18 BF UltraMax® 100/60% step dim
	120-277	Instant start	73232	GE332MAXP90-V60	3 - F32T8 120 to 277 "H" 1.18 BF UltraMax® 0-10V 100-60% dim
	120-277	Instant start	78619	GE332MAXP-H/ULTRA	3 or 2- F32T8 120 to 277 "H" 1.18 BF UltraMax®
	120-277	Instant start	71422	GE332MAXP-N+	3 or 2- F32T8 120 to 277 "N+" 1.0 BF UltraMax®
	120-277	Instant start	74461	GE332MAX-G-H	3 or 2- F32T8 120 to 277 "H" 1.18 BF UltraMax®
	120-277	Instant start	74459	GE332MAX-G-L	3 or 2- F32T8 120 to 277 "L" .77 BF UltraMax®
	120-277	Instant start	74456	GE332MAX-G-N	3 or 2- F32T8 120 to 277 "N".87 BF UltraMax®
	120-277	Instant start	73229	GE432MAXP90-S60	4 - F32T8 120 to 277 "H" 1.18 BF UltraMax® 100/60% step dim
	120-277	Instant start	73230	GE432MAXP90-V60	4 - F32T8 120 to 277 "H" 1.18 BF UltraMax® 0-10V 100-60% dim
	120-277	Instant start	71723	GE432MAXP-H/ULTRA	4 or 3- F32T8 120 to 277 "H" 1.18 BF UltraMax®
	120-277	Instant start	71423	GE432MAXP-N+	4 or 3- F32T8 120 to 277 "N+" 1.0 BF UltraMax®
	120-277	Instant start	67911	GE432MAX-G-H	4 or 3- F32T8 120 to 277 "H" 1.15 BF UltraMax®
	120-277	Instant start	74466	GE432MAX-G-L	4 or 3- F32T8 120 to 277 UltraMax®
	120-277	Instant start	74463	GE432MAX-G-N	4 or 3- F32T8 120 to 277 "N".87 BF UltraMax®
	120-277	Instant start	71497	GE632MAXP-H90-S60	6 or 5 - F32T8 120 to 277 "H" 1.18 BF UltraMax® 95% efficiency, 1-wire powerline 100/60% step dim
	120-277	Instant start	71731	GE632MAXP-H90-V60	6 or 5 - F32T8 120 to 277 "H" 1.18 BF UltraMax® 95% efficiency, 2-wire 0-10V 100-60% continuous dim
F48T12	120-277	Instant start	74474	GE260IS-MV-N	2 or 1- F96T12 Instant Start 120 to 277
F48T12/25W	120	Rapid start	72110	GE140RS120	1 F40 or F34T12 Rapid Start Electronic 120V "N" BF
F48T12/HO	120-277	Rapid start	75671	GE296HO-MV-N	2 or 1- F96T12HO RS 120 to 277 MultiVolt ProLine®
F48T8HO	120-277	Instant start	30176	GE286MAXP-HO-N	2 or 1- F96T8HO IS 120 to 277 "N".87 BF
F54T5/HO			74120	GETR480/277-375W	Transformer 480 to 277V, <375 Watts (VA), F can
	120-277	Programmed start	67562	GE254MVPS90-A	2 or 1 - F54T5HO 120 to 277 UltraStart® PS High Temp F Can
	120-277	Programmed start	33957	GE254MVPS-D-1	2 or 1 - F54T5HO 120 to 277 UltraStart® PRS D Can
F54T5/WM	120-277	Programmed start	67562	GE254MVPS90-A	2 or 1 - F54T5HO 120 to 277 UltraStart® PS High Temp F Can
	120-277	Programmed start	33957	GE254MVPS-D-1	2 or 1 - F54T5HO 120 to 277 UltraStart® PRS D Can
F58T8	120-277	Programmed start	67562	GE254MVPS90-A	2 or 1 - F54T5HO 120 to 277 UltraStart® PS High Temp F Can
	120-277	Programmed start	33957	GE254MVPS-D-1	2 or 1 - F54T5HO 120 to 277 UltraStart® PRS D Can
	120-277	Instant start	30176	GE286MAXP-HO-N	2 or 1- F96T8HO IS 120 to 277 "N".87 BF
F60T12	120-277	Instant start	74474	GE260IS-MV-N	2 or 1- F96T12 Instant Start 120 to 277
F60T12/HO	120-277	Rapid start	75671	GE296HO-MV-N	2 or 1- F96T12HO RS 120 to 277 MultiVolt ProLine®
F60T8HO	120-277	Instant start	30176	GE-286-HO-MV-N	2 or 1- F96T8HO IS 120 to 277 "N".87 BF
F64T12	120-277	Instant start	74474	GE260IS-MV-N	2 or 1- F96T12 Instant Start 120 to 277
F70T8	120-277	Rapid start	75671	GE296HO-MV-N	2 or 1- F96T12HO RS 120 to 277 MultiVolt ProLine®
F72T12	120-277	Instant start	74474	GE260IS-MV-N	2 or 1- F96T12 Instant Start 120 to 277
F72T12/HO	120-277	Rapid start	75671	GE296HO-MV-N	2 or 1- F96T12HO RS 120 to 277 MultiVolt ProLine®
F72T8	120-277	Instant start	73199	GE259MAXP-L/ULTRA	2 or 1- F96T8 120 to 277 "N" .87 BF UltraMax®
	120-277	Instant start	49767	GE259MAXP-N/ULTRA	2 or 1- F96T8 120 to 277 "N" .87 BF UltraMax®
F72T8HO	120-277	Instant start	30176	GE286MAXP-HO-N	2 or 1- F96T8HO IS 120 to 277 "N".87 BF
F80T5HO	120-277	Programmed start	72280	GE180MVPS-D	1 - F80T5HO 120 to 277 UltraStart® PRS D Can
F84T12	120-277	Instant start	74474	GE260IS-MV-N	2 or 1- F96T12 Instant Start 120 to 277
F8T9	120	Rapid start	97498	GE240RS120	2 F40 or F34T12 Rapid Start 120V "N" BF ProLine® T12
F96T12	120-277	Instant start	74474	GE260IS-MV-N	2 or 1- F96T12 Instant Start 120 to 277
F96T12/HO	120-277	Rapid start	75671	GE296HO-MV-N	2 or 1- F96T12HO RS 120 to 277 MultiVolt ProLine®
F96T12/WM	120-277	Instant start	74474	GE260IS-MV-N	2 or 1- F96T12 Instant Start 120 to 277
F96T12/WMP	120-277	Instant start	74474	GE260IS-MV-N	2 or 1- F96T12 Instant Start 120 to 277
F96T8	347	Instant start	74099	GE259MAX-G-N-347	2 or 1- F96T8 347V "N" .87 BF UltraMax®
	120-277	Instant start	73199	GE259MAXP-L/ULTRA	2 or 1- F96T8 120 to 277 "N" .87 BF UltraMax®
	120-277	Instant start	49767	GE259MAXP-N/ULTRA	2 or 1- F96T8 120 to 277 "N" .87 BF UltraMax®
	120-277	Instant start	74469	GE259MAX-G-N	2 or 1- F96T8 120 to 277 "N".87 BF UltraMax®
	120-277	Instant start	30176	GE286MAXP-HO-N	2 or 1- F96T8HO IS 120 to 277 "N".87 BF
F96T8/HO	120-277	Instant start	30176	GE286MAXP-HO-N	2 or 1- F96T8HO IS 120 to 277 "N".87 BF
F96T8/WM	347	Instant start	74099	GE25MAX G-N-347	2 or 1- F96T8 347V "N" .87 BF
	120-277	Instant start	73199	GE259MAXP-L/ULTRA	2 or 1- F96T8 120 to 277 "N" .87 BF UltraMax®
	120-277	Instant start	49767	GE259MAXP-N/ULTRA	2 or 1- F96T8 120 to 277 "N" .87 BF UltraMax®
	120-277	Instant start	74469	GE259MAX-G-N-347	2 or 1- F96T8 120 to 277 "N".87 BF UltraMax®
	120-277	Instant start	30176	GE286MAXP-HO-N	2 or 1- F96T8HO IS 120 to 277 "N".87 BF UltraMax®
F96T8/WMP	347	Instant start	74099	GE259MAX-G-N-347	2 or 1- F96T8 347V "N" .87 BF UltraMax®
	120-277	Instant start	73199	GE259MAXP-L/ULTRA	2 or 1- F96T8 120 to 277 "N" .87 BF UltraMax®
	120-277	Instant start	49767	GE259MAXP-N/ULTRA	2 or 1- F96T8 120 to 277 "N" .87 BF UltraMax®
	120-277	Instant start	74469	GE259MAX-G-N	2 or 1- F96T8 120 to 277 "N".87 BF UltraMax®
	120-277	Instant start	30176	GE286MAXP-HO-N	2 or 1- F96T8HO IS 120 to 277 "N".87 BF UltraMax®

See page E-1 for warranty information.

Lamp Type	Voltage	Fluorescent Ballast Type	Ballast Product Code	Ballast Description	Fluorescent Ballast Long Description
Fluorescent Lamps (continued)					
FC12T5HO	120-277	Programmed start	67562	GE254MVPS90-A	2 or 1 - F54T5HO 120 to 277 UltraStart® PS High Temp F Can
FC16T9	120-277	Programmed start	71445	GEC226-MVPS-3W	2-CFQ26W FT24 or 1-42W CFTR32 3 Way Mounting Kit 120-277V ProLine® PS
	120-277	Programmed start	71443	GEC226-MVPS-BES	2-CFQ26W FT24 or 1-42W CFTR32 Bottom Exit w Studs 120-277V ProLine® PS
	120-277	Programmed start	71444	GEC226-MVPS-SE	2-CFQ26W FT24 or 1-42W CFTR32 Side Exit 120-277V ProLine® PS
FC16T9/40W	120-277	Programmed start	71443	GEC226-MVPS-BES	2-CFQ26W FT24 or 1-42W CFTR32 Bottom Exit w Studs 120-277V ProLine® PS
	120-277	Programmed start	71444	GEC226-MVPS-SE	2-CFQ26W FT24 or 1-42W CFTR32 Side Exit 120-277V ProLine® PS
FC16T9/ FC12T9	120	Rapid start	68190	GEM1FC16T9RS120	2- FC12T9 FC16T9 FC8T9 FC12T9 120V Magnetic (726VLHWSTCP)
FC6T9	120	Rapid start	86227	GEM1FC8T9RS120IP	1- FC8T9 RS 120V Magnetic Ballast(547RSWSTCP)
FC8T9/FC12T9	120	Rapid start	89717	GEM1FC12T9RS120	2 FC12T9 RS 120V Magnetic Ballast (449LRWSTCP)
	120	Rapid start	68190	GEM1FC16T9RS120	2- FC12T9 FC16T9 FC8T9 FC12T9 120V Magnetic (726VLHWSTCP)
FE15T8	347	Instant start	74101	GE132MAX-G-N-347	1- F32T8 347V "N" .87 BF ProLine®
	347	Instant start	74109	GE232MAXP347-H	2 or 1- F32T8 347V "H" 1.18 BF UltraMax®
	347	Instant start	74103	GE232MAX-G-N-347	2 or 1- F32T8 347V "N" .87 BF UltraMax®
	347	Instant start	74111	GE332MAXP347-H	3 - F32T8 347V "H" 1.18 BF UltraMax®
	347	Instant start	74105	GE332MAX-G-N-347	3 or 2- F32T8 347V "N" .87 BF UltraMax®
	347	Instant start	74113	GE432MAXP347-H	4 - F32T8 347V "H" 1.18 BF UltraMax®
	347	Instant start	74098	GE432MAXP347-L	4 or 3- F32T8 347V "L" .77 BF UltraMax®
	347	Instant start	74095	GE432MAXP347-N	4 or 3- F32T8 347V "N" .87 BF UltraMax®
	347	Instant start	74107	GE432MAX-G-N-347	4 or 3- F32T8 347V "N" .87 BF UltraMax®
	347	Instant start	74096	GE232MAXP347-L	2 or 1- F32T8 347V "L" .77 BF UltraMax®
	347	Instant start	74093	GE232MAXP347-N	2 or 1- F32T8 347V "N" .87 BF UltraMax®
	347	Instant start	74094	GE332MAXP347-N	3 or 2- F32T8 347V "N" .87 BF UltraMax®
	120-277	Instant start	72258	GE132MAXP-L/ULTRA	1- F32T8 120 to 277 "L" .77BF UltraMax®
	120-277	Instant start	72259	GE132MAXP-N/ULTRA	1- F32T8 120 to 277"N" .87 BF UltraMax®
	120-277	Programmed start	75954	GE132-MVPS-H	1 F32T8 120V-277V High Light 1.18 BF<10% THD UltraStart®
	120-277	Programmed start	75952	GE132-MVPS-L	1 F32T8 120V-277V Low Watts .71 BF <10% THD UltraStart®
	120-277	Programmed start	75953	GE132-MVPS-N	1 F32T8 120V-277V Normal Light .88 BF<10% THD UltraStart®
	120-277	Instant start	72262	GE232MAXP-L/ULTRA	2 or 1- F32T8 120 to 277 "L" .77 BF UltraMax®
	120-277	Instant start	72266	GE232MAXP-N/ULTRA	2 or 1- F32T8 120 to 277 "N" .87 BF UltraMax®
	120-277	Instant start	71421	GE232MAXP-N+	2 or 1- F32T8 120 to 277 "N+" 1.0 BF UltraMax®
	120-277	Instant start	78619	GE332MAXP-H/ULTRA	3 or 2- F32T8 120 to 277 "H" 1.18 BF UltraMax®
	120-277	Instant start	78621	GE332MAXP-L/ULTRA	3 or 2- F32T8 120 to 277 "L" .77 BF UltraMax®
	120-277	Instant start	78623	GE332MAXP-N/ULTRA	3 or 2- F32T8 120 to 277 "N" .87 BF UltraMax®
	120-277	Instant start	71422	GE332MAXP-N+	3 or 2- F32T8 120 to 277 "N+" 1.0 BF UltraMax®
	120-277	Instant start	71723	GE432MAXP-H/ULTRA	4 or 3- F32T8 120 to 277 "H" 1.18 BF UltraMax®
	120-277	Instant start	78625	GE432MAXP-L/ULTRA	4 or 3- F32T8 120 to 277 "L" .77 BF UltraMax®
	120-277	Instant start	78627	GE432MAXP-N/ULTRA	4 or 3- F32T8 120 to 277 "N" .87 BF UltraMax®
	120-277	Instant start	71423	GE432MAXP-N+	4 or 3- F32T8 120 to 277 "N+" 1.0 BF UltraMax®
FT24W/2G10	120-277	Programmed start	68976	GE224MVPS-N	2- F24T5HO PRS UNV 50/60 Hz
	120-277	Programmed start	63097	GEC226-MVPS-3W	2-CFQ26W FT24 or 1-42W CFTR32 3 Way Mounting Kit 120-277V ProLine® PS
	120-277	Programmed start	63098	GEC226-MVPS-BES	2-CFQ26W FT24 or 1-42W CFTR32 Bottom Exit w Studs 120-277V ProLine® PS
	120-277	Programmed start	63099	GEC226-MVPS-SE	2-CFQ26W FT24 or 1-42W CFTR32 Side Exit 120-277V ProLine® PS
FT24W/4P	120-277	Programmed start	68976	GE224MVPS-N	2- F24T5HO PRS UNV 50/60 Hz
FT36W/4P	120	Rapid start	97498	GE240RS120	2 F40 or F34T12 Rapid Start 120V "N" BF ProLine® T12
	120-277	Programmed start	68976	GE224MVPS-N	2- F24T5HO PRS UNV 50/60 Hz
	120-277	Programmed start	94131	GE254MVPS-D-1	2 or 1 - F54T5HO 120 to 277 UltraStart® PRS D Can
FT39W/4P	120-277	Programmed start	47540	B239PUNV-DOG1C	2- F39T5HO PRS UNV 50/60 Hz
	120-277	Programmed start	47540	B239PUNV-DOG1C	2- F39T5HO PRS UNV 50/60 Hz
	120-277	Programmed start	67562	GE254MVPS90-A	2 or 1 - F54T5HO 120 to 277 UltraStart® PS High Temp F Can
FT50W/4P	120-277	Programmed start	67562	GE254MVPS90-A	2 or 1 - F54T5HO 120 to 277 UltraStart® PS High Temp F Can
	120-277	Programmed start	94131	GE254MVPS-D-1	2 or 1 - F54T5HO 120 to 277 UltraStart® PRS D Can
FT55W/4P	120-277	Programmed start	67562	GE254MVPS90-A	2 or 1 - F54T5HO 120 to 277 UltraStart® PS High Temp F Can
	120-277	Programmed start	94131	GE254MVPS-D-1	2 or 1 - F54T5HO 120 to 277 UltraStart® PRS D Can

See page E-1 for warranty information.

Quick reference lamp to ballast selection guide (cont.)

Lamp Type	Use with ANSI Lamp Types	Wattage	PC	New GE Description	Circuit Type	Frame Size	Voltage	Kit Capacitor		Replacement Capacitor		Replacement Ignitor
								uF	Min VAC	PC	Description	
High Intensity Discharge (HID) Lamps												
Metal Halide	M110	50	63073	GEM50MLTLA3D-5	HX-HPF	3x4	120/208/240/277	6	280	75425	GECAP-6/280V-D	MH350-1A
	M148	50	63073	GEM50MLTLA3D-5	HX-HPF	3x4	120/208/240/277	6	280	75425	GECAP-6/280V-D	MH350-1A
	M143	70	67337	GEM7048TLA3D-5	HX-HPF	3x4	120/480	8	280	75426	GECAP-8/280V-D	MH350-1A
	M143	70	86847	GEM70MLTLA3D-5	HX-HPF	3x4	120/208/240/277	8	280	75426	GECAP-8/280V-D	MH350-1A
	M143	70	78517	GEM70TRILC3-5	HX-HPF	3x4	120/277/347	8	300	75426	GECAP-8/280V-D	MH350-1A
	M85	70	86576	11210277CTC000C	HX-HPF	F-Can	120/277					
	M98	70	63047	GEMH70MVR-F	HX-HPF	F-Can	120/277					
	M98	70	67337	GEM7048TLA3D-5	HX-HPF	3x4	120/480	8	280	75426	GECAP-8/280V-D	MH350-1A
	M98	70	86847	GEM70MLTLC3D-5	HX-HPF	3x4	120/208/240/277	8	280	75426	GECAP-8/280V-D	MH350-1A
	M140	100	67333	GEM10048TLA3D-5	HX-HPF	3x4	120/480	12	280	75427	GECAP-12/280V-D	MH350-1A
	M140	100	86675	GEM100MLTLC3D-5	HX-HPF	4.25x5.75	120/208/240/277	12	280	75427	GECAP-12/280V-D	MH350-1A
	M140	100	78519	GEM100TRILC3-5	HX-HPF	3x4	120/277/347	12	300	75427	GECAP-12/280V-D	MH350-1A
	M90	100	63048	GEMH100MVR-F	HX-HPF	F-Can	120/277					
	M90	100	67333	GEM10048TLA3D-5	HX-HPF	3x4	120/480	12	280	75427	GECAP-12/280V-D	MH350-1A
	M90	100	86675	GEM100MLTLC3D-5	HX-HPF	4.25x5.75	120/208/240/277	12	280	75427	GECAP-12/280V-D	MH350-1A
	M92	100	67333	GEM10048TLA3D-5	HX-HPF	3x4	120/480	12	280	75427	GECAP-12/280V-D	MH350-1A
	M92	100	86675	GEM100MLTLC3D-5	HX-HPF	4.25x5.75	120/208/240/277	12	280	75427	GECAP-12/280V-D	MH350-1A
	M102	150	86711	GEM15048TLC3D-5	HX-HPF	3x4	120/480	16	280	75428	GECAP-16/280V-D	MH350-1A
	M102	150	86718	GEM150MLTLC3D-5	HX-HPF	3x4	120/208/240/277	16	280	75428	GECAP-16/280V-D	MH350-1A
	M102	150	78520	GEM150TRILC3-5	HX-HPF	3x4	120/277/347	16	300	75428	GECAP-16/280V-D	MH350-1A
	M107	150	86711	GEM15048TLC3D-5	HX-HPF	3x4	120/480	16	280	75428	GECAP-16/280V-D	MH350-1A
	M107	150	86718	GEM150MLTLC3D-5	HX-HPF	3x4	120/208/240/277	16	280	75428	GECAP-16/280V-D	MH350-1A
	M142	150	86711	GEM15048TLC3D-5	HX-HPF	3x4	120/480	16	280	75428	GECAP-16/280V-D	MH350-1A
	M142	150	86718	GEM150MLTLC3D-5	HX-HPF	3x4	120/208/240/277	16	280	75428	GECAP-16/280V-D	MH350-1A
	M57	175	86563	1110245SCTC000I	CWA	F-Can	120/277					
	M57	175	87210	GEM175ML5AC3-5	CWA	3x4	120/208/240/277/480	10	400	75433	GECAP-10/400V-O	N/A
	M57	175	86741	GEM175MLTAC3-5	CWA	3x4	120/208/240/277	10	400	75433	GECAP-10/400V-O	N/A
	M57	175	78521	GEM175TRIAC3-5	CWA	3x4	120/277/347	12	450			N/A
	M58	250	63050	GEMH175MVA-F	CWA	F-Can	120/277					
	M58	250	87211	GEM250ML5AC3-5	CWA	3x4	120/208/240/277/480	15	400	75434	GECAP-15/400V-O	N/A
	M58	250	87212	GEM250ML5AC4-5	CWA	4.25x4.75	120/208/240/277/480	15	400	75434	GECAP-15/400V-O	N/A
	M58	250	86765	GEM250MLTAC3-5	CWA	4.25x4.75	120/208/240/277	15	400	75434	GECAP-15/400V-O	N/A
	M58	250	78522	GEM250TRIAC4-5	CWA	3x4	120/277/347	15	450	75434	GECAP-15/400V-O	N/A
	M58	250	63051	GEMH250MVA-F	CWA	F-Can	120/277					
	M59	400	63052	GEMH4000MVA-F	CWA	F-Can	120/277					
	M59	400	86803	GEM40048TAC4-5	CWA	4.25x4.75	120/480	24	400	75435	GECAP-24/400V-O	N/A
	M59	400	72300	GEM400ML5AA4-5	CWA	4.25x4.75	120/208/240/277/480	24	400	75435	GECAP-24/400V-O	N/A
	M59	400	72149	GEM400MLTAA4-5	CWA	4.25x4.75	120/208/240/277	24	400	75435	GECAP-24/400V-O	N/A
	M59	400	78523	GEM400TRIAC4-5	CWA	4.25x4.75	120/277/347	24	450	75668	GECAP-24/480V-O	N/A
	M47	1000	63069	GEM100048TAC5-5	CWA	4.25x6.00	120/480	24	480	75668	GECAP-24/480V-O	N/A
	M47	1000	87213	GEM1000ML5AA5-5	CWA	4.25x6.00	120/208/240/277/480	24	480	75668	GECAP-24/480V-O	N/A
	M47	1000	86655	GEM1000MLTAA5-5	CWA	4.25x6.00	120/208/240/277	24	480	75668	GECAP-24/480V-O	N/A
	M47	1000	78524	GEM1000TRIAC5-5	CWA	4.25x6.00	120/277/347	24	540	75668	GECAP-24/480V-O	N/A
	M48	1500	86693	GEM150048TAC5-5	CWA	4.25x6.00	120/480	32	525	75438	GECAP-32/525V-O	N/A
	M48	1500	86698	GEM1500MLTAC5-5	CWA	4.25x6.00	120/208/240/277	32	525	75438	GECAP-32/525V-O	N/A
Pulse Start	M156	20	87490	GEMH20-MLF-120	eHID	3.7x1.6x1.0	120					Internal
	M130	39	87501	GEMH39-MSF-120	eHID	3.7x3.0x1.2	120					Internal
	C148	50	87516	GEMH50-MSF-120	eHID	3.7x3.0x1.2	120					Internal
	M110	50	87516	GEMH50-MSF-120	eHID	3.7x3.0x1.2	120					Internal
	M148	50	87516	GEMH50-MSF-120	eHID	3.7x3.0x1.2	120					Internal
	C143	70	87531	GEMH70-MSF-120	eHID	3.7x3.0x1.2	120					Internal
	C143	70	87546	GEMH70-SLJ-MV	eHID	7.3x2.6x2.2	120-277					Internal
	M139	70	87531	GEMH70-MSF-120	eHID	3.7x3.0x1.2	120					Internal
	M139	70	87531	GEMH70-MSF-120	eHID	3.7x3.0x1.2	120					Internal
	M143	70	87531	GEMH70-MSF-120	eHID	3.7x3.0x1.2	120					Internal
	M143	70	87546	GEMH70-SLJ-MV	eHID	7.3x2.6x2.2	120-277					Internal
	M98	70	87531	GEMH70-MSF-120	eHID	3.7x3.0x1.2	120					Internal
	M98	70	87546	GEMH70-SLJ-MV	eHID	7.3x2.6x2.2	120-277					Internal
	C140	100	87561	GEMH100-SLJ-MV	eHID	7.3x2.6x2.2	120-277					Internal
	M140	100	87561	GEMH100-SLJ-MV	eHID	7.3x2.6x2.2	120-277					Internal
	M90	100	87561	GEMH100-SLJ-MV	eHID	7.3x2.6x2.2	120-277					Internal
	C142	150	87576	GEMH150-SLJ-MV	eHID	7.3x2.6x2.2	120-277					Internal
	M102	150	87576	GEMH150-SLJ-MV	eHID	7.3x2.6x2.2	120-277					Internal
	M142	150	87576	GEMH150-SLJ-MV	eHID	7.3x2.6x2.2	120-277					Internal
	M137	175	86876	GEP17548TAC3-5	CWA	3x4	120/480	10	400	75433	GECAP-10/400V-O	MH350-1A
	M137	175	67335	GEP175MLTAC3-5	CWA	3x4	120/208/240/277	10	400	75433	GECAP-10/400V-O	MH350-1A
	M152	175	86876	GEP17548TAC3-5	CWA	3x4	120/480	10	400	75433	GECAP-10/400V-O	MH350-1A
	M152	175	67335	GEP175MLTAC3-5	CWA	3x4	120/208/240/277	10	400	75433	GECAP-10/400V-O	MH350-1A
	M152	175	78525	GEP175TRIAC3-5	CWA	3x4	120/277/347	12	450			MH350-1A
	M136	250	78526	GEP200TRIAC3-5	CWA	3x4	120/277/347	16	450			MH350-1A
	M138	250	67336	GEP25048TAA4-5	CWA	4.25x4.75	120/480	15	400	75434	GECAP-15/400V-O	MH350-1A

See page E-1 for warranty information.

High Intensity Discharge (HID) Lamps (continued)

Lamp Type	Use with ANSI Lamp Types	Wattage	PC	New GE Description	Circuit Type	Frame Size	Voltage	Kit Capacitor uF	Kit Capacitor Min VAC	Replacement Capacitor PC	Replacement Capacitor Description	Replacement Ignitor
Pulse Start (cont)	M138	250	67344	GEP250MLTAA4-5	CWA	4.25x4.75	120/208/240/277	15	400	75434	GECAP-15/400V-O	MH350-1A
	M138	250	78527	GEP250TRIAC4-5	CWA	4.25x4.75	120/277/347	15	450	75434	GECAP-15/400V-O	MH350-1A
	M153	250	67336	GEP25048TAA4-5	CWA	4.25x4.75	120/480	15	400	75434	GECAP-15/400V-O	
	M153	250	67344	GEP250MLTAA4-5	CWA	4.25x4.75	120/208/240/277	15	400	75434	GECAP-15/400V-O	MH350-1A
	CMH320	320	29377	GE-MH-250-400-MA	eHID		208-277					Internal
	M132	320	67342	GEP32048TAA4-5	CWA	4.25x4.75	120/480	21	345	75431	GECAP-21/345V-O	MH350-1A
	M132	320	67345	GEP320MLTAA4-5	CWA	4.25x4.75	120/208/240/277	21	345	75431	GECAP-21/345V-O	MH350-1A
	M132	320	78528	GEP320TRIAC4-5	CWA	4.25x4.75	120/277/347	21	450	75431	GECAP-21/345V-O	MH350-1A
	M154	320	67342	GEP32048TAA4-5	CWA	4.25x4.75	120/480	21	345	75431	GECAP-21/345V-O	MH350-1A
	M154	320	67345	GEP320MLTAA4-5	CWA	4.25x4.75	120/208/240/277	21	345	75431	GECAP-21/345V-O	MH350-1A
	M154	320	78528	GEP320TRIAC4-5	CWA	4.25x4.75	120/277/347	21	345	75431	GECAP-21/345V-O	MH350-1A
	M131	350	67346	GEP350MLTAA4-5	CWA	4.25x4.75	120/208/240/277	22.5	345	75432	GECAP-225/345V-O	MH350-1A
	M131	350	78529	GEP350TRIAC4-5	CWA	4.25x4.75	120/277/347	22	450			MH350-1A
	M135	400	67347	GEP400MLTAA4-5	CWA	4.25x4.75	120/480	24	400	75435	GECAP-24/400V-O	MH350-1A
	M135	400	67347	GEP400MLTAA4-5	CWA	4.25x4.75	120/208/240/277	24	400	75435	GECAP-24/400V-O	MH350-1A
	M135	400	78530	GEP400TRIAC4-5	CWA	4.25x4.75	120/277/347	26	450	75437	GECAP-26/545V-O	MH350-1A
	M155	400	67347	GEP400MLTAA4-5	CWA	4.25x4.75	120/208/240/277	24	400	75435	GECAP-24/400V-O	MH350-1A
	M155	400	67341	GEP40048TAA4-5	CWA	4.25x4.75	120/480	24	400	75435	GECAP-24/400V-O	MH350-1A
	M149	750	67343	GEP75048TAA5-5	CWA	4.25x6.00	120/480	28	400	75436	GECAP-28/400V-O	MH750-1B
	M149	750	67359	GEP750MLTAA5-5	CWA	4.25x6.00	120/208/240/277	28	400	75436	GECAP-28/400V-O	MH750-1B
	M149	750	78531	GEP750TRIAC5-5	CWA	4.25x6.00	120/277/347	28	450	75436	GECAP-28/400V-O	MH750-1B
	M141	1000	67349	GEP1000ML5AA5-5	CWA	4.25x6.00	120/208/240/277/480	24	480	75668	GECAP-24/480V-O	HPS1000-4B
	M141	1000	67348	GEP1000MLTAA5-5	CWA	4.25x6.00	120/208/240/277	24	480	75668	GECAP-24/480V-O	HPS1000-4B
	M141	1000	78532	GEP1000TRIAC5-5	CWA	4.25x6.00	120/277/347	25	450			HPS1000-4B
High Pressure Sodium	S68	50	87152	GES50MLTLC3D-5	HX-HPF	3x4	120/208/240/277	5	300	75429	GECAP-5/300V-D	HPS150-3A
	S62	70	86596	12210237CTC000I	HX-HPF	F-Can	120/277					Internal
	S62	70	86605	1233142U000I	R-HPF, R-NPF	2.81x3.94	120					Internal
	S68	70	78533	GES50TRILC3-5	HX-HPF	3x4	120/277/347	5	300			HPS150-3A
	S62	70	86456	GES7048TLC3D-5	HX-HPF	3x4	120/480	7	300	75430	GECAP-7/300V-D	HPS150-3A
	S62	70	86587	GES70MLTLC3D-5	HX-HPF	3x4	120/208/240/277	7	300	75430	GECAP-7/300V-D	HPS150-3A
	S62	70	78534	GES70TRILC3-5	HX-HPF	3x4	120/277/347	7	300	75430	GECAP-7/300V-D	HPS150-3A
	S54	100	87068	GES10048TLC3D-5	HX-HPF	3x4	120/480	10	280	75433	GECAP-10/400V-O	HPS150-3A
	S54	100	87074	GES100MLTLC3D-5	HX-HPF	3x4	120/208/240/277	10	280	75433	GECAP-10/400V-O	HPS150-3A
	S54	100	78535	GES100TRILC3-5/2	HX-HPF	3x4	120/277/347	10	300	75433	GECAP-10/400V-O	HPS150-3A
	S55	150	86606	1233154U000I	R-NPF	2.81x3.94	120					Internal
	S55	150	67339	GES15048TLA3D-5	HX-HPF	3x4	120/480	14	280	75669	GECAP-14/280V-D	HPS150-3A
	S55	150	87094	GES150MLTLC3D-5	HX-HPF	3x4	120/208/240/277	14	280	75669	GECAP-14/280V-D	HPS150-3A
	S55	150	78536	GES150TRILC3-5	HX-HPF	3x4	120/277/347	14	300	75669	GECAP-14/280V-D	HPS150-3A
	S50	250	87214	GES250ML5AC4-5	CWA	4.25x4.75	120/208/240/277/480	35	240	75422	GECAP-35/240V-O	HPS400-3A
	S50	250	87121	GES250MLTAC4-5	CWA	4.25x4.75	120/208/240/277	35	240	75422	GECAP-35/240V-O	HPS400-3A
	S50	250	78537	GES250TRIAC4-5	CWA	4.25x4.75	120/277/347	33	300			HPS400-3A
	S51	400	87198	GES40048TAC4-5	CWA	4.25x4.75	120/480	55	240	75423	GECAP-55/240V-O	HPS400-3A
	S51	400	63066	GES400ML5AA4-5	CWA	4.25x4.75	120/208/240/277/480	55	240	75423	GECAP-55/240V-O	HPS400-3A
	S51	400	87164	GES400MLTAC4-5	CWA	4.25x4.75	120/208/240/277	55	240	75423	GECAP-55/240V-O	HPS400-3A
	S51	400	78539	GES400TRIAC4-5	CWA	4.25x4.75	120/277/347	55	300	75423	GECAP-55/240V-O	HPS400-3A
	S52	1000	67351	GES100048TAA5-5	CWA	4.25x6.00	120/480	26	525	75437	GECAP-26/525V-O	HPS1000-4B
	S52	1000	87218	GES1000ML5AC5-5	CWA	4.25x6.00	120/208/240/277/480	26	525	75437	GECAP-26/525V-O	HPS1000-4B
	S52	1000	87056	GES1000MLTAC5-5	CWA	4.25x6.00	120/208/240/277	26	525	75437	GECAP-26/525V-O	HPS1000-4B
	S52	1000	78540	GES1000TRIAC5-5	CWA	4.25x6.00	120/277/347	26	540	75437	GECAP-26/525V-O	HPS1000-4B
Mercury	H39	175	63078	GEM175ML5AA3-5	CWA	3x4	120/208/240/277/480	10	400	75433	GECAP-10/400V-O	N/A
	H39	175	86741	GEM175MLTAC3-5	CWA	3x4	120/208/240/277	10	400	75433	GECAP-10/400V-O	N/A
	H37	250	87211	GEM250ML5AC3-5	CWA	3x4	120/208/240/277/480	15	400	75434	GECAP-15/400V-O	N/A
	H37	250	87212	GEM250ML5AC4-5	CWA	4.25x4.75	120/208/240/277/480	15	400	75434	GECAP-15/400V-O	N/A
	H37	250	63077	GEM250MLTAA3-5	CWA	3x4	120/208/240/277	15	400	75434	GECAP-15/400V-O	N/A
	H33	400	86803	GEM40048TAC4-5	CWA	4.25x4.75	120/480	24	400	75435	GECAP-24/400V-O	N/A
	H33	400	72300	GEM400ML5AA4-5	CWA	4.25x4.75	120/208/240/277/480	24	400	75435	GECAP-24/400V-O	N/A
	H33	400	72149	GEM400MLTAA4-5	CWA	4.25x4.75	120/208/240/277	24	400	75435	GECAP-24/400V-O	N/A
	H36	1000	63059	GEM100048TAA5-5	CWA	4.25x6.00	120/480	24	480	75668	GECAP-24/480V-O	N/A
	H36	1000	87213	GEM1000ML5AC5-5	CWA	4.25x6.00	120/208/240/277/480	24	480	75668	GECAP-24/480V-O	N/A
	H36	1000	86655	GEM1000MLTAC5-5	CWA	4.25x6.00	120/208/240/277	24	480	75668	GECAP-24/480V-O	N/A

See page E-1 for warranty information.

Notes

See page E-1 for warranty information.

Quick reference ballast selection guide

	Std Pack Prod Code	Description	Application	Product Page Number	Pallet Pack	DIY Pack	Std Pack Units Per Carton
T8 Fluorescent Ballasts							
T8 INSTANT START BALLASTS							
UltraMax® Professional Series Instant Start Multi-Voltage 120-277V High-Efficiency							
For F17 (2 ft), F25 (3 ft), F32 (4 ft), F40 (5 ft) Lamps							
	72258	GE132MAXP-L/ULTRA	1 – F32T8 120 to 277 "L" .77 BF UltraMax® P	10-7			10
	72259	GE132MAXP-N/ULTRA	1 – F32T8 120 to 277 "N" .87 BF UltraMax® P	10-8			10
	63885	GE132MAXP-H/ULTRA	1 – F32T8 120 to 277 "H" 1.18 BF UltraMax® P	10-9			10
	73190	GE232MAXP-H/ULTRA	2 or 1 – F32T8 120 to 277 "H" 1.18 BF UltraMax® P	10-10	73191		10
	72262	GE232MAXP-L/ULTRA	2 or 1 – F32T8 120 to 277 "L" .77 BF UltraMax® P	10-11	72263		10
	72266	GE232MAXP-N/ULTRA	2 or 1 – F32T8 120 to 277 "N" .87 BF UltraMax® P	10-12	72267		10
	71421	GE232MAXP-N+	2 or 1 – F32T8 120 to 277 "N+" 1.0 BF UltraMax® P	10-13			10
	78619	GE332MAXP-H/ULTRA	3 or 2 – F32T8 120 to 277 "H" 1.18 BF UltraMax® P	10-14	78620		10
	78621	GE332MAXP-L/ULTRA	3 or 2 – F32T8 120 to 277 "L" .77 BF UltraMax® P	10-15			10
	78623	GE332MAXP-N/ULTRA	3 or 2 – F32T8 120 to 277 "N" .87 BF UltraMax® P	10-16		71722	10
	71422	GE332MAXP-N+	3 or 2 – F32T8 120 to 277 "N+" 1.0 BF UltraMax® P	10-17			10
	71723	GE432MAXP-H/ULTRA	4 or 3 – F32T8 120 to 277 "H" 1.18 BF UltraMax® P	10-18	71724		10
	78625	GE432MAXP-L/ULTRA	4 or 3 – F32T8 120 to 277 "L" .77 BF UltraMax® P	10-19			10
	78627	GE432MAXP-N/ULTRA	4 or 3 – F32T8 120 to 277 "N" .87 BF UltraMax® P	10-20		71730	10
	71423	GE432MAXP-N+	4 or 3 – F32T8 120 to 277 "N+" 1.0 BF UltraMax® P	10-21			10
	74117	GE632MAXP-H90	6 or 5 – F32T8 120 to 277 "H" 1.18 BF UltraMax® P	10-22			10
For 46–59W 4 ft – 8 ft Slimline Lamps							
	49767	GE259MAXP-N/ULTRA	2 or 1 – F96T8 120 to 277 "N" .87 BF UltraMax® P	10-23		23954	10
	73199	GE259MAXP-L/ULTRA	2 or 1 – F96T8 120 to 277 "L" .77 BF UltraMax® P	10-24			10
UltraMax® Professional Series MultiVolt High Output 120–277V							
For 44-86W 4 ft - 8 ft HO Lamps							
	63888	GE286MAXP-HO-N	2 or 1 – F96T8HO IS 120 to 277 "N" 0.87 BF	10-25			10
UltraMax® Professional Series 347V High-Efficiency							
	74093	GE232MAXP347-N	2 or 1 – F32T8 347V "N" .87 BF UltraMax® P	10-26			10
	67435	GE232MAXP347-N+	2 or 1 – F32T8 347V "N+" 1.0 BF UltraMax® P	10-27			10
	74094	GE332MAXP347-N	3 or 2 – F32T8 347V "N" .87 BF UltraMax® P	10-28			10
	74095	GE432MAXP347-N	4 or 3 – F32T8 347V "N" .87 BF UltraMax® P	10-29			10
	74096	GE232MAXP347-L	2 or 1 – F32T8 347V "L" .77 BF UltraMax® P	10-30			10
	74097	GE332MAXP347-L	3 or 2 – F32T8 347V "L" .77 BF UltraMax® P	10-31			10
	74098	GE432MAXP347-L	4 or 3 – F32T8 347V "L" .77 BF UltraMax® P	10-32			10
	74109	GE232MAXP347-H	2 or 1 – F32T8 347V "H" 1.18 BF UltraMax® P	10-33			10
	74111	GE332MAXP347-H	3 or 2 – F32T8 347V "H" 1.18 BF UltraMax® P	10-34			10
	74113	GE432MAXP347-H	4 or 3 – F32T8 347V "H" 1.18 BF UltraMax® P	10-35			10
UltraMax® Professional Series 480V High-Efficiency							
	62718	GE232MAXP480-H	2 or 1 – F32T8 480V "H" 1.18 BF UltraMax® P	10-36			10
	62719	GE332MAXP480-H	3 or 2 – F32T8 480V "H" 1.18 BF UltraMax® P	10-37			10
	62720	GE432MAXP480-H	4 or 3 – F32T8 480V "H" 1.18 BF UltraMax® P	10-38			10
UltraMax® General Series T8 Multi-Voltage 120–277V							
For F17 (2 ft), F25 (3 ft), F32 (4 ft), F40 (5 ft) Lamps							
	72269	GE132MAX-G-N	1 – F32T8 120 to 277 "N" .87 BF Mulivolt UltraMax® G	10-39	72270		10
	74803	GE232MAX-G-H	2 or 1 – F32T8 120 to 277 "H" 1.18 BF Multivolt UltraMax® G	10-40	74804		10
	72273	GE232MAX-G-L	2 or 1 – F32T8 120 to 277 "L" .77 BF Multivolt UltraMax® G	10-41			10
	72275	GE232MAX-G-N	2 or 1 – F32T8 120 to 277 "N" .87 BF Multivolt UltraMax® G	10-42	72276	93883	10
	74461	GE332MAX-G-H	3 or 2 – F32T8 120 to 277 "H" 1.15 BF Multivolt UltraMax® G	10-43	74462		10
	74459	GE332MAX-G-L	3 or 2 – F32T8 120 to 277 "L" .77 BF Multivolt UltraMax® G	10-44			10
	74456	GE332MAX-G-N	3 or 2 – F32T8 120 to 277 "N" .87 BF Multivolt UltraMax® G	10-45	74457	93869	10
	67911	GE432MAX-G-H	4 or 3 – F32T8 120 to 277 "H" 1.18 BF Multivolt UltraMax® G	10-46			10
	74466	GE432MAX-G-L	4 or 3 – F32T8 120 to 277 "L" .77 BF Multivolt UltraMax® G	10-47			10
	74463	GE432MAX-G-N	4 or 3 – F32T8 120 to 277 "N" .87 BF Multivolt UltraMax® G	10-48	74464	93868	10
For 46–59W 4 ft – 8 ft Slimline Lamps							
	72271	GE159MAX-G-N	1 – F96T8 120 to 277 "N" .87 BF UltraMax® G	10-49	72272		10
	74469	GE259MAX-G-N	2 or 1 – F96T8 120 to 277 "N" .87 BF UltraMax® G	10-50	74470	93879	10

See page E-1 for warranty information.

Quick reference ballast selection guide (cont.)

	Std Pack Prod Code	Description	Application	Product Page Number	Pallet Pack	DIY Pack	Std Pack Units Per Carton
T8 Fluorescent Ballasts (continued)							
T8 INSTANT START BALLASTS (continued)							
UltraMax® General Series 347V Instant Start High Performance							
	74101	GE132MAX-G-347	1 – F32T8 347V "N" 0.87 BF UltraMax® G	10-51			10
	74103	GE232MAX-G-347	2 or 1 – F32T8 347V "N" 0.87 BF UltraMax® G	10-52			10
	74105	GE332MAX-G-347	3 or 2 – F32T8 347V "N" 0.87 BF UltraMax® G	10-53			10
	74107	GE432MAX-G-347	4 or 3 – F32T8 347V "N" 0.87 BF UltraMax® G	10-54			10
	74099	GE259MAX-G-347	2 or 1 – F96T8 347V "N" 0.87 BF UltraMax® G	10-55	74100		10
ProLine® T8 Instant Start 120V and 277V High Performance							
For F17 (2 ft), F25 (3 ft), F32 (4 ft), F40 (5 ft) Lamps							
	23673	GE-332-120-N	3 or 2 – F32T8 120V "N" .87 BF ProLine®	10-56	24165		10
For 46–59W 4 ft – 8 ft Slimline Lamps							
	23677	GE-259-120-N	2 or 1 – F96T8 120V Normal Light .87 BF ProLine®	10-57			10
Residential Grade ProLine® T8 120V							
For F17 (2 ft), F25 (3 ft), F32 (4 ft) Lamps							
	97782	GE232-120-RES	2 or 1 – F32T8 120V "N" .87 BF Residential ProLine®	10-58		93884	10
	97783	GE432-120-RES	4 or 3 – F32T8 120V "N" .87 BF Residential ProLine®	10-59		93885	10
ELECTROMAGNETIC T8 120V AND 277V BALLASTS							
For F17 (2 ft), F25 (3 ft), F32 (4 ft) Lamps							
	87125	GEM232T8RS120	2 – F32T8 RS 120V Magnetic Ballast (M232SR120C)	10-60		87125	10
T8 PROGRAMMED START BALLASTS							
UltraStart® T8 120V–277V Programmed Start							
For F17 (2 ft), F25 (3 ft), F32 (4 ft) Lamps							
	75952	GE132-MVPS-L	1 F32T8 120V-277V Low Watts .71 BF <10% THD UltraStart®	11-2			10
	75953	GE132-MVPS-N	1 F32T8 120V-277V Normal Light .88 BF <10% THD UltraStart®	11-3			10
	75954	GE132-MVPS-H	1 F32T8 120V-277V High Light 1.18 BF <10% THD UltraStart®	11-4			10
	96714	GE232-MVPS-N	2 or 1 – F32T8 120V-277V Normal Light .88 BF <10% THD UltraStart®	11-5			10
	96720	GE232-MVPS-L	2 or 1 – F32T8 120V-277V Low Watts .71 BF <10% THD UltraStart®	11-5			10
	29675	GE-232-MVPS-H	2 – F32T8 120V-277V High Light 1.15 BF <10% THD UltraStart®	11-6	29651		10
	29671	GE-232-MVPS-XL	2 – F32T8 120V-277V Ultra Low Watt .60 BF <10% THD	11-7			10
	29676	GE-332-MVPS-H	3 – F32T8 120V-277V High Light 1.15 BF <10% THD UltraStart®	11-8			10
	96715	GE332-MVPS-N	3 – F32T8 120V-277V Normal Light .88 BF <10% THD UltraStart®	11-9			10
	96721	GE332-MVPS-L	3 – F32T8 120V-277V Low Watts .71 BF <10% THD UltraStart®	11-9			10
	29672	GE-332-MVPS-XL	3 – F32T8 120V-277V Ultra Low Watt .60 BF <10% THD	11-10			10
	29625	GE-432-120-PS-N	4 – F32T8 120V Normal Light .87 BF <10% THD UltraStart®	11-10	29635		10
	96716	GE432-MVPS-N	4 – F32T8 120V-277V Normal Light .88 BF <10% THD UltraStart®	11-11			10
	71832	GE432-MVPS-L	4 – F32T8 120V-277V Low Watts .71 BF <10% THD UltraStart®	11-11			10
	74476	GE-432-MVPS-H	4 – F32T8 120V-277V High Light 1.15 BF <10% THD Ultra-Start®	11-12	74477		8
	62721	GE232PS347-L	2 or 1 F32T8 347V Low Watt .71 BF UltraStart®	11-13			10
	62722	GE432PS347-L	4 or 3 F32T8 347V Low Watt .71 BF UltraStart®	11-14			10
	62723	GE232PS347-N	2 or 1 F32T8 347V Normal Light .88 BF UltraStart®	11-15			10
	62724	GE332PS347-N	3 F32T8 347V Normal Light .88 BF UltraStart®	11-16			10
	62725	GE432PS347-N	4 F32T8 347V Normal Light .88 BF UltraStart®	11-17			10
	62726	GE232PS347-H	2 or 1 F32T8 347V High Light 1.18 BF UltraStart®	11-18			10
	62727	GE332PS347-H	3 F32T8 347V High Light 1.18 BF UltraStart®	11-19			10
	63041	GE332PS347-L	2 or 1 F32T8 347V High Light 1.18 BF UltraStart®	11-20			10

See page E-1 for warranty information.

	Std Pack Prod Code	Description	Application	Product Page Number	Pallet Pack	DIY Pack	Std Pack Units Per Carton
T8 Fluorescent Ballasts (continued)							
T8/T5 DIMMING BALLASTS							
UltraStart® T8 Step Dimming Program Start Dimming							
	68966	GE132-MVPS-N-S30	1 F32T8 120-277V "N" .88 BF UltraStart® 100/30% Bi-level Switching	12-5			10
	68968	GE232-MVPS-L-S30	2 or 1 F32T8 120-277V "L" .78 BF UltraStart® 100/30% Bi-level Switching	12-6			10
	68967	GE232-MVPS-N-S30	2 or 1 F32T8 120-277V "N" .88 BF UltraStart® 100/30% Bi-level Switching	12-7			10
UltraMax® Bi-Level Dimming & Load Shed Dimming Instant Start High-Efficiency							
	73233	GE232MAX90-S60	2 or 1 - F32T8 120 to 277 "H" 1.18 BF UltraMax® 100/60% step dim	12-8			10
	73231	GE332MAX90-S60	3 - F32T8 120 to 277 "H" 1.18 BF UltraMax® 100/60% step dim	12-9			10
	73229	GE432MAX90-S60	4 - F32T8 120 to 277 "H" 1.18 BF UltraMax® 100/60% step dim	12-10			10
	71497	GE632MAX-H90-S60	6, 5, 4 - F32T8 120 to 277 "H" 1.18 BF UltraMax® 100/60% step dim	12-11			10
	73234	GE232MAX90-V60	2 or 1 - F32T8 120 to 277 "H" 1.18 BF UltraMax® 0-10V 100-60% dim	12-12			10
	73232	GE332MAX90-V60	3 - F32T8 120 to 277 "H" 1.18 BF UltraMax® 0-10V 100-60% dim	12-13			10
	73230	GE432MAX90-V60	4 - F32T8 120 to 277 "H" 1.18 BF UltraMax® 0-10V 100-60% dim	12-14			10
	71731	GE632MAX-H90-V60	6 or 5 - F32T8 120 to 277 "H" 1.18 BF UltraMax® 0-10V 100-60% dim	12-15			10
UltraStart® T8 100-3% 0–10V / 120–277V Programmed Start Dimming							
	75379	GE132MVPS-N-V03	1 - F32T8 120-277V "N" .88 BF UltraStart® 0-10V Dimming 100-3%	12-16			10
	75380	GE232MVPS-N-V03	2 - F32T8 120-277V "N" .88 BF UltraStart® 0-10V Dimming 100-3%	12-17			10
	75381	GE332MVPS-N-V03	3 - F32T8 120-277V "N" .88 BF UltraStart® 0-10V Dimming 100-3%	12-18			10
	75382	GE432-MVPS-N-V03	4 - F32T8 120-277V "N" .88 BF UltraStart® 0-10V Dimming 100-3%	12-19			10
	75383	GE232-MVPS-H-V03	2 or 1 - F32T8 120-277V "H" 1.18 BF UltraStart® 0-10V Dimming 100-3%	12-20			10
	75384	GE332MVPS-H-V03	3 - F32T8 120-277V "H" 1.18 BF UltraStart® 0-10V Dimming 100-3%	12-21			10
	75385	GE432-MVPS-H-V03	4 - F32T8 120-277V "H" 1.18 BF UltraStart® 0-10V Dimming 100-3%	12-22			10
	62044	GE432MVPS-N-V03W	3 - F32T8 120-277V "N" .88 BF UltraStart® 0-10V Dimming 100-3%	12-23			10
UltraStart® T5 120–277V Step Dimming Program Start							
	90903	GE228MVPS-N-S35	2 or 1 F28T5HE Lamps	12-24			10
	90904	GE224MVPS-N-S35	2 or 1 F24T5HO Lamps	12-25			10

See page E-1 for warranty information.

Quick reference ballast selection guide (cont.)

	Std Pack Prod Code	Description	Application	Product Page Number	Pallet Pack	DIY Pack	Std Pack Units Per Carton
T5 Fluorescent Ballasts							
T5 ELECTRONIC PROGRAMMED START BALLASTS							
T5 High Efficiency – Rapid Start 120V Residential Ballast							
For F13T5, F14T5, F21T5 and F28T5							
	78518	GE21T5-120-RES	Electronic ballast for (1) F21T5; or (1) F14T5; or (1) F13T5	13-3			
	78811	GE28T5-120-RES	Electronic ballast for (1) F28T5; or (1) F21T5; or (1) F14T5	13-3			
	80021	GE28T5/2-120-RES	Electronic ballast for (2) F28T5; or (2) F21T5; or (2) F14T5	13-3			
T5 High Efficiency Programmed Start							
For F14 (2 ft), F21 (3 ft), F28 (4 ft), F35 (5 ft) HE T5 Lamps							
	68994	GE228MVPS-MC-H	2 – F21-F28T5HE, 120 to 277 UltraStart® PRS High Light 1.15 BF A Can	13-4			10
	68993	GE228MVPS-MC	2 or 1 – F14-F28T5HE, 120 – 277 UltraStart® PRS Normal Light - .95 BF A Can	13-4			10
T5 High Output Programmed Start							
For HO T5 Lamps							
	68976	GE224MVPS-N	2 – F24T5HO PRS UNV 50/60 Hz C Can	13-5			10
	47540	B239PUNV-DOG1C	2 – F39T5HO PRS UNV 50/60 Hz D Can	13-5			10
	67562	GE254MVPS90-A	2 or 1 – F54T5HO 120 to 277 UltraStart® PRS High Temp A Can	13-6			10
	33957	GE254MVPS-D-1	2 or 1 – F54T5HO 120 to 277V UltraStart® PRS High Temp D Can	13-7			10
	94131	GE454MVPS90-E-S	4/2 – F54T5HO 120 to 277 UltraStart® PRS High Temp E Can	13-8			10
	67566	GE454MVPS90-F	4-1 – F54T5HO 120 to 277 UltraStart® PS F Can	13-9			
	72280	GE180MVPS-D	1 – F80T5HO 120 to 277 UltraStart® PRS D Can	13-10			10
	62728	GE254PS347/480-F	2 or 1 – F54T5HO 347 to 480V PS High Temp F Can LFL	13-11			10
	62729	GE254PS347-F	2 or 1 – F54T5HO 347V F Can LFL	13-12			10
	62730	GE454PS347/480-E	4-1 - F54T5HO 347 to 480V High Temp E Can LFL	13-13			8
	62731	GE454PS347-E	4-1 - F54T5HO 347V LFL E Can	13-14			8
T5 lamp lengths are noted to nearest foot and are not exact lengths as noted in feet. See GE Lamp Catalog for exact lamp length.							
Step Down Transformers from 480V to Universal Voltage Ballasts							
	74119	GETR480/277-250W	Non-Isolated Autotransformer 480 to 277V, <250 Watts (VA), A can	13-15			10
	74120	GETR480/277-375W	Non-Isolated Autotransformer 480 to 277V, <375 Watts (VA), F can	13-15			10
	85857	GETR277/120-175W	Non-Isolated Autotransformer 277 to 120V, <175 Watts (VA), A Can	13-16			6
	90896	GETR347/277-375W	Non-Isolated Autotransformer 347 to 277V, <375 Watts (VA), F Can	13-16			6
T12 Fluorescent Ballasts							
T12 ELECTRONIC BALLASTS							
ProLine® T12							
For F20 (2 ft), F30 (3 ft), and F34/F40 (4 ft) T12 Lamps							
	74472	GE240PS-MV-N	2 or 1 – F40 or F34T12 Rapid Start 120 to 277 "N" BF ProLine® T12	14-3		74473	Std. Pack
For T12 4 ft – 8 ft Slimline Lamps							
	74474	GE-260IS-MV-N	2 or 1 – F96T12 Instant Start 120 to 277	14-4		74475	10
T12 HIGH OUTPUT							
	35727	GE296HO-MVPS-N	2 or 1 – F96T12 HO RS 120 to 277 Multivolt ProLine®	14-5		72109	Std. Pack

See page E-1 for warranty information.

	Std Pack Prod Code	Description	Application	Product Page Number	Pallet Pack	DIY Pack	Std Pack Units Per Carton
Magnetic Ballasts							
For Preheat T12 and T8 Lamps, Circleline T9, Straight T12 and T8 Lamps and 2 Pin CFL Lamps							
	68186	GEM120PH120DIY	1 – F20T12, F15T8, F1512, F14T8, F18T8, 120V Magnetic Ballast (200H2)	15-2		68186	
	68187	GEM120TC120DIY	1 – F20T12, F15T8, F15T12, F14T12, 120V, Magnetic Ballast (546BTCP)	15-2		68187	
	68190	GEM1FC16T9RS120	2 – FC12T9, FC16T9, FC8T9, FC12T9, 120V, Magnetic (726VLHWSTCP)	15-3		68190	
	68193	GEM1FC8T9RS120IP	1 – FC8T9, FC6T9, RS, 120V, Magnetic Ballast (547RSWSTCP)	15-4		68193	IP Pack
	68191	GEM1FC8T9RS120DI	1 – FC89T, RS, 120V Magnetic Ballast (547RSWSTCP)	15-4		68191	IP Pack
	68192	GEM220TS120DIY	2– F20T12, F15T8, F15T12, F14T12, 120V, Magnetic Ballast (447LRVLHTCP)	15-5		68192	
	68188	GEM1CF13PH120	120V Magnetic Ballast For one 2 Pin 13W CFL Lamp	15-5		68188	IP Pack
FLUORESCENT ACCESSORIES							
Starters							
	64818	FS-2-C/TP	Starters for 14, 15 & 20 Watt Flu. Lamps	15-6			6
	64819	FS-4-C/TP	Starters for 30 & 40 Watt Flu. Lamps	15-6			6
	64820	FS-25-C/TP	Starters for 22 & 25 Watt Flu. Lamps	15-6			6
	64821	FS-5-C/TP	Starters for 4, 6 & 8 Watt Flu. Lamps	15-6			6
Sockets							
	64822	BP-LP/TP	Low Profile Socket Set for Bi-Pin Flu. Lamps	15-6			7
	64823	BP/TP	Socket Set for Bi-Pin Flu. Lamps	15-6			7
	64824	BP-FM/TP	Face Mount Socket Set for Bi-Pin Flu. Lamps	15-6			7
	64825	SL-SS/TP	Socket Set for Slimline Flu. Lamps	15-6			3
Sign Ballasts							
For T12 High Output Lamps							
	72103	GESB-0412-12-IP	T12HO Sign ballast, 4 to 12 ft, 1 to 2 lamps	16-3			10
	72104	GESB-0620-24-IP	T12HO Sign ballast 6 to 20 ft, 2 to 4 lamps	16-3			10
	72105	GESB-1224-24-IP	T12HO Sign ballast 12 to 24 ft, 2 to 4 lamps	16-4			10
	72106	GESB-1240-46-IP	T12HO Sign Ballast 12 to 40 ft, 4 to 6 lamps	16-4			10
	72107	GESB-2040-24-IP	T12HO Sign Ballast 20 to 40 ft, 2 to 4 lamps	16-5			10
	72108	GESB-2448-46-IP	T12HO Sign Ballast 6 to 12 ft, 4 to 6 lamps	16-5			10
	88921	USB-0412-12-IP	4 to 12 ft, 1 to 2 lamps	16-6			10

See page E-1 for warranty information.

Quick reference ballast selection guide (cont.)

	Prod Code	Description	Application	Product Page Number				Units Per Carton
Compact Fluorescent Ballasts								
ProLine® CFL Electronic Ballasts								
For 13 – 70W T4 CFL Lamps								
	63091	GEC213-MVPS-BES	2 or 1 – CFQ13W/G24q 120-227V ProLine® PS	17-6				10
	63092	GEC213-MVPS-SE	2 or 1 – CFQ13W/G24q 120-227V ProLine® PS	17-6				10
	63089	GEC213-MVPS-3W	2 or 1 – CFQ13W/G24q 120-227V ProLine® PS	17-6				10
	63094	GEC218-MVPS-BES	2 or 1 – CFQ18W/G24q 120-227V ProLine® PS	17-7				10
	63096	GEC218-MVPS-SE	2 or 1 – CFQ18W/G24q 120-227V ProLine® PS	17-7				10
	63093	GEC218-MVPS-3W	2 or 1 – CFQ18W/G24q 120-227V ProLine® PS	17-7				10
	63098	GEC226-MVPS-BES	2 – CFQ26W, FT24 or 1 – 24W CFTR32 120-227V ProLine® PS	17-8				10
	63099	GEC226-MVPS-SE	2 – CFQ26W, FT24 or 1 – 24W CFTR32 120-227V ProLine® PS	17-8				10
	63097	GEC226-MVPS-3W	2 – CFQ26W, FT24 or 1 – 24W CFTR32 120-227V ProLine® PS	17-8				10
	63101	GEC242-MVPS-BES	2 – 42/36/32/28/26/24 watt 120-277V Proline® PS	17-9				10
	63102	GEC242-MVPS-SE	2 – 42/36/32/28/26/24 watt 120-277V Proline® PS	17-9				10
	63100	GEC242-MVPS-3W	2 – 42/36/32/28/26/24 watt 120-277V Proline® PS	17-9				10
High-Lumen UltraMax® and UltraStart® Ballasts for 40W, 28W, and 25W Biax®								
	75948	GEC140MAX-A	1 – FT40W-25W/2G11 Biax®- 120-277V UltraMax® Instant Start	17-10				10
	71435	GEC240MAX-A	2 or 1 – FT40W-25W/2G11 Biax®- 120-277V UltraMax® Instant Start	17-11				10
	71436	GEC340MAX-A	3 – FT40W-25W/2G11 Biax® - 120-277V UltraMax® Instant Start	17-12				10
	71437	GEC240MVPS-A	2 or 1 – FT40W/2G11 Biax®- 120-277V UltraStart® Programmed Start	17-13				10
	75950	GEC225MVPS-A	2 or 1 – FT25W/2G11 Biax®- 120-277V UltraStart® Programmed Start	17-13				10
CFL Magnetic Ballasts								
For 5 – 26W Preheat CFL Lamps								
	87533	GEM1CF13PH120	1 – CFT/Q13W/GX23 Preheat 120 (4111H2P)	17-14				10

See page E-1 for warranty information.

	Prod Code	Description	Application	Product Page Number	ANSI Lamp Type	Circuit Type	Units Per Carton
HID Electronic Ballasts							
For 20 – 150W Pulse Start HID Lamps							
	74115	GEMH20-MC-120	1 – 20W M156 or C156 120V Micro Electronic HID	18-5	M156	Electronic	10
	87490	GEMH20-MLF-120	1 – 20W M156 or C156 120V Electronic HID	18-5	M156	Electronic	12
	63042	GEMH20-MSJ-MV	1-20W M156/C156 120-277V Low frequency Electronic HID	18-6	C156	Electronic	10
	63043	GEMH20-MSF-MV	1-20W M156/C156 120-277V Low frequency Electronic HID	18-6	C156	Electronic	10
	63044	GEMH39-MSJ-MV	1-39W M130/C130 120-277V Low Frequency Electronic HID	18-7	C130, M130	Electronic	10
	63045	GEMH39-MSF-MV	1-39W M130/C130 120-277V Low Frequency Electronic HID	18-7	C130, M130	Electronic	10
	74116	GEMH39-MC-120	1 – 39W M130 or C130 120V Micro Electronic HID	18-8	M130	Electronic	10
	75378	GEMH39-MCM-120	1 – 39W M130 or C130 120V Micro Electronic HID Metal Can	18-8	M130	Electronic	10
	87501	GEMH39-MSF-120	1 – 39W M130 or C130 120V Electronic HID	18-9	M130	Electronic	10
	87531	GEMH70-MSF-120	1 – 70W, M98, M/C143, 120V Electronic HID	18-9	M98, M143, M139, C143, C139	Electronic	10
	94135	GEMH70-MSLF-120	1 - 70W, M98/C98, M139/C139, 120V Electronic HID	18-10	M98/C98, M139/ C139	Electronic	10
	87546	GEMH70-SLJ-MV	1 – 70W, M98, M/C143, 120V Electronic HID	18-10	M98, M143, M139, C143, C139	Electronic	10
	87561	GEMH100-SLJ-MV	1 – 100W, M90, M/C140, 120V-277V Electronic HID	18-11	M90, M140	Electronic	10
	87576	GEMH150-SLJ-MV	1 – 150W, M102, M/C142, 120V-277V Electronic HID	18-11	M102, M142	Electronic	10
HID Electromagnetic Ballasts							
Metal Halide							
For 20 – 175W Metal Halide HID Lamps							
	86824	GEM50MLTLC3D-5	1 – 50W MH M110 or M148 Quad (120/208/240/277V)	18-12	M110, M148	HX-HPF	6
	86847	GEM70MLTLC3D-5	1 – 70W MH M98 or M143 Quad (120/208/240/277V)	18-12	M98, M143	HX-HPF	6
	78517	GEM70TRILC3-5	1 – 70W MH M143 Tri Tap (120/277/347V)	18-13	M143	HX-HPF	6
	67337	GEM7048TLA3D-5/2	1 – 70W MH M98 or M143 480	18-13	M98	HX-HPF	
	86675	GEM100MLTLC3D-5	1 – 100W MH M90 or M140 Quad (120/208/240/277V)	18-14	M92, M90, M140	HX-HPF	6
	78519	GEM100TRILC3-5	1 – 100W M140 Tri Tap (120/277/347V)	18-14	M140	HX-HPF	6
	67333	GEM10048TLA3D-5/2	1 – 100W MH M90 or M140 480	18-15	M90, M140	HX-HPF	6
	86718	GEM150MLTLC3D-5	1 – 150W MH M102 or M142 Quad (120/208/240/277V)	18-15	M142, M102	HX-HPF	6
	78520	GEM150TRILC3-5	1 – 150W M102 Tri Tap (120/277/347V)	18-16	M102	HX-HPF	6
	86711	GEM15048TLC3D-5	1 – 150W MH M102 or M142 480	18-16	M102, M142	HX-HPF	6
	87210	GEM175ML5AC3-5	1 – 175W MH M57 5-Tap (120/208/240/277/480V)	18-17	M57, M109	CWA	6
	86741	GEM175MLTAC3-5	1 – 175W MH M57 Quad (120/208/240/277V)	18-17	M57, M107	CWA	6
	78521	GEM175TRIAC3-5	1 – 175W MH M57 Tri Tap (120/277/347V)	18-18	M57	CWA	6

See page E-1 for warranty information.

Quick reference ballast selection guide (cont.)

Prod Code	Description	Application	Product Page Number	ANSI Lamp Type	Circuit Type	Units Per Carton
HID Electromagnetic Ballasts (continued)						
Metal Halide (continued)						
For 250 – 1500W Metal Halide HID Lamps						
87211	GEM250ML5AC3-5	1 – 250W MH M58 5-Tap (120/208/240/277/480V)	18-19	M58	CWA	6
86765	GEM250MLTAC3-5	1 – 250W MH M58 Quad (120/208/240/277V)	18-19	M58	CWA	6
78522	GEM250TRIAC4-5	1 – 250W M58 Tri Tap (120/277/347V)	18-20	M58	CWA	6
87212	GEM250ML5AC4-5	1 – 250W MH M58 or 5-Tap (120/208/240/277/480V)	18-20	M58	CWA	3
78523	GEM400TRIAC4-5	1 – 400W M59 Tri Tap (120/277/347V)	18-21	M59	CWA	3
72300	GEM400ML5AA4-5/2	1 – 400W M59 5-Tap (120/208/240/277/480V Al C&C	18-21	M59	CWA	3
72149	GEM400MLTAA4-5	1 – 400W MH M59 Quad (120/208/240/277V) Al C&C	18-22	M59	CWA	3
63070	GEM40048TAA4 – 5/2	1 – 400W MH M59 480	18-22	M59	CWA	3
63069	GEM100048TAC5-5/2	1 – 1000W MH M47 480	18-23	M47	CWA	2
87213	GEM1000ML5AA5-5/2	1 – 1000W MH M47 5-Tap (120/208/240/277/480V)	18-23	M47	CWA	2
86655	GEM1000MLTAA5-5/2	1 – 1000W MH M47 Quad (120/208/240/277V)	18-24	M47	CWA	2
78524	GEM1000TRIAC5-5	1 – 1000W MH M47 Tri Tap (120/277/347V)	18-24	M47	CWA	2
86693	GEM150048TAC5M5-5	1 – 1500W MH M48 480	18-25	M48	CWA	2
86698	GEM1500MLTAC5-5	1 – 1500W MH M48 Quad (120/208/240/277V)	18-25	M48	CWA	2
Pulse Start						
For 175 – 1000W Pulse Start Metal Halide HID Lamps						
67335	GEP175MLTACA3-5/2	1 – 175W PS M137 or M152 Quad (120/208/240/277V)	18-26	M152, M137	Pulse Start CWA	6
78525	GEP175TRIAC3-5	1 – 175W PS M137 Tri Tap (120/277/347V)	18-26	M137	Pulse Start CWA	6
67334	GEP17548TAA3-5/2	1 – 175W PS M137 or M152 480	18-27	M152, M137	Pulse Start CWA	6
78526	GEP200TRIAC3-5	1 – 200W PS M136 Tri Tap (120/277/347V)	18-27	M136	Pulse Start CWA	6
67344	GEP250MLTAA4-5/2	1 – 250W PS M138 or M153 Quad (120/208/240/277V)	18-28	M153, M138	Pulse Start CWA	3
78527	GEP250TRIAC4-5	1 – 250W PS M138 Tri Tap (120/277/347V)	18-28	M138	Pulse Start CWA	3
67336	GEP25048TAA4-5/2	1 – 250W PS M138 or M153 480	18-29	M153, M138	Pulse Start CWA	3
67345	GEP320MLTAA4-5/2	1 – 320W PS M132 or 154 Quad (120/208/240/277V)	18-29	M154, M132	Pulse Start CWA	3
78528	GEP320TRIAC4-5	1 – 320W PS M132 Tri Tap (120/277/347V)	18-30	M132	Pulse Start CWA	6
67342	GEP32048TAC4-5/2	1 – 320W PS M132 or M154 480	18-30	M154, M132	Pulse Start CWA	3
67346	GEP350MLTAA4-5/2	1 – 350W PS M131 Quad (120/208/240/277V)	18-31	M131	Pulse Start CWA	3
78529	GEP350TRIAC4-5	1 – 350W PS M131 Tri Tap (120/277/347V)	18-31	M131	Pulse Start CWA	3
67341	GEP40048TAA4-5/2	1 – 400W PS M135 or M155 480	18-32	M155, M135	Pulse Start CWA	3
67347	GEM400MLTAA4-5/2	1 – 400W PS M59 Quad (120/208/240/277V)	18-32	M59	Pulse Start CWA	3
78530	GEP400TRIAC4-5	1 – 400W PS M135 Tri Tap (120/277/347V)	18-33	M135	Pulse Start CWA	3
67343	GEP75048TAA5-5/2	1 – 750W PS M149 480	18-33	M149	Pulse Start CWA	2
67350	GEP750MLTAA5-5/2	1 – 750W PS M149 Quad (120/208/240/277V)	18-34	M149	Pulse Start CWA	2
78531	GEP750TRIAC5-5	1 – 750W PS M149 Tri Tap (120/277/347V)	18-34	M149	Pulse Start CWA	2
67348	GEP1000MLTAA5-5/2	1 – 1000W PS M141 Quad (120/208/240/277V)	18-35	M141	Pulse Start CWA	2
78532	GEP1000TRIAC5-5	1 – 1000W PS M141 Tri Tap (120/277/347V)	18-35	M141	Pulse Start CWA	2
67349	GEP1000ML5AA5-5/2	1 – 1000W PS M141 5-Tap (120/208/240/277/480V)	18-36	M141	Pulse Start CWA	2

See page E-1 for warranty information.

	Prod Code	Description	Application	Product Page Number	ANSI Lamp Type	Circuit Type	Units Per Carton
HID Electromagnetic Ballasts (continued)							
High Pressure Sodium							
For 50 – 150W High Pressure Sodium HID Lamps							
	87152	GES50MLTLC3D-5	1 – 50W HPS S68 Quad (120/208/240/277V)	18-37	S68	HX-HPF	6
	78533	GES50TRILC3-5	1 – 50W HPS S68 Tri Tap (120/277/347V)	18-37	S68	HX-HPF	2
	86587	GES70MLTLA3D-5	1 – 70W HPS S62 Quad (120/208/240/277V)	18-38	S62	HX-HPF	6
	78534	GES70TRILC3-5	1 – 70W HPS S62 Tri Tap (120/277/347V)	18-38	S62	HX-HPF	2
	67340	GES7048TLA3D-5/2	1 – 70W HPS S62 480V	18-39	S62	HX-HPF	6
	87074	GES100MLTLC3D-5	1 – 100W HPS S54 Quad (120/208/240/277V)	18-39	S54	HX-HPF	6
	78535	GES100TRILC3-5	1 – 100W HPS S54 Tri Tap (120/277/347V)	18-40	S54	HX-HPF	6
	67338	GES10048TLA3D-5/2	1 – 100W HPS S54 480V	18-40	S54	HX-HPF	6
	87094	GES150MLTLC3D-5	1 – 150W HPS S55 Quad (120/208/240/277V)	18-41	S55	HX-HPF	6
	78536	GES150TRILC3-5	1 – 150W HPS S55 Tri Tap (120/277/347V)	18-41	S55	HX-HPF	6
	67339	GES15048TLA3D-5/2	1 – 150W HPS S55 480V	18-42	S55	HX-HPF	6
For 250 – 1000W High Pressure Sodium HID Lamps							
	87214	GES250ML5AA4-5	1 – 250W HPS S50 5-Tap (120/208/240/277/480V)	18-43	S50	CWA	3
	87121	GES250MLTAC4-5	1 – 250W HPS S50 Quad (120/208/240/277V)	18-43	S50	CWA	3
	78537	GES250TRIAC4-5	1 – 250W HPS S50 Tri Tap (120/277/347V)	18-44	S50	CWA	3
	63066	GES400ML5AA4-5	1 – 400W HPS S51 5-Tap (120/208/240/277/480V)	18-44	S51	CWA	3
	87164	GES400MLTAC4-5	1 – 400W HPS S51 Quad (120/208/240/277V)	18-45	S51	CWA	3
	78539	GES400TRIAC4-5	1 – 400W HPS S51 Tri Tap (120/277/347V)	18-45	S51	CWA	3
	87198	GES40048TAC4-5	1 – 400W HPS S51 480V in smaller frame	18-46	S51	CWA	3
	67351	GES100048TAA5-5/2	1 – 1000W HPS S52 480V	18-46	S52	CWA	2
	87218	GES1000ML5AA5-5	1 – 1000W HPS S52 5-Tap (120/208/240/277/480V)	18-47	S52	CWA	2
	67352	GES1000MLTAA5-5/2	1 – 1000W HPS S52 Quad (120/208/240/277V)	18-47	S52	CWA	2
	78540	GES1000TRIAC5-5	1 – 1000W HPS S52 Tri Tap (120/277/347V)	18-48	S52	CWA	2
High Intensity Discharge Lamp and Ballast Kits							
	71701	GEM175ML5AC3-55	1 – 175W MH M57 5-Tap (120/208/240/277/480V) Lamp & Ballast Kit (-55)	18-49	M57, M109	CWA	6
	71702	GEM250ML5AC3-55	1 – 250W MH M58 5-Tap (120/208/240/277/480V) Lamp & Ballast Kit (-55)	18-49	M58	CWA	6
	71703	GEM400ML5AC4-55	1 – 400W MH M59 5-Tap (120/208/240/277/480V) Lamp & Ballast Kit (-55)	18-50	M59	CWA	3
	71704	GEM1000ML5AC4-55	1 – 1000W MH M47 5-Tap (120/208/240/277/480V) Lamp & Ballast Kit (-55)	18-50	M47	CWA	2
	71705	GES100MLTLC3D-55	1 – 100W HPS S54 Quad (120/208/240/277V) Lamp & Ballast Kit (-55)	18-51	S54	HX-HPF	6
	71706	GES250ML5AC4-55	1 – 250W HPS S50 5-Tap (120/208/240/277/480V) Lamp & Ballast Kit (-55)	18-51	S50	CWA	3
	71707	GES400ML5AC4-55	1 – 400W HPS S51 5-Tap (120/208/240/277/480V) Lamp & Ballast Kit (-55)	18-52	S51	CWA	3

See page E-1 for warranty information.

Quick reference ballast selection guide (cont.)

	Prod Code	Description	Application	Product Page Number	ANSI Lamp Type	Circuit Type	Units Per Carton
HID Electromagnetic Ballasts (continued)							
HID Metal Halide F-Can							
	86576	11210277CTC000C	1 – 70W M85 120/277 Enclosed & Potted F-Can	18-53	M85	HX-HPF	4
	63047	GEM70MVR-F	1 – 70W M98 120/277 Enclosed & Potted F-Can	18-53	M98	HX-HPF	4
	63048	GEMH100MVR-F	1 – 100W M90 120/277 Enclosed & Potted F-Can	18-54	M90	HX-HPF	4
	63049	GEMH150MVR-F	1 – 150W MH 120/277 Enclosed & Potted F-Can	18-54	M102	HX-HPF	2
	63050	GEMH175MVA-F	1 – 175W M57 120/277 Enclosed & Potted F-Can	18-55	M57, H39	CWA	2
	63051	GEMH250MVA-F	1 – 250W M58 120/277 Enclosed & Potted F-Can	18-55	M58, H37	CWA	2
	63052	GEMH400MVA-F	1 – 400W M59 120/277 Enclosed & Potted F-Can	18-56	M59, H39	CWA	2
	80728	1111-247SCTC000I	1 – 400W M59 120/277 Enclosed & Potted F-Can	18-56	M59, H33	CWA	4
HID - High Pressure Sodium F-Can							
	86596	12210237CTC000I	1 – 70W S62 120/277 E & P F-Can built-in starter	18-57	S62	HX-HPF	4
HID - High Pressure Sodium Reactor							
	86605	1233142U000I	1 – 70W S62 120 Reactor-NPF	18-58	S62	R-HPF, R-NPF	6
	86606	1233154U000I	1 – 150W S55 120 Reactor-NPF	18-58	S55	R-NPF	6
HID ACCESSORIES							
Replacement Ignitors for Pulse Start Lamps – (MH and HPS)							
	75440	MH100-3A MH350-1A	Ignitor for MH 30 50 70 100 Ignitor MH 150W, PS 175 250 320 350 400W	18-59			20
	75441	MH750-1B	Ignitor MH PS 750W	18-59			
	86635	HPS150-3A	Ignitor HPS 150 watts or less except 150W-S56	18-59			20
	86641	HPS400-3A	Ignitor HPS 200-400 watts & 150W S56	18-59			10
	75439	HPS1000-4B	Ignitor HPS 1000W, PS 1000W	18-59			
Other Accessories							
	47621	000-8724	HIDP Adjustable Mounting Bracket Hardware Kit	18-59			100
REPLACEMENT CAPACITORS							
	75433	005-1184-MF	10.0 MFD 400V 90C 2.4 MEG 1.50 oval 2.7 ht	18-59			20
	75668	005-2779-MF	24.0 MFD 480V 90C 1.75 oval 3.9 ht	18-59			20
	75429	GECAP-5/300V-D	Capacitor 5MFD 280V Dry	18-59			20
	75425	GECAP-6/280V-D	Capacitor 6MFD 280V Dry	18-59			20
	75430	GECAP-7/300V-D	Capacitor 7MFD 300V Dry	18-59			20
	75426	GECAP-8/280V-D	Capacitor 8MFD 280V Dry	18-59			20
	75433	GECAP-10/400V-O	Capacitor 10MFD 400V Oil	18-59			20
	75427	GECAP-12/280V-D	Capacitor 12MFD 280V Dry	18-59			20
	75669	GECAP-14/280V-D	Capacitor 14MFD 280V Dry	18-59			20
	75434	GECAP-15/400V-O	Capacitor 15MFD 400V Oil	18-59			20
	75428	GECAP-16/280V-D	Capacitor 16MFD 280V Dry	18-59			20
	75431	GECAP-21/345V-O	Capacitor 21MFD 345V Oil	18-59			20
	75432	GECAP-22.5/345V-O	Capacitor 22.5MFD 345V Oil	18-59			20
	75435	GECAP-24/400V-O	Capacitor 24MFD 400V Oil	18-59			20
	75668	GECAP-24/480V-O	Capacitor 24MFD 480V Oil	18-59			20
	75437	GECAP-26/525V-O	Capacitor 26MFD 525V Oil	18-59			20
	75436	GECAP-28/400V-O	Capacitor 28MFD 400V Oil	18-59			20
	75438	GECAP-32/525V-O	Capacitor 32MFD 525V Oil	18-59			20
	75422	GECAP-35/240V-D	Capacitor 35MFD 240V Dry	18-59			20
	75423	GECAP-55/240V-D	Capacitor 55MFD 240V Dry	18-59			20

See page E-1 for warranty information.

Incandescent Lamps

Bulb Identification

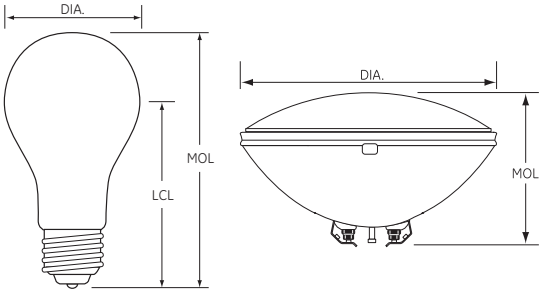

DIA: Diameter of bulb at widest point.

MOL: Maximum Overall Length including base or pins.

LCL: Distance between the center of the arc tube and the Light Center Length reference plane.

Note: Lamp drawings are not drawn to scale. Be sure to check size and dimension information when identifying each lamp.

To convert inches to millimeters, multiply the dimension (in inches) by 25.4 (i.e. 1.5" x 25.4 = 38.1 mm).

Filament Identification

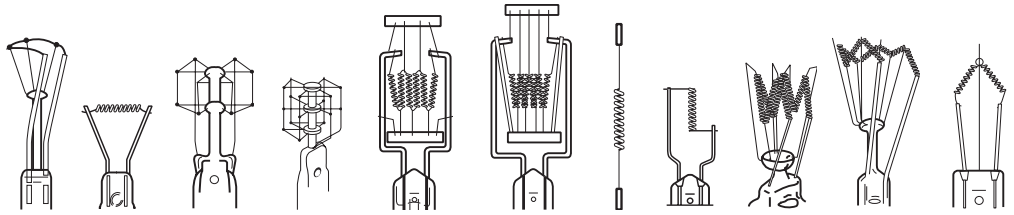

C-9 | C-6 CC-6 | C-17 | C-22 | C-13 | C-13D | C-8 CC-8 | C-8 CC-8 | C-5 | C-7A | C-2V CC-2V

Base Identification

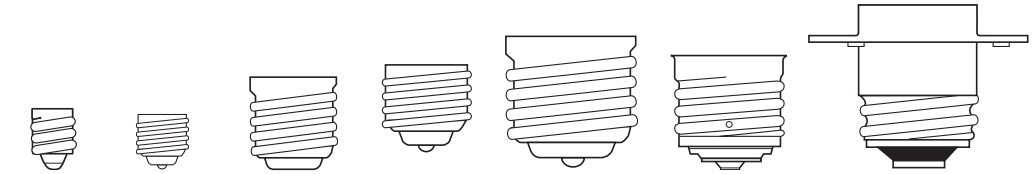

Cand Screw E12 | Intermediate E17 | 3 Contact Med E26 | Med Screw E26 | Mog Screw E39 | 3 Contact Mogul E39D | Mog Pf P40s

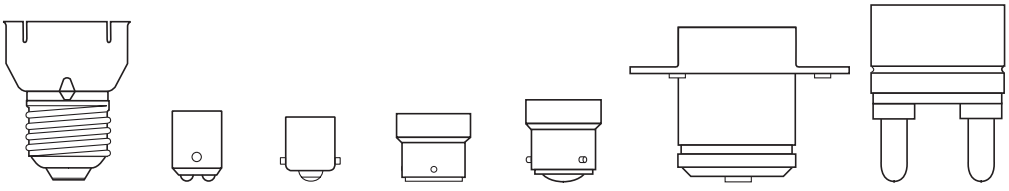

Med Skirt E26/50x39 | Can DC Bay | Can SC Bay B15 | 2-Lug Sleeve B22d | 3-Lug Sleeve B22-3 | MedPf P28s | Mogul BiPost G38

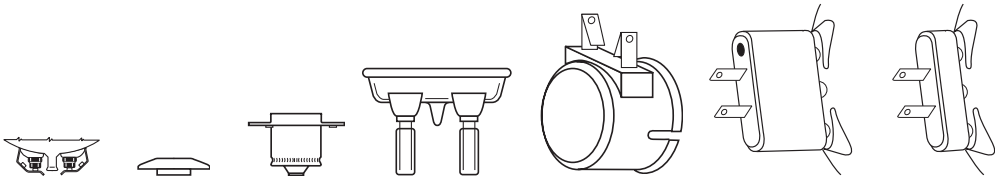

Screw Terminal | Disc Base | Single Contact Pf | Med BiPost | Med Side Pr | Ext. Mog End Pr GX16d | Mog End Pr GX16d

Lamp Locator

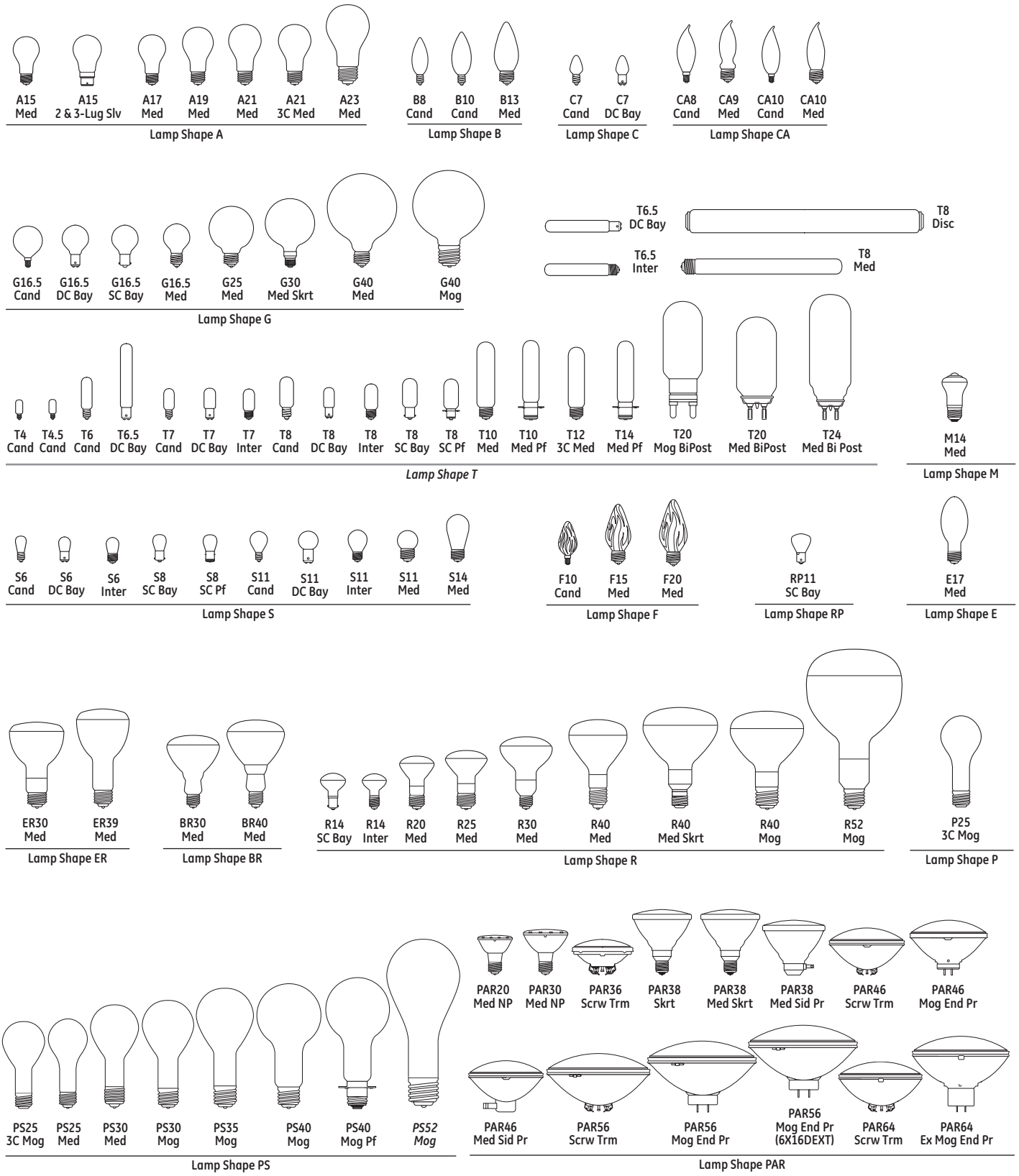

For the most up-to-date product information, see www.gelighting.com.

Incandescent Lamps

Introduction

GE's incandescent lamps trace their ancestry to the world's first practical electric bulb, invented by Thomas Alva Edison, founder in 1879 of the company that became General Electric Company.

More than a century of research and development later, the present range of GE incandescent lamps represents the state of the art of lamps for residential and commercial use, as well as special purpose lamps for decorative or display applications.

In an incandescent lamp, light is generated by heating the filament to incandescence. The hotter the filament, the more efficient it is in converting electricity to light. However, when the filament operates hotter, its life is shortened so the design of each lamp is a balance between efficiency and life. This is why lamps of equal wattage may have different lumen ratings and different life ratings.

Incandescent lamps of similar size are commonly available with different wattage ratings. The fixture wattage limit should not be exceeded.

Protection From Moisture

When Hard Glass appears in the Additional Information column, the outer bulbs are made of special thermal-shock-resistant glass. Sometimes external protection of the lamps is also needed to eliminate the chance of bulb breakage due to contact with water during operation. Footnotes will indicate when external protection is needed. Where Hard Glass is not indicated, the bulb glass is such that the lamps require protection from exposure to mist or condensation as well as direct contact with water during operation.

Rated Life

Values are based on a large number of representative lamps under controlled conditions. Individual lamps or groups of lamps will vary from the Rated Life shown. Rated Life is a median value of life expectancy – the total operating time at which under normal conditions 50% of any large group of initially installed lamps are expected to be still burning.

Incandescent Brand Name Cross-Reference

GE	OSRAM/SYLVANIA	PHILIPS
Reveal®	—	—
Bug-Lite	Bug Lite	Bug-A-Way®
covRguard®	Safeline	Silicone Coated
Saf-T-Gard®	—	—
Soft Pink	Soft Pink	Softone Pastels
Plant Light	Spot-GRO	Agro-Lite
Long Life Soft White	Double Life™ Soft White	Longer Life Soft White
Party Light	—	—
Watt-Miser®	Super Saver®	Econ-o-Watt®
Watt-Miser® Plus	Super Saver Excel®	Extended Service

ATTENTION: This brand-name cross-reference chart is provided only as a quick reference. Other lamp company brand listings may only represent a near equivalent, versus an identical match to GE brands. Individual lamp manufacturers' product offerings and performance specifications are subject to change at any time without notice. Lamp performance may be affected by environmental conditions, and/or auxiliary equipment.

Reveal®
A-line

GE Reveal® Light Bulbs

Superior light quality over regular incandescent that:

- Produces "clean, beautiful light®" for more vibrant colors
- Contains Neodymium glass that filters out dull yellow rays
- Is available in 40-150 watt A-Line
- Also available for nearly every application from candle shapes to flood lights
- A color-enhanced full-spectrum light bulb

GE Rough Service A-Line Bulbs

Built to last, even under many "rough" service conditions...

- Extra filament support design protects against early burnouts caused by bumps, jars and vibration
- Longer life
- Dual Voltage Rating (120V/130V) provides application flexibility
- Saf-T-Gard® coating available – coating is shatter and weather-resistant; resists breakage from heat and thermal shock that can occur from water, sleet, snow, molten solder and weld spatter

Long Life
BR30 Reflector
Floodlight or
Spotlight

GE Long Life Floodlight or Spotlight

- 25% longer life than standard reflectors. Ideal for use in high ceilings and hard-to-reach track lighting
- Easy replacement – same length and width as standard R bulbs
- Some lumen loss from standard reflectors (see listing for lumen values)
- Available in 45W floodlight and 65W floodlight and spotlight

Uses:

- Down lighting, display lighting, accent lighting, wall washing
- Wherever standard reflector bulbs are used

Headings in this catalog section

The following terms and descriptions can help you when checking Incandescent lamp specifications and when ordering products.

Within this product line, lamps are divided by wattage. Within wattage, lamps are listed alphabetically by bulb shape.

Bulb Shape: Bulb shape followed by its size (the maximum diameter of the bulb expressed in eighths of an inch).

Base: The type of base.

Energy Used-Nominal Watts: Energy Used (as defined by FTC Lamp Label Rules). To estimate energy consumption (kWh), multiply watts x hours of use and divide by 1000.

Order Code: It is important to use this five-digit code when ordering to ensure that you receive the exact product you require.

Description: The lamp's identification code.

Volts: Lamp data is based on operation at rated voltage.

Case Quantity: Number of product units packed in a case.

Filament Design: Filaments are designated by a letter combination in which C is a coiled wire filament, CC is a coiled wire that is itself wound into a larger coil, and SR is a straight ribbon filament. Numbers represent the type of filament-support arrangement.

MOL (in): Maximum Overall Length in inches.

LCL (in): Distance between the center of the filament and the Light Center Length reference plane, in inches.

Rated Life (hours): Life (as defined by FTC Lamp Label Rules) is rated life in hours.

Rated Life (years): Life (as defined by FTC Lamp Label Rules) is rated life in years.

Light Output – Lumens: Light output (as defined by FTC Lamp Label Rules) is rated average lumens.

Color Temperature – Kelvins (K): "Warmth" or "Coolness" of the lamp, measured in Kelvins (K). The higher the temperature, the cooler the appearance of the light.

Approximate CBCP (Center Beam Candlepower): For reflector-type lamps. Center Beam Candlepower is the intensity (candelas) at the center or maximum intensity of the beam.

Estimated Annual Operating Costs: Estimated yearly energy cost based on 3 hours/day, $0.11/kWh. Actual cost depends on rates and use.

Warning and Caution Notices: See page 1-20 for information.

Additional Information: Typical application and/or other important information.

Bulb Shape	Base	Watts	Order Code	Description	Volts	Case Qty	Filament Design	MOL (in)	LCL (in)	Rated Life (hrs)	Rated Life (yrs*)	Lumens Initial	Color Temp K	CBCP	Annual Operating Costs**	Warning and Caution Notices	Additional Information
Incandescent Lamps																	
3 Watts																	
S6	Cand	3	11098	75R30/FL/65WM/A	130	24	C-7A	1.87	1.37	3000	11						Clear-Indicator

75 R30 / FL / 65WM / A

- **75** – Identifies the lamp's wattage.
- **R30** – Identifies the lamp's shape.
- **FL** – Identifies the lamp as a floodlight.
- **65WM** – Identifies the lamp as a Watt-Miser®
- **A** – Identifies this lamp as amber colored.

WHEN YOU DON'T KNOW THE LAMP DESCRIPTION

1. Identify the lamp wattage.
2. Measure bulb diameter using ruler in appendix section page D-1 to determine width in eighths of an inch.
3. Identify base type using table on page 1-2.
4. Find your lamp in the table containing the bulb wattage, then match the shape, size and base, which are all listed alphabetically.

Incandescent Lamps

Bulb Shape	Base	Watts	Order Code	Description	Volts	Case Qty	Filament Design	MOL (in)	LCL (in)	Rated Life (hrs)	Rated Life (yrs*)	Lumens Initial	Color Temp K	CBCP	Annual Operating Costs**	Warning and Caution Notices	Additional Information
3 Watts																	
S6	Cand	3	11098	3S6/5 24PK	130	24	C-7A	1.87	1.37	3000		11					Clear-Indicator
4 Watts																	
C7	Cand	4	16001	4C7/W CD2	120	240	C-7A	2.12		3000						2e	White-Long Life Night Light
		4	43050	4C7 CARD 2	120	240	C-7A	2.12		3000						2e	Long Life Clear Night Light
		4	20572	4C7/S CD4	120	120	C-7A	2.12		2000						2e	Standard-Clear Night Light
		4	73257	4C7/S/CD4-6PK	120	6	C-7A	2.12		2000						2e	Standard-Clear Night Light
		4	20573	4C7/W/S CD4	120	120	C-7A	2.12		2000						2e	Standard-White Night Light
		4	73258	4C7/S/W/CD4-6PK	120	6	C-7A	2.12		2000						2e	Standard-Clear Night Light
		4	73259	4C7/PK/CD2-6PK	120	6	C-7A	2.12		3000						2e	Pink-Long Life Night Light
		4	26222	4C7/PK-CD2 6PK	120	240	C-7A	2.12		3000						2e	Pink-Long Life Night Light
		4	73260	4C7/BL/CD2-6PK	120	6	C-7A	2.12		3000						2e	Blue-Long Life Night Light
		4	26223	4C7/BL CD2 6PK	120	240	C-7A	2.12		3000						2e	Blue-Long Life Night Light
6 Watts																	
S6	Cand	6	11316	6S6 24PK	12	24	C-2V	1.87	1.37	1500		50					Clear-Indicator
		6	11329	6S6	24	240	C-2V	1.87	1.37	1500		50					Clear-Indicator
		6	11331	6S6 24PK	30	24	C-2V	1.87	1.37	1500		50					Clear-Train
		6	43397	6S6 BB	32	24	C-2V	1.87	1.37	1500		50					Clear-Train
		6	11367	6S6 TRAY	120	240	C-7A	1.87	1.37	1500		41					Clear-Indicator. 12-Lamp Tray
		6	11577	6S6/3	120	240	C-7A	1.87	1.37	5000		23					Clear-Signal Light
		6	15820	6S6 CARD2	120	240	C-7A	1.87	1.37	1500		41					Clear-Indicator
		6	11369	6S6 TRAY	130	240	C-7A	1.87	1.37	1500		41					Clear-Indicator, 12-Lamp Tray
		6	11372	6S6	145	240	C-7A	1.87	1.37	1500		38					Clear-Indicator
		6	11374	6S6	155	240	C-7A	1.87	1.37	1500		38					Clear-Indicator
S6	DC Bay	6	11357	6S6DC 24PK	75	24	C-7A	1.81	1.43	1500		45					Clear-Indicator
		6	11592	6S6DC TRAY	120	240	C-7A	1.81	1.43	1500		41					Clear-Indicator, 12-Lamp Tray
		6	11594	6S6/DC TRAY	130	240	C-7A	1.81	1.43	1500		41					Clear-Indicator, 12-Lamp Tray
		6	11609	6S6DC 24PK	145	24	C-7A	1.81	1.43	1500		41					Clear-Indicator, 12-Lamp Tray
S6	Inter	6	11660	6S6/7 TRAY 24PK	120	24	C-7A	1.81	1.06	1500		41					Clear-Indicator, 12-Lamp Tray
T4.5	Cand	6	11764	6T41/2/1	130	100	C-7A	1.87	1.31	1500		42					Clear-Indicator
7 Watts																	
C7	Cand	7	11779	7C7 TRAY	120	240	C-7A	2.12		3000		46					Clear-Indicator, 12-Lamp Tray
		7	11815	7C7/W TRAY	120	240	C-7A	2.12		3000		36					White-Indicator, 12-Lamp Tray
		7	11792	7C7 TRAY	130	240	C-7A	2.12		3000		46					Clear-Indicator, 12-Lamp Tray
7.5 Watts																	
S11	Med	8	11847	7 1/2S TRAY	120	240	C-9	2.25		1400		53				2e	Clear-12-Lamp Tray
		8	73261	71/2S/CW/CD-5PK	120	5	C-9	2.25		1400		39				2e	White
		8	41267	71/2S/CW CARD	120	240	C-9	2.25		1400		39				2e	White Night Light
		8	11848	7 1/2S TRAY	130	240	C-9	2.25		1400		53				2e	Clear-12-Lamp Tray
		8	11922	7 1/2S/CW TRAY	130	240	C-9	2.25		1400		39				2e	White-12-Lamp Tray
10 Watts																	
S6	Cand	10	12041	10S6/10	230	24	C-7A	1.87	1.37	1500		66					Clear-Indicator
		10	12050	10S6/10 24PK	250	24	C-7A	1.87	1.37	1500		66					Clear-Indicator
S6	DC Bay	10	12060	10S6/10DC 24PK	230	24	C-7A	1.87	1.87	1500		66					Clear-Indicator
S11	Cand	10	12249	10S11/79	120	120	C-7A	2.31	1.56	1000		80					Clear-Indicator
	Inter	10	12188	10S11N/F	120	120	C-7A	2.31	1.62	1000		79					Frost-Appliance

* Based on 3 hours per day use.
** Based on 3 hours per day use, $0.11 per Kwh

For the most up-to-date product information, see www.gelighting.com. To convert inches to millimeters, multiply by 25.4.
All warning and caution notices found at the end of this section (page 1-20).

Bulb Shape	Base	Watts	Order Code	Description	Volts	Case Qty	Filament Design	MOL (in)	LCL (in)	Rated Life (hrs)	Rated Life (yrs*)	Lumens Initial	Color Temp K	CBCP	Annual Operating Costs**	Warning and Caution Notices	Additional Information
Incandescent Lamps (continued)																	
15 Watts																	
A15	Med	15	97491	15A/W-2PK	120	24	C-9	3.50	2.37	2500		110					Soft-White
		15	12658	15A15	130	120	C-9	3.50	2.37	2500		115					Inside Frost
		15	97488	15A15/CL-2PK	120	24	C-9	3.50	2.37	2500		110					Clear
R14	SC Bay B15	15	33404	15R14SC/SP	12	120	CC-8	2.62		2000		120				5e	Reflector Spot
S11	Cand	15	13210	15S11/13	120	120	C-7A	2.25	1.56	750		115					Clear
S11	DC Bay	15	13188	15S11/3DC	75	120	C-9	2.37	1.25	1000		138					Clear-Train
S11	Med	15	13291	15S11/102	120	240	C-7A	2.25		400		120					Clear-Refrigerator, 12-Lamp Tray
T6	Cand	15	13390	15T6	120	60	C-7A	3.06	1.56	2000		107					Clear-Exit
		15	13402	15T6	145	60	C-7A	3.06	1.56	1500		102					Clear-Exit
		15	22114	15T6C-CD	145	120	C-7A	3.06	1.56	1500		102					Clear-Exit, Blister Card
T7	Cand	15	13494	15T7C	120	120	C-7A	2.25	1.50	3000		108					Clear-Signal Light, Appliance
T7	DC Bay	15	35154	15T7DC CARD	120	240	C-7A	2.25	1.31			108					Clear-Appliance, 12-Pack
T7	Inter	15	35153	15T7N CARD	120	240	C-7A	2.25	1.56			108					Clear-Appliance
T10	Med	15	34407	15T10 24PK	120	24	C-8	5.60		2500		120				5e, 9d	Clear - Aquarium Light Bulb
15/135/150 Watts																	
A21	Med	15/135/150	23068	15/150-SECURITY	120	60	C-2R/CC-8	5.25	3.87	1200	1.1	75/2080/2155	2800		$1.81/$16.26/$18.07	2b, 9c, 9j	Security 3-Way, Soft-White
18 Watts																	
S11	SC Bay BA15s	18	13655	18S11/1SC	10	120	CC-6	2.37	1.25	2000		200					Clear-Railway Signal Light
20 Watts																	
T6.5	DC Bay	20	34241	20T61/2DC/F	120	60	C-8	5.56		5000		90					Frost-Exit Light
T6.5	Inter	20	34272	20T61/2/F	120	60	C-8	5.50		7000		90					Frost-Exit Light
25 Watts																	
A19	Med	25	97478	25A/CL-2PK	120	24	CC-6	4.25	2.50	2500		215			$3.01		Clear
		25	97857	25A/CL/2PK-130V	130	24	CC-6	4.25	2.50	2500		215			$3.01		Clear
		25	97864	25A/2PK-130V	130	24	CC-6	4.25	2.50	2500		215			$3.01		Inside Frost
		25	97492	25A/W-2PK	120	24	CC-6	4.25	2.50	2500		210			$3.01		Soft White
		25	97765	25A/W-2/10PK	120	20	CC-6	4.25	2.50	2500		210			$3.01		Soft White
		25	16333	25A/TP-CD 6PK	120	24	C-9	3.87	2.37	2000					$3.01		Transp. Purple-Party Light
		25	16335	25A/TY-CD 6PK	120	24	C-9	3.87	2.37	2000					$3.01		Transp. Yellow-Party Light
		25	22731	25A/TP 6 PK	120	120	C-9	3.87	2.37	2000					$3.01		Transp. Purple-Party Light
		25	49728	25A/TY 6PK	120	120	C-9	3.87	2.37	2000					$3.01		Transp. Yellow-Party Light
		25	49724	25A/TB 6PK	120	120	C-9	3.87	2.37	2000					$3.01		Transp. Blue-Party Light
		25	22732	25A/TE 6PK	120	120	C-9	3.87	2.37	2000					$3.01		Transp. Teal-Party Light
		25	49725	25A/TG 6PK	120	120	C-9	3.87	2.37	2000					$3.01		Transp. Green-Party Light
		25	22730	25A/TPK 6PK	120	120	C-9	3.87	2.37	2000					$3.01		Transp. Pink-Party Light
		25	49727	25A/TR 6PK	120	120	C-9	3.87	2.37	2000					$3.01		Transp. Red-Party Light
		25	46645	25A/SG/CD-PQ1/5	120	25	CC-6	4.25	2.50	1500					$3.01		Stained Glass
PAR36	Scrw Term	25	14553	25PAR36	6	12	C-6	2.75		1000		130	3000	19700			Pin Spot. Filament Shield
		25	14554	25PAR36/NSP	12	12	C-6	2.75		2000		150		2600			Narrow Spot. Filament Shield
		25	14555	25PAR36/WFL	12	12	C-6	2.75		2000		150		360			Wide Flood. Filament Shield
		25	14556	25PAR36/VWFL	12	12	C-6	2.75		2000		150		160			Very Wide Flood. Filament Shield

* Based on 3 hours per day use.
** Based on 3 hours per day use, $0.11 per Kwh

For the most up-to-date product information, see www.gelighting.com. To convert inches to millimeters, multiply by 25.4.
All warning and caution notices found at the end of this section (page 1-20).

Bulb Shape	Base	Watts	Order Code	Description	Volts	Case Qty	Filament Design	MOL (in)	LCL (in)	Rated Life (hrs)	Rated Life (yrs*)	Lumens Initial	Color Temp K	CBCP	Annual Operating Costs**	Warning and Caution Notices	Additional Information
Incandescent Lamps (continued)																	
25 Watts (continued)																	
PAR46	Scrw Term	25	14562	25PAR46	6	12	C-6	3.75		1000		140		55000			Pin Spot. Filament Shield
R14	Inter	25	18230	25R14N	130	120	CC-2V	2.56		1500		180			$3.01	5e	Reflector-Light, Inside Frost
		25	39156	25R14N	120	120	CC-2V	2.56		1500		180			$3.01	5e	Reflector-Light, Inside Frost
R14	SC Bay B15	25	33405	25R14SC/SP	12	120	CC-8	2.62		2000		200			$3.01	5e	Reflector Spot, Light Inside Frost
S11	SC Bay BA15s	25	14575	25S11/4SC	10	120	CC-6	2.37	1.25	1000		360			$3.01		Clear-Railway, Signal Light
T6.5	DC Bay	25	14676	25T61/2DC	120	60	C-8	5.56		1000		220			$3.01		Clear-Appliance, Scale Illuminator
		25	14678	25T61/2/DC	130	60	C-8	5.56		1000		244			$3.01		Clear-Appliance, Scale Illuminator
		25	14685	25T61/2DC/F	130	60	C-8	5.56		1000		240			$3.01		Frost-Appliance, Scale Illuminator
T6.5	Inter	25	14639	25T61/2	120	60	C-8	5.50		1000		220			$3.01		Clear-Showcase
		25	14641	25T61/2	130	60	C-8	5.50		1000		244			$3.01		Clear-Showcase
		25	44727	25T61/2 CD1-6PK	120	20	C-8	5.50		1000		220			$3.01		Clear-Showcase
		25	14668	25T61/2/F	130	60	C-8	5.50		1000		240			$3.01		Frost-Showcase
T7	DC Bay	25	14741	25T7DC	120	60	C-7A	2.25	1.31	1000		195			$3.01		Clear-Appliance
T7	Inter	25	10692	25T7N-CD 6PK	120	240	C-7A	2.25	1.56	1000		195			$3.01		Clear-Appliance
		25	14791	25T7N	120	60	C-7A	2.25	1.56	1000		195			$3.01		Clear-Appliance
T10	Med	25	45144	25T10 CD1-5PK	130	25	C-8	5.60		1000		250			$3.01	5e, 9d	Clear-Display Light
		25	14880	25T10 24PK	120	192	C-8	5.60		1000		250			$3.01	5e, 9d	Clear-Display Light
		25	45513	25T10/F CD1-5PK	130	25	C-8	5.60		1000		250			$3.01	5e, 9d	Frost-Display Light
27 Watts																	
R20	Med	27	47681	27R20/FL/LL 6PK	120	30	CC-6	3.93		2500	2.3	140	2500		$3.25	5b, 9k	Long Life Reflector-Indoor Spotlight, Reduced Wattage
30 Watts																	
R20	Med	30	14891	30R20/1-6PK	120	30	CC-6	3.93		2000	1.8	180	2500		$3.61	5b, 9k	Indoor Reflector
		30	46848	30R20/1	130	30	C-9	3.93		2000		180			$3.61	5b, 9k	Indoor Reflector-Light I.F
		30	46849	30R20/6	130	30	C-9	3.93		6000		145			$3.61	9d	Reflector-Light I.F.-Flashing Message Sign
S11	DC Bay	30	17948	30S11/DC/RS	75	30	C-9	2.37	1.54	2000		275			$3.61		Clear-Train
30/70/100 Watts																	
A21	Med	30/70/100	97493	30/100-1PK	120	12	C-2R/CC-8	5.25	3.88	1200	1.1	305/995/1300	2800		$3.61/$8.43/$12.05	2b, 5c, 9c, 9j	Soft-White, 3-Way
		30/70/100	97784	30/100RVL- PQ1/12	120	12	C-2R	5.25	3.88	1200	1.1	220/740/960	2850		$3.61/$8.43/$12.05	2b, 9c, 9j	Reveal® Soft-White, 3-Way
40 Watts																	
A15	Med	40	15199	40A15	120	120	C-9	3.50	2.37	1500	1.4	415	2600		$4.82		Clear-Appliance and Oven Service, Vibration Resistant
		40	15206	40A15 CARD 12PK	120	60	C-9	3.50	2.37	1500	1.4	415	2600		$4.82		Clear-Appliance and Oven Service, Vibration Resistant
		40	21188	40A15 CD/2	120	60	C-9	3.50	2.37	1500	1.4	415	2600		$4.82		Clear-Appliance and Oven Service, Vibration Resistant
		40	27495	40A15/F/CD	120	60	C-9	3.50	2.37	1500	1.4	355	2600		$4.82		Frosted-Appliance and Oven Service, Vibration Resistant
		40	27451	40A15/F 120PK	120	120	C-9	3.50	2.37	1500	1.4	355	2600		$4.82		Frost
		40	44409	40A15/CF CD2 6PK	120	30	C-9	3.50	2.37	1500	1.4	415	2600		$4.82		Clear-Ceiling Fan, Vibration Resistant
		40	44410	40A15W/CFCD2 6PK	120	30	C-9	3.50	2.37	1500	1.4	355	2600		$4.82		White-Ceiling Fan, Vibration Resistant
		40	48696	40A15/CF/RVL CD2	120	30	C-9	3.50	2.37	1500	1.4	320	2600		$4.82		Reveal® Clear, Ceiling Fan, Vibration Resistant

* Based on 3 hours per day use.
** Based on 3 hours per day use, $0.11 per Kwh

For the most up-to-date product information, see www.gelighting.com. To convert inches to millimeters, multiply by 25.4.
All warning and caution notices found at the end of this section (page 1-20).

Bulb Shape	Base	Watts	Order Code	Description	Volts	Case Qty	Filament Design	MOL (in)	LCL (in)	Rated Life (hrs)	Rated Life (yrs*)	Lumens Initial	Color Temp K	CBCP	Annual Operating Costs**	Warning and Caution Notices	Additional Information
Incandescent Lamps (continued)																	
40 Watts (continued)																	
A15	Med	40	48697	40A15WCF/RVL CD2	120	30	C-9	3.50	2.37	1500	1.4	260			$4.82		Reveal® Soft-White, Ceiling Fan, Vibration Resistant
		40	31084	40A15/RVL-PQ1/6	120	30	C-9	3.50	2.37	1500	1.4	320			$4.82		Reveal® Clear
		40	48706	40A15/RVL CD2	120	30	C-9	3.50	2.37	1500	1.4	320			$4.82		Reveal® Clear, Appliance
		40	46887	40A15/CF/STGPQ2/6	120	30	C-9	3.50	2.37	1500	1.4	405	2600		$4.82	2a, 2b, 5e, 9l	Clear, Saf-T-Gard®, Ceiling Fan
A15	Cand	40	71393	40A15/CA/C/CF-CD2	120	6	C-7A	3.50	2.37	1500	1.4	305	2500		$4.82		Clear-Ceiling Fan, Vibration Resistant
		40	71394	40A15/CA/W/CF-CD2	120	6	C-7A	3.50	2.37	1500	1.4	230	2500		$4.82		White-Ceiling Fan, Vibration Resistant
R14	Inter	40	25777	40R14/N/CD	120	30	CC-2V	2.68		1500	1.4	280			$4.82	2a, 5e	Indoor Reflector
R14	Med	40	25776	40R14/CD	120	30	CC-2V	2.18		1500	1.4	280			$4.82	2a, 5e	Indoor Reflector
R16	Med	40	25781	40R16/CD		30	CC-6			1500	1.4	225	2500		$4.82	2a, 5e	Indoor Reflector
S11	Inter	40	15734	40S11N/1/F	120	120	C-9	2.31	1.62	500		440			$4.82	5b	Frost
		40	35156	40S11N/1 CARD	120	240	C-9	2.31	1.62	500		440			$4.82	5b	Clear-12-Card Pack
T6.5	Inter	40	15740	40T6 1/2/2	120	60	C-8	5.50		750		420			$4.82		Clear-Refrigerator
		40	44422	40T61/2/2CD1-6PK	120	30	C-8	5.50		750		380			$4.82		Clear-Appliance
		40	15742	40T61/2/2F	120	60	C-8	5.50		750		380			$4.82		Frost-Appliance
T10	Med	40	15852	40T10	120	120	C-8	5.60		1000	0.9	420	2500		$4.82	5e, 9d	Clear-Display Light
		40	15892	40T10/F	120	120	C-8	5.60		1000	0.9	415	2500		$4.82	5e, 9d	Frost-Display Light
		40	45145	40T10/F CD1-5PK	120	25	C-8	5.60		1000	0.9	415	2500		$4.82	5e, 9d	Frost-Display Light
		40	45514	40T10/CL CD1-5PK	120	25	C-8	5.60		1000	0.9	420	2500		$4.82	5e, 9d	Clear-Display Light
		40	48707	40T10/RVL CD1	120	25	C-8	5.60		1000	0.9	290	2550		$4.82	5e, 9d	Reveal® – Clear-Display Light
		40	48709	40T10/F/RVL CD1	120	25	C-8	5.60		1000	0.9	290	2550		$4.82	5e, 9d	Reveal® – Frost-Display Light
45 Watts																	
BR30	Med	45	20330	45R/FL/MI-1 6PK	120	30	CC-6	5.37		2000	1.8	425	2600		$5.42	2a, 5e, 9k	Indoor Reflector
		45	26804	45R30/FL/LL 6PK	120	30	CC-6	5.37		2500	2.3	400	2600		$5.42	2a, 2b, 5e, 9k	Long Life Indoor Reflector
R20	Med	45	14878	45R20MI/1-6PK	120	30	CC-6	3.31		2000	1.8	310	2600		$5.42	2a, 5e, 9k	Indoor Reflector
		45	18279	45R20/TWIN	120	30	CC-6	3.31		2000	1.8	310	2600		$5.42	2a, 5e, 9k	Indoor Reflector
		45	47682	45R20/FL/LL 6PK	120	30	CC-6	3.31		2500	2.3	310	2500		$5.42	2a, 5e, 9k	Long Life Indoor Reflector
		45	73026	45R20/YR	120	6	CC-6	3.31		1500	1.4	350	2500		$5.42	2a, 5e, 9k	Indoor Reflector
		45	73025	45R20/YR-PK2/3	120	3	CC-6	3.31		1500	1.4	350	2500		$5.42	2a, 5e, 9k	Indoor Reflector
		45/40	73029	45R20/130V	130/120	30	CC-6	3.31		2000/4000	1.8/3.6	300/225	2500		$5.42	2a, 5e, 9k	Indoor Reflector
		45	73439	45R20/RVL PK1/6	120	30	CC-6	3.31		2000	1.8	230	2550		$5.42	2a, 5e, 9k	Indoor Reflector
50 Watts																	
A19	Med	50	16201	50A19/RS/SH	75	120	C-9	3.87	2.50	1000		500				2a, 5a	Train, Rough Service Short
PAR36	Scrw Term	50	11468	50PAR36/WFL/4	12	12	C-6	2.75		4000		300		720			Wide Flood. Filament Shield
		50	12892	50PAR36/VNSP	12	12	C-6	2.75		2000		330		19000			Very Narrow Spot. Filament Shield
		50	16540	50PAR36/NSP	12	12	C-6	2.75		2000		330		11000			Narrow Spot. Filament Shield
		50	16541	50PAR36/WFL	12	12	C-6	2.75		2000		330		900			Wide Flood. Filament Shield
		50	16542	50PAR36/VWFL	12	12	C-6	2.75		2000		330		600			Very Wide Flood. Filament Shield
R20	Med	50	14888	50R20/PL/1-6PK	120	30	CC-6	3.93		2000					$6.02	2a, 5e, 9k	Reflector Plant Light
		50	22752	50R20/BLB 6PK	120	6	CC-6	3.93		1000					$6.02	2a, 2f, 5b, 7a, 7c, 9k	Blacklight Reflector
ER30	Med	50	44429	50ER30	120	24	CC-6	6.06		2000					$6.02		Elliptical Reflector

* Based on 3 hours per day use.
** Based on 3 hours per day use, $0.11 per Kwh

For the most up-to-date product information, see www.gelighting.com. To convert inches to millimeters, multiply by 25.4.
All warning and caution notices found at the end of this section (page 1-20).

Bulb Shape	Base	Watts	Order Code	Description	Volts	Case Qty	Filament Design	MOL (in)	LCL (in)	Rated Life (hrs)	Rated Life (yrs*)	Lumens Initial	Color Temp K	CBCP	Annual Operating Costs**	Warning and Caution Notices	Additional Information
Incandescent Lamps (continued)																	
50/100/150 Watts																	
A21	Med	50/ 100/ 150	97494	50/150-1PK	120	12	CC-8	5.25	3.87	1200	1.1	615/ 1540/ 2155	2800		$6.02/ $12.05/ $18.07	2b, 9j	Soft-White, 3-Way
		50/ 100/ 150	97763	50/150-2PK	120	6	CC-8	5.25	3.87	1200	1.1	615/ 1540/ 2155	2800		$6.02/ $12.05/ $18.07	2b, 9j	Soft-White, 3-Way
		50/ 100/ 150	97785	50/150RVL-1/12PQ	120	12	CC-8	5.25	3.87	1200	1.1	450/ 1150/ 1600	2850		$6.02/ $12.05/ $18.07	2b, 9j	Reveal®, Soft-White 3-Way
		50/ 100/ 150	97469	50/150/RVL-2PK	120	6	CC-8	5.25	3.87	1200	1.1	450/ 1150/ 1600	2850		$6.02/ $12.05/ $18.07	2b, 9j	Reveal®, Soft-White 3-Way
		50/ 100/ 150	97781	50/150/LL-1/12PK	120	12	CC-8	5.25	3.87	1920	1.8	560/ 1400/ 1960	2800		$6.02/ $12.05/ $18.07	2b, 9j	Long Life, Soft-White 3-Way
50/200/250 Watts																	
A21	Med	50/ 200/ 250	97482	50/250/1-1PK	120	12	CC-8/ CC-25	5.25	3.87	1200	1.1	590/ 3335/ 3925	2800		$6.02/ $24.09/ $30.11	2b, 9c, 9j	Soft-White, 3-Way
60 Watts																	
A19	Med	60/53	72528	60A/S/130-TP2/12	130/120	24	C-7A			3000	2.7	625/475					Rough-Service
		60/53	72529	60A/RS130-PK2/12	130/120	24	C-7A	4.13	2.91	2000/5400		625/475			$7.23/$6.38	2a, 5e	Rough Service
		60/53	72549	60A/RS/STG-T2/12	130/120	24	C-7A	4.13	2.91	2000/5400		500/380			$7.23/$6.38	2a, 2b, 5e, 9l	Rough Service Saf-T-Gard®
		60	97483	60A/SPK-2PK	120	24	CC-6	4.43	3.12	1000		675			$7.23	2b	Soft Pink
		60	97495	60A/Y-2PK	120	24	CC-6	4.43	3.12	1000		550			$7.23	2b	Yellow-Bug Light
		60	25905	60A/BLB 6PK	120	30	C-9	4.43		1000					$7.23	2a, 2f, 5b, 7a, 7c, 9k	Blacklight
		60	41624	60A/PL 6PK	120	30	CC-6	4.43	3.12	1000		630			$7.23	5e	Plant
A15	Med	60	44407	60A15/CF CD2 6PK	120	30	C-9	3.50	2.37	1500	1.4	650	2700		$7.23		Clear-Ceiling Fan, Vibration Resistant
		60	14029	60A15/W/CF-CD2	120	60	C-9	3.50	2.37	1500	1.4	650	2700		$7.23		White-Ceiling Fan, Vibration Resistant
		60	46888	60A15CF/STGPQ2/6	120	30	C-9	3.50	2.37	1500	1.4	635	2700		$7.23	2a, 2b, 5e, 9l	Ceiling Fan Saf-T-Gard®
A15	Cand	60	71395	60A15/CA/C/CF-CD2	120	6	C-7A	3.50	2.37	1500	1.4	635	2500		$7.23		Clear-Ceiling Fan, Vibration Resistant
		60	71396	60A15/CA/W/CF-CD2	120	6	C-7A	3.50	2.37	1500	1.4	440	2500		$7.23		White-Ceiling Fan, Vibration Resistant
		60	48698	60A15/CF/RVL CD2	120	30	C-9	3.50	2.37	1500	1.4	500			$7.23		Reveal® – Clear, Ceiling Fan, Vibration Resistant
R46	Scrw Term	60	17212	60PAR/2/R	38	12	CC-2V	3.75		800							Red Lens - Train Warning
65 Watts																	
BR30	Med	65	18011	65R/FL/MI-TWIN	120	6	CC-6	5.37		2000	1.8	700	2600		$7.83	2a, 5e, 9k	Indoor Reflector, Twin Pink
		65	20331	65R30/FL/MI- 6PK	120	30	CC-6	5.37		2000	1.8	700	2600		$7.83	2a, 2b, 5e, 9k	Indoor Reflector, Flood
		65	20332	65R30/SP/MI-6PK	120	30	CC-6	5.37		2000	1.8	700	2600		$7.83	2a, 2b, 5e, 9k	Indoor Reflector, Spot
		65	22714	65R30FL/COMM12PK	120	12	CC-6	5.37		2000	1.8	700	2600		$7.83	2a, 2b, 5e, 9k	Indoor Reflector, 12 Pack
		65	26805	65R30/FL/LL 6PK	120	30	CC-6	5.37		2500	2.3	670	2600		$7.83	2a, 2b, 5e, 9k	Long Life, Indoor Reflector, Flood
		65	48917	65R30/FL/LLPQ2/3	120	15	CC-6	5.37		2500	2.3	670	2600		$7.83	2a, 2b, 5e, 9k	Long Life, Indoor Reflector, Flood
		65	26806	65R30/SP/LL 6PK	120	30	CC-6	5.37		2500	2.3	670	2600		$7.83	2a, 2b, 5e, 9k	Long Life, Indoor Reflector, Spot
		65	11684	65R30FLRVL-PK2/3	120	15	CC-6	5.37		2000	1.8	510	2650		$7.83	2a, 2b, 5e, 9k	Reveal® Floodlight
		65	48692	65R/FL/RVL PQ1/6	120	30	CC-6			2000	1.8	510	2650		$7.83	2a, 2b, 5e, 9k	Reveal® Floodlight

* Based on 3 hours per day use.
** Based on 3 hours per day use, $0.11 per Kwh

For the most up-to-date product information, see www.gelighting.com. To convert inches to millimeters, multiply by 25.4.
All warning and caution notices found at the end of this section (page 1-20).

Incandescent Lamps

Bulb Shape	Base	Watts	Order Code	Description	Volts	Case Qty	Filament Design	MOL (in)	LCL (in)	Rated Life (hrs)	Rated Life (yrs*)	Lumens Initial	Color Temp K	CBCP	Annual Operating Costs**	Warning and Caution Notices	Additional Information
Incandescent Lamps (continued)																	
65 Watts (continued)																	
BR30	Med	65	73179	65R30/RVL/TW-3PK	120	3	CC-6	5.37		2000	1.8	530	2600		$7.83	2a, 2b, 5e, 9k	Reveal® Floodlight
		65	47723	65R30FL/STGPQ1/6	120	30	CC-6	5.37		2000	1.8	650	2700		$7.83	2a, 2b, 5e, 9a, 9k, 9l, 9m	Indoor Reflector, Flood, Saf-T-Gard®
		65	20996	65R30/PL-1 6PK	120	30	CC-6	5.37		2000					$7.83	2a, 2b, 5e, 9k	Reflector, Plant Light
		65	46855	65R30/FL	130	30	CC-6	5.37		2000 /5200	1.8	670/510	2600		$7.83	2a, 2b, 5e, 9k	Watt-Miser® Reflector
		65	46856	65R30/SP	130	30	CC-6	5.37		2000/5200	1.8	670/510	2600		$7.83	2a, 2b, 5e, 9k	Watt-Miser® Reflector
BR40	Med	65	14016	65R40/FL/MI-6PK	120	30	CC-6	6.56		2000	1.8	580	2600		$7.83	2a, 2b, 5e, 9k	Indoor Reflector, Flood
		65	47683	65R40/FL/LL	120	30	CC-6	6.56		2500	2.3	480	2600		$7.83	2a, 2b, 5e, 9k	Long Life, Indoor Reflector, Flood
		65	46861	65R40/FL	130	30	CC-6	6.56		2000	1.8	475	2600		$7.83	2a, 2b, 5e, 9k	Watt-Miser® Reflector-I.F.
BR40	Med	65	87904	65R40FL/RVL-TP6	120	30	CC-6	6.56		2000	1.8	470	2650		$7.83	2a, 2b, 5e, 9k	Reveal® Reflector Flood
PAR38	Med Sid Pr	65	80314	75PAR/3FL/65WM	120	12	CC-6	4.30		2000	1.8	675	2675	1750	$7.83	1a, 2a, 2b	Compact Flood, Reduced Wattage
70 Watts																	
A21	Med	70/170/ 240	15846	70/240A/RL/SW6PK	120	30	CC-8/CC-8	5.25	3.62	1000	0.9	800/2800/ 3600	2850		$8.43/ $20.48/ $28.91		3-Way Reader Light
75 Watts																	
A19	Med	75/67	72530	75A/RS130-PK6	130/120	6	C-7A	4.13	2.91	2000/5400		740/560			$9.03/$8.07	2a, 5e	Rough Service
A21	Med	75	18274	75A/RS 12PK-5	120	60	C-7A	4.13	2.91	1000	0.9	750			$9.03	2a	Rough-Service
		75	46895	75A/RS/STG PQ1/6	120	30	C-7A	4.13	3.66	1000	0.9	715			$9.03	2a, 2b, 5e, 9l	Rough Service, Saf-T-Gard®
		75/66	17527	75A/RS 60PK	130/120	60	C-7A	4.13	2.91	1000/2850	0.9/2.6	740/560			$9.03/$7.95	2a, 2b, 5e, 9l	Rough-Service
		75/67	72550	75A/RS/STG-TP6	130/120	6	C-7A	4.13	2.91	2000/5400		740/560			$9.03/$8.07	2a	Rough Service, Saf-T-Gard®
R30	Med	75	22748	75R30/BLB 6PK	120	6	C-9	5.37		1000					$9.03	2a, 2f, 5b, 7a, 7c, 9k	Reflector Blacklight
PAR38	Med Sid Pr	75	80319	75PAR/3SP/MINE	120	12	CC-6	4.30		2000		765	2725			1a, 2a, 2b, 9n	Mine Reflector
		75	80316	75PAR/3FL/MINE	120	12	CC-6	4.30		2000		765	2725	1750		1a, 2a, 2b, 9n	Mine, Flood
PAR46	3 Prong	75	36473	75PAR46/TS	120	12	CC-6	3.87		6000		700					Traffic Signal
85 Watts																	
PAR38	Med Skirt	85	20945	85PAR/FL/BG 6PK	120	6	CC-6	5.31		2000						1a, 2a, 2b	Yellow-Bug Light, BB
		85	13465	100PAR/B/85WM6PK	120	6	CC-6	5.31		2000						1a, 2a, 2b	Powder Coated-Blue, BB
		85	13472	100PAR/R/85WM6PK	120	6	CC-6	5.31		2000						1a, 2a, 2b	Powder Coated-Red, BB
		85	13473	100PAR/Y/85WM6PK	120	6	CC-6	5.31		2000						1a, 2a, 2b	Powder Coated-Yellow, BB
		85	13474	100PAR/G/85WM6PK	120	6	CC-6	5.31		2000						1a, 2a, 2b	Powder Coated-Green, BB
90 Watts																	
A19	Med	90	61435	90A/Y-2PK	120	24	CC-8	4.43	3.12	1000					$10.84	2b	Yellow-Bug Light
100 Watts																	
A19	Med	100	97484	100A/SPK-2PK	120	24	CC-8	4.43	3.12	1000		1330			$12.05	2b	Soft Pink
		100/89	72527	100A/RS130-PK12	130/120	12	C-7A	4.13	2.91	2000/5400		1070/815			$12.05/ $10.72	2a, 5e	Rough Service
		100/89	72546	100A/RS/STG-TP6	130/120	6	C-7A	4.13	2.91	2000/5400		1070/815			$12.05/ $10.72	2a, 2b, 5e, 9l	Rough Service, Saf-T-Guard®
A21	Med	100/89	17522	100A/RS 60PK	130/120	60	C-7A	4.13	2.91	2000/5400		1070/815			$12.05/ $10.72	2a, 5e	Rough-Service
		100	18275	100A/RS 12PK-5	120	60	C-7A	4.13	2.91	1000	0.9	1230			$12.05	2a	Rough-Service
		100	47261	100A/RS/STGPQ1/6	120	30	C-7A	4.13	3.66	1000	0.9	1160			$12.05	2a, 2b, 5e, 9l	Rough Service, Saf-T-Guard®

* Based on 3 hours per day use.
** Based on 3 hours per day use, $0.11 per Kwh

For the most up-to-date product information, see www.gelighting.com. To convert inches to millimeters, multiply by 25.4.
All warning and caution notices found at the end of this section (page 1-20).

Incandescent Lamps (continued)

Bulb Shape	Base	Watts	Order Code	Description	Volts	Case Qty	Filament Design	MOL (in)	LCL (in)	Rated Life (hrs)	Rated Life (yrs*)	Lumens Initial	Color Temp K	CBCP	Annual Operating Costs**	Warning and Caution Notices	Additional Information
100/200/300 Watts																	
PS25	Mog	100/ 200/ 300	41459	100/300 6PK	120	30	CC-6	6.68	4.43	1200	1.1	1250/ 2650/ 3900	2800		$12.05/ $24.10/ $36.15	2b, 9c, 9j	Soft-White, 3-Way
110 Watts																	
R30	Med	110	46859	110R30/FL/RS/1	120	30	C-11	5.38		2000		900			$13.25	2a, 2b, 5e, 9k	Reflector Flood. I.F. Rough Service
120 Watts																	
BR40	Med	120	21000	120R40/PL-1 6PK	120		CC-6	6.56		2000					$14.45	2a, 2b, 5e, 9k	Reflector Plant Light, BB
		120	47725	120R40FL/STG PQ6	130	30	CC-11	6.56		2000/5200	1.8	1025/780	2700/2600	1200	$14.45	2a, 2b, 5e, 9a, 9k, 9l, 9m	Reflector, Saf-T-Guard®
PAR38	Med Sid Pr	120	80313	150PAR/3FL/120WM	120	12	CC-6	4.30		2000		1370		3600		1a, 2a, 2b, 9n	Watt-Miser®, Flood, Reduced Wattage
		120	80322	150PAR/3SP/120WM	120	12	CC-6	4.30		2000		1370		9200		1a, 2a, 2b, 9n	Watt-Miser®, Spot, Reduced Wattage
125 Watts																	
R40	Med	125	48069	125R40/1 6PK	120	30	C-9			5000	4.6					2a, 2b, 3b, 5e, 6a	Reflector-Warm Up Infrared Heat Lamp
150 Watts																	
A21	Med	150	16068	150A/CL 12PK	120	12	CC-8	5.37	4.06	750	0.7	2710	2900		$18.07		Clear
		150	10429	150A/W 12PK	120	12	CC-8	5.37	4.06	750	0.7	2680	2900		$18.07		Soft-White
		150	16703	150A/RVL	120	30	CC-8	5.37	4.06	750	0.7	2100	2950		$18.07		Reveal®
		150/ 133	72532	150A21/RS-PK6	130/ 120	30	C-17	5.37	4.06	1000/ 2600		2065/ 1580			$18.07/ $16.02	2a, 5e	Rough Service
PS25	Med	150/ 133	72547	150PS25/RS/STG	130/ 120	60	C-17	6.93	5.18	1000/ 2600		2160/ 1650			$18.07/ $16.02	2a, 2b, 5e, 9l	Rough Service Saf-T-Guard®
PAR38	Med Sid Pr	150	80321	150PAR/3SP/MINE	120	12	CC-6	4.30		2000		1740		12000		1a, 2a, 2b, 9n	Mine, Spot
		150	80315	150PAR/3FL/MINE	120	12	CC-6	4.30		2000		1740	2775	3100		1a, 2a, 2b, 9n	Mine, Flood
		150	80317	150PAR/3FL/MINE	130	12	CC-6	4.30		2000		1740		3100		1a, 2a, 2b, 9n	Mine, Flood
PAR38	Med Skirt	150	19465	150PAR/FL/B	120	12	CC-6	5.31		2000						1a, 2a, 2b	Flood. Dichro Blue
		150	19467	150PAR/FL/G	120	12	CC-6	5.31		2000						1a, 2a, 2b	Flood. Dichro Green
		150	19468	150PAR/FL/R	120	12	CC-6	5.31		2000						1a, 2a, 2b	Flood. Dichro Red
		150	26370	150PAR/FL/CVG	120	12	CC-6	5.31		2000		1700				1a, 2a, 2b, 9L, 9m	CovRguard® Flood, BB, Coated
		150	26371	150PAR/SP/CVG	120	12	CC-6	5.31		2000		1700				1a, 2a, 2b, 9L, 9m	CovRguard® Spot BB, Coated
		150	48037	150PAR/FL/STGPQ6	120	6	CC-6	5.31		2000		1700				2a, 2b, 5e, 9a, 9k, 9l, 9m	Saf-T-Gard® Flood, BB, Coated
PAR46	3 Prong	150	35327	150PAR46/TS	115	12	CC-6	4		6000		1750					Traffic Signal-Burn Horizontal
	Scrw Term	150	19512	150PAR46/1	32	12	CC-8	3.75		800		1950		10000			Mine Locomotive Headlight
		150	19517	150PAR46	125	12	C-13	3.75		1000		1250					Mine Locomotive Headlight
	Med Sid Pr	150	41968	150PAR46/3MFL	125	12	CC-13	4		2000		1500	2750	8000		1a, 2a, 5b, 5c, 9n	Medium Flood
175 Watts																	
PAR38	Med Skirt	175	13643	175PAR38/HEAT	120	12	CC-6	5.31	4.31	5000		3100				1a, 2a, 2b, 3b	Infrared-Clear

* Based on 3 hours per day use.
** Based on 3 hours per day use, $0.11 per Kwh

For the most up-to-date product information, see www.gelighting.com. To convert inches to millimeters, multiply by 25.4.
All warning and caution notices found at the end of this section (page 1-20).

Bulb Shape	Base	Watts	Order Code	Description	Volts	Case Qty	Filament Design	MOL (in)	LCL (in)	Rated Life (hrs)	Rated Life (yrs*)	Lumens Initial	Color Temp K	CBCP	Annual Operating Costs**	Warning and Caution Notices	Additional Information
Incandescent Lamps (continued)																	
200 Watts																	
A21	Med	200	16069	200A/CL-1 12PK	120	12	CC-8	5.37	4.06	750	0.7	3780	2900		$24.09		Crystal
		200	11585	200A/W-1 12PK	120	12	CC-8	5.37	4.06	750	0.7	3405	2900		$24.09		Soft-White
		200	44534	200A/W-PK6	120.1		CC-8	5.37	4.06	750	0.7	3405	2900		$24.09		Soft-White
		200	89371	200A/RVL-TP1/6	120	30	CC-8	5.37	4.06	750	0.7	2395	2950		$24.09		Reveal® Soft-White
		200/ 177	25936	200A21/99/IF	130/ 120	60	CC-8	5.37	4.06	2500/ 6800		2780/ 2140			$24.09/ $21.32		I.F.-Extended Service (Ratings @ 120 volts)
PAR46	Med Sid Pr	200	20115	200PAR46/3NSP	120	12	CC-13	4		2000		2270	2750	31000		1a, 2a, 5b, 5c, 9n	Narrow Reflector
		200	20138	200PAR46/3MFL	120	12	CC-13	4		2000		2270	2750	11500		1a, 2a, 5b, 5c, 9n	Medium Flood
		200	20117	200PAR46/3NSP	130	12	CC-13	4		2000		2270	2750	31000		1a, 2a, 5b, 5c, 9n	Narrow Reflector
		200	20140	200PAR46/3MFL	130	12	CC-13	4		2000		2270	2750	11500		1a, 2a, 5b, 5c, 9n	Medium Flood
PAR56	Scrw Term	200	20122	200PAR	30	12	CC-8	4.50		350				230000			Locomotive Headlight
	Mog End Pr	200	49889	200PAR56/MFL	120	12	CC-13	5		2000		2270	2750	15000		1a, 2a, 5b, 5c, 9n	Medium Flood
PS30	Med	200/177	72548	200PS30RS/23/STG	130/120	60	C-9	8.06	6.00	1000/2600		3000/2280				2a, 2b, 5e, 9l	Saf-T-Guard®
240 Watts																	
PAR56	Scrw Term	240	20575	240PAR56/VNSP	12	12	C-6	4.50		2000			2800	140000		1a, 2a, 5b, 5c, 9n	Very Narrow Reflector
		240	20576	240PAR56/MFL	12	12	C-6	4.50		2000			2800	46000		1a, 2a, 5b, 5c, 9n	Medium Flood
		240	20577	240PAR56/WFL	12	12	C-6	4.50		2000			2800	13000		1a, 2a, 5b, 5c, 9n	Wide Flood
250 Watts																	
R40	Med	250	37770	250R40/1 6PK	120	30	C-9	6.56		5000		2200				2a, 2b, 3b, 5e, 6a	Reflector-Warm Up Infrared Heat Lamp-Clear Face
		250	37771	250R40/10 6PK	120	30	C-9	6.56		5000						2a, 2b, 3b, 5e, 6a	Reflector-Chill Chaser Infrared Heat Lamp. Red, HRG
R40	Med Skirt	250	20724	250R40/4	120	24	C-9	7.43		5000						2a, 2b, 3b, 5e, 6a	Reflector Infrared Industrial-Light I.F., BB
R40	Med	250	47724	250R40/1/STG PQ6	120	30	C-9	6.56		5000						2a, 2b, 5e, 9a, 9k, 9l, 9m	Heat Lamp Saf-T-Gard® – Shatter-Resistant
		250	23423	21A/R40/FL	12	24	C-2V	6.68		1000		2850		1600		2b, 5a, 5e	Reflector Flood
300 Watts																	
PS25	Med	300/266	73788	300M/130V-PK6	130/120	6	CC-8	6.93	4.92	750/1950		6120/4650					Clear
		300/266	73790	300M/IF/130V-PK3	130/120	3	CC-8	6.93	4.92	750/1950		6120/4650					Inside Frost
PS35	Mog Screw	300	21025	300	130	24	C-9	9.37	7.00	1000		5820					Clear
		300	21079	300/IF	130	24	C-9	9.37	7.00	1000		5820					Inside Frost
R40	Med	300	21197	300R/SP	120	24	CC-2V	6.56		2000		3700		9000		2a, 2b, 5b, 9e	Reflector-Light I.F. HORIZ
		300	21213	300R/FL	120	24	CC-2V	6.56		2000		3700		2500		2a, 2b, 5b, 9e	Reflector-Flood I.F. HORIZ
		300	21229	300R/FL/1	120	24	CC-2V	6.75		2000		3000		4400		2a, 2b, 5b, 9e	Reflector-Flood-I.F. BB, HRG
		300/266	21215	300R/FL	130/120	24	CC-2V	6.56		2000/5400		3465/2670		2500		2a, 2b, 5b, 9e	Reflector Flood-I.F. HORIZ (Ratings @ 120 volts)

* Based on 3 hours per day use.
** Based on 3 hours per day use, $0.11 per Kwh

For the most up-to-date product information, see www.gelighting.com. To convert inches to millimeters, multiply by 25.4.
All warning and caution notices found at the end of this section (page 1-20).

Bulb Shape	Base	Watts	Order Code	Description	Volts	Case Qty	Filament Design	MOL (in)	LCL (in)	Rated Life (hrs)	Rated Life (yrs*)	Lumens Initial	Color Temp K	CBCP	Annual Operating Costs**	Warning and Caution Notices	Additional Information
Incandescent Lamps (continued)																	
300 Watts (continued)																	
R40	Mog Screw	300	21254	300R/3FL	120	24	CC-2V	7.25		2000		3000		4500		2a, 2b, 5b, 9e	Reflector Flood-I.F.1BB
PAR56	Scrw Term	300	23427	300PAR56/WFL	12	12	C-6	4.50		1000		6000				2b, 9f, 9n	PAR-Wide Flood. Swimming
	Mog End Pr	300	20803	300PAR56/NSP	120	12	CC-13	5		2000		3840	2750	68000		1a, 2a, 5b, 5c, 9n	Narrow Reflector
		300	20836	300PAR56/MFL	120	12	CC-13	5		2000		3840	2750	24000		1a, 2a, 5b, 5c, 9n	Medium Flood
		300	20849	300PAR56/WFL	120	12	CC-13	5		2000		3840	2750	11000		1a, 2a, 5b, 5c, 9n	Wide Flood
		300	20838	300PAR56/MFL	130	12	CC-13	5		2000		3840	2750	24000		1a, 2a, 5b, 5c, 9n	Medium Flood
		300	20851	300PAR56/WFL	130	12	CC-13	5		2000		3840	2750	11000		1a, 2a, 5b, 5c, 9n	Wide Flood
350 Watts																	
PAR56	Scrw Term	350	19866	350PAR56/SP	75	12	CC-8	4.50		500		6200				1a, 2a, 5b, 5c, 9n	Ditch Light-Locomotive
375 Watts																	
R40	Med Skirt	375	21331	375R40	115	24	C-9	7.37		5000						2a, 2b, 3b, 5e, 6a	Reflector Infrared Industrial-Light I.F., BB
		375	21334	375R40/1	115	24	C-9	7.50		5000		2700		1170		2a, 2b, 3b, 5e, 6a	Reflector Infrared Industrial-Clear Face, HRG, BB
400 Watts																	
R40	Med	400	17542	400R40/FL	120	24	CC-2V	6.75		2000		4400		4500		5b, 5c, 9b	Reflector Flood. Swimming Pool, BB, HRG
500 Watts																	
PS35	Mog Screw	500	21532	500	130	24	CC-8	9.37	7.00	1000		10850				5d, 5e	Clear, BB
R40	Mog Screw	500	21734	500R/3FL	120	24	CC-2V	7.25		2000		6000		8000		2a, 2b, 5b, 9e	Reflector Flood-I.F. BB, HRG
		500	21736	500R/3FL	130	24	CC-2V	7.25		2000		6000		8000		2a, 2b, 5b, 9e	Reflector Flood-I.F., BB, HRG
R40	Med	500	48316	500R40/5FL/SLV	120	24	CC-2V	6.75		2000		5500		3200		9k	Reflector-Swimming Pool. BB, HRG
PAR64	Mog End Pr	500	39411	500PAR64/MFL	230	12	CC-13	6		2000		5500	2700			1a, 2a, 5b, 5c, 9n	Medium Flood
		500	39414	500PAR64/WFL	230	12	CC-13	6		2000		5500	2700			1a, 2a, 5b, 5c, 9n	Wide Flood
	ExMog EndPr	500	39406	500PAR64/NSP	120	12	CC-13	6		2000		6500	2800	110000		1a, 2a, 5b, 5c, 9n	Narrow Reflector
		500	39409	500PAR64/MFL	120	12	CC-13	6		2000		6500	2800	37000		1a, 2a, 5b, 5c, 9n	Medium Flood
		500	39412	500PAR64/WFL	120	12	CC-13	6		2000		6500	2800	13000		1a, 2a, 5b, 5c, 9n	Wide Flood
1000 Watts																	
PS52	Mog Screw	1000	22260	1000	130	12	CC-8	13	9.50	1000		23740				5d, 5e	Clear, BB
Export Only																	
40 Watts																	
A19	Med	40	13255	40A 48PK	120	48	CC-6	4.331	3.15	1000	0.8	505	2700				Standard
		40	13257	40A/W 48PK	120	48	CC-6	4.331	3.15	1000	0.8	490	2700				Standard
		40	48687	40A/RVL 48PK	120	48	CC-6	4.409	3.15	1000	0.8	360	2725				Reveal® Soft-White
		40	97470	40A/CL-2PK	120	24	CC-6	4.331	3.15	1500	0.8	480	2700				Clear

* Based on 3 hours per day use.
** Based on 3 hours per day use, $0.11 per Kwh

For the most up-to-date product information, see www.gelighting.com. To convert inches to millimeters, multiply by 25.4.
All warning and caution notices found at the end of this section (page 1-20).

Bulb Shape	Base	Watts	Order Code	Description	Volts	Case Qty	Filament Design	MOL (in)	LCL (in)	Rated Life (hrs)	Rated Life (yrs*)	Lumens Initial	Color Temp K	CBCP	Annual Operating Costs**	Warning and Caution Notices	Additional Information
Export Only (continued)																	
60 Watts																	
A19	Med	60	41026	60A 48PK	120	48	CC-6	4.311	2.897	1000	0.8	865	2800				Standard
		60	41028	60A/W 48PK	120	48	CC-6	4.331	3.15	1000	0.8	840	2800				Standard
		60	97490	60A/CL-2PK	120	24	CC-8	4.331	3.15	1000	0.8	870	2800				Clear
		60	97496	60A/W/LL-2PK	120	24	CC-6	4.331	3.15	1000	0.8	820	2800				Soft-White, Long Life
75 Watts																	
A19	Med	75	41030	75A 48PK	120	48	CC-6	4.43	3.12	750	0.7	1170	2800		$9.03		Standard
		75	97779	75A-2/24PK	120	48	CC-6	4.43	3.12	750	0.7	1170	2800		$9.03		Standard
		75	97468	75A/CL-2PK	120	24	CC-6	4.43	3.12	750	0.7	1170	2750		$9.03		Clear
		75	48689	75A/RVL 48PK	120	48	CC-8	4.43	3.12	750	0.7	830	2850		$9.03		Reveal® Soft-White
		75	41032	75A/W 48PK	120	48	CC-6	4.43	3.12	750	0.7	1170	2800		$9.03		Soft-White
		75	97497	75A/W/LL-2PK	120	24	CC-6	4.43	3.12	1125	1.0	1125	2800		$9.03		Soft-White, Long Life
PAR38	Med Skirt	75	14510	75PAR/FL/EX-120	120	12	CC-6	5.31		2000		765	2700	1750		1a, 2a, 2b	Flood
85 Watts																	
PAR38	Med Skirt	85	14509	100PAR/FL85WM/EX	120	6	CC-6	5.31		2000		930	2700	2000		1a, 2a, 2b	Watt-Miser®, Flood, Reduced Wattage
100 Watts																	
A19	Med	100	41034	100A 48PK	120	48	CC-8	4.43	3.12	750	0.7	1710	2800		$12.05		Standard
		100	97780	100A-2/24PK	120	24	CC-8	4.43	3.12	750	0.7	1710	2800		$12.05		Standard
		100	97489	100A/CL-2PK	120	24	CC-8	4.43	3.12	750	0.7	1730	2800		$12.05		Clear
		100	48690	100A/RVL 48PK	120	48	CC-8	4.43	3.12	750	0.7	1260	2850		$12.05		Reveal®
		100	41036	100A/W 48PK	120	48	CC-8	4.43	3.12	750	0.7	1690	2800		$12.05		Soft White
		100	97761	100A/W/LL-2PK	120	24	CC-8	4.43	3.12	1125	1.0	1600	2800		$12.05		Long Life Soft White
120 Watts																	
PAR38	Med Skirt	120	14501	150PAR/FL/120WM/	120	12	CC-6	5.31		2000		1370	2725	3600		1a, 2a, 2b	Watt-Miser®, Flood, Reduced Wattage
		120	14502	150PAR/SP/120WM/	120	12	CC-6	5.31		2000		1370	2725	9200		1a, 2a, 2b	Watt-Miser®, Spot, Reduced Wattage
150 Watts																	
PAR38	Med Skirt	150	14531	150PAR/FL/EX-120	120	12	CC-6	5.31		2000		1740	2775	3100		1a, 2a, 2b	Flood
		150	14535	150PAR/SP/EX-120	120	12	CC-6	5.31		2000		1740	2775	12000		1a, 2a, 2b	Spot
Airport																	
30 Watts																	
T10	Med PF	30	23294	6.6A/T10/1P	4.5	60	C-2V	3.90	1.50	1000		400					Clear
		45	23295	6.6A/T10P	6.8	60	C-2V	3.60	1.50	1000		675					Clear
40 Watts																	
T10	Med PF	40	15921	40T10P	120	60	CC-2V	3.90	1.50	1000		400					Clear
200 Watts																	
T14	Med PF	200	23298	6.6A/T14P		24	C-13	5.75	2.18			4900					Clear
620 Watts																	
PS40	Mogul PF	620	21950	620PS40P	120	24	C-9	10.06	5.68	3000		11200					Clear
		620	21952	620PS40P	130	24	C-9	10.06	5.68	3000		11200					Clear
Landscape Lighting																	
4 Watts																	
T5	Wedge	4	71479	901/LAND/BP2	12	48	C-2R	1.49	0.08	500		36					
7 Watts																	
T5	Wedge	7	71480	918/LAND/BP2	12	48	C-2R	1.49	0.08	500		82					
11 Watts																	
T5	Wedge	11	71481	923/LAND/BP2	12	48	C-2R	1.49	0.08	500		157					
Decorative																	
3 Watts																	
CA10	Cand	3	73254	3CAC/FF/CD1-6PK	120	6		4.13		2000							Flicker Flame

* Based on 3 hours per day use.
** Based on 3 hours per day use, $0.11 per Kwh

For the most up-to-date product information, see www.gelighting.com. To convert inches to millimeters, multiply by 25.4.
All warning and caution notices found at the end of this section (page 1-20).

Bulb Shape	Base	Watts	Order Code	Description	Volts	Case Qty	Filament Design	MOL (in)	LCL (in)	Rated Life (hrs)	Rated Life (yrs*)	Lumens Initial	Color Temp K	CBCP	Annual Operating Costs**	Warning and Caution Notices	Additional Information
Decorative (continued)																	
15 Watts																	
B8	Cand	15	75257	15BC/8/CF2/PK5-MP	120	5	C-7A	3.87		1500	1.4	105	2500		$1.81		Blunt Tip, Ceiling Fan, Vibration Resistant, Multipurpose Deco
B10	Cand	15	74033	15BC/RVL/CF-T4/6	120	6	C7-A	3.87		1500	1.4	80	2550		$1.81		Reveal®, Blunt Tip, Ceiling Fan, Vibration Resistant
		15	74974	15BC10/CF/CD2-MPD	120	5	C7-A	3.87		1500	1.4	95	2500		$1.81		Blunt Tip, Ceiling Fan, Vibration Resistant, Multipurpose Deco
CA8	Cand	15	48396	15CAC CD2 6PK	120	30	C-7A	4.12		1500	1.4	115	2500		$1.81		Bent Tip
F10	Cand	15	48395	15FC CD2 6PK	120	30	C-7A	4.37		1500	1.4	105	2500		$1.81		Clear-Chandelier
		15	75256	15FC/AU/CF2/5-MP	120	5	C-7A	4.37		1500	1.4	105	2300		$1.81		Auradescent, Flame Tip, Ceiling Fan, Vibration Resistant, Multipurpose Deco
		15	48394	15FC/AU CD2 6PK	120	30	C-7A	4.37		1500	1.4	105	2300		$1.81		Auradescent, Flame Tip
25 Watts																	
B8	Cand	25	75258	25BC8/CF2/PK5-MP	120	5	C-7A	3.87		1500	1.4	160	2500		$3.01		Blunt Tip, Ceiling Fan, Vibration Resistant, Multipurpose Deco
B10	Cand	25	74979	25BC10RVL/CF2-MP	120	5	C-7A	3.87		1500	1.4	135	2550		$3.01		Reveal®, Blunt Tip, Ceiling Fan, Vibration Resistant, Multipurpose Deco
		25	74978	25BC10/CF/CD2-MP	120	5	C-7A	3.87		1500	1.4	155	2500		$3.01		Blunt Tip, Ceiling Fan, Vibration Resistant, Multipurpose Deco
		25	15787	25BC 25PK	120	200	C-7A	3.75		1500	1.4	220	2500		$3.01		Clear, Blunt Tip
		25	48700	25BC/RVL CD2	120	30	C-7A	3.75		1500	1.4	150	2550		$3.01		Reveal®, Blunt Tip
	Med	25	22756	25BM CD2	120	60	C-7A	4.62		1500	1.4	170	2500		$3.01		Clear, Blunt Tip
B13	Med	25	75322	25BM/C33/CF2-TP5	120	5	C-9	4.62		1500	1.4	135	2500		$3.01		Clear Ceiling Fan, Chandelier, Multipurpose Deco
CA10	Cand	25	15777	25CAC 25PK	120	200	CC-2V	4.12		1500	1.4	220	2500		$3.01		Clear, Bent Tip
		25	76234	25CAC/CL/CD4-MPD	120	4	CC-2V	4.12		1500	1.4	220	2500		$3.01		Clear, Bent Tip
		25	66104	25CAC/CL/CD2-MPD	120	4	CC-2V	4.12		1500	1.4	220	2500		$3.01		Clear, Bent Tip
		25	76235	25CAC/F/CD4-MPD	120	4	CC-2V	4.12		1500	1.4	155	2500		$3.01		White, Bent Tip
		25	66105	25CAC/F/CD2-MPD	120	4	CC-2V	4.12		1500	1.4	215	2500		$3.01		White, Bent Tip
		25	40045	25CAC/L	120	120	CC-2V	4.12		4000	3.7	210	2500		$3.01		Clear, Bent Tip, Brass Base, LL
		25	16365	25CAC/L/BB-CD4	120	24	CC-2V	4.12		3000	2.7	210	2500		$3.01		Clear, Bent Tip
F15	Med	25	75337	25FM/C/CF2-TP4	120	4	C-9	4.37		1500	1.4	170	2400		$3.01		Clear, Flame Ceiling Fan
		25	75339	25FM/A/CF2-TP4	120	4	C-9	4.37		1500	1.4	120	2400		$3.01		Ceiling Fan
		25	75340	25FM/AU/CF2-TP4	120	4	C-9	4.37		1500	1.4	170	2400		$3.01		Auradescent Ceiling Fan
		25	75338	25FM/W/CF2-TP4	120	4	C-9	4.37		1500	1.4	140	2400		$3.01		White, Ceiling Fan
G16.5	Cand	25	11303	25GC 12PK	120	120	CC-2V	3.00		1500	1.4	220	2500		$3.01	5e, 9d	Clear, Globe, BDTH
		25	17722	25GC CD2	120	60	CC-2V	3.00		1500	1.4	195	2500		$3.01	5e, 9d	Clear, Globe, BDTH
		25	48703	25GC/RVL CD2	120	30	CC-2V	3.00		1500	1.4	145	2525		$3.01	5e, 9d	Reveal®, Globe, BDTH
		25	72800	25GC/CL/CD2-4PK	120	4	CC-2V	3.00		1500	1.4	195	2500		$3.01	5e, 9d	Clear, Globe, BDTH
		25	72801	25GC/AU/CD2 4PK	120	4	CC-2V	3.00		1500	1.4	220	2500		$3.01	5e, 9d	Auradescent Globe, BDTH
		25	44412	25GC/W PQ2/6	120	30	CC-2V	3.00		1500	1.4	180	2500		$3.01	5e, 9d	White, Globe, BDTH
		25	39679	25GC/W 12PK	120	120	CC-2V	3.00		1500	1.4	180	2500		$3.01	5e, 9d	White, Globe, BDTH
		25	15790	25GC 25PK	120	100	CC-2V	3.00		1500	1.4	195	2500		$3.01	5e, 9d	Clear, Globe, BDTH
G16.5	Med	25	31106	25GM/CL-PQ2/6	120	30	CC-2V	3.00		1500	1.4	160	2500		$3.01	5e, 9d	Clear, Globe, BDTH
		25	31107	25GM/W-PQ2/6	120	30	CC-2V	3.00		1500	1.4	180	2500		$3.01	5e, 9d	Clear, Globe, BDTH
G25	Med	25	12982	25G25/W 6PK	120	6	CC-6	4.50		1500	1.4	180	2500		$3.01	5e, 9d	Clear, Globe, BDTH
		25	12983	25G25 6PK	120	6	CC-6	4.50		1500	1.4	190	2500		$3.01	5e, 9d	Clear, Globe, BDTH
		25	25546	25G25/W CPK	120	24	CC-6	4.50		1500	1.4	180	2500		$3.01	5e, 9d	White, Globe, BDTH
		25	25545	25G25 CPK	120	24	CC-6	4.50		1500	1.4	190	2500		$3.01	5e, 9d	Clear, Globe, BDTH

* Based on 3 hours per day use.
** Based on 3 hours per day use, $0.11 per Kwh

For the most up-to-date product information, see www.gelighting.com. To convert inches to millimeters, multiply by 25.4.
All warning and caution notices found at the end of this section (page 1-20).

Bulb Shape	Base	Watts	Order Code	Description	Volts	Case Qty	Filament Design	MOL (in)	LCL (in)	Rated Life (hrs)	Rated Life (yrs*)	Lumens Initial	Color Temp K	CBCP	Annual Operating Costs**	Warning and Caution Notices	Additional Information
Decorative (continued)																	
40 Watts																	
B8	Cand	40	75259	40BC8/CF2/PK5-MP	120	5	C-7A	3.87		1500	1.4	300	2500		$4.82		Clear, Blunt Tip, Ceiling Fan, Multipurpose Deco
B10	Cand	40	74035	40BC/RVL/CF-T4/6	120	6	C-7A	3.87		1500	1.4	230	2550		$4.82		Reveal®, Clear, Blunt Tip, Ceiling Fan
		40	75034	40BC10RVL/CF2-MP5	120	5	C-7A	3.87		1500	1.4	230	2550		$4.82		Reveal®, Clear, Blunt Tip, Ceiling Fan, Multipurpose Deco
		40	75033	40BC10/CF/CD2-MP	120	5	C-7A	3.87		1500	1.4	280	2500		$4.82		Clear, Blunt Tip, Multipurpose Deco
		40	15788	40BC 25PK	120	200	CC-2V	3.75		1500	1.4	370	2500		$4.82		Clear, Blunt Tip
		40	48701	40BC/RVL CD2	120	30	CC-2V	3.75		1500	1.4	230	2550		$4.82		Reveal® Clear, Blunt Tip
B10	Med	40	12993	40BM CD2	120	60	C-9	3.75		1500	1.4	380	2500		$4.82		Clear, Blunt Tip
		40	48699	40BM/RVL CD2	120	30	C-9	3.75		1500	1.4	285	2550		$4.82		Reveal®, Blunt Tip
B13	Med	40	75317	40BFM/CF2/PK4-MP	120	4	C-9	4.62		1500	1.4	350	2500		$4.82		Facet, Ceiling Fan
		40	72780	40BM/RVL/CD2-4PK	120	4	C-9	4.62		1500	1.4	285	2550		$4.82		Clear, Bent Tip
CA10	Med	40	75335	40CAM/CF6/PK5-MP	120	5	CC-2V	4.56		1500	1.4	350	2500		$4.82		Clear, Bent Tip, Multipurpose Deco
		40	76230	40CAM/CL/CD4-MPD	120	4	CC-2V	4.56		1500	1.4	330	2500		$4.82		Clear, Bent Tip
		40	66109	40CAM/CL/CD2-MPD	120	4	CC-2V	4.56		1500	1.4	330	2500		$4.82		Clear, Bent Tip
		40	48342	40CAM/L/BB CD4	120	30	CC-2V	4.56		3000	2.7	360	2500		$4.82		Post Light
		40	22813	40CAM/LL/BB CD2	120	30	CC-2V	4.56		3000	2.7	360	2500		$4.82		Clear, Bent Tip, Long Life, Brass Base
CA10	Cand	40	15778	40CAC 25PK	120	200	CC-2V	4.12		1500	1.4	370	2500		$4.82		Clear, Bent Tip
		40	76236	40CAC/CL/CD2-MPD	120	4	CC-2V	4.12		1500	1.4	370	2500		$4.82		Clear, Bent Tip
		40	76237	40CAC/CL/CD4-MPD	120	4	CC-2V	4.12		1500	1.4	370	2500		$4.82		Clear, Bent Tip
		40	76238	40CAC/F/CD4-MPD	120	4	CC-2V	4.12		1500	1.4	360	2500		$4.82		White, Bent Tip
		40	66106	40CAC/F/CD2-MPD	120	4	CC-2V	4.12		1500	1.4	360	2500		$4.82		White, Bent Tip
		40	48341	40CAC/L/BB-CD4	120	30	CC-2V	4.12		3000	1.4	360	2500		$4.82		Clear, Bent Tip, Brass Base, Long Life
F15	Med	40	75341	40FM/C/CF2-TP4	120	4	C-6	4.37		1500	1.4	350	2500		$4.82		Clear, Flame, Ceiling Fan, Vibration Resistant
		40	75343	40FM/AU/CF2-TP4	120	4	C-6	4.37		1500	1.4	350	2500		$4.82		Auradescent, Flame, Ceiling Fan, Vibration Resistant
		40	75342	40FM/W/CF2-TP4	120	4	C-6	4.37		1500	1.4	315	2500		$4.82		White, Flame, Ceiling Fan, Vibration Resistant
		40	75344	40FM/A/CF2-TP4	120	4	C-6	4.37		1500	1.4	140	2500		$4.82		Amber, Ceiling Fan, Vibration Resistant
G16.5	Cand	40	14958	40GC 12PK	120	120	CC-2V	3.00		1500	1.4	320	2500		$4.82	5e, 9d	Clear, Globe, BDTH
		40	17730	40GC CD2	120	60	CC-2V	3.00		1500	1.4	320	2500		$4.82	5e, 9d	Clear, Globe, BDTH
		40	44414	40GC/W PQ2/6	120	30	CC-2V	3.00		1500	1.4	290	2500		$4.82	5e, 9d	White, Globe, BDTH
		40	72802	40GC/CL/CD2-4PK	120	4	CC-2V	3.00		1500	1.4	320	2500		$4.82	5e, 9d	Clear, Globe, BDTH
		40	72803	40GC/AU/CD2-4PK	120	4	CC-2V	3.00		1500	1.4	370	2500		$4.82	5e, 9d	Auradescent, Globe, BDTH
		40	48704	40GC/RVL CD2	120	30	CC-2V	3.00		1500	1.4	240	2550		$4.82	5e, 9d	Reveal®, Globe, BDTH
		40	72209	40GC/W/CD2-4PK	120	4	CC-2V	3.00		1500	1.4	290	2500		$4.82	5e, 9d	White, Globe, BDTH
		40	48705	40GC/W/RVL CD2	120	30	CC-2V	3.00		1500	1.4	220	2550		$4.82	5e, 9d	Reveal® White, Globe, BDTH
G16.5	Med	40	31109	40GM/CL-PQ2/6	120	30	CC-2V	3.00		1500	1.4	310	2500		$4.82	5e, 9d	Clear, Globe, BDTH
		40	31110	40GM/W-PQ2/6	120	30	CC-2V	3.00		1500	1.4	330	2500		$4.82	5e, 9d	White, Globe, BDTH
G25	Med	40	12979	40G25/W 6PK	120	6	CC-6	4.50		1500	1.4	370	2500		$4.82	5e, 9d	White, Globe, BDTH
		40	12980	40G25 6PK	120	6	CC-6	4.50		1500	1.4	410	2500		$4.82	5e, 9d	Clear, Globe, BDTH
		40	48694	40G25C/RVL PQ1/6	120	6	CC-6	4.50		1500	1.4	265	2550		$4.82		Reveal®
		40	48695	40G25W/RVL PQ1/6	120	6	CC-6	4.50		1500	1.4	250	2550		$4.82		Reveal®
		40	25547	40G25/W CPK	120	24	CC-6	4.50		1500	1.4	370	2500		$4.82	5e, 9d	White, Globe, BDTH
		40	25548	40G25 CPK	120	24	CC-6	4.50		1500	1.4	410	2500		$4.82	5e, 9d	Clear, Globe, BDTH
G40	Med	40	36191	40G40/W 6PK	120	6	CC-6	6.93		2500	2.3	395	2500		$4.82	5e, 9d	White, Globe, BDTH

* Based on 3 hours per day use.
** Based on 3 hours per day use, $0.11 per Kwh

For the most up-to-date product information, see www.gelighting.com. To convert inches to millimeters, multiply by 25.4.
All warning and caution notices found at the end of this section (page 1-20).

Bulb Shape	Base	Watts	Order Code	Description	Volts	Case Qty	Filament Design	MOL (in)	LCL (in)	Rated Life (hrs)	Rated Life (yrs*)	Lumens Initial	Color Temp K	CBCP	Annual Operating Costs**	Warning and Caution Notices	Additional Information
Decorative (continued)																	
60 Watts																	
B10	Cand	60	76229	60BC10/CF/CD2-MP	120	4	C-7A	3.87		1500	1.4	540	2500		$7.23		Clear, Blunt Tip, MultiPurpose Deco
		60	48714	60BC/RVL CD2	120	30	C-7A	3.87		1500	1.4	490	2550		$7.23		Reveal®
		60	74036	60BC/RVL/CF-T4/6	120	6	C-7A	3.75		1500	1.4	455	2550		$7.23		Reveal® Clear, Ceiling Fan, Blunt Tip
		60	75201	60BC10RVL/CF2-MP	120	6	C-7A	3.75		1500	1.4	455	2550		$7.23		Reveal® Clear, Ceiling Fan, Blunt Tip
B13	Med	60	48713	60BM/RVL CD2	120	30	C-9	4.62		1500	1.4	485	2650		$7.23	2c, 9i	Reveal®, Blunt Tip
		60	72781	60BM/RVL/CD2-4PK	120	4	C-9	4.62		1500	1.4	485	2650		$7.23	2c, 9i	Reveal®, Blunt Tip
CA10	Cand	60	15781	60CAC 25PK	120	200	CC-2V	4.12		1500	1.4	650	2500		$7.23		Clear, Bent Tip
		60	76239	60CAC/CL/CD4-MPD	120	4	CC-2V	4.12		1500	1.4	650	2500		$7.23		Clear, Bent Tip
		60	66107	60CAC/CL/CD2-MPD	120	4	CC-2V	4.12		1500	1.4	640	2500		$7.23		Clear, Bent Tip
		60	76240	60CAC/F/CD4-MPD	120	4	CC-2V	4.12		1500	1.4	640	2500		$7.23		White, Bent Tip
		60	66108	60CAC/F/CD2-MPD	120	4	CC-2V	4.12		1500	1.4	640	2500		$7.23		White, Bent Tip
G16.5	Cand	60	72777	60GC/CD2-4PK	120	4	CC-2V	3.00		1500	1.4	600	2500		$7.23	5e, 9d	Clear, Globe, BDTH
		60	23091	60GC CD2	120	60	CC-2V	3.00		1500	1.4	600	2500		$7.23	5e, 9d	Clear, Globe, BDTH
		60	44723	60GC/W PQ2/6	120	30	CC-2V	3.00		1500	1.4	530	2500		$7.23	5e, 9d	White, Globe, BDTH
G40	Med	60	14187	60G40 6PK	120	6	CC-6	6.93		2500	2.3	660	2600		$7.23		Clear, Globe
		60	49780	60G40/W 6PK	120	6	CC-6	6.93		2500	2.3	660	2600		$7.23		White, Globe
		60	16741	60G40/W CPK	120	24	CC-6	6.93		2500	2.3	660	2600		$7.23		White, Globe
75 Watts																	
E17	Med	75	73289	75E17/TF-4PK	120	4	CC-6	5.00		4000		825					
		75	28917	75E17/TF-PK4	120	20	CC-6			4000	3.7	825					
G40	Med	75	36193	75G40/W 6PK	120	6	CC-6	6.93		2500	2.3	870	2600		$9.03		White, Globe
100 Watts																	
F20	Med	100	44540	100F20/TF PQ1/6	120	30	CC-9	5.00		3000		900					Post Light, Teflon® Coated, Saf-T-Gard® BB
G40	Med	100	16742	100G40/W CPK	120	24	CC-6	6.93		2500	2.3	1260	2700		$12.05		White, Globe
		100	49781	100G40/W 6PK	120	6	CC-6	6.93		2500	2.3	1260	2700		$12.05		White, Globe
150 Watts																	
G40	Med	150	16585	150G40/W	120	24	CC-6	6.93		2500	2.3	2130	2800		$18.07		White, Globe
Portable Lighting Products																	
R30	Med	65	44848	PLK 1 UNIT	120	4	CC-6	5.37		2000						2a, 5e, 9k	Plant Light Kit includes one 75R30/PL Plant Light lamp, UL listed holder and information booklet.
Contractor Packs																	
G40	Med	60	16741	60G40/W CPK	120	24	CC-6	6.93		2500	2.3	660	2600		$7.23		White, Globe
		100	16742	100G40/W CPK	120	24	CC-6	6.93		2500	2.3	1260	2700		$12.05		White, Globe
G25	Med	25	25546	25G25/W CPK	120	24	CC-6	4.50		1500	1.4	180	2500		$3.01	5e, 9d	White, Globe, BDTH
		25	25545	25G25 CPK	120	24	CC-6	4.50		1500	1.4	190	2500		$3.01	5e, 9d	Clear, Globe, BDTH
		40	25547	40G25/W CPK	120	24	CC-6	4.50		1500	1.4	370	2500		$4.82	5e, 9d	White, Globe, BDTH
		40	25548	40G25 CPK	120	24	CC-6	4.50		1500	1.4	410	2500		$4.82	5e, 9d	Clear, Globe, BDTH

* Based on 3 hours per day use.
** Based on 3 hours per day use, $0.11 per Kwh

For the most up-to-date product information, see www.gelighting.com. To convert inches to millimeters, multiply by 25.4.
All warning and caution notices found at the end of this section (page 1-20).

Warning and Caution Notices

1

⚠ WARNING

Risk of electric shock

a. Turn off power before inspection, installation or removal

2

⚠ WARNING

Risk of fire

a. Keep combustible materials away from lamp
b. Use in fixture rated for this product
c. Use in fixture rated for this product – see instructions
d. Operate base down to horizontal only
e. Keep away from bed coverings, drapes and other combustible materials
f. Do not use in enclosed fixture or with lamp shade
g. Use in a high intensity fixture rated for this product
h. Do not use as a night light
i. Burning position base down only

3

⚠ WARNING

Lamp emits IR radiation which may cause eye injury

a. Use in fixture approved for this product
b. Do not use on infant, disabled, sleeping, or unconscious person/ animal unable to avoid potential injury

4

⚠ WARNING

Pressurized lamp – unexpected rupture may cause injury, fire, or property damage

a. Use eye protection when handling lamp
b. Avoid direct water/liquid contact
c. Use in enclosed fixture rated for this product
d. Operate lamp only in specified position

5

⚠ WARNING

Unexpected lamp rupture may cause injury, fire, or property damage

a. Do not exceed rated voltage
b. Avoid direct water/liquid contact
c. Use in enclosed fixture rated for this product
d. Do not use lamp if outer glass is scratched or broken
e. Avoid direct water, liquid, or metal contact

6

⚠ WARNING

Risk of burn

a. Do not touch operating lamp

7

⚠ CAUTION

Risk of burn

a. Allow lamp to cool before handling
b. Allow lamp/fixture to cool before handling
c. Do not touch operating lamp

8

⚠ CAUTION

Lamp may shatter and cause injury if broken

a. Do not use excessive force when installing lamp

9

Operating Instructions

a. Burning position – base up
b. Burning position – horizontal
c. Burn base down only
d. Burn base down to horizontal
e. For best performance burn lamp within 45 degrees of vertical base up
f. For best performance burn within 45 degree of base down to horizontal
g. For best performance operate base up within 30° of vertical
h. For best performance burn base down
i. Do not burn in base up position
j. To produce all three levels of light, this lamp should be tightened firmly, but not forcibly, in the socket to assure that all contacts are connected
k. Should not be used in equipment where the base lamp will exceed 550°F (260°C)
l. Will operate in any burning position, but fixed-socket usage other than base up, or continuous burning in any position in ambient temperatures above 150°F (66°C), may result in some loss of protective coating
m. Reflectors and accessories may raise bulb temperature
n. For use with heat-resistant connector supported by bulb rim or metal shell of base
o. For best performance replace lamp if it blisters or darkens

Cross-Reference

GE Description	Osram/Sylvania Description	Philips Description
Order This GE Lamp	If you currently use these lamps	
Incandescent Lamps		
3S6/5 130V	3S6/5 130V	3S6/5 120-130V
4C7	4C7/BL/2PK	BC-4C7
4C7/W	4C7/W/2PK 120V	BC4C7/W
10S11N	10S11N/CL	10S11N
10S11N/F	10S11/IF	10S11N/IF
15S14/GR/CL 130V	15S14/CL 130V	–
40S11N/1/F	40S11/N/CF 120V	40S11N/F 120V
40R14/N/CD	40R14/N/RP	40R14/N
40T6 1/2	40T6.5/CL	40T6-1/2 120V
40T8	40T8	40T8
40T10	40T10	40T10
60T10F/CD	60T10/CF	60T10/641F
38A 130V	38A/CVP 130V	38A 120V
38A/CL 130V	not available in 130V	38A/CL 130V
40A15	40A15	40A15
40A 48PK	40A/CVP 130V	40A 130V
50A19/RS/SH	50A/RS/SL	50A/RS/TF 120V
50/150	50/150A/W	50/150T/SW
57A 130V	57A/CVP 130V	57A 130V
57A/CL 130V	57A/CL 130V	57A/CL 130V
60A15	60A15	60A15
60A 48PK	60A/CVP 130V	60A19/35
60A/RS 130V	60A/RS/2/RP 130V	–
60A/RS/STG	60A/RS/SL/RP 120V	–
60A/PL	60A/GRO	60A/AGRO
65R30FL/LL	–	65BR30/FL/LL
65R30/SP/LL	–	65BR30/SP/LL
71A 130V	71A/CVP 130V	71A 120V
71A/CL 130V	not available in 130V	71A/CL 130V
75A 48PK	75A/CVP 130V	75A
75A/RS/130	75A/RS/2/RP 130V	–
75A/RS/STG	75A21/RS/SL/RP 130V	75A/RH/TG 120-130V
95A 130V	95A/CVP 130V	95A 120V
95A/CL 130V	not available in 130V	95A/CL 130V
100A 48PK	100A/CVP 130V	100A 130V
100A/RS 130V	100A/RS/2/RP 130V	–
100A/RS/STG	100A/RS/SL/RP 120V	100A/RS/VS/BR/TG 120-130V
100A23	100A23 12V	100A 12V
150A21/RS	150A23/RS 130V	–
150A21/RS/STG	–	150A/35/RS/BR/TG 120-130V
150PS25/RS/STG	150PS25/RS/SL 120V	–
200PS30/RS/23/STG	200PS/RS/SL 120V	200PS30/RS/TF 120V
250R40/10	250R40/10	250R40/HR
300M	300M/CL	300-120V CLR PS30
300M/IF	300M/IF	300M/PS30IF 130V
15BC	15B10C/T	15BA9C
15FC	15FC	15F10C
25BC	25B10C/T	25B10-1/2C
25BM	25B10	25B13
25CAC	25B10C	25BA9C/CL
25CAC/F	25B10C/W	25BA9C/F
25CAC/L	25B10C/DL	25BA9C/4M
25CAM	–	25BA9-1/2

GE Description	Osram/Sylvania Description	Philips Description
Order This GE Lamp	If you currently use these lamps	
Incandescent Lamps (continued)		
25FM/CF	–	–
25GC	25G16.5C	25G16-1/2C
25GM	25G16.5	25G16-1/2
25G25	25G25	25G25
40BC	40B10C/T	40B10-1/2C
40BM	40B10	40B13
40CAC	40B10C	40BA9C/CL
40CAC/F	40B10C/F	40BA9C/F
40CAC/L	–	40BA9C/4M
40CAM	–	40BA9-1/2
40CAM/L	–	40BA9-1/2/LL
40FM/CF	–	–
40GC	40G16.5C	40G16-1/2C
40GM	40G16.5	40G16-1/2
40G25	40G25	40G25
60BC	60B10C/T	60B10-1/2C
60BM	60B10	60B13
60CAC	60B10C	60BA9C/CL
60CAC/F	60B10C/F	60BA9C/F
60CAM	–	60BA9-1/2
60FM/CF	–	–
60GC	60G16.5C	60G16-1/2C
60GM	60G16.5	60G16-1/2
60G25	60G25	60G25

Notes

Halogen Lamps

Bulb Identification

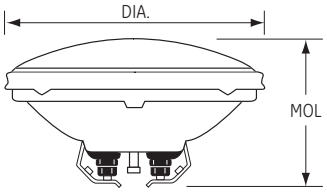

DIA. in.: Diameter of bulb at widest point.

MOL in.: Maximum Overall Length including base or pins.

LCL in.: Distance between the center of the filament and the Light Center Length reference plane.

Note: Lamp drawings are not drawn to scale. Be sure to check size and dimension information when identifying each lamp.

To convert inches to millimeters, multiply the dimension (in inches) by 25.4 (i.e. 1.5" x 25.4 = 38.1 mm).

Filament Identification

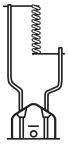

C-8
CC-8

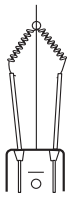

C-2V
CC-2V

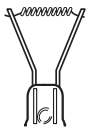

C-6
CC-6

C-8
CC-8

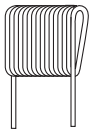

C-6
Oval

Base Identification

2-Pin
(Round)
GX5.3

Can DC Bay

2-Pin
GY6.35

Recessed
Single
Contact
R7s

Screw
Terminals

4" Leads

1" Ribbon
Leads

6" Flex
Leads

2-Pin
GU4

2-Pin
GU5.3

2-Pin
G4

Turn & Lock
GU7

GU10

G8

G9

2-Pin Pf

Min Screw
E10

DC Bay
BA15d

Min Cand
E11

Med Screw
E26

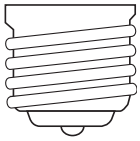

Mog Screw
E39

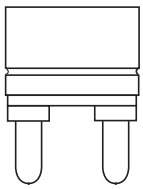

Mogul
BiPost
G38

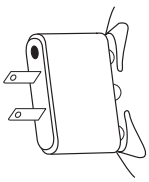

Ext. Mog
End Pr
GX16d

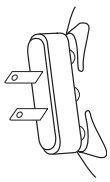

Mog End
PR
GX16d

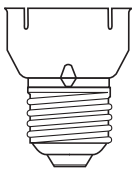

Med
Skirted
E26/50x39

Introduction

Halogen lamps provide a small, white light source with excellent color rendering. Unlike standard incandescent lamps, halogen lamps use a halogen gas which allows the bulbs to burn longer without sacrificing light output.

Compared to incandescent lamps, halogen lamps provide:

- Crisp, white light
- Compact size
- Long life
- Excellent beam control
- High lumen maintenance

Product Information

PAR38 vs. Standard Halogen

HIR™ Plus (PAR38) (pg 2-5)

- Up to 36% in energy savings
- Up to 50% longer life – 4200 hours

Standard Halogen (PAR38) (pg 2-5)

- Crisp, white light
- Life – 2000 hours

Halogen Compact PAR Lamps

Compact HIR™ PAR30 (pg 2-6)

- Long life – 4000 hours

Compact PAR30 Long Neck (pg 2-6)

- Energy-efficient replacement for R30 lamps
- Ideal for recessed fixtures

Compact PAR Halogen (PAR30/PAR20) (pg 2-6)

- Small size for "low profile" fixture
- Energy-efficient replacement for R20/R30 lamps
- Long life – 3000 hours

MR

Turn & Lock (TAL) ConstantColor® (MR16) (pg 2-8)

- User-friendly base...easy to install and remove
- Over 90% maintained light over life
- Excellent color maintenance
- Suitable for use in open fixtures

ConstantColor® Precise™ Cover Glass (MR16) (pg 2-9)

- Cover glass lens protects bulb from dust and dirt
- Suitable for use in open fixtures

ConstantColor® Precise™ (MR16) (pg 2-9)

- Precise beam control
- Excellent color maintenance
- Over 90% maintained light output over life
- Long life – up to 6000 hours (50-watt)

Precise™ Cover Glass IR (MR16) (pg 2-9)

- Energy-saving MR16
- 5000 hour lamp life

Standard MR (MR16/MR11) (pg 2-10)

- Small size for "low profile" look
- Crisp, white light

Linear Quartz

Linear Quartzline® HIR™ (pg 2-11)

- 30%-40% energy cost savings vs. standard quartz lamps
- 95% maintained light output over life
- Cooler operation increases fixture life

Headings in this catalog section

The following terms and descriptions can help you when checking Halogen lamp specifications and when ordering products. Within each product line, lamps are divided into families. Within families, lamps are listed by wattage. In each of these groups, lamps are listed alphabetically by bulb shape.

LCL (in): Distance between the center of the filament and the Light Center Length reference plane, in inches.

MOL (in): Maximum Overall Length in inches.

Rated Life (hours): Life (as defined by FTC Lamp Label Rules) is rated life in hours.

Filament Design: Filaments are designated by a letter combination in which C is a coiled wire filament, CC is a coiled wire that is itself wound into a larger coil, and SR is a straight ribbon filament. Numbers represent the type of filament-support arrangement.

Rated Life (years): Life (as defined by FTC Lamp Label Rules) is rated life in years.

Lumens Initial: Light output (as defined by FTC Lamp Label Rules) is rated lumens.

Energy Used – Nominal Watts: Energy Used (as defined by FTC Lamp Label Rules). To estimate energy consumption (kWh), multiply watts x hours of use and divide by 1000.

Case Quantity: Number of product units packed in a case.

Initial Color Temperature Kelvins (K): "Warmth" or "Coolness" of the lamp, measured in Kelvins (K). The higher the temperature, the cooler the appearance of the light.

Volts: Lamp data is based on operation at rated voltage.

Approximate CBCP (Center Beam Candlepower): For reflector-type lamps. Center Beam Candlepower is the intensity (candelas) at the center or maximum intensity of the beam.

Order Code: It is important to use this five-digit code when ordering to ensure that you receive the exact product you require.

Warnings and Caution Notices: See page 2-17 for information.

Bulb Shape: Bulb shape followed by its size (the maximum diameter of the bulb expressed in eighths of an inch).

Estimated Annual Operating Costs: Estimated yearly energy cost based on 3 hours/day, $0.11/kWh. Actual cost depends on rates and use.

Base: The type of base.

Lamp Description: The lamp's identification code.

Additional Information Typical application and/or other important information.

Bulb Shape	Base Type	Watts	Order Code	Description	Volts	Case Qty	Filament Type	MOL (in)	LCL (in)	Rated Life (hrs)	Rated Life (yrs*)	Lumens Initial	Initial Color Temp	CBCP	Annual Operating Costs**	Warning and Caution Notices	Additional Information
Halogen Par 38 Lamps																	
Retail HIR™ & Silv-IR																	
PAR38	Med Skirt	50	46168	50PAR/HIR/S/SP10	120	12		5.31		4000		800	2750	140000		1a,2a,4f,9a,10c	Spotlight - Heavy Duty Filament

50 PAR / HIR / SP 10

- 50 — Identifies the lamp's wattage.
- PAR — Identifies the lamp shape and the bulb diameter in eighths of inches.
- HIR — Identifies the lamp type.
- SP — Identifies as Spotlight.
- 10 — Identifies beam angle, code may also include packaging information.

WHEN YOU DON'T KNOW THE LAMP DESCRIPTION

1. Identify bulb shape next to lamp information.
2. Measure bulb diameter using ruler in Appendix section page D-1 to determine width in eighths of an inch.
3. Identify base type using table on page 2-2.
4. Find your lamp in the table containing the bulb shape, size and base, which are all listed by wattage.

Halogen Brand Name Cross-reference

GE	Osram/Sylvania	Philips
HIR™ PLUS	—	Long Life IRC
Standard Halogen PAR	Capsylite® PAR	Masterline™ 2000
Compact PAR	Capsylite® PAR	Masterline™ PAR
Turn & Lock (TAL) ConstantColor®	—	—
ConstantColor® Precise™	Tru-Aim Titan®	Continuum Color®
Precise™ IR	Tru-Aim® IR™	Masterline™ ES IRC
Standard MR16	Tru-Aim®	Continuum®
Halogen A-Line	Capsylite® A-Line (Midbreak)	Halogena®

ATTENTION: This brand-name cross reference chart is provided only as a quick reference. Other lamp company brand listings may only represent a near equivalent, versus an identical match to GE Lighting brands. Individual lamp manufacturers' performance specifications should be consulted. Lamp performance may be affected by environmental conditions, and/or other auxiliary equipment.

Halogen PAR 38 Lamps

Bulb Shape	Base Type	Watts	Order Code	Description	Volts	Case Qty	Filament Type	MOL (in)	LCL (in)	Rated Life (hrs)	Rated Life (yrs*)	Initial Lumens	Initial Color Temp	CBCP	Annual Operating Costs**	Warning and Caution Notices	Additional Information
HIR™ Plus(+)																	
PAR38	Med Skirt	45	90512	45PAR/HIR+/SP10	120	12	CC-8	5.31		4200	3.8	870	2750	14100	$5.42	1a,2a,4f,9a,10c	Spotlight
		45	90513	45PAR/HIR+/FL25	120	12	CC-8	5.31		4200	3.8	870	2750	3500	$5.42	1a,2a,4f,9a,10c	Floodlight
		48	90515	48PAR/HIR+/SP10	120	12	CC-8	5.31		4200	3.8	970	2750	15500	$5.78	1a,2a,4f,9a,10c	Spotlight
		48	90519	48PAR/HIR+/FL25	120	12	CC-8	5.31		4200	3.8	970	2750	3800	$5.78	1a,2a,4f,9a,10c	Floodlight
		50	62713	50PARHIR+3KSP10T	120	6	CC-8	5.31		2600	2.4	900	2800	13700	$6.02	1a,2a,4f,9a,10c	Spotlight
		50	62714	50PARHIR+3KFL25T	120	6	CC-8	5.31		2600	2.4	900	2800	3400	$6.02	1a,2a,4f,9a,10c	Floodlight
		50	66283	50PARHIR+3KS10P2	120	3	CC-8	5.31		2600	2.4	900	2800	13700	$6.02	1a,2a,4f,9a,10c	Spotlight
		50	66284	50PARHIR+3KF25P2	120	3	CC-8	5.31		2600	2.4	900	2800	3400	$6.02	1a,2a,4f,9a,10c	Floodlight
		55	71446	55PAR/HIR+/SP10	120	12	CC-8	5.31		4200	3.8	1120	2750	17500	$6.62	1a,2a,4f,9a,10c	Spotlight
		55	71598	55PAR/HIR+/FL25	120	12	CC-8	5.31		4200	3.8	1120	2750	4100	$6.62	1a,2a,4f,9a,10c	Floodlight
		55	69819	55PAR/HIR+/WFL	120	12	CC-8	5.31		4200	3.8	1120	2750	1200	$6.62	1a,2a,4f,9a,10c	Wide Floodlight
		60	90520	60PAR/HIR+/SP10	120	12	CC-8	5.31		4200	3.8	1260	2800	19000	$7.23	1a,2a,4f,9a,10c	Spotlight
		60	90529	60PAR/HIR+/FL25	120	12	CC-8	5.31		4200	3.8	1260	2800	4700	$7.23	1a,2a,4f,9a,10c	Floodlight
		67	90601	67PAR/HIR+/SP10	120	12	CC-8	5.31		4200	3.8	1500	2750	22000	$8.07	1a,2a,4f,9a,10c	Spotlight
		67	90602	67PAR/HIR+/FL25	120	12	CC-8	5.31		4200	3.8	1500	2800	5000	$8.07	1a,2a,4f,9a,10c	Floodlight
		70	68979	70PARHIR+3KS10P1	121	6	CC-8	5.31		3000	2.7	1305	19000	2850	$8.43	1a,2a,4f,9a,10c	Spotlight
		70	68980	70PARHIR+3KS8P1	122	6	CC-8	5.31		3000	2.7	1305	26000	2850	$8.43	1a,2a,4f,9a,10c	Narrow Spotlight
		70	68978	70PARHIR+3KF25P1	123	6	CC-8	5.31		3000	2.7	1305	4500	2850	$8.43	1a,2a,4f,9a,10c	Floodlight
		80	66302	80PARHIR+3KS10P1	120	6	CC-8	5.31		3000	2.7	1600	2900	2270	$9.64	1a,2a,4f,9a,10c	Spotlight
		80	66303	80PARHIR+3KF25P1	120	6	CC-8	5.31		3000	2.7	1600	2900	5200	$9.64	1a,2a,4f,9a,10c	Floodlight
		80	66306	80PARHIR+3KS10P2	120	3	CC-8	5.31		3000	2.7	1600	2900	22700	$9.64	1a,2a,4f,9a,10c	Spotlight, Twin Pack
		80	66307	80PARHIR+3KF25P2	120	3	CC-8	5.31		3000	2.7	1600	2900	5200	$9.64	1a,2a,4f,9a,10c	Floodlight, Twin Pack
		83	90605	83PAR/HIR+/SP10	120	12	CC-8	5.31		4000	3.8	2030	2850	30000	$10.00	1a,2a,4f,9a,10c	Spotlight
		83	90606	83PAR/HIR+/FL25	120	12	CC-8	5.31		4200	3.8	2030	2850	7000	$10.00	1a,2a,4f,9a,10c	Floodlight
		90	62715	90PARHIR+3KSP10T	120	6	CC-8	5.31		3000	2.7	1900	2900	26500	$10.84	1a,2a,4f,9a,10c	Spotlight
		90	62716	90PARHIR+3KFL25T	120	6	CC-8	5.31		3000	2.7	1900	2900	6200	$10.84	1a,2a,4f,9a,10c	Floodlight
		90	66285	90PARHIR+3KS10P2	120	3	CC-8	5.31		3000	2.7	1900	2900	26500	$10.84	1a,2a,4f,9a,10c	Spotlight, Twin Pack
		90	66286	90PARHIR+3KF25P2	120	3	CC-8	5.31		3000	2.7	1900	2900	6200	$10.84	1a,2a,4f,9a,10c	Floodlight, Twin Pack
HIR™ Plus(+) XL																	
PAR38	Med Skirt	53	76142	53PARHIR+XL/SP10	120	12	CC-8	5.31		7800	7.1	940	2700	15000	$6.38	1a,2a,4f,9a,10c	Spotlight, Long Life
		53	76143	53PARHIR+XL/FL25	120	12	CC-8	5.31		7800	7.1	940	2700	3700	$6.38	1a,2a,4f,9a,10c	Floodlight, Long Life
		75	67822	53PARHIR+XLS10P6	120	6	CC-8	5.31		8400	7.7	940	2700	15000	$6.38	1a,2a,4f,9a,10c	Spotlight, Long Life
		75	67823	53PARHIR+XLF25P6	120	6	CC-8	5.31		8400	7.7	940	2700	3700	$6.38	1a,2a,4f,9a,10c	Floodlight, Long Life
		75	68957	53PARHIR+8KF25T2	120	4	CC-8	5.31		8400	7.7	940	2700	3700	$6.38	1a,2a,4f,9a,10c	Floodlight, Long Life Twin Pack
		75	62231	75PARHIR+8KFL25T	120	6	CC-8	5.31		8400	7.7	1500	2750	5000	$9.03	1a,2a,4f,9a,10c	Floodlight, Long Life
		75	62232	75PARHIR+8KSP10T	120	6	CC-8	5.31		8400	7.7	1500	2750	22000	$9.03	1a,2a,4f,9a,10c	Spotlight, Long Life
		75	68956	75PARHIR+8KF25T2	120	4	CC-8	5.31		8400	7.7	1500	2750	5000	$9.03	1a,2a,4f,9a,10c	Floodlight, Long Life Twin Pack
Standard Halogen																	
PAR38	Med Skirt	38	69135	38PARH1500SP10	120	12	CC-8	5.31		1500	1.4	520	6600	2850	$4.58	1a,2a,4f,9a,10c	Spotlight
		38	69136	38PARH1500FL25	120	12	CC-8	5.31		1500	1.4	520	2000	2850	$4.58	1a,2a,4f,9a,10c	Floodlight
		38	60074	38PAR38H1500F25/P2	120	6	CC-8	5.31		1500	1.4	520	2000	2850	$4.58	1a,2a,4f,9a,10c	Floodlight, Twin Pack
		60	62703	60PARH1500SP10TP	120	6	CC-8	5.31		1500	1.4	1070	2900	17400	$7.23	1a,2a,4f,9a,10c	Spotlight
		60	62704	60PARH1500FL25TP	120	6	CC-8	5.31		1500	1.4	1070	2900	4050	$7.23	1a,2a,4f,9a,10c	Floodlight
		60	66279	60PARH1500S10/P2	120	3	CC-8	5.31		1500	1.4	1070	2900	17400	$7.23	1a,2a,4f,9a,10c	Spotlight, Twin Pack
		60	66280	60PARH1500F25/P2	120	3	CC-8	5.31		1500	1.4	1070	2900	4050	$7.23	1a,2a,4f,9a,10c	Floodlight, Twin Pack
		90	62705	90PARH1500SP10TP	120	6	CC-8	5.31		1500	1.4	1790	2900	26450	$10.84	1a,2a,4f,9a,10c	Spotlight
		90	62706	90PARH1500FL25TP	120	6	CC-8	5.31		1500	1.4	1790	2900	6850	$10.84	1a,2a,4f,9a,10c	Floodlight
		90	66281	90PARH1500S10/P2	120	3	CC-8	5.31		1500	1.4	1790	2900	26450	$10.84	1a,2a,4f,9a,10c	Spotlight, Twin Pack
		90	66282	90PARH1500F25/P2	120	3	CC-8	5.31		1500	1.4	1790	2900	6850	$10.84	1a,2a,4f,9a,10c	Floodlight, Twin Pack
Cool Beam PAR38 Quartzline®																	
PAR38	Med Skirt	250	23719	Q250PAR/SP10	120	12	CC-8	5.31		4200		3600	2880	40000		1a,2a,2j,4b,4f,4g,4h, 9a,10c	Spotlight
		250	23718	Q250PAR/FL30	120	12	CC-8	5.31		4200		3600	2880	9000		1a,2a,2j,4b,4f,4g,4h, 9a,10c	Floodlight

* Based on 3 hours per day use.
** Based on 3 hours per day use, $0.11 per Kwh

For the most up-to-date product information, see www.gelighting.com. To convert inches to millimeters, multiply by 25.4.
All warning and caution notices found at the end of this section (page 2-17).

Halogen Lamps

Bulb Shape	Base Type	Watts	Order Code	Description	Volts	Case Qty	Filament Type	MOL (in)	LCL (in)	Rated Life (hrs)	Rated Life (yrs*)	Initial Lumens	Initial Color Temp	CBCP	Annual Operating Costs**	Warning and Caution Notices	Additional Information
Halogen Compact PAR Lamps																	
Compact HIR™ PAR30																	
PAR30	Med	48	66580	48PAR30HIR+/NFL	120	6	CC-8	3.62		4200	3.8	840	2775	2600	$5.78	1a,2a,4f,4h,9a,10c	Narrow Floodlight, 25°
		48	76126	48PAR30/HIR+/FL30	120	6	CC-8	3.62		4200	3.8	840	2775	2600	$5.78	1a,2a,4f,4h,9a,10c	Floodlight
		48	76127	48PAR30/HIR+/SP10	120	6	CC-8	3.62		4200	3.8	840	2775	10200	$5.78	1a,2a,4f,4h,9a,10c	Spotlight
Compact HIR™ PAR30 Long Neck																	
PAR30L	Med	48	73546	48PAR30/L/HIR+/FL	120	6	CC-8	4.75		4200	3.8	850	2750	2500	$5.78	1a,2a,4f,4h,9a,10c	Floodlight
		48	74779	48PAR30/L/HIR+/SP	120	6	CC-8	4.75		4200	3.8	850	2750	9500	$5.78	1a,2a,4f,4h,9a,10c	Spotlight
Compact PAR30 Long Neck																	
PAR30L	Med	38	69168	38PAR30L/H/FL25	120	6	CC-8	4.75		1500	1.4	550	1500	2850	$4.58	1a,2a,4f,4h,9a,10c	Floodlight
		38	69169	38PAR30L/H/SP10	120	6	CC-8	4.75		1500	1.4	550	3800	2850	$4.58	1a,2a,4f,4h,9a,10c	Spotlight
Compact PAR30																	
PAR30	Med	38	69166	38PAR30H/FL25	120	6	CC-8	3.62		1500	1.4	580	1750	2850	$4.58	1a,2a,4f,4h,9a,10c	Floodlight
		38	69167	38PAR30H/SP10	120	6	CC-8	3.62		1500	1.4	580	5700	2850	$4.58	1a,2a,4f,4h,9a,10c	Spotlight
Compact PAR20																	
PAR20	Med	35	85476	35PAR20H/F25-PQ1/6	120	6	CC-8	3.13		1500	1.4	260	2700	520	$4.22	1a,2a,4f,4h,9a,10c	Floodlight
		35	71740	35PAR20H/YR-TP12	120	12	CC-8	3.13		1500	1.4	260	2700	520	$4.22	1a,2a,4f,4h,9a,10c	Floodlight
		38	69163	38PAR20H/FL25	120	6	CC-8	3.13		1500	1.4	490	1450	2850	$4.58	1a,2a,4f,4h,9a,10c	Floodlight
		38	69164	38PAR20H/SP10	120	6	CC-8	3.13		1500	1.4	490	3800	2850	$4.58	1a,2a,4f,4h,9a,10c	Spotlight
		38	69165	38PAR20H/FL25/P2	120	3	CC-8	3.13		3000	1.4	490	1450	2850	$4.58	1a,2a,4f,4h,9a,10c	Floodlight, Twin Pack
		38	69148	38PAR20HIR+/FL30	120	6	CC-8	3.13		3000	1.4	530	1300	2750	$4.58	1a,2a,4f,4h,9a,10c	HIR+, Floodlight
		38	69149	38PAR20HIR+/SP15	120	6	CC-8	3.13		3000	1.4	530	2600	2750	$4.58	1a,2a,4f,4h,9a,10c	HIR+, Spotlight
Halogen Compact PAR16																	
JDR16	Med	35	20641	35PAR16CURIO	120	3	CC-6V	2.05		3000	2.7		2700	500		1a,2a,2b,2e,4f,4i,4h,7a, 9a,10b,10c	Curio cabinet
PAR16		60	41623	60PAR16/H/FL30	120	6	CC-8	2.88		2000	1.8	650	2950	1550		1a,2a,4f,4h,9a,10c	Floodlight
		60	82142	60PAR16FL/RVL-CD	120	6	CC-8	2.88		2000	1.8	485	2850			1a,2a,4f,4h,9a,10c	Reveal®, Floodlight, Carded
		75	41629	75PAR16/H/FL30	120	6	CC-8	2.88		2000	1.8	900	2950	1600		1a,2a,4f,4h,9a,10c	Floodlight
Compact PAR36																	
PAR36	Scrw Term	35	19873	35PAR36/H/SP5	12	12	C-6	2.75		4000		250	3050	25000		2a,2b,4f,4g,7a,9b,10c	Spotlight
			19876	35PAR36/H/SP8	12	12	C-6	2.75		4000		250	3050	8000		2a,2b,4f,4g,7a,9b,10c	Spotlight
			19877	35PAR36/H/FL30	12	12	C-6	2.75		4000		250	3050	900		2a,2b,4f,4g,7a,9b,10c	Floodlight
			42072	35PAR36/H/VWFL	12	12	C-6	2.75		4000		250	3050			2a,2b,4f,4g,7a,9b,10c	Wide Flood
		50	19878	50PAR36/H/SP5	12	12	C-6	2.75		4000		400	3050	39000		2a,2b,4f,4g,7a,9b,10c	Spotlight
			19879	50PAR36/H/SP8	12	12	C-6	2.75		4000		400	3050	10000		2a,2b,4f,4g,7a,9b,10c	Spotlight
			19880	50PAR36/H/FL30	12	12	C-6	2.75		4000		400	3050	1300		2a,2b,4f,4g,7a,9b,10c	Floodlight
Halogen Reflector																	
HIR™																	
R20	Med	45	74204	45R20/H/HIR-TP6	120	6	CC-8	3.54		3000	2.7	490	2750		$5.42	—	Halogen Reflector
BR30	Med	45	74206	45BR30/H/HIR-TP6	120	6	CC-8	5.37		3000	2.7	640	2750		$5.42	1a,1b, 2a, 2b, 2e, 4i, 7a	Halogen Reflector
BR40	Med	45	74207	45BR40/H/HIR-TP6	120	6	CC-8	6.56		3000	2.7	740	2750		$5.42	1a,1b, 2a, 2b, 2e, 4i, 7a	Halogen Reflector
BR30	Med	65	75414	65BR30/H/RVL-TP	120	6	CC-8	5.37		3000	2.7	485	2750		$7.83	1a,1b, 2a, 2b, 2e, 4i, 7a	Halogen Reflector
BR40	Med	65	77757	65BR40/H/HIR-TP6	120	6	CC-8	6.56		3000	2.7	1100	2800		$7.83	1a,1b, 2a, 2b, 2e, 4i, 7a	Halogen Reflector
A-Line/Decorative																	
A-19																	
A19	Med	29	78795	29A/CL/H-2PK	120	6	CC-8	4.43		1000	0.9	430	2850		$3.49	1a,2a,2b,2c,2e,4i, 4j,9a,10b,10c	Clear, Halogen, 2-Pack
		29	62607	29A/CL/RVL/H-2PK	120	6	CC-8	4.43		1000	0.9	325	2850		$3.49	1a,2a,2b,2c,2e,4i, 4j,9a,10b,10c	Clear Reveal®, Halogen, 2-Pack
		29	63002	29A/W/H-2PK	120	6	CC-8	4.43		1000	0.9	430	2850		$3.49	1a,2a,2b,2c,2e,4i, 4j,9a,10b,10c	Soft White, Halogen, 2-Pack
		29	66246	29A/W/H-4/12PK	120	12	CC-8	4.43		1000	0.9	430	2850		$3.49	1a,2a,2b,2c,2e,4i, 4j,9a,10b,10c	Soft White, Halogen, 4-Pack
		29	63006	29A/W/RVL/H-2PK	120	6	CC-8	4.43		1000	0.9	325	2850		$3.49	1a,2a,2b,2c,2e,4i, 4j,9a,10b,10c	Reveal®, Halogen, 2-Pack
		29	60285	29A/W/2X/H/4PK	120	12	CC-8	4.43		2000	1.8	390	2800		$3.49	1a,2a,2b,2c,2e,4i, 4j,9a,10b,10c	Modified Spectrum Soft White, Halogen, 4-Pack
		43	78796	43A/CL/H-2PK	120	6	CC-8	4.43		1000	0.9	750	2900		$5.18	1a,2a,2b,2c,2e,4i, 4j,9a,10b,10c	Clear, Halogen, 2-Pack
		43	62616	43A/CL/RVL/H-2PK	120	6	CC-8	4.43		1000	0.9	565	2900		$5.18	1a,2a,2b,2c,2e,4i, 4j,9a,10b,10c	Clear Reveal®, Halogen, 2-Pack
		43	63003	43A/W/H-2PK	120	6	CC-8	4.43		1000	0.9	620	2900		$5.18	1a,2a,2b,2c,2e,4i, 4j,9a,10b,10c	Soft White, Halogen, 2-Pack

* Based on 3 hours per day use.
** Based on 3 hours per day use, $0.11 per Kwh

For the most up-to-date product information, see www.gelighting.com. To convert inches to millimeters, multiply by 25.4.
All warning and caution notices found at the end of this section (page 2-17).

Bulb Shape	Base Type	Watts	Order Code	Description	Volts	Case Qty	Filament Type	MOL (in)	LCL (in)	Rated Life (hrs)	Rated Life (yrs*)	Initial Lumens	Initial Color Temp	CBCP	Annual Operating Costs**	Warning and Caution Notices	Additional Information
A-Line/Decorative (continued)																	
A-19 (continued)																	
A19	Med	43	66247	43A/W/H-4/12PK	120	12	CC-8	4.43		1000	0.9	620	2900		$5.18	1a,2a,2b,2c,2e,4i, 4j,9a,10b,10c	Soft White, Halogen, 4-Pack
		43	63007	43A/W/RVL/H-2PK	120	6	CC-8	4.43		1000	0.9	565	2900		$5.18	1a,2a,2b,2c,2e,4i, 4j,9a,10b,10c	Reveal®, Halogen, 2-Pack
		43	60071	43A/W/2X/H/4PK	120	12	CC-8	4.43		2000	1.8	620	2750		$5.18	1a,2a,2b,2c,2e,4i, 4j,9a,10b,10c	Modified Spectrum Soft White, Halogen, 4-Pack
		53	78797	53A/CL/H-2PK	120	6	CC-8	4.43		1000	0.9	1050	2950		$6.38	1a,2a,2b,2c,2e,4i, 4j,9a,10b,10c	Clear, Halogen, 2-Pack
		53	62617	53A/CL/RVL/H-2PK	120	6	CC-8	4.43		1000	0.9	790	2950		$6.38	1a,2a,2b,2c,2e,4i, 4j,9a,10b,10c	Clear Reveal®, Halogen, 2-Pack
		53	63004	53A/W/H-2PK	120	6	CC-8	4.43		1000	0.9	1050	2950		$6.38	1a,2a,2b,2c,2e,4i, 4j,9a,10b,10c	Soft White, Halogen, 2-Pack
		53	66248	53A/W/H-4/12PK	120	12	CC-8	4.43		1000	0.9	890	2950		$6.38	1a,2a,2b,2c,2e,4i, 4j,9a,10b,10c	Soft White, Halogen, 4-Pack
		53	63008	53A/W/RVL/H-2PK	120	6	CC-8	4.43		1000	0.9	790	3000		$6.38	1a,2a,2b,2c,2e,4i, 4j,9a,10b,10c	Reveal®, Halogen, 2-Pack
		53	60070	53A/W/2X/H/4PK	120	12	CC-8	4.43		2000	1.8	850	2750		$6.38	1a,2a,2b,2c,2e,4i, 4j,9a,10b,10c	Modified Spectrum Soft White, Halogen, 4-Pack
		72	78798	72A/CL/H-2PK	120	6	CC-8	4.43		1000	0.9	1490	3000		$8.67	1a,2a,2b,2c,2e,4i, 4j,9a,10b,10c	Clear, Halogen, 2-Pack
		72	62618	72A/CL/RVL/H-2PK	120	6	CC-8	4.43		1000	0.9	1120	3000		$8.67	1a,2a,2b,2c,2e,4i, 4j,9a,10b,10c	Clear Reveal, Halogen, 2-Pack
		72	63005	72A/W/H-2PK	120	6	CC-8	4.43		1000	0.9	1270	3000		$8.67	1a,2a,2b,2c,2e,4i, 4j,9a,10b,10c	Soft White, Halogen, 2-Pack
		72	66249	72A/W/H-4/12PK	120	12	CC-8	4.43		1000	0.9	1270	3000		$8.67	1a,2a,2b,2c,2e,4i, 4j,9a,10b,10c	Soft White, Halogen, 4-Pack
		72	63009	72A/W/RVL/H-2PK	120	6	CC-8	4.43		1000	0.9	1120	3000		$8.67	1a,2a,2b,2c,2e,4i, 4j,9a,10b,10c	Reveal®, Halogen, 2-Pack
		72	60035	72A/W/2X/H/4PK	120	12	CC-8	4.43		2000	1.8	1270	2800		$8.67	1a,2a,2b,2c,2e,4i, 4j,9a,10b,10c	Modified Spectrum Soft White, Halogen, 4-Pack
A-21																	
A21	3C Med	30/70/100	24699	30/100-HALOGEN	120	6	CC-8	5.25		2500	2.3	300/1050/ 1370	2900		$12.05	1a,2a,2b,2c,4i,4j, 9a,10b,10c	3-Way
		50/100/150	81590	50/150-HALOGEN	120	6	CC-8	5.25		2500	2.3	700/1600/ 2300	2900		$18.07	1a,2a,2b,2c,4i,4j, 9a,10b,10c	3-Way
		50/100/150	71367	50/150/H/RVL-TP6	120	6	CC-8	5.25		2500	2.3	560/1280/ 1840	2850		$18.07	1a,2a,2b,2c,4i,4j, 9a,10b,10c	Reveal®, 3-Way
	Med	150	71364	150A/W/RL/HAL-TP6	120	6	CC-8	5.25		2000	1.8	2650	2900		$18.07	1a,2a,2b,2c,4i,4j, 9a,10b,10c	Reader
Traditional Decorative																	
B10	Cand	25	16764	25BC/H/CD2	120	5	CC-8	3.94	2.22	2250	2.1	280	2700		$3.01	1a,1b,2a,2b,2e,4i, 4j,9a,10b,10c	Carded Twin Pack, Chandelier
	Med	25	16760	25BM/H/CD2	120	5	CC-8	3.94	2.22	2250	2.1	260	2600		$3.01	1a,1b,2a,2b,2e,4i, 4j,9a, 10b,10c	Carded Twin Pack
	Med	29	60269	29BM/H/CD2	120	3	CC-8	3.94		1000	0.9	430	2850		$3.49	1a,1b,2a,2b,2e,4i, 4j,9a, 10b,10c	Carded Twin Pack
	Cand	40	16765	40BC/H/CD2	120	5	CC-8	3.94	2.22	2250	2.1	485	2700		$4.82	1a,1b,2a,2b,2e,4i, 4j,9a, 10b,10c	Carded Twin Pack, Chandelier
	Med	40	16761	40BM/H/CD2	120	5	CC-8	3.94	2.22	2250	2.1	485	2700		$4.82	1a,1b,2a,2b,2e,4i, 4j,9a, 10b,10c	Carded Twin Pack
	Med	43	60271	43BM/H/CD2	120	3	CC-8	3.94		1000	0.9	750	2900		$5.18	1a,1b,2a,2b,2e,4i, 4j,9a, 10b,10c	Carded Twin Pack
CA9	Med	29	60273	29CAM/H/CD2	120	3	CC-8	4.56		1000	0.9	430	2850		$3.49	1a,1b,2a,2b,2e,4i, 4j,9a, 10b,10c	Carded Twin Pack
CA9	Med	43	60276	43CAM/H/CD2	120	3	CC-8	4.56		1000	0.9	750	2900		$5.18	1a,1b,2a,2b,2e,4i, 4j,9a, 10b,10c	Carded Twin Pack
Flame																	
F15	Med	25	16766	25BFM/H/CD2	120	5	CC-8	3.94	2.22	2250	2.1	280	2600		$3.01	1a,1b,2a,2b,2e,4i, 4j,9a, 10b,10c	Carded Twin Pack
		40	16767	40BFM/H/CD2	120	5	CC-8	3.94	2.22	2250	2.1	350	2500		$4.82	1a,1b,2a,2b,2e,4i, 4j,9a, 10b,10c	Carded Twin Pack

* Based on 3 hours per day use.
** Based on 3 hours per day use, $0.11 per Kwh

For the most up-to-date product information, see www.gelighting.com. To convert inches to millimeters, multiply by 25.4.
All warning and caution notices found at the end of this section (page 2-17).

Halogen Lamps

Bulb Shape	Base Type	Watts	Order Code	Description	Volts	Case Qty	Filament Type	MOL (in)	LCL (in)	Rated Life (hrs)	Rated Life (yrs*)	Initial Lumens	Initial Color Temp	CBCP	Annual Operating Costs**	Warning and Caution Notices	Additional Information
A-Line/Decorative (continued)																	
Globe																	
G16.5	Cand	40	82131	40GC/CL/H-PQ2/3	120	6	CC-8	3		2250	2.1	415	2500		$4.82	1a,1b,2a,2b,2e,4i,4j, 7a,10b,10c	Clear, Halogen Globe
		60	82132	60GC/CL/H-PQ2/3	120	6	CC-8	3		2250	2.1	600	2500		$7.23	1a,1b,2a,2b,2e,4i,4j, 7a,10b,10c	Clear, Halogen Globe
G16.5	Med	40	82133	40GM/CL/H-PQ2/3	120	6	CC-8	3		2250	2.1	415	2700		$4.82	1a,1b,2a,2b,2e,4i,4j, 7a,10b,10c	Clear, Halogen Globe
		60	82134	60GM/CL/H-PQ2/3	120	6	CC-8	3		2250	2.1	650	2850		$7.23	1a,1b,2a,2b,2e,4i,4j, 7a,10b,10c	Clear, Halogen Globe
G25	Med	29	60100	29G25/H/CL	120	3	CC-8	4.45		1000	0.9	430	2850		$3.49	1a,1b,2a,2b,2e,4i,4j,9c, 10b,10c	Halogen, Clear Globe
			60199	29G25/H/W	120	3	CC-8	4.45		1000	0.9	430	2850		$3.49	1a,1b,2a,2b,2e,4i,4j,9c, 10b,10c	Halogen, White Globe
		40	82140	40G25/CL/H/RVL	120	6	CC-8	4.50	2.60	2250	2.1	470	2550		$4.82	1a,1b,2a,2b,2e,4i, 4j,9c, 10b,10c	Halogen, Clear Globe
			16774	40G25/H/CRYSTAL	120	6	CC-8	4.45	2.60	2250	2.1	520	2700		$4.82	1a,1b,2a,2b,2e,4i, 4j,9c, 10b,10c	Crystal Clear Globe
			71373	40G25H/CRY/RV-TP	120	6	CC-8	4.45	2.56	2250	2.1	390	2550		$4.82	1a,1b,2a,2b,2e,4i, 4j,7a,9c,10b,10c	Reveal®, Crystal Globe
		43	60076	43G25/H/CL	120	3	CC-8	4.45		1000	0.9	750	2900		$5.18	1a,1b,2a,2b,2e,4i, 4j,9c, 10b,10c	Halogen, Clear Globe
			60109	43G25/H/W	120	3	CC-8	4.45		1000	0.9	750	2900		$5.18	1a,1b,2a,2b,2e,4i, 4j,9c, 10b,10c	Halogen, White Globe
		60	82141	60G25/CL/H/RVL	120	6	CC-8	4.50	2.60	2250	2.1	675	2850		$7.23	1a,1b,2a,2b,2e,4i, 4j,9c, 10b,10c	Reveal®, Halogen Globe
T-Shape																	
T10	Med	40	16777	40T10/H/CD	120	4	CC-8	5.04	2.56	2250	2.1	520	2700		$4.82	1a,1b,2a,2b,2e,4i, 4j,9c, 10b,10c	Carded
		60	16778	60T10/H/CD	120	4	CC-8	5.04	2.56	2250	2.1	900	2900		$7.23	1a,1b,2a,2b,2e,4i, 4j,9c, 10b,10c	Carded
Landscape Lighting																	
MR16	2-Pin GX5-3	20	71485	Q20MR16/LAND-CD	12	3	C-6	1.88		2000		275	2900	450	$2.41		Outdoor Floodlight
T3	2-Pin G4	20	71495	Q20T3/LAND-CD2	12	25	C-8	1.25	0.75	2000		350	2750		$2.41		Outdoor
	2-Pin GY6.35	50	71496	Q50T3/LAND-CD2	12	25	C-8	1.75	1.13	3000		900	2950		$6.02		Outdoor
AR70																	
AR70	DCBay Ba15d	50	72255	50AR70/SP8	12	10	C-8	2.64		3000			2800	12500		2e,4a,4e,4f,9a,9d, 10b,10c	Spotlight
AR111																	
AR111	G53	35	72253	35AR111/SP4	12	10	C-8	2.64		3000			2800	22000		2a,4a,4e,4f,9a,9d, 10b,10c	Narrow Spotlight
		35	97532	35AR111/SP8	12	10	C-8	2.64		3000			2800	14000		2a,2j,4a,4e,4f,9a, 9d,10b,10c	Spotlight
		35	97533	35AR111/FL24	12	10	C-8	2.64		3000			2800	2500		2a,2j,4a,4e,4f,9a, 9d,10b,10c	Narrow Floodlight
		50	72254	50AR111/SP4	12	10	C-8	2.64		3000			2850	25000		2a,4a,4e,4f,9a,9d, 10b,10c	Narrow Spotlight
		50	97534	50AR111/SP8	12	10	C-8	2.64		3000			2800	17800		2a,2j,4a,4e,4f,9a, 9d,10b,10c	Spotlight
		50	97535	50AR111/FL24	12	10	C-8	2.64		3000			2800	3500		2a,2j,4a,4e,4f,9a, 9d,10b,10c	Narrow Floodlight
		75	97536	75AR111/SP8	12	10	C-8	2.64		3000			2900	23500		2a,2j,4a,4e,4f,9a, 9d,10b,10c	Spotlight
		75	97537	75AR111/FL24	12	10	C-8	2.64		3000			2900	5300		2a,2j,4a,4e,4f,9a, 9d,10b,10c	Narrow Floodlight
		75	97538	75AR111/FL45	12	10	C-8	2.64		3000			2900	1700		2a,2j,4a,4e,4f,9a, 9d,10b,10c	Wide Floodlight
MR																	
Turn & Lock ConstantColor®																	
MR16	TAL GU7	35	81282	35MR16/6/TL-AX	12	10	C-8	1.88		3500		475	3200	8500			
		35	78816	35MR16/Q/8/TL-AX	12	10	C-8	2.00		3500			2900			2a,2b,4f,7a,9a,10b,10c	Narrow Spot
		50	30901	50MR16/Q/10/TL	12	10	C-6	2.00		3500			3000	10800		2a,2b,4f,7a,9a,10b,10c	Narrow Spot
		50	30900	50MR16/Q/20/TL	12	10	C-6	2.00		3500			3000	3330		2a,2b,4f,7a,9a,10b,10c	Narrow Flood
		50	30899	50MR16/Q/40/TL	12	10	C-6	2.00		3500			3000	1395		2a,2b,4f,7a,9a,10b,10c	Floodlight

* Based on 3 hours per day use.
** Based on 3 hours per day use, $0.11 per Kwh

For the most up-to-date product information, see www.gelighting.com. To convert inches to millimeters, multiply by 25.4.
All warning and caution notices found at the end of this section (page 2-17).

MR (continued)

Bulb Shape	Base Type	Watts	Order Code	Description	Volts	Case Qty	Filament Type	MOL (in)	LCL (in)	Rated Life (hrs)	Rated Life (yrs*)	Initial Lumens	Initial Color Temp	CBCP	Annual Operating Costs**	Warning and Caution Notices	Additional Information
ConstantColor® Precise™ Cover Glass MR16																	
MR16	2-Pin GU5.3	20	20858	Q20MR16C/CG15ESX	12	20	C-6	1.88		5000	4.6	225	2900	3150		2a,2b,4f,9a,10c	Narrow Spot, ANSI: ESX
		20	20857	Q20MR16C/CG40BAB	12	20	C-6	1.88		5000	4.6	225	2900	475	$2.41	2a,2b,4f,9a,10c	Flood. ANSI: BAB
		20	21456	FAM6Q20MR16NSCCG	12	1	C-6	1.88		5000	4.6		2900	3350	$2.41	2a,2b,4f,9a,10c	Narrow Spot, Carded, ANSI: ESX
		20	21455	FAM6Q20MR16FLCCG	12	1	C-6	1.88		5000	4.6		2900	490	$2.41	2a,2b,4f,9a,10c	Flood, Carded, ANSI: BAB
		35	20864	Q35MR16/C/CG12	12	20	C-6	1.88		5000			3000	7500		2a,2b,4f,9a,10c	Narrow Spot, ANSI: FRB
		35	20860	Q35MR16C/CG20	12	20	C-6	1.88		5000	4.6	520	3000	3200	$4.22	2a,2b,4f,9a,10c	Spot, ANSI: FRA
		35	20859	Q35MR16C/CG40	12	20	C-6	1.88		5000	4.6	520	3000	900	$4.22	2a,2b,4f,9a,10c	Flood. ANSI: FMW
		35	41487	Q35MR16/CCG40	24	20	CC-6	1.88		4000			2950	920		2a,2b,4f,9a,10c	Floodlight
		50	20872	Q50MR16C/CG15	12	20	C-6	1.88		6000			3050	8400		2a,2b,4f,9a,10c	Narrow Spot, ANSI: EXT
		50	20871	Q50MR16C/CG25	12	20	C-6	1.88		6000			3050	2900		2a,2b,4f,9a,10c	Narrow Spot, ANSI: EXZ
		50	20867	Q50MR16C/CG40	12	20	C-6	1.88		6000			3050	1500		2a,2b,4f,9a,10c	Flood, ANSI: EXN
		50	20865	Q50MR16C/CG55	12	20	C-6	1.88		6000	5.5	775	3050	850	$6.02	2a,2b,4f,9a,10c	Wide Flood, ANSI: FNV
		50	41488	Q50MR16/C/CG15	24	20	CC-6	1.88		2000	1.8	575	2950	8400	$6.02	2a,2b,4f,9a,10c	Narrow Spot
		50	41489	Q50MR16/C/CG40	24	20	CC-6	1.88		2000	1.8	615	2950	1570	$6.02	2a,2b,4f,9a,10c	Floodlight
		50	21458	FAM6Q50MR16NSCCG	12	1	C-6	1.88		6000			3050	9500		2a,2b,4f,9a,10c	Narrow Spot. Carded, ANSI: EXT
		50	21457	FAM6Q50MR16FLCCG	12	1	C-6	1.88		6000			3050	1720		2a,2b,4f,9a,10c	Flood. 3050K. Carded, ANSI: EXN
		71	20876	Q71MR16C/CG15	12	20	C-6	1.88		4000			3050	10800		2a,2b,4f,9a,10c	Narrow Spot, ANSI: EYF
		71	20874	Q71MR16/C/CG25	12	20	C-6	1.88		4000			3050	4550		2a,2b,4f,9a,10c	Narrow Spot, ANSI: EYJ
		71	20873	Q71MR16/C/CG40	12	20	C-6	1.88		4000			3050	2000		2a,2b,4f,9a,10c	Flood, ANSI: EYC
ConstantColor® Precise™ MR16																	
MR16	2-Pin GX5.3	20	20816	Q20MR16/C/VNSP7	12	20	CC-6	1.88		3000			2900	7400		2a,2j,4a,4c,4e,4f,9a, 9d, 10b,10c	Very Narrow Spot, ANSI: EZX
		20	20815	Q20MR16/C/NSP15	12	20	C-6	1.88		5000			2900	3750		2a,2j,4a,4c,4e,4f,9a, 9d, 10b,10c	Narrow Spot, ANSI:ESX
		20	20814	Q20MR16C/FL40	12	20	C-6	1.88		5000	4.6	240	2900	525	$2.41	2a,2j,4a,4c,4e,4f,9a, 9d, 10b,10c	Flood. ANSI: BAB
		35	20826	Q35MR16/C/SP20	12	20	C-6	1.88		5000	4.6	520	3000	3900	$4.22	2a,2j,4a,4c,4e,4f,9a, 9d, 10b,10c	Spot, ANSI: FRA
		35	20825	Q35MR16/C/FL40	12	20	C-6	1.88		5000	4.6	520	3000	1000	$4.22	2a,2j,4a,4c,4e,4f,9a, 9d, 10b,10c	Flood. ANSI: FMW
		42	20830	Q42MR16/C/VNSP9	12	20	CC-6	1.88		3500			3000	12300		2a,2j,4a,4c,4e,4f,9a, 9d, 10b,10c	Very Narrow Spot, ANSI: EZY
		50	20839	Q50MR16/C/NSP15	12	20	C-6	1.88		6000	5.5	750	3050	9100	$6.02	2a,2j,4a,4c,4e,4f,9a, 9d, 10b,10c	Narrow Spot, ANSI: EXT
		50	20835	Q50MR16/C/NFL25	12	20	C-6	1.88		6000	5.5	800	3050	3200	$6.02	2a,2j,4a,4c,4e,4f,9a, 9d, 10b,10c	Narrow Flood, ANSI: EXZ
		50	20834	Q50MR16C/NFL30	12	20	C-6	1.88		6000	5.5	850	3050	2500	$6.02	2a,2j,4a,4c,4e,4f,9a, 9d, 10b,10c	Narrow Flood, ANSI: EXK
		50	20833	Q50MR16/C/FL40	12	20	C-6	1.88		6000	5.5	800	3050	1700	$6.02	2a,2j,4a,4c,4e,4f,9a, 9d, 10b,10c	Flood. ANSI: EXN
		50	20832	Q50MR16/C/WFL55	12	20	C-6	1.88		6000	5.5	825	3050	900	$6.02	2a,2j,4a,4c,4e,4f,9a, 9d, 10b,10c	Wide Flood, ANSI: FNV
		71	20843	Q71MR16/C/NSP15	12	20	C-6	1.88		4000	3.7	1125	3050	11500	$8.55	2a,2j,4a,4c,4e,4f,9a, 9d, 10b,10c	Narrow Spot, ANSI: EYF
		71	20841	Q71MR16/C/NFL25	12	20	C-6	1.88		4000	3.7	1175	3050	5500	$8.55	2a,2j,4a,4c,4e,4f,9a, 9d, 10b,10c	Narrow Flood, ANSI: EYJ
		71	20840	Q71MR16/C/FL40	12	20	C-6	1.88		4000	3.7	1200	3050	2200	$8.55	2a,2j,4a,4c,4e,4f,9a, 9d, 10b,10c	Flood. ANSI: EYC
Precise™ Cover Glass IR MR16																	
MR16	2-Pin GU5.3	20	77900	Q20MR16HIR/CCG10	12	20	C-8	1.77		5000			2900	6000		2a,2b,4f,9a,10c	Narrow Spot
		20	77901	Q20MR16HIR/CCG24	12	20	C-8	1.77		5000			2900	2300		2a,2b,4f,9a,10c	Narrow Flood
		20	77902	Q20MR16HIR/CCG35	12	20	C-8	1.77		5000			2900	1000		2a,2b,4f,9a,10c	Flood
		35	77904	Q35MR16HIR/CCG10	12	20	C-8	1.77		5000			2950	12000		2a,2b,4f,9a,10c	Narrow Spot
		35	77905	Q35MR16HIR/CCG24	12	20	C-8	1.77		5000			2950	4200		2a,2b,4f,9a,10c	Narrow Flood
		35	77906	Q35MR16HIR/CCG35	12	20	C-8	1.77		5000			2950	2000		2a,2b,4f,9a,10c	Flood
		35	79233	Q35MR16HIR/CCG55	12	20	C-8	1.77		5000			2950	1000		2a,2b,4f,9a,10c	Wide Flood
		45	77907	Q45MR16HIR/CCG10	12	20	C-8	1.77		5000			3000	14000		2a,2b,4f,9a,10c	Narrow Spot
		45	77908	Q45MR16HIR/CCG24	12	20	C-8	1.77		5000			3000	5200		2a,2b,4f,9a,10c	Narrow Flood
MR16	2-Pin GX5.3	45	77909	Q45MR16HIR/CCG35	12	20	C-8	1.77		5000			3000	2300		2a,2b,4f,9a,10c	Flood

* Based on 3 hours per day use.
** Based on 3 hours per day use, $0.11 per Kwh

For the most up-to-date product information, see www.gelighting.com. To convert inches to millimeters, multiply by 25.4.
All warning and caution notices found at the end of this section (page 2-17).

Bulb Shape	Base Type	Watts	Order Code	Description	Volts	Case Qty	Filament Type	MOL (in)	LCL (in)	Rated Life (hrs)	Rated Life (yrs*)	Initial Lumens	Initial Color Temp	CBCP	Annual Operating Costs**	Warning and Caution Notices	Additional Information
MR (continued)																	
Standard MR16																	
MR16	2-Pin GX5.3	20	25481	Q20MR16/SP	12	20	C-6	1.88		2000	1.8	275	2900	3500	$2.41	2a,2j,4a,4c,4e,4f,9a, 9d, 10b,10c	Spot, ANSI: ESX
		20	25480	Q20MR16/FL	12	20	C-6	1.88		2000	1.8	275	2900	500	$2.41	2a,2j,4a,4c,4e,4f,9a, 9d, 10b,10c	Flood, ANSI: BAB
		20	85290	Q20MR16/SP-PQ3/6	12	6	C-6	1.88		2000	1.8	290	2900	3500	$2.41	2a,2j,4a,4c,4e,4f,9a, 9d, 10b,10c	Spotlight, ANSI: ESX
		20	85289	Q20MR16/FL-PQ3/6	12	6	C-6	1.88		2000	1.8	290	2900	500	$2.41	2a,2j,4a,4c,4e,4f,9a, 9d, 10b,10c	Floodlight ANSI: BAB
		50	25483	Q50MR16/SP	12	20	C-6	1.88		2000	1.8	890	2900	9500	$6.02	2a,2j,4a,4c,4e,4f,9a, 9d, 10b,10c	Spot, ANSI: EXT
		50	25482	Q50MR16/FL	12	20	C-6	1.88		2000	1.8	890	2900	1500	$6.02	2a,2j,4a,4c,4e,4f,9a, 9d, 10b,10c	Flood, ANSI: EXN
		50	85296	Q50MR16/FL-PQ3/6	12	6	C-6	1.88		2000	1.8	890	2900	9500	$6.02	2a,2j,4a,4c,4e,4f,9a, 9d, 10b,10c	Flood, ANSI: EXN
		50	85297	Q50MR16/SP-PQ3/6	12	6	C-6	1.88		2000	1.8	890	2900	1500	$6.02	2a,2j,4a,4c,4e,4f,9a, 9d, 10b,10c	Spot, ANSI: EXT
Standard MR16 Cover Glass																	
MR16	2-Pin GX5.3	20	81763	Q20MR16CGFLCD-BA	12	6	C-6	1.88		2000	1.8	275	2900	450	$2.41	2a,2j,4a,4c,4e,4f,9a, 9d, 10b,10c	Flood, Basic
		20	81765	Q20MR16CGSPCD-BA	12	6	C-6	1.88		2000	1.8	275	2900	3150	$2.41	2a,2j,4a,4c,4e,4f,9a, 9d, 10b,10c	Spot, Basic
		35	81768	Q35MR16CGFLCD-BA	12	6	C-6	1.88		2000	1.8	540	2900	840	$4.22	2a,2j,4a,4c,4e,4f,9a, 9d, 10b,10c	Flood, Basic
		50	81770	Q50MR16CGFLCD-BA	12	6	C-6	1.88		2000	1.8	850	2900	1350	$6.02	2a,2j,4a,4c,4e,4f,9a, 9d, 10b,10c	Flood, Basic
		50	81771	Q50MR16CGSPCD-BA	12	6	C-6	1.88		2000	1.8	850	2900	8550	$6.02	2a,2j,4a,4c,4e,4f,9a, 9d, 10b,10c	Spot, Basic
MR16	2-Pin GX5.3	50	82110	Q50MR16FCCGRV-CD	12	6	C-6	1.88		3000	2.7	650	2950	1750	$6.02	2a,2j,4a,4c,4e,4f,9a, 9d, 10b,10c	Reveal®, Floodlight, Carded
		50	82111	Q50MR16SCCGRV-CD	12	6	C-6	1.88		3000	2.7	650	2950	9000	$6.02	2a,2j,4a,4c,4e,4f,9a, 9d, 10b,10c	Reveal®, Spotlight, Carded
Standard MR11																	
MR11	2-Pin G4	20	30773	Q20MR11/NFL30	12	10	C-6	1.38		3500			2900	600		2a,2b,4c,4e,4f,9a, 9d, 10b,10c,11a	Narrow Flood, ANSI: FTD
		20	25197	FAM6Q20MR11NF/CD	12	1	C-6	1.38		3500			2900	600		2a,2b,4c,4e,4f,9a,9d, 10b,10c,11a	Narrow Flood, ANSI: FTD
		35	30774	Q35MR11SP20(FTF)	12	10	C-6	1.38		3500			2900	3000		2a,2b,4c,4e,4f,9a, 9d, 10b,10c,11a	Spot, ANSI: FTF
		35	30890	Q35MR11NFL30(FTH	12	10	C-6	1.38		3500			2900	1300		2a,2b,4c,4e,4f,9a, 9d, 10b,10c,11a	Narrow Flood, ANSI: FTH
		35	41483	Q35MR11/CG12 24	24	50	C-6	1.38		2000			2950	4100		2a,2b,4c,4f,9a,10c	Spot
120V GU10																	
MR16	GU10	20	16753	Q20GU10/FL/CD	120	5	CC-2V	2.13		2000	1.8	80	2600	230	$2.41	1a,2a,2b,2e,4f,4i, 9a,10b,10c	Flood Carded
		35	16752	Q35GU10/FL/CD	120	5	CC-2V	2.13		3000	2.7	200	2650	500	$4.22	1a,2a,2b,2e,4f,4i, 9a,10b,10c	Flood Carded
		50	16751	Q50GU10/FL/CD	120	5	CC-2V	2.13		3000	2.7	400	2750	1000	$6.02	1a,2a,2b,2e,4f,4i, 9a,10b,10c	Flood Carded
		50	82143	Q50GU10FL/RVL-CD	120	6	CC-2V	2.13		3000	2.7	400	2750	400	$6.02	1a,2a,2b,2e,4f,4i, 9a,10b,10c	Reveal®, Floodlight, Carded
Quartz Halogen																	
Low Voltage																	
T3	2-Pin G4	5	42959	Q5T3/CL	12	100	C-6	1.25 cm	0.75	2000	1.8	60			$0.60	2a,2j,4c,4e,4f,9a, 9d,10b,10c	Clear
		10	34674	Q10T3/CL	12	100	C-6	1.25 cm	0.75	2000	1.8	140			$1.20		Clear
		10	97668	Q10T3/CL/SCD-5PK	12	100	C-6	1.25 cm	0.75	2000	1.8	140			$1.20	2a,2j,4c,4e,4f,9a, 9d,10b,10c	Display lights, Small Card
		20	34715	Q20T2.5/12V/CL	12	100	C-6	1.25 cm	0.75	2000	1.8	350			$2.41		Clear, 12V
		20	97669	Q20T3/CL/SCD-5PK	12	25	C-6	1.25 cm	0.75	2000	1.8	350			$2.41	2a,2j,4c,4e,4f,9a, 9d,10b,10c	Display lights, Small Card

* Based on 3 hours per day use.
** Based on 3 hours per day use, $0.11 per Kwh

For the most up-to-date product information, see www.gelighting.com. To convert inches to millimeters, multiply by 25.4.
All warning and caution notices found at the end of this section (page 2-17).

Bulb Shape	Base Type	Watts	Order Code	Description	Volts	Case Qty	Filament Type	MOL (in)	LCL (in)	Rated Life (hrs)	Rated Life (yrs*)	Initial Lumens	Initial Color Temp	CBCP	Annual Operating Costs**	Warning and Caution Notices	Additional Information
Quartz Halogen (continued)																	
Low Voltage (continued)																	
T3	2-Pin GY6.35	35	34708	Q35T3/12V/CL	12	100	C-6	1.75 cm		2000	1.8	550			$4.22	2a,2j,4c,4e,4f,9a, 9d,10b,10c	Clear, 12V
		35	48503	Q35T3/CL/CD 5PK	12	25	C-6	1.75 cm		2000	1.8	550			$4.22	2a,2j,4c,4e,4f,9a, 9d,10b,10c	Clear Carded
		50	34702	Q50T3/12V/CL	12	100	C-6	1.75 cm		2000	1.8	850			$6.02	2a,2j,4c,4e,4f,9a, 9d,10b,10c	Clear, 12V
T4	2-Pin GY6.35	50	97670	Q50T3/CL/SCD-5PK	12	25	C-6	1.75 cm	1.13	2000	1.8	950			$6.02	2a,2j,4c,4e,4f,9a, 9d,10b,10c	Display lights
		75	19377	Q75T4/CL/CD 5PK	12	25	C-6	1.75 cm	1.13	2000	1.8	1400			$9.03	2a,2j,4c,4e,4f,9a, 9d,10b,10c	Clear, Carded
T3	2-Pin GY6.35	100	34676	Q100T3/12V/CL	12	100	CC-6	1.75 cm		2000	1.8	2350			$12.05	2a,2j,4c,4e,4f,9a, 9d,10b,10c	Clear, 12V
		100	34663	Q100T3/24V/CL	24	100	CC-6	1.75		2000	1.8	2000			$12.05	2a,2j,4c,4e,4f,9a, 9d,10b,10c	Clear, 24V
High Voltage																	
T4	2-Pin G8	25	97664	Q25G8/SCD2	120	5	CC-2V	1.59	1.04	1500	1.4	240	2600		$3.01	1a,2a,2b,2e,4f,4i, 9a,10b,10c	Small Card, Twin Pack
		35	48428	Q35G8/CD2	120	5	CC-2V	1.77	1.34	1500	1.4	350	2600		$4.22	1a,2a,2b,2e,4f,4i,9a, 10b,10c	Carded
		50	21941	Q50G8/CD	120	5	CC-2V	1.77	1.33	1300	1.2	700	2750		$6.02	1a,2a,2b,2e,4f,4i, 9a,10b,10c	Carded
		50	97665	Q50G8/SCD	120	5	CC-2V	1.77	1.33	1300	1.2	700	2750		$6.02	1a,2a,2b,2e,4f,4i, 9a,10b,10c	Small Card
		50	72868	Q50G8/SCD2-PK5	120	5	CC-2V	1.77	1.33	1300	1.2	700	2750		$6.02	1a,2a,2b,2e,4f,4i, 9a,10b,10c	Small Card, Twin Pack
		75	97666	Q75G8/SCD	120	5	CC-2V	1.77	1.34	1500	1.4	900	2850		$9.03	1a,2a,2b,2e,4f,4i,7a, 9a, 10b,10c	Small Card
		75	47801	Q75G8/CD	120	5	CC-2V	1.77	1.34	1500	1.4	900	2850		$9.03	1a,2a,2b,2e,4f,4i,7a, 9a,10b,10c	Carded
		100	97667	Q100G8/SCD	120	5	CC-2V	1.77	1.34	1500	1.4	1300	2900		$12.05	1a,2a,2b,2e,4f,4i,7a, 9a, 10b,10c	Small Card
Quartzline®																	
HIR™ Recessed Single Contact (R7s)																	
T2.5	R7s	350	13894	Q350T3/CL/HIR	120	6	C-8	4.69	2.25	2000		10000	3075			1a,2a,2j,2k,4a,4c,4d, 4e,4f,4g,8a,9a,9d, 10b,10c,12b	IR, Clear, Horizontal
Halogen G9																	
T4	G9	25	16754	Q25G9/CD	120	5	CC-8	1.77	1.26	3000		240	6250			1a,2a,2b,2e,4f,4i,9a, 10b,10c	Carded
		25	81300	Q25G9/F/CD	120	5	CC-8	1.77	1.26	3000						1a,2a,2b,2e,4f,4i, 9a,10b,10c	Frosted, Carded
		40	16755	Q40G9/CD	120	5	CC-8	1.77	1.26	3000		480	2750			1a,2a,2b,2e,4f,4i,9a, 10b,10c	Carded
		40	81301	Q40G9/F/CD	120	5	CC-8	1.77	1.26	3000						1a,2a,2b,2e,4f,4i,9a, 10b,10c	Frosted, Carded
		60	16756	Q60G9/CD	120	5	CC-8	1.77	1.26	3000		780	2800			1a,2a,2b,2e,4f,4i,9a, 10b,10c	Carded
		60	81468	Q60G9/F/CD	120	5	CC-8	1.77	1.26	3000						1a,2a,2b,2e,4f,4i,9a, 10b,10c	Frosted, Carded
		75	16759	Q75G9/CD	120	5	CC-8	1.77	1.26	3000		1100	2850			1a,2a,2b,2e,4f,4i,9a, 10b,10c	Carded
		75	81469	Q75G9/F/CD	120	5	CC-8	1.77	1.26	3000						1a,2a,2b,2e,4f,4i,9a, 10b,10c	Frosted, Carded
Halogen Double Contact Bayonet (BA15d)																	
T4	D C Bay BA15d	100	16451	Q100DC	120	6	CC-8	2.44	1.38	2000		1550	2950			1a,2a,2j,4a,4c,4e,4f, 4g,8a,9a,9d,10b,10c	Frosted
		100	15508	Q100CL/DC	120	6	CC-8	2.44	1.38	2000		1600	2950			1a,2a,2j,4a,4c,4e,4f, 4g,8a,9a,9d,10b,10c	Clear
		100	44386	Q100CL/DC/2V	120	6	CC-2V	2.44	1.38	750 h		1800	2950			1a,2a,2j,4a,4c,4e,4f, 4g,8a,9a,9d,10b,10c	Clear
		150	44653	Q150DC	120	6	CC-8	2.50	1.38	2000		2700	2950			1a,2a,2j,4a,4c,4e,4f, 4g,8a,9a,9d,10b,10c	Frosted
		150	43693	Q150CL/DC	120	6	CC-8	2.50	1.38	2000		2800	2950			1a,2a,2j,4a,4c,4e,4f, 4g,8a,9a,9d,10b,10c	Clear
		150	44384	Q150CL/DC/2V	120	6	CC-2V	2.44	1.38	1000		2800	2950			1a,2a,2j,4a,4c,4e,4f, 4g,8a,9a,9d,10b,10c	Clear
		250	43701	Q250DC	120	6	CC-8	3.00	1.63	2000		4850	2950			1a,2a,2j,4a,4c,4e,4f, 4g,8a,9a,9d,10b,10c	Frosted
		250	43702	Q250DC	130/120	6	CC-8	3.00	1.63	2000		4850	2950			1a,2a,2j,4a,4c,4e,4f, 4g,8a,9a,9d,10b,10c	Frosted

* Based on 3 hours per day use.
** Based on 3 hours per day use, $0.11 per Kwh

For the most up-to-date product information, see www.gelighting.com. To convert inches to millimeters, multiply by 25.4.
All warning and caution notices found at the end of this section (page 2-17).

Halogen Lamps

Bulb Shape	Base Type	Watts	Order Code	Description	Volts	Case Qty	Filament Type	MOL (in)	LCL (in)	Rated Life (hrs)	Rated Life (yrs*)	Initial Lumens	Initial Color Temp	CBCP	Annual Operating Costs**	Warning and Caution Notices	Additional Information
Quartzline® (continued)																	
Halogen Double Contact Bayonet (BA15d) (continued)																	
T4	D C Bay BA15d	250	43697	Q250CL/DC	120	6	CC-8	3.00	1.63	2000		5000	2950			1a,2a,2j,4a,4c,4e,4f, 4g,8a,9a,9d,10b,10c	Clear
		250	43698	Q250CL/DC	130/120	6	CC-8	3.00	1.63	2000		5000	2950			1a,2a,2j,4a,4c,4e,4f, 4g,8a,9a,9d,10b,10c	Clear
		500	43709	Q500DC	120	6	CC-8	3.44	2.13	2000		10100	2950			1a,2a,2j,4a,4c,4e,4f, 4g,8a,9a,9d,10b,10c	Frosted
		500	43710	Q500CL/DC	120	6	CC-8	3.44	2.13	2000		10450	2950			1a,2a,2j,4a,4c,4e,4f, 4g,8a,9a,9d,10b,10c	Clear
Halogen Recessed Single Contact (R7s)																	
T3	R7s	100	73286	Q100T3/SCD-5PK	210	5	C-8	3.13	1.25	1500		1650	2950			1a,2a,2j,4a,4c,4e,4f, 4g,9a,9d,10b,10c,11a	Torchiere, Motion-Sensing and Security, Small Card
		100	22489	Q100T3/CL/CD 5PK	210	60	C-8	3.13	1.25	1500		1650	2950			1a,2a,2j,4a,4c,4e,4f, 4g,9a,9d,10b,10c,11a	Clear, Horizontal, Carded
		150	27449	Q150T3/117/CL/CD	120	60	C-8	4.69	2.25	1500		2400	2950			1a,2a,2j,4a,4c,4d,4e,4f, 4g,9a,9d,10b,10c,11a	Clear, Horizontal, Carded
		150	19378	Q150T3/CL/CD 5PK	120	60	C-8	3.13	1.25	1500		2400	2950			1a,2a,2j,4a,4c,4e,4f,4g, 9a,9d,10b,10c,11a	Clear, Horizontal, Carded
		150	73287	Q150T3/HD/SCD2-5PK	120	5	C-8	3.13	1.25	2000		2400	2950			1a,2a,2j,4a,4c,4e,4f,4g, 9a,9d,10b,10c,11a	Torchiere, Motion-Sensing and Security, Small Card
T2.5	R7s	250	22865	Q250T3/CL-6PK	120	144	C-8	3.13	1.25	1500		4000	2950			1a,2a,2j,4a,4c,4e,4f,4g, 9a,9d,10b,10c,11a	Clear, Horizontal
		250	22121	Q250T3/CL/CD 5PK	120	60	C-8	3.13	1.13	1500		4000	2950			1a,2a,2j,4a,4c,4e,4f,4g, 9a,9d,10b,10c,11a	Clear, Carded
		300	43703	Q300T3/CL-6PK	120	144	C-8	4.69	2.25	2000		5950	2950			1a,2a,2j,4a,4c,4d,4e,4f, 4g,9a,9d,10b,10c,11a	Clear, Horizontal
		300	19379	Q300T3/CL/CD 5PK	120	60	C-8	4.69	2.25	2000		5950	2950			1a,2a,2j,4a,4c,4d,4e,4f, 4g,9a,9d,10b,10c,11a	Clear, Horizontal, Carded
		300	27447	Q300T3CL/CD2-5PK	120	60	C-8	4.69	2.25	2000		5950	2950			1a,2a,2j,4a,4c,4d,4e,4f, 4g,9a,9d,10b,10c,11a	Clear, Horizontal, Carded
		300	97673	Q300T3/HD/SCD2	120	25	C-8	4.69	2.25	2000		5950	2950			1a,2a,2j,4a,4c,4d,4e,4f, 4g,9a,9d,10b,10c,11a	Torchiere, Small Card, Twin Pack
		500	23731	Q500T3/CL	120	12	C-8	4.69	2.25	2000		11100	3000			1a,2a,2j,4a,4c,4d,4e,4f, 4g,9a,9d,10b,10c,11a	Clear, Horizontal
		500	23733	Q500T3/CL	130/120	12	C-8	4.69	2.25	2000		10550	3000			1a,2a,2j,4a,4c,4d,4e,4f, 4g,9a,9d,10b,10c,11a	Clear, Horizontal
		500	23744	Q500T3/CL/6-12PK	120	144	C-8	4.69	2.25	1500		10950	3000			1a,2a,2j,4a,4c,4d,4e,4f, 4g,9a,9d,10b,10c,11a	Clear, 6 Filament Support, Rough Service, Horizontal
		500	19382	Q500T3/CL/CD 5PK	120	60	C-8	4.69	2.25	2000		11100	3000			1a,2a,2j,4a,4c,4d,4e,4f, 4g,9a,9d,10b,10c,11a	Clear, Horizontal, Carded
		500	27448	Q500T3CL/CD2-5PK	120	60	C-8	4.69	2.25	2000		11100	3000			1a,2a,2j,4a,4c,4d,4e,4f, 4g,9a,9d,10b,10c,11a	Clear, Horizontal, Carded
		500	97674	Q500T3/HD/SCD2	120	25	C-8	4.69	2.25	2000		11100	2950			1a,2a,2j,4a,4c,4d,4e,4f, 4g,9a,9d,10b,10c,11a	Special service, Motion-Sensing and Security, Small Card, Twin Pack
T3	R7s	1000	43711	Q1000T3/CL-6PK	230	144	C-8	10.06	6.13	2000		21500	3050			1a,2a,2j,2k,4a,4c,4d, 4e, 4f,4g,8a,9a,9d, 10b,10c,12b	Clear, Horizontal
		1000	43712	Q1000T3/CL-6PK	240	144	C-8	10.06	6.44	2000		21500	3050			1a,2a,2j,2k,4a,4c,4d, 4e, 4f,4g,8a,9a,9d, 10b,10c,12b	Clear, Horizontal
		1500	23828	Q1500T3/CL-12PK	208	144	C-8	10.06 cm	6.25 cm	2000		33000	3050			1a,2a,2j,2k,4a,4c,4d, 4e, 4f,4g,8a,9a,9d, 10b,10c,12b	Clear, Horizontal
		1500	23826	Q1500T3/CL-12PK	220	144	C-8	10.06	6.18	2000		35800	3050			1a,2a,2j,2k,4a,4c,4d, 4e, 4f,4g,8a,9a,9d, 10b,10c,12b	Clear, Horizontal
		1500	23830	Q1500T3/CL	240	12	C-8	10.06 cm	6.31 cm	2000		32000	3050			1a,2a,2j,2k,4a,4c,4d, 4e, 4f,4g,8a,9a,9d, 10b,10c,12b	Clear, Horizontal
		1500	23832	Q1500T3/CL	277	12	C-8	10.06	6.25	2000		34400	3050			1a,2a,2j,2k,4a,4c,4d, 4e, 4f,4g,8a,9a,9d, 10b,10c,12b	Clear, Horizontal

* Based on 3 hours per day use.
** Based on 3 hours per day use, $0.11 per Kwh

For the most up-to-date product information, see www.gelighting.com. To convert inches to millimeters, multiply by 25.4.
All warning and caution notices found at the end of this section (page 2-17).

Bulb Shape	Base Type	Watts	Order Code	Description	Volts	Case Qty	Filament Type	MOL (in)	LCL (in)	Rated Life (hrs)	Rated Life (yrs*)	Initial Lumens	Initial Color Temp	CBCP	Annual Operating Costs**	Warning and Caution Notices	Additional Information
Quartzline® (continued)																	
Halogen PAR56																	
PAR56	Mog End Pr	500	43494	Q500PAR56NSP	120	6	CC-6	5		4000		8000	2950	96000		1a,2a,2j,4b,4c,4f,4g, 7a,9b,10c	Narrow Spot
		500	43495	Q500PAR56MFL	120	6	CC-6	5		4000		8000	2950	43000		1a,2a,2j,4b,4c,4f,4g, 7a,9b,10c	Medium Flood
		500	43496	Q500PAR56WFL	120	6	CC-6	5		4000		8000	2950	19000		1a,2a,2j,4b,4c,4f,4g, 7a,9b,10c	Wide Flood
Halogen PAR64																	
PAR64	ExMog EndPr	1000	43497	Q1000PAR64NSP	120	6	CC-6	5		4000		19400	3000	200000		1a,2a,2j,4b,4c,4f,4g, 7a,9b,10c	Narrow Spot
		1000	43498	Q1000PAR64MFL	120	6	CC-6	5		4000		19400	3000	80000		1a,2a,2j,4b,4c,4f,4g, 7a,9b,10c	Medium Flood
		1000	43499	Q1000PAR64WFL	120	6	CC-6	5		4000		19400	3000	33000		1a,2a,2j,4b,4c,4f,4g, 7a,9b,10c	Wide Flood
Halogen Miniature Candelabra Screw (E11)																	
T4	Mini-Cand	100	16452	Q100MC	120	6	CC-8	2.81	1.38	2000		1550	2950			1a,2a,2j,4a,4c,4e,4f,4g, 9a,9d,10b,10c,12e	Frosted
		100	15507	Q100CL/MC	120	6	CC-8	2.81	1.38	2000		1600	2950			1a,2a,2j,4a,4c,4e,4f,4g, 9a,9d,10b,10c,12e	Clear
		100	44385	Q100CL/MC/2V	120	6	CC-2V	2.81	1.38	750 H		1800	2950			1a,2a,2j,4a,4c,4e,4f,4g, 9a,9d,10b,10c,12e	Clear
		100	19383	Q100CL/MC/CD 5PK	120	25	CC-8	2.81	1.38	2000		1600	2950			1a,2a,2j,4a,4c,4e,4f,4g, 9a,9d,10b,10c,12e	Clear, Carded
T3	Mini-Cand	75	12715	Q75CL/MC/CD	120	25	CC-8	2.50	1.25	1000		1050	2950			1a,2a,2j,4a,4c,4e,4f,4g, 8a,9a,9d,10b,10c,12e	Clear, Carded
T4	Mini-Cand	150	44654	Q150MC	120	6	CC-8	3.00	1.38	2000		2700	2950			1a,2a,2j,4a,4c,4e,4f,4g, 8a,9a,9d,10b,10c,12e	Frosted
		150	43694	Q150CL/MC	120	6	CC-8	3.00	1.38	2000		2800	2950			1a,2a,2j,4a,4c,4e,4f,4g, 8a,9a,9d,10b,10c,12e	Clear
		150	19386	Q150CL/MC/CD 5PK	120	25	CC-8	3.00	1.38	2000		2800	2950			1a,2a,2j,4a,4c,4e,4f,4g, 8a,9a,9d,10b,10c,12e	Clear, Carded
		250	43695	Q250MC	120	6	CC-8	3.16	1.63	2000		4850	2950			1a,2a,2j,4a,4c,4e,4f,4g, 8a,9a,9d,10b,10c,12e	Frosted
		250	43696	Q250MC	130/120	6	CC-8	3.16	1.63	2000		4850	2950			1a,2a,2j,4a,4c,4e,4f,4g, 8a,9a,9d,10b,10c,12e	Frosted
		250	43699	Q250CL/MC	120	6	CC-8	3.16	1.63	2000		5000	2950			1a,2a,2j,4a,4c,4e,4f,4g, 8a,9a,9d,10b,10c,12e	Clear
		250	43700	Q250CL/MC	130/120	6	CC-8	3.16	1.63	2000		5000	2950			1a,2a,2j,4a,4c,4e,4f,4g, 8a,9a,9d,10b,10c,12e	Clear
		400	43706	Q400MC	120	6	CC-8	3.62	2.00	2000		7850	2950			1a,2a,2j,4a,4c,4e,4f,4g, 8a,9a,9d,10b,10c,12e	Frosted
		400	43707	Q400CL/MC	120	6	CC-8	3.62	2.00	2000		8250	2950			1a,2a,2j,4a,4c,4e,4f,4g, 8a,9a,9d,10b,10c,12e	Clear
		500	47950	Q500CL/MC (EVR)	120	6	CC-8	3.62	2.00	2000		10450	2950			1a,2a,2j,4a,4c,4e,4f,4g, 8a,9a,9d,10b,10c,12e	Stage and Studio
Other																	
T4	DC PreFoc	45	14473	Q45T4/CL/DCR	6.6A	12	C-6	2.60	1.06	500		845	2850			1a,2a,2j,2k,4a,4c,4e,4f, 4g,8a,9a,9d,10b,10c	Airport and Airfield
	2-Pin Prefoc GY16d	200	40702	Q200T4/CL	200	12	CC-6	2.50	1.53	500		4500	3100			2a,2j,4a,4c,4d,4e,4f,4g, 8a,9a,9d,10b,10c	Clear, Airport, Base Down
T8	1" Ribbon Leads	500	88616	Q500T8/1CL	120	12	CC-8	4.25	2.50	500		13400	3200			1a,2a,2j,2k,4a,4c,4d,4e, 4f,4g,8a,9a,9d,10b, 10c,12b	Clear, Airport, Special Bulb
Airport																	
T4	PK30D	100	80584	Q6.6A100PK30d-m	6.6A	10	CBAR-6	2	0.79	1000		2700				2a,2j,4a,4c,4e,4f,4g, 8a,9a,9d,10b,10c	Airport, Male Spade
T8	PK30D	200	80586	Q6.6A200PK30d-m	6.6A	10	CC-6	2.3	0.79	1000		4800				2a,2j,4a,4c,4e,4f,4g, 8a,9a,9d,10b,10c	Airport, Male Spade
T9	PK30D	200	80590	Q6.6A200PK30d-f	6.6A	10	CC-6	2.3	0.79	1000		4800				2a,2j,4a,4c,4e,4f,4g, 8a,9a,9d,10b,10c	Airport, Female Spade
T4	1" Ribbon Leads	200	23857	Q6.6A/T4/5CL	6.6A	12	CC-8	3.00		500		5000				2a,2j,4a,4c,4e,4f,4g,8a, 9a,9d,10b,10c	Clear, Airport

* Based on 3 hours per day use.
** Based on 3 hours per day use, $0.11 per Kwh

For the most up-to-date product information, see www.gelighting.com. To convert inches to millimeters, multiply by 25.4.
All warning and caution notices found at the end of this section (page 2-17).

Bulb Shape	Base Type	Watts	Order Code	Description	Volts	Case Qty	Filament Type	MOL (in)	LCL (in)	Rated Life (hrs)	Rated Life (yrs*)	Initial Lumens	Initial Color Temp	CBCP	Annual Operating Costs**	Warning and Caution Notices	Additional Information
Airport (continued)																	
T4	D C Bay BA15d	200	23860	Q6.6AT4/DCR	6.6A	12	CC-6	2.50	1.06	500		5150				2a,2j,4a,4c,4e,4f,4g,8a, 9a,9d,10b,10c,12e	Clear, Airport, Ringed
PAR56	Scrw Term	200	33279	Q6.6A PAR56/3	6.6A	12	CC-6	4.5		1000				200000		2a,2j,4b,4c,4d,4f,4g, 7a,9b,10c	PAR, Airport, BDTH
PAR56	Mog End Pr	200	38271	Q6.6A PAR56/2	6.6A	12	CC-6	5		1000				16000		2a,2j,4b,4c,4d,4f,4g, 7a,9b,10c	PAR, Airport, BDTH
PAR56	Mog End Pr GX16d	200	18309	Q6.6A/PAR56/4	6.6A	12	CC-6	5.00		600						2a,2j,4b,4c,4d,4f,4g, 7a,9b,10c	PAR, Airport, Prismatic Lens, BDTH
PAR64	Mog End Pr	200	13224	Q6.6A/PAR 64/2P	6.6A	6	CC-6	4.5		2000				16000		2a,2j,4b,4c,4d,4f, 4g,7a,9b,10c	PAR, Airport, BDTH
PAR56	Scrw Term	300	32861	Q20A/PAR56/2		12	CC-6	4.5		500				200000		2a,2j,4b,4c,4f,4g, 7a,9b,10c	PAR, Airport, Burn Position: Any
PAR56	Mog End Pr	300	15482	Q20A/PAR56/C		12	CC-6	5		500						2a,2j,4c,4f,4g,7a, 9b,10c	PAR, Airport, Coated, Burn Position: Any
PAR56	Scrw Term	499	23863	Q20A/PAR56/3		12	CC-6	4.5		500				330000		2a,2j,4b,4c,4d,4f, 4g,7a,9b,10c	PAR, Airport, BDTH
PAR56	Mog End Pr	500	15485	Q20A/PAR56/1/C		12	CC-6	5		500						2a,2j,4c,4f,4g,7a, 9b,10c	PAR, Airport, Coated, Burn Position: Any
Tubular Quartz Heat																	
Sleeve																	
T3	Sleeve	500	21788	QH500T3/CL	120	12	C-8	8.80	4.81	5000			2400			1a,2a,2b,3a,4c,4d,4e, 4f,4g,9a,9d,10b,10c, 12b,12e	Infrared, Clear
		1000	22355	QH1000T3/CL	210	12	C-8	13.80	10.00	5000			2400			1a,2a,2b,3a,4c,4d,4e, 4f,4g,9a,9d,10b,10c, 12b,12e	Infrared, Clear
Recessed Single Contact (R7s)																	
T3	Sleeve	1000	22357	QH1000T3/CL	240	12	C-8	13.81	10.00	5000			2400			1a, 2a, 2b, 3a, 4c, 4d, 4e, 4f, 4g, 9a, 9d, 10b, 10c, 12b, 12e	Infrared, Clear
		1200	22531	QH1200T3/CL	144	12	C-8	8.80	6.13	5000			2450			1a, 2a, 2b, 3a, 4c, 4d, 4e, 4g, 9a, 9d, 10b, 10c, 12b, 12e	Infrared, Clear, Horizontal
		1200	22532	QH1200T3/CL/HT	144	12	C-8	8.80	6.13	5000			2450			1a, 2a, 2b, 3a, 4c, 4d, 4e, 4f, 4g, 9a, 9d, 10b, 10c, 12b, 12e	Infrared, Clear, High Temp, Construction, Horizontal
		1600	22686	QH1600T3/CL	210	12	C-8	19.80	15.88	5000			2350			1a,2a,2b,3a,4c,4d,4e, 4f,4g,9a,9d,10b,10c, 12b,12e	Infrared, Horizontal
		1600	22688	QH1600T3/CL	240	12	C-8	19.80	15.88	5000			2400			1a,2a,2b,3a,4c,4d,4e, 4f,4g,9a,9d,10b,10c, 12b,12e	Infrared, Clear, Horizontal
		1600	22695	QH1600T3/CL	277	12	C-8	19.80	15.88	5000			2400			1a,2a,2b,3a,4c,4d,4e, 4f,4g,9a,9d,10b,10c, 12b,12e	Infrared, Horizontal
		2500	22838	QH2500T3/CL	480	12	C-8	28.80	24.88	5000			2400			1a,2a,2b,3a,4c,4d,4e, 4f,4g,9a,9d,10b,10c, 12b,12e	Infrared, Clear, Horizontal
		3800	22875	QH3800T3/CL	575	6	C-8	41.80	38.00	5000			2500			1a,2a,2b,3a,4f, 5a,5b,9a, 9d,10c, 12b,12e	Infrared, Horizontal
T3	R7s	500	21787	QH500T3/CL/7	120	12	C-8	8.80	4.81	5000			2400			1a,2a,2b,3a,4c,4d,4e, 4f,4g,9a,9d,10b,10c, 12b,12e	Infrared, Clear
		1600	22691	QH1600T3/CL/7	240	12	C-8	19.80	15.88	5000			2400			1a,2a,2b,3a,4c,4d,4e, 4f,4g,9a,9d,10b,10c, 12b,12e	Infrared, Clear, Horizontal
T3	R7s	3650	10872	QH3650T3/CL/5	480	6	C-8	41.63	38.00	5000			2500			1a,2a,2b,3a,4f,5a,5b, 9a, 9d,10c,12b,12e	Infrared, Horizontal

* Based on 3 hours per day use.
** Based on 3 hours per day use, $0.11 per Kwh

For the most up-to-date product information, see www.gelighting.com. To convert inches to millimeters, multiply by 25.4.
All warning and caution notices found at the end of this section (page 2-17).

Bulb Shape	Base Type	Watts	Order Code	Description	Volts	Case Qty	Filament Type	MOL (in)	LCL (in)	Rated Life (hrs)	Rated Life (yrs*)	Initial Lumens	Initial Color Temp	CBCP	Annual Operating Costs**	Warning and Caution Notices	Additional Information
Tubular Quartz Heat (continued)																	
Other																	
T3	Ceramic Sleeve	2000	12716	QH2MT3/CL/HT/R	230	12	C-8	13.00	11.00	5000			2450			1a,2a,2b,3a,4c,4d,4e, 4f,4g,9a,9d,10b,10c, 12b,12e	Infrared, Clear, High Temp, Horizontal, Reflector 170°
T3	Sleeve	2000	15551	QH2MT3/1CL/HT/VB	240	12	C-8	11.90	9.60	500			2450			1a,2a,2b,3a,4c,4d,4e, 4f,4g,9a,9d,10b,10c, 12b,12e	Infrared, Clear, High Temp, Construction, Universal
	Sleeve	2000	22790	QH2M/T3/CL/HT	225	12	C-8	18.80	10.00	5000			2450			1a,2a,2b,3a,4c,4d,4e, 4f,4g,9a,9d,10b,10c, 12b,12e	Infrared, Clear, High Temp, Construction, Horizontal
	CER	2500	28126	QH2.5MT3/CL/HT/R	400	12	C-8	15.1	12.3	5000			2450			1a,2a,2b,3a,4c,4d,4e, 4f,4g,9a,9d,10b,10c, 12b,12e	Infrared, High Temp, Horizontal, Reflector 170
	CER	3000	28127	QH3MT3/CL/HT/R	400	12	C-8	15.1	12.3	5000			2450			1a,2a,2b,3a,4c,4d,4e, 4f,4g,9a,9d,10b,10c, 12b,12e	Infrared, High Temp, Horizontal, Reflector 170
T3	Wire Lead	6000	23843	QH6MT3/CL/HT	480	12	C-8	11.90	9.70	100			3250			1a,2a,2b,4c,4d,4e,4f,4g, 9a,9d,10b,10c,12b,12e	Infrared, Clear, High Temp, Horizontal

* Based on 3 hours per day use.
** Based on 3 hours per day use, $0.11 per Kwh

For the most up-to-date product information, see www.gelighting.com. To convert inches to millimeters, multiply by 25.4.
All warning and caution notices found at the end of this section (page 2-17).

General Information

Halogen Lamp Operating Precautions

The lamps listed in this catalog are filled to high internal gas pressures to maximize lamp efficacy (lumens per watt). Some general cautions are given below.

High Operating Temperatures

Since operating temperatures are critical to the effective self-cleaning properties of halogen lamps, filament tube wall temperatures should not go below 482°F (250°C). Hot spots on the bulb wall itself can go as high as 1230°F (700°C) in normal operation.

Substantial heat is generated in all halogen lamps, so equipment design should make allowance for the dissipation of excessive heat. Certain lamps and extremely confined fixtures may require additional ventilation or heat sinking to ensure proper operation of the halogen cycle and to prevent damage to the fixture. It is a good practice to test the lamp in the operating environment early in the design cycle to ensure adequate performance. Precautions must be taken in the selection of materials for lampholders, reflectors and lamp housings because the 1230°F (700°C) bulb wall temperature is greater than the kindling temperature of many materials. Lamp base temperatures should not exceed 662°F (350°C) because, above that point, lead wires may deteriorate and the basing cement loosen, causing premature lamp failure.

Distribution of Spectral Radiation

Halogen lamps offer large amounts of visible and infrared energy from a small light source, with about 90% of the energy in the infrared. Some halogen lamps can be used for special applications where small amounts of ultraviolet energy are required. The slight ultraviolet radiation that comes from unprotected sources could cause skin and eye irritation following extended direct exposure. Passing the light through ordinary glass or plastic provides adequate protection. The lenses of the PAR, TAL or Cover Glass Precise™ lamps provide this protection.

Quartz Heat Lamps

GE standard quartz heat products are primarily pressurized halogen lamps. Many standard tungsten coil filaments have been converted to a deflection coil winding design that eliminates the need for filament supports through an integral coil/support construction. These changes will improve lamp life as well as keep the bulb wall cleaner during operation and throughout the life of the lamp.

In general, halogen lamps are more efficient than ordinary incandescent lamps. HIR™ lamps are the most efficient halogen lamps we offer. For each application, check life, lumens, wattage, beam spread and lamp dimensions to determine proper bulb selection.

GE has added a reflectorized heat lamp with a patented design that directs the infrared to a surface rather than in 360° angle.

Halogen Caution Notice – General

Halogen lamps are constructed of a glass bulb with a pressurized internal filament tube that operates at high temperatures and could unexpectedly shatter. Should the outer bulb break, particles of extremely hot glass could be discharged into the fixture enclosure and/or surrounding environment, thereby creating a risk of personal injury or fire.

Operating Notes

- Turn power off and let lamp cool before removal to avoid potential burn and electrical shock during lamp replacement
- Do not use lamp if outer glass is scratched or broken because it may break during installation or later during operation
- Do not use lamp in close proximity to combustible materials or those adversely affected by drying or fading action because of heat radiation in the lamp beam
- Dispose of removed lamp with care such as placing in used lamp carton or other closed container

Compact PAR Lamps (PAR20/30)

- Use outdoors in enclosed fixtures or where protected from exposure to water

Quartzline® PAR (250W)

- Avoid use where exposured to moisture which may cause lamp to break or shatter
- Do not operate lamp over 110% rated voltage. Overvoltage operation increases pressure and tendency to break.
- Use this lamp only in fixtures designed for Q250PAR38 lamps

Halogen A-Line (TB/H)

Caution: Cracked or broken bulbs that still light should be replaced immediately. The inner tube of the GE Halogen lamp is pressurized, operates at high temperature and could unexpectedly shatter with the possibility of property damage or personal injury. Avoid use in unstable table lamps, dispose of with care. To avoid burns, electricity should be switched off and the lamp allowed to cool for several minutes before removing from socket. Use outdoors only in enclosed fixtures or where protected from exposure to water.

Operating Notes – Low Voltage Lamps

Low voltage tungsten-halogen lamps are sensitive to voltage variations. Even a small change in voltage can have a considerable impact on lamp life. Designers should match fixture transformer ratings to actual line voltages to ensure that the lamps operate at as close to 12 volts as possible.

Rapid cycling can also shorten lamp life, and designers should take advice from their GE Lighting representative before using these lamps in flashing or blinking applications.

The lamps may be dimmed by reducing voltage. However, this may cause the bulbs to blacken. If this occurs the lamp should be run at full voltage for fifteen minutes, thereby clearing the problem. Note that the nature of low voltage lighting systems requires the use of fluorescent-type dimmers. Lamp can be operated on AC or DC currents.

Warning and Caution Notices

1

⚠ WARNING

Risk of electric shock

a. Turn power off before inspection, installation or removal
b. Turn power off if glass bulb is broken, even if bulb continues to light. Remove and dispose of lamp.
c. Do not open. No user serviceable parts inside.

2

⚠ WARNING

Risk of fire

a. Keep combustible materials away from lamp
b. Use in fixture rated for this product
c. Use in fixture rated for this product—see instructions
d. Operate base down to horizontal only
e. In table lamp use only with shade
f. Do not use in enclosed fixture or with lamp shade
g. Use in high intensity fixture rated for this product
h. Do not use as a night light
i. Burning position base down only
j. Use in enclosed fixture rated for this product
k. Fire Hazard! Do not use in Torchieres or other indoor residential fixtures

3

⚠ WARNING

Lamp emits IR radiation which may cause eye injury

a. Avoid exposure of eyes and skin to unshielded lamp

4

⚠ WARNING

Pressurized lamp—unexpected rupture may cause injury, fire, or property damage

a. Use eye protection when handling lamp
b. Avoid direct water/liquid contact
c. Use in enclosed fixture rated for this product
d. Operate lamp only in specified position
e. Do not touch glass with bare hands
f. Do not use lamp if outer glass is scratched or broken
g. Do not exceed 110% of rated voltage
h. Do not use where directly exposed to water or outdoors without an enclosed fixture
i. Do not exceed rated voltage
j. Do not use lamp if outer jacket is scratched or broken, even if bulb continues to light. Turn power off, remove and dispose.
k. Do not use in wet locations

5

⚠ WARNING

Unexpected lamp rupture may cause injury, fire, or property damage

a. Do not touch glass with bare hands
b. Operate lamp only in specified position
c. Use in enclosed fixture rated for this product
d. Do not use lamp if outer glass is scratched or broken
e. Avoid direct water, liquid or metal contact

6

⚠ WARNING

Risk of burn

a. Do not touch operating lamp

7

⚠ WARNING

A damaged lamp emits UV radiation which may cause eye/skin injury

a. Turn power off if glass bulb is broken. Remove and dispose of lamp.

8

⚠ WARNING

Lamp emits UV radiation which may cause eye/skin injury.

a. Avoid exposure of eyes and skin to unshielded lamp

9

⚠ CAUTION

Risk of burn

a. Allow lamp to cool before handling
b. Allow lamp/fixture to cool before handling
c. Do not touch operating lamp
d. Turn power off before installing lamp

10

⚠ CAUTION

Lamp may shatter and cause injury if broken

a. Wear safety glasses and gloves when handling lamp
b. Dispose of lamp in a closed container
c. Do not use lamp if outer glass is scratched or broken

11

⚠ CAUTION

Lamp emits UV radiation which may cause eye/skin irritation.

a. Minimize exposure

12

OP. INST.

a. Burning position – base up
b. Burning position – horizontal
c. Burn base down only
d. Burn base down to horizontal
e. Limit seal temp to 650°F. Maintain min bulb wall temp of 500°F for operation of halogen cycle

Cross-Reference

GE Description	Osram/ Sylvania Description	Philips Description
Order This GE Lamp	If you currently use these lamps	
Halogen PAR Lamps		
60PAR16/H/SP10	60PAR16/CAP/NSP10	60PAR16/HAL/NSP10
60PAR16/H/FL30	60PAR16/CAP/NFL30	60PAR16/HAL/NFL27
75PAR16/H/SP10	75PAR16/CAP/NSP10	–
75PAR16/H/FL30	75PAR16/CAP/NFL30	–
50PAR20/H/SP10	50PAR20/CAP/SPL/NSP10	50PAR20/HAL/NSP9
50PAR20/H/FL25	50PAR20/CAP/SPL/NFL30	50PAR20/HAL/NFL30
50PAR30/H/SP10	50PAR30/CAP/SPL/NSP9	50PAR30S/HAL/NSP10
50PAR30/H/FL25	50PAR30/CAP/SPL/NFL25	50PAR30S/HAL/NFL30
50PAR30/H/FL35	50PAR30/CAP/SPL/FL40	50PAR30S/HAL/FL40
50PAR30L/H/SP10	50PAR30LN/CAP/SPL/NSP9	50PAR30L/HAL/NSP9
50PAR30L/H/FL40	50PAR30LN/CAP/SPL/NFL30	50PAR30L/HAL/NFL30
50PAR30L/H/WFL	50PAR30LN/CAP/SPL/WFL50	50PAR30L/HAL/WFL60
60PAR30/H/NSP9	60PAR30/CAP/SPL/NSP9	60PAR30S/HAL/NSP10
60PAR30/H/FL25	60PAR30/CAP/SPL/NFL25	60PAR30S/HAL/NFL30
60PAR30/H/FL35	–	60PAR30S/HAL/NFL40
75PAR30/H/SP10	75PAR30/CAP/SPL/NSP9	75PAR30S/HAL/NSP10
75PAR30/H/FL25	75PAR30/CAP/SPL/NFL25	75PAR30S/HAL/NFL30
75PAR30/H/FL35	75PAR30/CAP/SPL/FL40	75PAR30S/HAL/FL40
75PAR30L/H/SP10	75PAR30LN/CAP/NSP9	75PAR30L/HAL/NSP9
75PAR30L/H/FL25	75PAR30LN/CAP/NFL25	75PAR30L/HAL/NFL30
75PAR30L/H/WFL	75PAR30LN/CAP/WFL40	75PAR30L/HAL/FL40
45PAR/H/SP10	45PAR/CAP/SPL/SP9	45PAR38/HAL/SP12/LL
45PAR/H/FL25	45PAR/CAP/SPL/FL30	45PAR38/HAL/FL28/LL
50PAR/H/SP10	50PAR38/HAL/SP9	–
50PAR/H/FL25	50PAR38/HAL/FL30	–
60PAR/H/SP10	60PAR/CAP/SPL/SP10	60PAR38/HAL/NSP10/WLL
60PAR/H/FL25	60PAR/CAP/SPL/NSL25	60PAR38/HAL/FL28/WLL
75PAR/H/NSP9	75PAR/CAP/SPLSP9	75PAR38/HAL/SP10/WLL
75PAR/H/FL25	75PAR/CAP/SPL/FL30	75PAR38/HAL/FL28/WLL
90PAR/H/SP10	90PAR/CAP/SPL/SP9	90PAR38/HAL/SP12/LL
90PAR/H/FL25	90PAR/CAP/SPL/FL30	90PAR38/HAL/FL28/LL
90PAR/H/WFL	90PAR/CAP/SPL/WFL50	90PAR38/HAL/WFL60/WLL
100PAR/H/SP10	100PAR38/HAL/SP9	–
100PAR/H/FL25	100PAR38/HAL/FL30	–
120PAR/H/SP9	120PAR/CAP/SPL/SP10	–
120PAR/H/FL30	120PAR/CAP/SPL/FL30	–
Halogen HIR™ PAR Lamps		
45PAR30/HIR/SP9XL	–	45PAR30/IRC/HAL/SP10
45PAR30/HIR/FL25XL	–	45PAR30/IRC/HAL/FL25
45PAR30/HIR/FL35XL	–	45PAR30/IRC/HAL/FL40
50PAR30/HIR/SP9	50PAR30/CAP/IR/NSP9	50PAR30S/IRC/NSP10
50PAR30/HIR/FL25	50PAR30/CAP/IR/NFL25	50PAR30S/IRC/NFL30
50PAR30/HIR/FL35	50PAR30/CAP/IR/FL40	50PAR30S/IRC/FL40
Halogen HIR™ PAR38 Lamps		
45PAR/HIR/FL40XL	–	45PAR38/IRC/WFL
45PAR/HIR+/SR10	–	–
45PAR/HIR+/FL25	–	–
48PAR/HIR+/SP10	–	–
48PAR/HIR+/FL25	–	–
50PAR/HIR/SP6	–	–
50PAR/HIR/SP9	50PAR38/CAP/IR/SP9	50PAR38/IRC/SP10
50PAR/HIR/FL25	50PAR38/CAP/IR/NFL25	50PAR38/IRC/FL25
50PAR/HIR/S/SP10	–	–
50PAR/HIR/S/FL25	–	–
55PAR/HIR+/SP10	–	–
55PAR/HIR+/FL25	–	–
60PAR/HIR/SP10	60PAR38/CAP/IR/SP9	60PAR38/IRC/SP12
60PAR/HIR/FL30	60PAR38/CAP/IR/FL30	60PAR38/IRC/FL25
60PAR/HIR/FL40	–	60PAR38/IRC/HAL/FL40
60PAR/HIR/S/SP10	–	–

GE Description	Osram/ Sylvania Description	Philips Description
Order This GE Lamp	If you currently use these lamps	
Halogen HIR™ PAR38 Lamps (continued)		
60PAR/HIR/S/FL25	–	–
60PAR/HIR+/SP10	–	–
60PAR/HIR+/FL25	–	–
67PAR/HIR+/SP10	–	–
67PAR/HIR+/FL25	–	–
70PAR/HIR/SP10	–	70PAR38/IRC/HAL/SP10
70PAR/HIR/FL25	–	70PAR38/IRC/HAL/FL25
80PAR/HIR/SP10	80PAR/CAP/IR/SP10	–
80PAR/HIR/SP12	80PAR/CAP/IR/SP12	–
80PAR/HIR/FL25	80PAR/CAP/IR/FL25	–
83PAR/HIR+/SP10	–	–
83PAR/HIR+/FL25	–	–
90PAR/HIR/SP12XL	–	–
90PAR/HIR/FL40XL	–	–
100PAR/HIR/SP10	100PAR/CAP/IR/SP10	100PAR38/IRC/SP10
100PAR/HIR/FL25	100PAR/CAP/IR/NFL25	100PAR38/IRC/FL25
100PAR/HIR/FL40	100PAR/CAP/IR/FL40	100PAR38/IRC/WFL
Halogen MR11 Lamps		
Q20MR11/SP15	20MR11/SP10/FTB	20MRC11/SP10
Q20MR11/NFL30	20MR11/FL35/FTD	20MRC11/FL30
Q35MR11/NSP20	35MR11/SP10/FTE	–
Q35MR11/NFL30	35MR11/FL40/FTH	35MRC11/FL30
Halogen Standard MR16 Lamps		
Q20MR16/SP	20MR16/NSP8/ESX	20MRC16/SP10
Q20MR16/FL	20MR16/FL40/BAB	20MRC16/FL36
Q50MR16/SP	50MR16/NSP12/EST	50MRC16/SP10
Q50MR16/FL	20MR16/FL40/EXN	50MRC16/FL38
Halogen ConstantColor® Precise™ MR16 Lamps		
Q20MR16/C/VNSP7	20MR16/T/NSP/10	20MRC16/CC/SP10
Q20MR16/C/NSP15	–	20MRC16/CC/NFL24
Q20MR16/C/FL40	20MR16/T/NFL40	20MRC16/CC/FL38
Q35MR16/C/SP20	35MR16/T/NFL25	–
Q35MR16/C/FL40	35MR16/T/FL40	–
Q42MR16/C/VNSP9	50MR16/T/NSP10	–
Q50MR16/C/NSP15	–	50MRC16/CC/SP10
Q50MR16/C/NFL25	50MR16/T/NFL25	50MRC16/CC/NFL24
Q50MR16/C/NFL30	–	–
Q50MR16/C/FL40	50MR16/T/FL40	50MRC16/CC/NFL38
Q50MR16/C/WFL55FNV	50MR16/T/WFL60	–
Q71MR16/C/NSP15	65MR16/T/NSP10	–
Q71MR16/C/NFL25	65MR16/T/NFL25	–
Q71MR16/C/FL40	65MR16/T/FL40	–
Halogen HIR™ MR16 Lamps		
Q20MR16/HIR/CG10	20MR16/IR/SP10/C	20MRC16/IRC/ALW/SP8
Q20MR16/HIR/CG25	20MR16/IR/NFL25/C	–
Q20MR16/HIR/CG35	20MR16/IR/FL35/C	20MRC16/IRC/ALW/FL36
Q37MR16/HIR/CG10	37MR16/IR/NSP10C	35MRC16/IRC/SP8
Q37MR16/HIR/CG25	37MR16/IR/NFL25C	35MRC16/IRC/NFL24
Q37MR16/HIR/CG40	37MR16/IR/FL40C	35MRC16/IRC/FL36
Q50MR16/HIR/CG10	50MR16/IR/NSP10C	45MRC16/IRC/SP8
Q50MR16/HIR/CG25	50MR16/IR/NFL25C	45MRC16/IRC/NFL24
Q50MR16/HIR/CG40	50MR16/IR/FL40C	45MRC16/IRC/FL36
Halogen Bi-Pin Low Voltage		
Q5T3/CL	5T3Q/CL	5W12V/Capsule
Q10T3/CL	10T3Q/CL	10W12V/Capsule
Q20T3/CL	20T3Q/CL/AX	20W12V/Capsule
Q35T3/CL	35TQ/CL/AX	35W12V/Capsule
Q50T3/CL	50T4Q/CL	50W12V/Capsule
Q75T4/CL	75T4Q/CL/RP	

Cross-Reference (continued)

GE Description	Osram/ Sylvania Description	Philips Description
Order This GE Lamp	If you currently use these lamps	
Halogen Single-Ended		
Q100CL/DC	100Q/CL/DC	100Q/CL/DC
Q100CL/MC	100Q/CL/MC	100Q/CL
Q100DC	100Q/DC	–
Q150CL/DC/2V	150Q/CL/DC/1	–
Q150CL/DC	150Q/CL/DC	150Q/CL/DC
Q150CL/MC	150Q/CL/MC/2	150Q/CL
Q150CL/MC/2V	150Q/CL/MC	–
Q150DC	150Q/DC	150Q/DC
Q150MC	150Q/MC	150Q
Q250CL/DC	250Q/CL/DC	250Q/CL/DC
Q250CL/MC	250Q/CL/MC/2	250Q/CL
Q250DC	250Q/DC	–
Q250MC	250Q/MC	–
Halogen Double-Ended		
Q100T3/CL/CD	100T3Q/CL	BC100T3Q/CL/TP
Q150T3/CL	150T3Q/CL	BC100T3Q/CL/TP
Q300T3/CL	300T3Q/CL	300T3Q/P/CL
Q500T3/CL	500T3Q/CL	500T3Q/P/CL

Notes

High Intensity Discharge Lamps

Bulb Identification

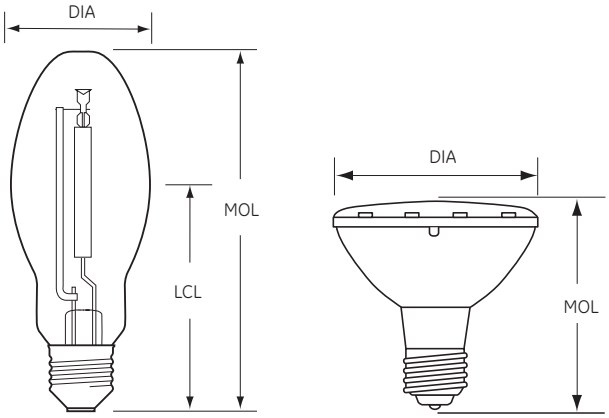

DIA: Diameter of bulb at widest point.

MOL: Maximum Overall Length including base or pins.

LCL: Distance between the center of the arc tube and the Light Center Length reference plane.

Note: Lamp drawings are not drawn to scale. Be sure to check size and dimension information when identifying each lamp.

To convert inches to millimeters, multiply the dimension (in inches) by 25.4 (i.e. 1.5" x 25.4 = 38.1 mm).

Lamp Locator

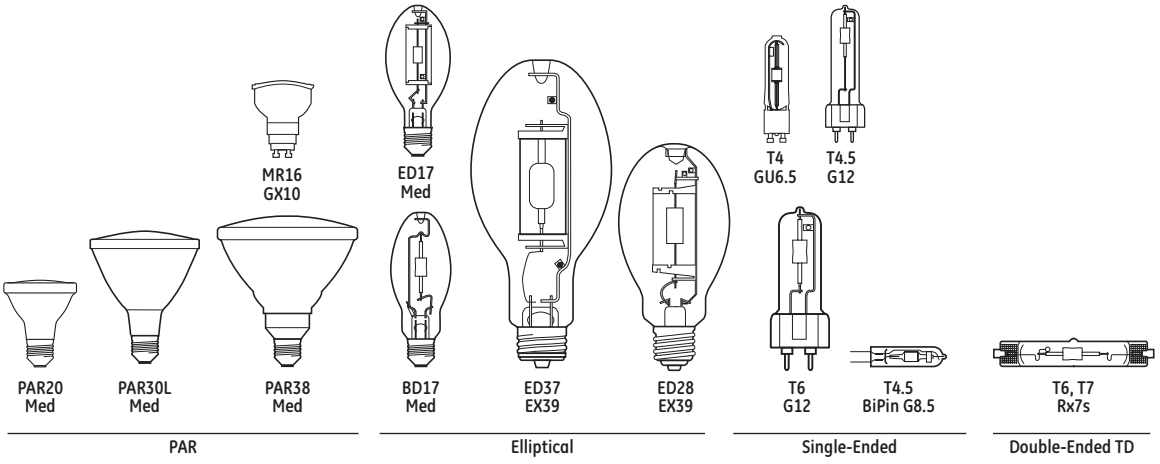

ConstantColor® CMH® Ceramic Metal Halide

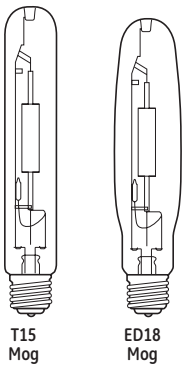

CMH® Chromafit™ Ceramic Metal Halide (HPS Retrofit Lamps)

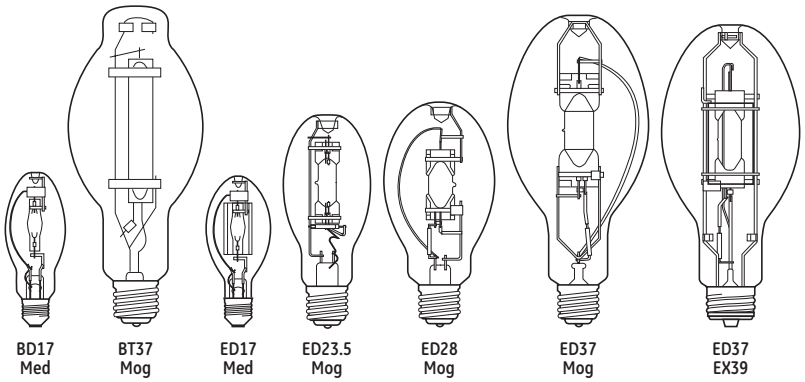

PulseArc® Multi-Vapor® Metal Halide Lamps

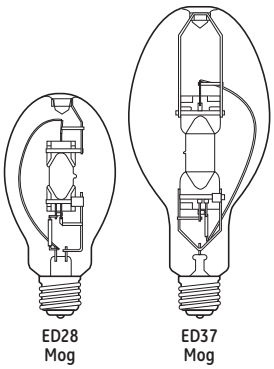

Chromafit™ Multi-Vapor® Metal Halide Lamps (HPS Retrofit Lamps)

Lamp Locator (continued)

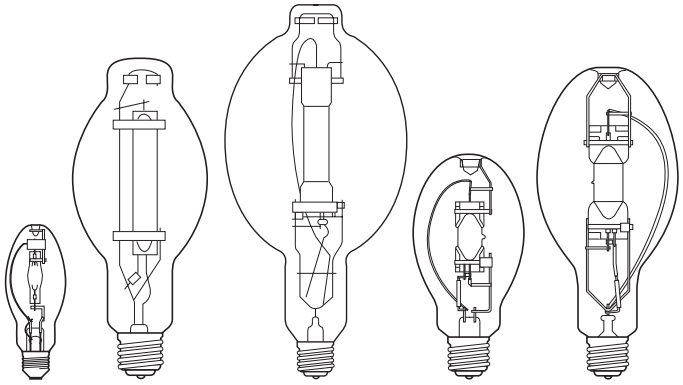

BD17 Med | BT37 Mog | BT56 Mog | ED28 Mog | ED37 Mog

Multi-Vapor® Metal Halide Lamps

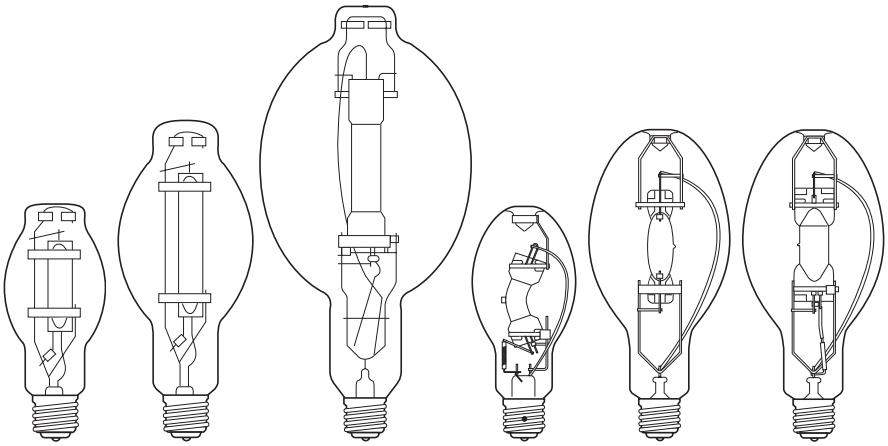

BT28 Mog | BT37 Mog | BT56 Mog | ED28 Pos Mog | ED37 Mog | ED37 Mog

High Output and XHO Multi-Vapor® Metal Halide Lamps

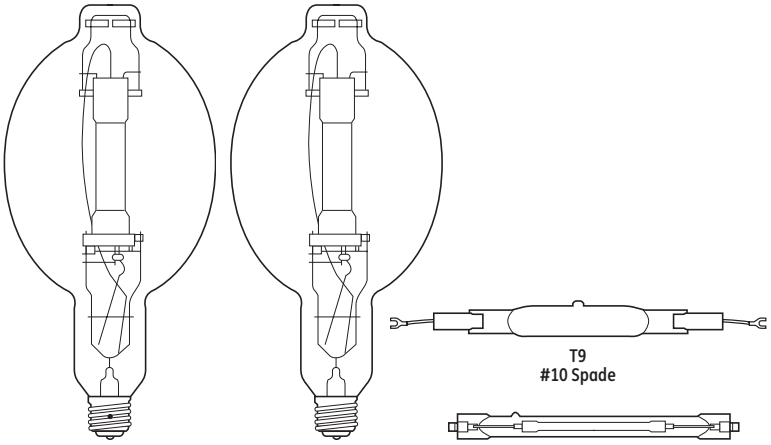

BT56 Pos Mog | BT56 Mog | T9 #10 Spade | T7 Rx7s

Sports Lighting

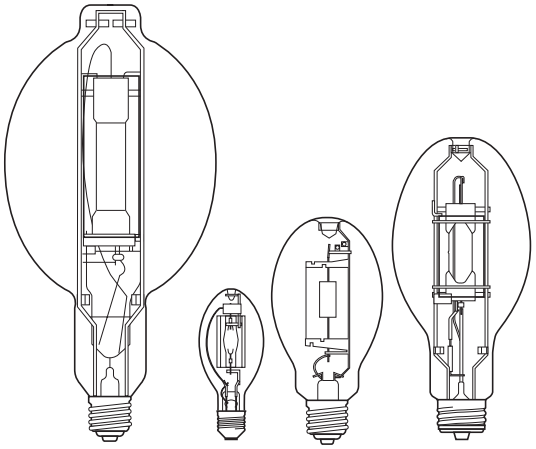

BT56 Mog | ED17 Med | ED28 EX39 | ED37 EX39

Protected Multi-Vapor® Metal Halide Lamps

Lamp Locator (continued)

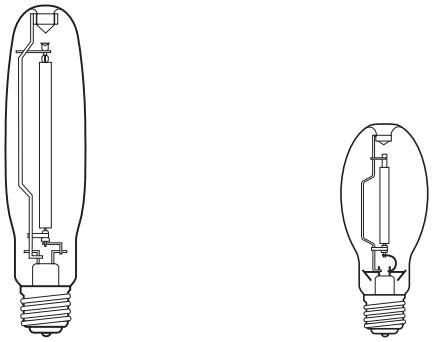

Ecolux® NC Non-Cycling High Pressure Sodium Lamps
(TCLP Compliant)

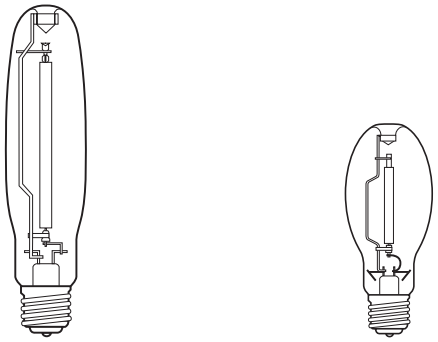

Ecolux® High Pressure Sodium Lamps
(TCLP Compliant)

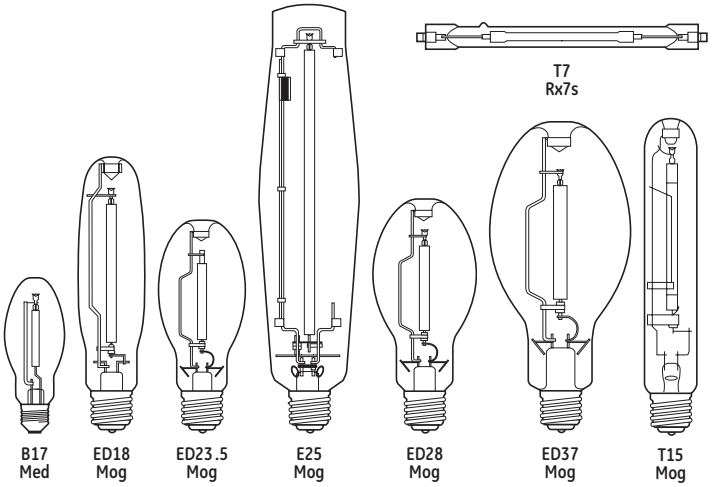

Lucalox® High Pressure Sodium Lamps

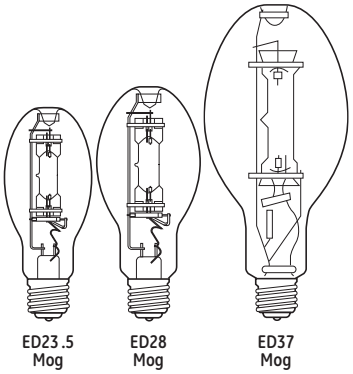

Mercury Lamps

Base Identification

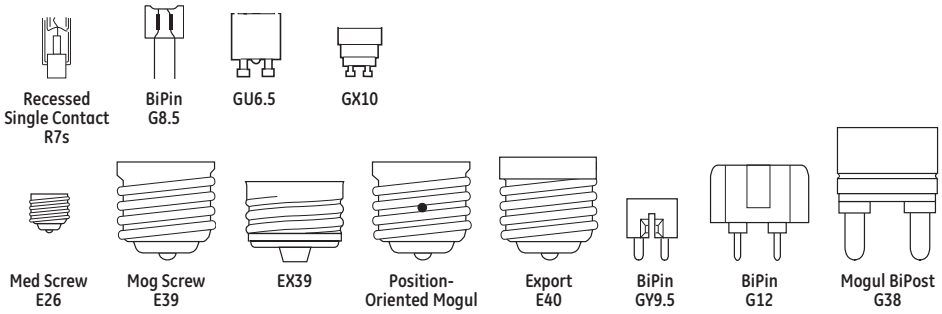

Introduction

GE HID lamps provide the following benefits:

High Efficacy/Low Operating Cost.
HID is generally the most efficient light source. Better efficiency almost always means lower operating cost.

Long Life.
Most HID lamps have life ratings that are better than incandescent lamps and similar to fluorescent lamps.

Compact Size.
An HID lamp produces high light output from a relatively compact source. Like incandescent, it is a "point" light source, which allows for good optical control.

The chart at right shows how HID lamps compare to incandescent, halogen, and fluorescent in terms of efficiency and rated life. Efficiency is measured in lumens per watt (LPW). Rated life for most lamp types is the number of burning hours when 50% of the tested samples have failed and 50% are still operational. For both HID and fluorescent, lamp life depends on the number of hours per start.

The combination of high efficiency and long life makes HID an ideal light source for many commercial and industrial applications.

Typical Lamp Characteristics

Lamp Type	Typical LPW	Rated Life (in hours)
Incandescent	5-22	750-2000
Halogen	12-36	2,000-6000
Compact Fluorescent	27-80	9,000-20,000
Fluorescent	75-100	5,000-36,000
Mercury	50-60	12,000-24,000+
ConstantColor® CMH®	80-95	10,000-20,000
Multi-Vapor® Metal Halide	80-115	10,000-20,000
Lucalox® High Pressure Sodium	90-140	10,000-40,000

Suggested Color Applications for HID Lamps

CMH®: Stores, people places, display, accent.

MVR: Stores, public spaces, industrial, gymnasiums, floodlighting signs and buildings, parking areas, sports.

MVR/C: Same as MVR – warmer color-diffuse coating reducing glare.

MXR: Warm color (3200K) – good match for halogen.

LU: Street lighting, parking areas, industrial, floodlighting, security, CCTV.

LU/DX: Floodlighting, parking areas, indoor/outdoor pedestrian malls, industrial, security, roadway.

Deluxe (DX) Mercury: Stores, public spaces – metal halide lamps however, are preferred.

Clear Mercury: Landscape lighting, specialized floodlighting such as green copper roofs.

Product Information

GE ConstantColor® CMH® and CMH® Ultra Ceramic Metal Halide Lamps (pgs 3-9 to 3-11)

- Color uniformity lamp-to-lamp and over lamp life
- Excellent color rendering (80+ CRI, 90+ CRI for SPXX versions)
- Delivers more light than standard metal halide (10%–20% more)
- Lamp operates at high efficacy—up to 95 lumens per watt
- Many are universal burn—may be operated in any position
- Perfect for retail and commercial display lighting, accent and floodlighting, lobby and foyer lighting. Ideal for "people places"

GE CMH® Chromafit™ Ceramic Metal Halide Lamps (pg 3-11)

- Convert High Pressure Sodium sockets to crisp, white ceramic metal halide light (80+ CRI)
- Operate on standard HPS ballasts and auxiliary equipment
- Universal burn—may be operated in any position
- Uses: Area lighting, industrial and "people places"
- Enclosed glass fixtures only

GE PulseArc® Medium Based Metal Halide Lamps (/MED models) (pg 3-12)

- Low wattage metal halide lamps (formerly Halarc®) are now part of the PulseArc® family
- Compact source
- Sparkling white light (3000-4000K) and very good color rendition (70-75 CRI)
- High efficacy—more than 3 times the lumens per watt of incandescent
- Long life—up to 15 times longer than incandescent systems and up to 7 times longer than most PAR and R systems, saving maintenance and labor costs
- Superior optical control
- Uses: Display lighting, downlighting, floodlighting, corridors, lobbies, walkways; retail, office, commercial

GE PulseArc® Multi-Vapor® Metal Halide Lamps (/PA Models) (pgs 3-12 to 3-13)

- Designed for operation only on approved ballasts with metal halide pulse ignitors
- More light—400W lamps provide highest initial and highest maintained lumens versus other standard universal or vertical base-up lamp options
- 50% longer life—400W lamps provide 30,000 hours life when burned on 120 hour on/1 hour off cycle (approximately continuous)
- Faster hot restrike—less than 4 minutes versus 10-15 minutes for typical metal halide lamps

GE Multi-Vapor® Metal Halide Lamps (pg 3-13)

- Sparkling white light (3000-4000K) and very good color rendition (65-75 CRI)
- Warm, rich 3000K color of SP30 blends well with incandescent, halogen and triphosphor fluorescent lamps for interior retail applications
- High efficacy—more efficient than incandescent, mercury and most fluorescent sources
- Long life—10,000-20,000 hours for most types
- Full line, 150-1000 watts, to meet most application needs
- Uses: Downlighting, floodlighting, corridors, lobbies, walkways; retail, commercial, industrial

GE High Output Multi-Vapor® Lamps (pgs 3-13 to 3-14)

- More light—optimized for higher light output in horizontal, vertical base-up and base-down burn applications
  - Horizontal burn lamps provide up to 25% more light than standard universal burn equivalents
  - 400W vertical burn lamps provide up to 22% more light than standard universal burn equivalents; the highest lumen lamps available for operation on standard M59 ballasts
- Longer life—horizontal burn lamps last up to 67% longer than universal burn lamp equivalents, significantly reducing replacement lamp and maintenance costs

GE Protected High Output Multi-Vapor® Lamps (/O) (pgs 3-14 to 3-15)

- Protective quartz jacket surrounds the arc tube
- The/O suffix and/or the "MPR" prefix in the Lamp Description indicates lamps are suitable for open fixture applications

GE ChromaFit™ Multi-Vapor® Lamps (/R) (pg 3-15)

- Convert high pressure sodium sockets to crisp white metal halide light (65-70 CRI)
- Operate on standard HPS ballasts and auxiliary equipment
- Uses: Area lighting, industrial and "people places"

GE Lucalox® High Pressure Sodium Lamps (pg 3-15)

- Very high efficacy/low operating cost
- Excellent lumen maintenance—over 90% @ 50% of life
- Very long life—24,000+ hours
- Universal burn—can be operated in any position without affecting performance
- Warm color
- For open or enclosed fixtures
- Uses: Industrial, roadway, security, floodlighting

GE Ecolux® High Pressure Sodium Lamps (/ECO) (pgs 3-15 to 3-16)

- Lead-free base. Passes TCLP, which can lower disposal costs.

GE Standby Longlife Lucalox® and Ecolux® Lamps (/SBY) (pgs 3-16 to 3-17)

- Extra arc tube provides light instantly after momentary power interruption, and will increase to 80% light output in 1-2 minutes
- Dual arc tubes provide 40,000 hour rated life
- Operates on standard HPS ballasts and auxiliary equipment
- Uses: Industrial, roadway, security, and hard-to-reach sockets
- Ecolux® lamps use lead-free bases. Passes TCLP, which can lower disposal costs.

Product Information (continued)

GE Ecolux® NC "Non-Cycling" High Pressure Sodium Lamps (/ECO/NC) (pg 3-17)

- Low mercury. Passes TCLP, which can lower disposal costs.
- Non-cycling feature makes locating and replacing end-of-life lamps quick and easy
- Lead-free base
- High efficacy/low operating cost
- 6%-11% higher initial lumens than standard HPS in 100W and 400W versions
- Long life—up to 40,000 hours
- Open or enclosed fixtures
- Uses: Industrial, roadway, security

GE Mercury Lamps (pg 3-17)

- Long life and good efficacy
- Phosphor coated Deluxe lamps provide good color rendering (50CRI)
- Uses: Industrial, roadway, landscapes, residential and commercial security, parking lots

HID Brand Name Cross-Reference

GE	OSRAM/SYLVANIA	PHILIPS
ChromaFit™ Multi-Vapor®	—	—
ConstantColor® CMH®	Powerball® MCP	MasterColor® CDM
Deluxe Lucalox®	—	Ceramalux™ Comfort
E-Z Lux®	Unalux®	Ceramalux™ Retrolux
Ecolux®	Lumalux ECO®	Ceramalux Alto®
Ecolux® NC	Lumalux Plus™/ECO®	Ceramalux Alto® Plus
High Output Multi-Vapor®	Super Metalarc®	Metal Halide
Horizontal Multi-Vapor®	Super Metalarc®	—
Lucalox®	Lumalux®	Ceramalux™
Multi-Vapor®	Metalarc®	Metal Halide
Protected High Output Multi-Vapor®	Metalarc® Pro-Tech™	—
PulseArc®	Super Metalarc® Pulse Start	Pulse Start

GE	OSRAM/SYLVANIA	PHILIPS
Standby Longlife Lucalox®	Lumalux® Standby	Instant Restrike Ceramalux™
Watt-Miser® Multi-Vapor®	Metalarc® Supersaver®	—

ATTENTION: This brand-name cross-reference chart is provided only as a quick reference. Other lamp company brand listings may only represent a near equivalent, versus an identical match to GE Lighting brands. Individual lamp manufacturers' performance specifications should be consulted. Lamp performance may be affected by environmental conditions, ballast type and/or other auxiliary equipment.

Headings in this catalog section

The following terms and descriptions can help you when checking High Intensity Discharge lamp specifications and when ordering products. Within each product line, lamps are divided into families. Within families, lamps are listed by wattage. In each of these wattage groups, lamps are listed by bulb shape.

Bulb Shape: Bulb shape followed by its size (the maximum diameter of the bulb expressed in eighths of an inch).

Base: The type of base.

LET (Lamp Enclosure Type): Describes fixture requirements for this lamp.

OP (Operating Position)

Energy Used – Nominal Watts: Energy Used (as defined by FTC Lamp Label Rules). To estimate energy consumption (kWh), multiply watts x hours of use and divide by 1000.

MOL (in): Maximum Overall Length in inches.

LCL (in): Distance between the center of the filament and the Light Center Length reference plane, in inches.

Order Code: It is important to use this five-digit code when ordering to ensure that you receive the exact product you require.

Description: The lamp's identification code.

ANSI Ballast Type: Ballast type used to operate lamp.

Case Qty: Number of product units packed in a case.

CBCP (Center Beam Candlepower): For reflector-type lamps. Center Beam Candlepower is the intensity (candelas) at the center or maximum intensity of the beam. Used only for ConstantColor® CMH® Metal Halide Lamps.

Rated Life (hours): Lamp burning hours to median life expectancy.

Initial Lumens: Initial light output.

Mean Lumens: Lamp light output (lumens) at 40% of rated lamp life for Metal Halide lamps and 50% of rated life for Mercury and HPS lamps.

Color Temperature Kelvins (K): A measure of the visual "warmth" or "coolness" of the light from the lamp. The higher the value the whiter or "cooler" the light appears.

Color Rendering Index (CRI): An indication of the ability of the lamp to render object colors in a normal, natural way. The higher the number (0-100), the better the color appearance.

Additional Information: Typical application and/or other important information.

Footnotes: See page 3-19.

Warning and Caution Notices: See page 3-21.

Bulb Shape	Base	LET	OP	Watts	MOL (in)	LCL (in)	Order Code	Description	ANSI Ballast Type	Case Qty	CBCP	Rated Life (hrs)	Initial Lumens	Mean Lumens	Color Temp K	CRI	Additional Information	Footnotes	Warning and Caution Notices
Constant Color CMH® Metal Halide Lamps																			
CMH® MR16																			
MR16	GX10	O	U	20	2.28		85101	CMH20MR16/830/SP	M156	12	9000	12000	1000		3000	81	12 Spotlight, UV control	33,39,51	107

CMH20MR16 / 830 / SP

- CMH20 — Identifies as CMH® lamp.
- MR16 — Identifies the lamp's wattage.
- 830 — Identifies the bulb shape.
- 830 — Color temp. and CRI.
- SP — Additional information.

WHEN YOU DON'T KNOW THE LAMP DESCRIPTION

1. Identify bulb shape by using illustrations on pages 3-2 to 3-4.
2. Measure bulb diameter using ruler in Appendix section page D-1 to determine width in eighths of an inch.
3. Identify base type using table on page 3-5.
4. Find your lamp in the tabular data containing the bulb shape, size and base, which are all listed by wattage.

Constant Color CMH® Metal Halide Lamps

Bulb Shape	Base	LET	OP	Watts	MOL (in)	LCL (in)	Order Code	Description	ANSI Ballast Type	Case Qty	CBCP	Rated Life (hrs)	Initial Lumens	Mean Lumens	Color Temp K	CRI	Additional Information	Reduced Watts/ High Color Rendering	Footnotes	Warning and Caution Notices
CMH® MR16 ULTRA																				
MR16	GX10	O	U	39	2.28		62292	CMH39MR16UL93/SP	C130/ M130	12	16000	16500	2200		3000	90	12 Spotlight, UV Control, Vertical +/-60 degrees; Electronic Ballast		33,39,51	107
		O	U	39	2.28		62293	CMH39MR16UL93/FL	C130/ M130	12	5500	16500	2200		3000	90	25 Spotlight, UV Control, Vertical +/-60 degrees; Electronic Ballast		33,39,51	107
		O	U	39	2.28		62294	CMH39MR16UL93WFL	C130/ M130	12	3000	16500	2200		3000	90	40 Spotlight, UV Control, Vertical +/-60 degrees; Electronic Ballast		33,39,51	107
CMH® MR16																				
MR16	GX10	O	U	20	2.28		85101	CMH20MR16/830/SP	C156/ M156	12	9000	12000	1000		3000	81	12 Spotlight, UV Control		33,39,51	107
		O	U	20	2.28		85110	CMH20MR16/830/FL	C156/ M156	12	2900	12000	1000		3000	81	25 Floodlight, UV Control		33,39,51	107
		O	U	20	2.28		97638	CMH20MR16/830WFL	C156/ M156	12	1500	12000	1000		3000	81	40 Wideflood, UV Control		33,39,51	107
		O	U	39	2.28		71488	CMH39MR16/930/SP	C130/ M130	12	16000	10000	2200		3000	90	12 Spotlight, UV Control		33,39,51	107
		O	U	39	2.28		71489	CMH39MR16/930/FL	C130/ M130	12	5500	10000	2200		3000	90	25 Floodlight, UV Control		33,39,51	107
		O	U	39	2.28		71490	CMH39MR16/930WFL	C130/ M130	12	3000	10000	2200		3000	90	40 Wideflood, UV Control		33,39,51	107
		O	U	39	2.28		71491	CMH39MR16/942/SP	C130/ M130	12	16000	12000	2200		4000	92	12 Spotlight, UV Control		33,39,51	107
		O	U	39	2.28		71492	CMH39MR16/942/FL	C130/ M130	12	5500	12000	2200		4000	92	25 Floodlight, UV Control		33,39,51	107
		O	U	39	2.28		71493	CMH39MR16/942WFL	C130/ M130	12	3000	12000	2200		4000	92	40 Wideflood, UV Control		33,39,51	107
CMH® PAR Integral Ballast																				
PAR38	E26	O	U	23	5.35		76224	CMHi23P38SP/ECO		6	28000	12000	1400		3000	81	10 Spotlight, UV Control		33,39	100
		O	U	23	5.35		76225	CMHi23P38FL/ECO		6	6000	12000	1400		3000	81	25 Floodlight, UV Control		33,39	100
		O	U	23	5.35		76226	CMHi23P38WFL/ECO		6	2800	12000	1400		3000	81	36 Wideflood, UV Control		33,39	100
CMH® PAR																				
PAR20	E26	O	U	20	3.60		29485	CMH20PAR20/SP	C156/ M156	15	13000	12000	1000		3000	81	8 Spotlight, UV Control		33,39,51	107
		O	U	20	3.60		29486	CMH20PAR20/FL	C156/ M156	15	3750	12000	1000		3000	81	25 Floodlight, UV Control		33,39,51	107
PAR30L	E26	O	U	20	4.75		29487	CMH20PAR30/SP10	C156/ M156	6	19800	12000	1200		3000	81	10 Spotlight, UV Control		33,39,51	107
		O	U	20	4.75		29488	CMH20PAR30/SP15	C156/ M156	6	14500	12000	1200		3000	81	15 Spotlight, UV Control		33,39,51	107
		O	U	20	4.75		29489	CMH20PAR30/FL25	C156/ M156	6	4900	12000	1200		3000	81	25 Floodlight, UV Control		33,39,51	107
PAR20	E26	O	U	39	3.60		42068	CMH39UPAR20FL25	C130/ M130	15	7500	10000	2100		3000	86	25 Floodlight, UV Control		33,39,45	107
		O	U	39	3.60		42069	CMH39UPAR20SP10	C130/ M130	15	22000	10000	2100		3000	86	10 Spotlight, UV Control		33,39,45	107
		O	U	39	3.60		96526	CMH39PAR20/NSP4K	C130/ M130	15	19450	10000	1950		4200	90	10 Spotlight, UV Control		33,39,45	107
		O	U	39	3.60		96527	CMH39PAR20/FL4K	C130/ M130	15	6950	10000	1950		4200	90	25 Floodlight, UV Control		33,39,45	107
PAR30L	E26	O	U	39	4.75		42066	CMH39PAR30L/SP15	C130/ M130	6	29000	10000	2400		3000	81	15 Spotlight, UV Control		33,39,45	107
		O	U	39	4.75		42067	CMH39PAR30L/FL25	C130/ M130	6	11000	10000	2400		3000	81	25 Floodlight, UV Control		33,39,45	107
		O	U	39	4.75		45066	CMH39/PAR30LSP10	C130/ M130	6	39600	10000	2400		3000	81	10 Spotlight, UV Control		33,39,45	107
		O	U	39	4.75		96528	CMH39PAR30LNSP4K	C130/ M130	6	36700	10000	2225		4200	89	10 Spotlight, UV Control		33,39,45	107
		O	U	39	4.75		96529	CMH39PAR30L/SP4K	C130/ M130	6	26900	10000	2225		4200	89	15 Spotlight, UV Control		33,39,45	107
		O	U	39	4.75		96530	CMH39PAR30L/FL4K	C130/ M130	6	10200	10000	2225		4200	89	25 Floodlight, UV Control		33,39,45	107
		O	U	70	4.75		22152	CMH70PAR30L830SP	C139/ M98	6	43000	13000	4700		3000	82	15 Spotlight, UV Control		33,39,45	107
		O	U	70	4.75		22159	CMH70PAR30L830FL	C139/ M98	6	10000	13000	4700		3000	82	40 Floodlight, UV Control		33,39,45	107

For the most up-to-date product information, see www.gelighting.com. To convert inches to millimeters, multiply by 25.4.
All footnotes, warning and caution notices found at the end of this section (page 3-19).

Bulb Shape	Base	LET	OP	Watts	MOL (in)	LCL (in)	Order Code	Description	ANSI Ballast Type	Case Qty	CBCP	Rated Life (hrs)	Initial Lumens	Mean Lumens	Color Temp K	CRI	Additional Information	Reduced Watts/ High Color Rendering	Footnotes	Warning and Caution Notices
Constant Color CMH® Metal Halide Lamps (continued)																				
CMH® PAR (continued)																				
PAR38	E26	O	U	70	5.31		45675	CMH70PAR38SP/ECO	C98/ M139/ M143/	6	40000	10000	4800		3000	82	15 Spotlight, UV Control		33,39	108
		O	U	70	5.31		45677	CMH70PAR38FL/ECO	C98/ M139/ M143/	6	14000	10000	4800		3000	82	25 Floodlight, UV Control		33,39	108
		O	U	70	5.31		45679	CMH70PAR38WF/ECO	C98/ M139/ M143/	6	4400	10000	4800		3000	82	60 Wide Floodlight, UV Control		33,39	108
		O	U	100	5.31		45680	CMH100PAR38SPECO	C90/ M90/ M140	6	45000	10000	6500		3000	81	15 Spotlight, UV Control		33,39	108
		O	U	100	5.31		45681	CMH100PAR38FLECO	C90/ M90/ M140	6	15000	10000	6500		3000	81	25 Floodlight, UV Control		33,39	108
		O	U	100	5.31		45682	CMH100PAR38WFECO	C90/ M90/ M140	6	5500	10000	6500		3000	81	60 Wide Floodlight, UV Control		33,39	108
CMH® Elliptical																				
BD17	E26	E	U	70	5.43	3.37	22119	CMH70/U/830/MED	M139/ M98/ C98	6		15000	6300	4100	3000	80	Clear		33	116
		E	U	70	5.43	3.37	22124	CMH70/C/U/830MED	M139/ M98/ C98	6		15000	6000	4000	3000	80	Coated		33	116
		E	U	100	5.43	3.37	22127	CMH100/U/830/MED	C90/ M90/ M140	6		10000 V 15000 H	9200	6600 V 6400 H	3000	83	Clear		33	116
		E	U	100	5.43	3.37	22137	CMH100/C/U830MED	C90/ M90/ M140	6		10000 V 15000 H	8700	6300	3000	83	Coated		33	116
CMH® Elliptical Open-Rated																				
ED17	E26	O	U	70	5.43	3.37	31069	CMH70U830MED/O	M143/ M98/ C98	6		15000	5700	4100	3000	80	Clear		33	106
		O	U	70	5.43	3.37	31070	CMH70CU830MED/O	M143/ M98/ C98	6		15000	5700	4100	3000	80	Coated		33	106
		O	U	70	5.43	3.37	31073	CMH70U942MED/O	M143/ M98/ C98	6		15000	5500	4200	4000	90	Clear		33	106
		O	U	70	5.43	3.37	31074	CMH70CU942MED/O	M143/ M98/ C98	6		15000	5200	4000	4000	90	Coated		33	106
	E26	O	U	150	5.43	3.37	31065	CMH150U830MED/O	C102/ M102/ M142	6		12000	12900	9500	3000	80	Clear		33	106
		O	U	150	5.43	3.37	31066	CMH150CU830MED/O	C102/ M102/ M142	6		12000	11900	8800	3000	80	Coated		33	106
		O	U	150	5.43	3.37	31067	CMH150U942MED/O	C102/ M102/ M142	6		15000	12000	9000	4200	90	Clear		33	106
		O	U	150	5.43	3.37	31068	CMH150CU942MED/O	C102/ M102/ M142	6		15000	11000	8300	4200	90	Coated		33	106
CMH® Single-Ended G12 ULTRA																				
T6	G12	E	U	39	3.56	2.18	79399	CMH39/930G12ULR	C130/ M130	12		16500	3600	3060	3000	87	UV Control, Vertical +/-60 degrees; Electronic Ballast		33,39,51	104
		E	U	70	3.56	2.18	73056	CMH70U930G12ULR	C139/ M139	12		18000	6400	5300	3000	87	UV Control		33,39,45	104

For the most up-to-date product information, see www.gelighting.com. To convert inches to millimeters, multiply by 25.4.
All footnotes, warning and caution notices found at the end of this section (page 3-19).

Bulb Shape	Base	LET	OP	Watts	MOL (in)	LCL (in)	Order Code	Description	ANSI Ballast Type	Case Qty	CBCP	Rated Life (hrs)	Initial Lumens	Mean Lumens	Color Temp K	CRI	Additional Information	Reduced Watts/ High Color Rendering	Footnotes	Warning and Caution Notices
Constant Color CMH® Metal Halide Lamps (continued)																				
CMH® Single-Ended G12																				
T4.5	G12	E	U	20	3.56	2.18	29703	CMH20T/U/830/G12	C156/ M156	12		12000	1600	1200	3000	81	UV Control		33,39,51	104
		E	U	39	3.56	2.18	20153	CMH39TUVCU830G12	C130/ M130	12		16500	3400	2300	3000	84	UV Control		33,39,45, 53	104
		E	U	39	3.56	2.18	29696	CMH39T/U/942/G12	C130/ M130	12		18000	3200	2600	4200	88	UV Control		33,39,45, 53	104
T6	G12	E	U	70	3.56	2.18	20016	CMH70TU/830/G12	C139/ M139	12		15000	6200	4700	3000	83	UV Control		33,39,45	104
		E	U	70	3.56	2.18	20023	CMH70TU/942/G12	C139/ M139	12		15000	6300	4700	4200	91	UV Control		33,39,45	104
		E	U	150	3.93	2.18	20017	CMH150TU/830/G12	C142/ M102	12		12000	14000	11000	3000	82	UV Control		33,39,45	104
		E	U	150	3.93	2.18	20018	CMH150TU/942/G12	C142/ M102	12		12000	13000	11000	4200	94	UV Control		33,39,45	104
CMH® Double-Ended TD																				
T6	Rx7s	E	H45	70	4.50	2.25	92587	CMH70/TD/830RX7S	M85/ M139	12		15000	7000	5600	3000	81	UV Control		33,39	109
		E	H45	70	4.50	2.25	92588	CMH70/TD/942RX7S	M85/ M139	12		15000	7000	5600	4200	88	UV Control		33,39	109
T7	Rx7s	E	H45	150	5.37	2.62	92589	CMH150TD830RX7S	M81/ M142	12		15000	14000	11500	3000	80	UV Control		33,39	109
		E	H45	150	5.37	2.62	92590	CMH150TD942RX7S	M81/ M142	12		15000	14000	11500	4200	93	UV Control		33,39	109
CMH® GU6.5 ULTRA																				
T4	GU6.5	E	U	39	2.05	1.18	62291	CMH39ULR930GU6.5	C130/ M130	12		16500	3500	2835	3000	87	UV Control, Vertical +/-60 degrees; Electronic Ballast		33,39,51	104
CMH® GU6.5																				
T4	GU6.5	E	U	20	2.05	1.18	85086	CMH20T/U830GU6.5	C156/ M156	12		12000	1615	1066	3000	81	UV Control		33,39,51	104
		E	U	39	2.05	1.18	71484	CMH39T/U930GU6.5	C130/ M130	12		10000	3400	2300	3000	88	UV Control		33,39,51	104
		E	U	39	2.05	1.18	71487	CMH39T/U942GU6.5	C130/ M130	12		12000	3400	2600	4000	90	UV Control		33,39,51	104
CMH® Mini ULTRA																				
T4.5	G8.5	E	U	39	3.37	2	79400	CMH39/930G8.5ULR	C130/ M130	12		16500	3600	3060	3000	87	UV Control, Vertical +/-60 degrees; Electronic Ballast		33,39,51	104
		E	U	70	3.37	2.00	73057	CMH70U930G8.5ULR	C139/ M139	12		18000	6200	5140	3000	88	UV Control		33,39,45	104
CMH® Mini's																				
T4.5	G8.5	E	U	20	3.37	2.00	92696	CMH20TCU830/G8.5	C156/ M156	12		12000	1650	1090	3000	81	UV Control		33,39,51	104
		E	U	39	3.37	2.00	90352	CMH39TCU830/G8.5	C130/ M130	12		16500	3400	2300	3000	84	UV Control		33,39,45, 53	104
		E	U	39	3.37	2.00	29698	CMH39TCU942/G8.5	C130/ M130	12		18000	3200	2600	4200	88	UV Control		33,39,45, 53	104
		E	U	70	3.37	2.00	92585	CMH70TCU830G8.5	C139/ M139	12		15000	6200	4400	3000	83	UV Control		33,39,45	104
		E	U	70	3.37	2.00	29701	CMH70TCU942/G8.5	C139/ M139	12		15000	6200	4600	4200	90	UV Control		33,39,45	104
CMH® Chromafit™																				
T15	E39	E	U	250	9.75	5.75	93357	CMH250/U/830/R	S50/ M168	12		24000	25000	20000	3000	85			33	105
ED18	E39	E	U	400	9.75	5.75	93295	CMH400/U/830/R	S51/ M169	12		20000	41000	31300	3000H 3600V	82H 80V			33,45,49	105
High-Watt CMH® SPXX																				
ED28	EX39	O	V	250	8.31	5.00	48429	CMH250/V/PA/O		12		20000	23000	18400	4100	90	Clear		33,45,52	106
		O	V	250	8.31	5.00	48432	CMH250C/V/PA/O		12		20000	22000	17600	4100	90	Coated		33,45,52	106
ED37	EX39	O	V	320	11.31	7.00	17264	CMH320/V/PA/O		6		20000	31000	24800	4100	90	Clear		33,45,52	106
		O	V	320	11.31	7.00	17267	CMH320C/V/PA/O		6		20000	30000	24000	4100	90	Coated		33,45,52	106
		O	V	350	11.31	7.00	20035	CMH350/V/PA/O		6		20000	33000	26400	4000	90	Clear		33,45,52	106
		O	V	350	11.31	7.00	20036	CMH350C/V/PA/O		6		20000	32000	25600	4000	90	Coated		33,45,52	106
		O	V	400	11.31	7	17259	CMH400/V/PA/O		6		20000	37000	29600	4200	90	Clear		33,45,52	106
		O	V	400	11.31	7	17260	CMH400/C/V/PA/O		6		20000	36000	28800	4200	90	Coated		33,45,52	106

High Intensity Discharge Lamps

Bulb Shape	Base	LET	OP	Watts	MOL (in)	LCL (in)	Order Code	Description	ANSI Ballast Type	Case Qty	CBCP	Rated Life (hrs)	Initial Lumens	Mean Lumens	Color Temp K	CRI	Additional Information	Reduced Watts/ High Color Rendering	Footnotes	Warning and Caution Notices
PulseArc® Multi-Vapor® Metal Halide Lamps																				
50 Watts																				
BD17	E26	E	U	50	5.43	3.43	10361	MXR50/U/MED	M110	6		10000	3200	2100	3700	60	Clear			118
		E	U	50	5.43	3.43	10364	MXR50/C/U/MED	M110	6		10000	3000	2000	3400	65	Coated			118
70 Watts																				
BD17	E26	E	U	70	5.43	3.43	22158	MXR70/U/MED	M98	6		12000	5500	3500	3500	55	Clear			118
		E	U	70	5.43	3.43	22162	MXR70/C/U/MED	M98	6		12000	5300	3300	3200	55	Coated			118
		E	U	70	5.43	3.43	12590	MVR70/U/MED	M98	6		12000	5500	3000	4000	65	Clear			118
		E	U	70	5.43	3.43	12594	MVR70/C/U/MED	M98	6		12000	5250	2800	4000	65	Coated			118
100 Watts																				
BD17	E26	E	U	100	5.43	3.43	18680	MXR100/U/MED	M90	6		15000	9000	6200	3200	65	Clear			118
		E	U	100	5.43	3.43	18679	MXR100/C/U/MED	M90	6		15000	8500	5900	3200	65	Coated			118
		E	U	100	5.43	3.43	12652	MVR100/U/MED	M90	6		15000	9500	5800	4000	70	Clear			118
		E	U	100	5.43	3.43	12653	MVR100/C/U/MED	M90	6		15000	8800	4900	4000	70	Coated			118
150 Watts																				
BD17	E26	E	U	150	5.43	3.43	22935	MXR150/U/MED	M102	6		15000	13300	10000	3400	60	Clear			118
		E	U	150	5.43	3.43	22936	MXR150/C/U/MED	M102	6		15000	12600	9500	3100	60	Coated			118
		E	U	150	5.43	3.43	12598	MVR150/U/MED	M102	6		15000	14000	10500	4300	65	Clear			118
		E	U	150	5.43	3.43	12604	MVR150/C/U/MED	M102	6		15000	13300	10000	3900	70	Coated			118
175 Watts																				
ED23.5	E39	E	VBU	175	7.50	5.00	11185	MXR175/C/VBU/PA	M137/ M152	6		15000	16000	12000	3200	65	Coated		43	117
		E	VBU	175	7.50	5.00	12622	MVR175/VBU/PA	M137/ M152	6		15000	17500	13000	4000	70	Clear		43	117
		E	VBU	175	7.50	5.00	12633	MVR175/C/VBU/PA	M137/ M152	6		15000	16500	12500	4000	70	Coated		43	117
BD17	E26	E	VBU	175	5.75	3.43	12636	MVR175/VBU/MEDPA	M137/ M152	6		15000	17500	13000	4000	70	Clear		43	117
		E	VBU	175	5.75	3.43	12637	MVR175/CVBUMEDPA	M137/ M152	6		15000	16500	12500	4000	70	Coated		43	117
250 Watts																				
ED28	E39	E	U	250	8.25	5.00	78665	MVR250/U/PA	M138/ M153	12		12000H/ 15000V	18600H/ 22400V	12000H/ 14000V	3900	60	Clear		43	116
		E	VBU	250	8.25	5.00	26317	MVR250/VBU/PA	M138/ M153	12		15000	23000	17000	4200	55	Clear		43	116
		E	VBU	250	8.25	5.00	26319	MVR250/C/VBU/PA	M138/ M153	12		15000	21500	15500	3900	55	Coated		43	116
		E	HOR	250	8.25	5.00	72882	MVR250/HOR/PA	M138/ M153	12		12000	20000	13700	4400	60	Clear		43	117
320 Watts																				
ED28	E39	E	VBU	320	8.25	5.00	27501	MVR320/VBU/HO/PA	M132/ M154	12		20000	31000	18000	4000	60	Clear		43	117
		E	VBU	320	8.25	5.00	27502	MVR320/C/VBUHOPA	M132/ M154	12		20000	30000	16500	3700	60	Coated		43	117
		E	VBU	320	8.25	5.00	45666	MVR320VBU/XHO/PA	M132/ M154	12		20000	34000	25000	4000	65	Extra High Output		43	116
		E	VBU	320	8.25	5.00	45669	MVR320/C/VBU/ XHO/PA	M132/ M154	12		20000	33000	23000	3700	70	Extra High Output		43	116
		E	HOR	320	8.25	5.00	72884	MVR320/HOR/PA	M132/ M154	12		20000	30000	19100	4100	65	Clear		43	117
350 Watts																				
ED37	E39	E	VBU	350	11.50	7.00	23729	MVR350VBUXHOPA/E	M131	6		20000	36500	27000	4000	60	Extra High Output		43	117
		E	VBU	350	11.50	7.00	23738	MVR350CVBUXHOPAE	M131	6		20000	34500	25000	3700	60	Extra High Output		43	117
400 Watts																				
ED37	E39	E	U	400	11.50	7.00	78666	MVR400/U/PA	M135/ M155	6		15000H/ 20000V	31200H/ 39400V	18000H/ 22000V	4000	60	Clear		43	116
		S	VBU	400	11.50	7.00	45664	MVR400/VBU/HO/PA	M135/ M155	6		20000	41000	31000	4000	60	Clear		49	121
		S	VBU	400	11.50	7.00	12642	MVR400/VBU/XHOPA	M135/ M155	6		20000	44000	33000	4000	55	Extra High Output		49	121
		S	VBU	400	11.50	7.00	12644	MVR400/CVBUXHOPA	M135/ M155	6		20000	42000	31500	3700	55	Coated, Extra High Output		49	121
		E	HOR	400	11.50	7.00	72886	MVR400/HOR/PA	M135/ M155	6		20000	40000	22300	4100	65	Clear		43,49	117
		E	VBD	400	11.50	7.00	46632	MVR400VBD/XHO/PA	M135/ M155	6		20000	44000	35200	4000	65	Extra High Output		43,49	116

For the most up-to-date product information, see www.gelighting.com. To convert inches to millimeters, multiply by 25.4.
All footnotes, warning and caution notices found at the end of this section (page 3-19).

Bulb Shape	Base	LET	OP	Watts	MOL (in)	LCL (in)	Order Code	Description	ANSI Ballast Type	Case Qty	CBCP	Rated Life (hrs)	Initial Lumens	Mean Lumens	Color Temp K	CRI	Additional Information	Reduced Watts/ High Color Rendering	Footnotes	Warning and Caution Notices
PulseArc® Multi-Vapor® Metal Halide Lamps (continued)																				
ED28	E39	E	VBU	400	8.25	5.00	46271	MVR400/VBUED28PA	M135/ M155	12		20000	44000	28500	4000	65	Clear		43,49	116
		E	VBU	400	8.25	5.00	46272	MVR400CVBUED28PA	M135/ M155	12		20000	42000	27500	3700	70	Coated Compact		43,49	116
		E	HOR	400	8.25	5.00	72885	MVR400/HOR/ED28/PA	M135/ M155	12		20000	38000	21400	4100	65	Clear Compact		43,49	117
750 Watts																				
BT37	E39	E	VBU	750	11.50	7.00	27219	MVR750/VBU/PA	M149	6		16000	82000	60000	4000	65	Clear		49	117
		E	VBU	750	11.50	7.00	45560	MVR750/C/VBU/PA	M149	6		16000	72000	54000	3700	70	Coated		49	117
1000 Watts																				
BT37	E39	E	U	1000	11.50	7.00	10389	MVR1000U/BT37/PA	M141	6		9000H/ 12000V	105000H/ 115000V	82000H/ 90000V	3900	65	Clear		43,49	116
Multi-Vapor® Metal Halide Lamps																				
150 Watts																				
ED28	E39	E	U	150	8.25	5.00	13481	MVR150/U/WM	M57/ M107	12		7500H/ 10000V	11500H/ 13500V	7200H/ 8500V	4000	65	Clear, Watt-Miser®	✓		117
		E	U	150	8.25	5.00	13490	MVR150/C/U/WM	M57/ M107	12		7500H/ 10000V	10900H/ 12800V	6900H/ 8000V	3700	70	Coated, Watt-Miser®	✓		117
175 Watts																				
BD17	E26	E	U	175	5.75	3.43	18902	MVR175/U/MED	M57	6		6000H/ 10000V	11700H/ 14000V	7400H/ 8800V	4000	60	Clear			117
		E	U	175	5.75	3.43	26432	MVR175/U/MED/CP	M57	4		6000H/ 10000V	11700H/ 13600V	7400H/ 8800V	4000	65	Clear, Consumer Pack			117
		E	U	175	5.75	3.43	19976	MVR175/C/U/MED	M57	6		6000H/ 10000V	11900H/ 12900V	7900H/ 8400V	3900	60	Coated			117
ED28	E39	E	U	175	8.25	5.00	47760	MVR175/U	M57	12		6000H/ 10000V	11700H/ 13600V	7900H/ 8800V	4000	55	Clear			117
		E	U	175	8.25	5.00	26433	MVR175/U/CP	M57	4		6000H/ 10000V	11700H/ 13600V	7900H/ 8800V	4000	65	Clear, Consumer Pack			117
		E	U	175	8.25	5.00	47761	MVR175/C/U	M57	12		6000H/ 10000V	11900H/ 12900V	7900H/ 8400V	3900	55	Coated			117
		E	U	175	8.25	5.00	17634	MVR175/SP30/U	M57	12		6000H/ 10000V	10300H/ 12000V	6500H/ 7600V	3000	70	RE730 Phosphor Coating			117
PAR38	E26	E	U	175	5.62		25218	MVR175/PAR38/FL1	M57	6	6500	7500	12000		3800	65	Clear, One-Piece PAR			117
250 Watts																				
ED28	E39	E	U	250	8.25	5.00	42729	MVR250/U	M58	12		6000H/ 10000V	19100H/ 20800V	12400H/ 13500V	4200	60	Clear			117
		E	U	250	8.25	5.00	26434	MVR250/U/CP	M58	4		6000H/ 10000V	19100H/ 20800V	12400H/ 13500V	4200	65	Clear, Consumer Pack			117
		E	U	250	8.25	5.00	42731	MVR250/C/U	M58	12		6000H/ 10000V	18200H/ 19800V	11600H/ 13000V	3900	60	Coated			117
		E	U	250	8.25	5.00	17633	MVR250/SP30/U	M58	12		6000H/ 10000V	16600H/ 18000V	10600H/ 11500V	3000	70	RE730 Phosphor Coating			117
360 Watts																				
ED37	E39	S	U	360	11.50	7.00	13495	MVR360/U/WM/HO	M59/ M165	6		20000	36000	20000	4300	60	Clear, Watt-Miser®	✓	32,49	121
400 Watts																				
ED37	E39	S	U	400	11.50	7.00	43828	MVR400/U	M59	6		15000H/ 20000V	33100H/ 38000V	22100H/ 23500V	4000	60	Clear		49	121
		S	U	400	11.50	7.00	26435	MVR400/U/CP	M59	4		15000H/ 20000V	33100H/ 36000V	22100H/ 23500V	4000	65	Clear, Consumer Pack		49	121
		S	U	400	11.50	7.00	43829	MVR400/C/U	M59	6		15000H/ 20000V	32200H/ 36000V	19300H/ 23000V	3700	60	Coated		49	121
		S	U	400	11.50	7.00	17632	MVR400/SP30/U	M59	6		15000H/ 20000V	28500H/ 31000V	17100H/ 18600V	3000	70	RE730 Phosphor Coating		49	121
ED28	E39	E	U	400	8.25	5.00	18904	MVR400/U/ED28	M59	12		15000H/ 20000V	33100H/ 38000V	22100H/ 23500V	4000	60	Clear, Compact		49	117
		E	U	400	8.25	5.00	19979	MVR400/C/U/ED28	M59	12		15000H/ 20000V	32200H/ 36000V	19300H/ 23000V	4000	60	Coated, Compact		49	117
1000 Watts																				
BT56	E39	S	U	1000	15.37	9.50	41826	MVR1000/U	M47	6		11000H/ 15000V	100280H/ 108000V	79000H/ 86000V	4000	65	Clear		49	121
		S	U	1000	15.37	9.50	41827	MVR1000/C/U	M47	6		11000H/ 15000V	96600H/ 105000V	73000H/ 80000V	3700	65	Coated		49	121
BT37	E39	E	U	1000	11.50	7.00	18205	MVR1000/U/BT37	M47	6		9000H/ 12000V	105000H/ 115000V	82000H/ 90000V	3700	65	Clear, Compact		49	121
High Output and XHO Multi-Vapor® Metal Halide Lamps																				
175 Watts																				
ED28	PosMog	E	HOR	175	8.25	5.00	18105	MVR175/C/HOR	M57	12		10000	14100	7500	3500	70	Coated, Position Oriented Socket			117

For the most up-to-date product information, see www.gelighting.com. To convert inches to millimeters, multiply by 25.4.
All footnotes, warning and caution notices found at the end of this section (page 3-19).

Bulb Shape	Base	LET	OP	Watts	MOL (in)	LCL (in)	Order Code	Description	ANSI Ballast Type	Case Qty	CBCP	Rated Life (hrs)	Initial Lumens	Mean Lumens	Color Temp K	CRI	Additional Information	Reduced Watts/ High Color Rendering	Footnotes	Warning and Caution Notices
High Output and XHO Multi-Vapor® Metal Halide Lamps (continued)																				
250 Watts																				
ED28	PosMog	E	HOR	250	8.25	5.00	18101	MVR250/HOR	M58	12		15000	21000	10000	4200	65	Clear, Position Oriented Socket			117
		E	HOR	250	8.25	5.00	18103	MVR250/C/HOR	M58	12		15000	19700	9400	4000	65	Coated, Position Oriented Socket			117
360 Watts - Watt-Miser® Energy-Saving Replacement for 400W Metal Halide																				
ED37	E39	S	VBU	360	11.50	7.00	40053	MVR360VBU/WM/XHO	M59	6		20000	37000	24000	4200	60	Extra High Output	✓	32,49	121
		S	VBU	360	11.50	7.00	40055	MVR360C/ VBUWMXHO	M59	6		20000	35000	23000	4000	60	Extra High Output	✓	32,49	121
400 Watts																				
ED37	E39	S	VBU	400	11.50	7.00	49657	MVR400/VBU/HO	M59	6		20000	41000	26500	4000	60	High Output		49	121
		S	VBU	400	11.50	7.00	20931	MVR400SP30VBU/HO	M59	6		20000	34000	20400	3200	70	RE730 Phosphor Coating		49	121
		S	VBU	400	11.50	7.00	13923	MVR400/VBU/XHO	M59	6		20000	43000	28000	4000	55	Extra High Output		49	121
		S	VBU	400	11.50	7.00	13924	MVR400/C/VBU/XHO	M59	6		20000	42000	27000	3700	55	Extra High Output		49	121
ED28	E39	E	VBU	400	8.31	5.00	40335	MVR400/VBUED28HO	M59	12		20000	41000	26500	4000	60	Clear, Compact		49	121
BT28	E39	E	HOR	400	8.25	5.00	40201	MVR400/HOR/BT28	M59	12		20000	37000	22000	4200	65	Compact, Horizontal		49	117
BT37	E39	E	HOR	400	11.50	7.00	26218	MVR400/HOR/MOG	M59	6		20000	38000	22500	4200	65	Clear		49	117
		E	HOR	400	11.50	7.00	26219	MVR400/C/HOR/MOG	M59	6		20000	36800	22000	3900	70	Coated		49	117
1000 Watts																				
BT56	E39	S	VBU	1000	15.37	9.50	44835	MVR1000/VBU/HO	M47	6		15000	111000	87000	3800	65	Clear		49	121
Sports Lighting																				
1000 Watts																				
PAR64	G38	E	U	1000	6.87		88514	SPL1000/PAR64840	HID	1	1,350,000	3500	63000		4000	80	Clear, Narrow Spot		38	124
		E	U	1000	6.87		88513	SPL1000/PAR64/HR	HID	1	1,350,000	3500	63000		4000	80	Clear, Narrow Spot		38	124
1500 Watts																				
T7	Rx7s	E	H	1500	10.12	5.00	16920	SPL1500/H/652	HID	1		6000	120000	90000	5200	65	Frosted		38	125
BT56	E39	E	U	1500	15.37	9.50	47326	MVR1500/U/SPORTS	M48	6		3000	162000H/ 170000V	137000H/ 153000V	4000	65	Clear		17,42,49	117
1650 Watts																				
BT56	PosMog	E	HOR	1650	15.37	9.50	25532	MVR1650/HOR	M112	6		3000	177000	145000	3200	65	Clear, Position Oriented Socket		17,49	117
Protected Multi-Vapor® Metal Halide Lamps																				
50 Watts																				
ED17	E26	O	U	50	5.43	3.43	45670	MXR50/U/MED/O	M110	6		10000	3200	1700	3500	70	Clear, Protected			120
		O	U	50	5.43	3.43	45671	MXR50/C/U/MED/O	M110	6		10000	3200	1500	3500	70	Coated, Protected			120
70 Watts																				
ED17	E26	O	U	70	5.43	3.43	12377	MXR70/U/MED/O	M98	6		15000	5500	3500	3200	70	Clear, Protected			120
		O	U	70	5.43	3.43	12577	MXR70/C/U/MED/O	M98	6		15000	4900	3300	3200	70	Coated, Protected			120
100 Watts																				
ED17	E26	O	U	100	5.43	3.43	12381	MXR100/U/MED/O	M90	6		15000	9000	6200	3200	70	Clear, Protected			120
		O	U	100	5.43	3.43	12579	MXR100/C/U/MED/O	M90	6		15000	8500	5900	3200	70	Coated, Protected			120
150 Watts																				
ED17	E26	O	U	150	5.43	3.43	45683	MXR150/U/MED/O	M102	6		15000	12500	8600	3500	70	Clear, Protected			120
		O	U	150	5.43	3.43	45688	MXR150/C/U/MED/O	M102	6		15000	12000	8300	3500	70	Coated, Protected			120
175 Watts																				
ED28	EX39	O	VBU	175	8.25	5.00	49470	MPR175/VBU/O	M57	6		10000	15700	8400	4000	65	Clear, Protected, UV Control			119
		O	VBU	175	8.25	5.00	11649	MPR175/C/VBU/O	M57	6		10000	14300	7700	3800	70	Coated, Protected, UV Control			119
		O	VBU	175	8.25	5.00	61325	MPR175/VBU/PA/O	M137, M152	6		15000	16000	11000	3900	65	Clear, Protected, UV Control			120
250 Watts																				
ED28	EX39	O	VBU	250	8.25	5.00	49471	MPR250/VBU/O	M58	6		10000	21300	14200	4000	65	Clear, Protected, UV Control			119
		O	VBU	250	8.25	5.00	11650	MPR250/C/VBU/O	M58	6		10000	19500	12900	3800	70	Coated, Protected, UV Control			119
		O	VBU	250	8.25	5.00	61326	MPR250/VBU/PA/O	M138, M153	6		15000	23000	16600	3800	75	Clear, Protected, UV Control			120

For the most up-to-date product information, see www.gelighting.com. To convert inches to millimeters, multiply by 25.4.
All footnotes, warning and caution notices found at the end of this section (page 3-19).

Bulb Shape	Base	LET	OP	Watts	MOL (in)	LCL (in)	Order Code	Description	ANSI Ballast Type	Case Qty	CBCP	Rated Life (hrs)	Initial Lumens	Mean Lumens	Color Temp K	CRI	Additional Information	Reduced Watts/ High Color Rendering	Footnotes	Warning and Caution Notices
Protected Multi-Vapor® Metal Halide Lamps (continued)																				
320 Watts																				
ED37	EX39	O	VBU	320	11.50	7.00	46275	MPR320/VBU/XHOPA	M132/ M154	6		20000	32000	22500	4000	65	Clear, Protected, UV Control, Extra High Output			120
		O	VBU	320	11.50	7.00	46276	MPR320C/VBUXHOPA	M132/ M154	6		20000	30500	21500	3700	70	Coated, Protected, UV Control, Extra High Output			120
ED28	EX39	O	VBU	320	8.25	5.00	19609	MPR320/C/PA/ED28	M132/ M154	12		20000	30600	22500	3700	70	Coated, Protected, UV Control		43	120
350 Watts																				
ED37	EX39	O	VBU	350	11.50	7.00	10202	MPR350/VBU/PA	M131	6		20000	35200	24600	3700	65	Clear, Protected, UV Control		43	120
		O	VBU	350	11.50	7.00	48824	MPR350/C/VBU/PA	M131	6		20000	33400	26500	3700	70	Coated, Protected, UV Control		43	120
		O	VBU	350	11.50	7.00	48825	MPR350C/VBU3K/PA	M131	6		20000	33400	23500	3200	70	Coated, Protected, UV Control		43	120
360 Watts - Watt-Miser® Energy-Saving Replacement for 400W Metal Halide																				
ED37	EX39	O	VBU	360	11.50	7.00	40056	MPR360VBUWM/HO/O	M59/ M165	6		20000	36000	23500	4000	60	Clear, Protected		32,49	119
		O	VBU	360	11.50	7.00	11685	MPR360CVBUWMHO/O	M59/ M165	6		20000	35000	22500	3700	60	Coated, Protected		32,49	119
400 Watts																				
ED37	EX39	O	VBU	400	11.50	7.00	18708	MPR400/VBU/HO/O	M59	6		20000	40000	26000	3400	65	Clear, Protected		49	119
		O	VBU	400	11.50	7.00	13582	MPR400C/VBU/HO/O	M59	6		20000	38000	25000	3200	65	Coated, Protected		49	119
		O	VBU	400	11.50	7.00	46273	MPR400/VBU/XHOPA	M135/ M155	6		20000	42000	29500	4000	65	Clear, Protected, UV Control, Extra High Output		43,49	120
		O	VBU	400	11.50	7.00	46274	MPR400C/VBUXHOPA	M135/ M155	6		20000	40000	28000	3700	70	Coated, Protected, UV Control, Extra High Output		43,49	120
1000 Watts																				
BT56	EX39	O	VBU	1000	15.37	9.50	41433	MPR1000/VBU/HO/O	M47	6		12000	110000	88500	3500	65	Clear, Protected		49	119
Chromafit™ Multi-Vapor® Metal Halide Lamps (HPS Retrofit Lamps)																				
250 Watts																				
ED28	E39	E	VBU	250	8.25	5.75	12762	MVR250/VBU/R	S50	12		10000	18500	13900	4500	65	Clear, HPS Retrofit		50	116
		E	VBU	250	8.25	5.75	12769	MVR250/C/VBU/R	S50	12		10000	18000	13000	4000	70	Coated, HPS Retrofit		50	116
400 Watts																				
ED28	E39	E	U	400	8.31	5.00	26851	MVR400/U/ED28/R	S51	12		15000H/ 20000V	33100H/ 36000V	20200H/ 22000V	4000	65	Clear, Compact, HPS Retrofit,		49,50	116
ED37	E39	S	VBU	400	11.50	5.75	12770	MVR400/VBU/R	S51	6		20000	37600	22600	4500	65	Clear, HPS Retrofit		49,50	122
		S	VBU	400	11.50	5.75	12772	MVR400/C/VBU/R	S51	6		20000	35700	21400	4000	70	Coated, HPS Retrofit		49,50	122
Lucalox® High Pressure Sodium Lamps																				
150 Watts																				
ED28	E39	O	U	150	8.31	5.00	44243	LU150/100(ED28)	S56	12		24000+	15000	13500	2000	22	Clear, 100V			111
600 Watts																				
T15	E39	O	U	600	11.06	6.62	27187	LU600/T	S106	12		24000	90000	81000	2000	22	Clear			111
750 Watts																				
ED37	E39	O	U	750	11.50	6.75	14682	LU750	S111	6		24000+	110000	99000	2100	22	Clear			111
Ecolux® High Pressure Sodium Lamps (TCLP Compliant)																				
35 Watts																				
B17	E26	O	U	35	5.43	3.43	11668	LU35/MED/ECO	S76	6		16000	2250	2025	1900	22	TCLP Compliant			111
		O	U	35	5.43	3.43	26420	LU35/MED/CP	S76	4		16000	2250	2025	1900	22	TCLP Compliant, Consumer Pack			111
50 Watts																				
B17	E26	O	U	50	5.43	3.43	11345	LU50/MED/ECO	S68	6		24000+	4000	3600	1900	22	TCLP Compliant			111
		O	U	50	5.43	3.43	26421	LU50/MED/CP	S68	4		24000+	4000	3600	1900	22	TCLP Compliant, Consumer Pack			111
B17	E26	O	U	50	5.43	3.43	11347	LU50/D/MED/ECO	S68	6		24000+	3800	3420	1900	22	TCLP Compliant, Diffuse			111
ED23.5	E39	O	U	50	7.75	5.00	44975	LU50/H/ECO	S68	12		24000+	4000	3600	1900	22	TCLP Compliant			111
		O	U	50	7.75	5.00	45006	LU50/D/H/E/CO	S68	12		24000+	3800	3420	1900	22	TCLP Compliant, Diffuse			111

For the most up-to-date product information, see www.gelighting.com. To convert inches to millimeters, multiply by 25.4.
All footnotes, warning and caution notices found at the end of this section (page 3-19).

Bulb Shape	Base	LET	OP	Watts	MOL (in)	LCL (in)	Order Code	Description	ANSI Ballast Type	Case Qty	CBCP	Rated Life (hrs)	Initial Lumens	Mean Lumens	Color Temp K	CRI	Additional Information	Reduced Watts/ High Color Rendering	Footnotes	Warning and Caution Notices
Ecolux® High Pressure Sodium Lamps (TCLP Compliant) (continued)																				
70 Watts																				
B17	E26	O	U	70	5.43	3.43	11339	LU70/MED/ECO	S62	6		24000+	6400	5450	1900	22	TCLP Compliant			111
		O	U	70	5.43	3.43	26422	LU70/MED/CP	S62	4		24000+	6400	5450	1900	22	TCLP Compliant, Consumer Pack			111
		O	U	70	5.43	3.43	11340	LU70/D/MED/ECO	S62	6		24000+	5950	5050	1900	22	TCLP Compliant, Diffuse			111
ED23.5	E39	O	U	70	7.75	5.00	85368	LU70/H/ECO	S62	12		24000+	6400	5450	1900	22	TCLP Compliant			111
		O	U	70	7.75	5.00	26426	LU70/CP	S62	4		24000+	6400	5450	1900	22	TCLP Compliant, Consumer Pack			111
		O	U	70	7.75	5.00	72605	LU70/D/H/ECO	S62	12		24000+	5950	5050	1900	22	TCLP Compliant, Diffuse			111
100 Watts																				
B17	E26	O	U	100	5.50	3.43	13250	LU100/MED/ECO	S54	6		24000+	9500	8550	2000	22	TCLP Compliant			111
		O	U	100	5.50	3.43	26423	LU100/MED/CP	S54	4		24000+	9500	8550	2000	22	TCLP Compliant, Consumer Pack			111
		O	U	100	5.50	3.43	13251	LU100/D/MED/ECO	S54	6		24000+	8800	7920	2000	22	TCLP Compliant, Diffuse			111
ED23.5	E39	O	U	100	7.75	5.00	85369	LU100/H/ECO	S54	12		24000+	9500	8550	2000	22	TCLP Compliant			111
		O	U	100	7.75	5.00	26427	LU100/CP	S54	4		24000+	9500	8550	2000	22	TCLP Compliant, Consumer Pack			111
		O	U	100	7.75	5.00	72606	LU100/D/H/ECO	S54	12		24000+	8800	7920	2000	22	TCLP Compliant, Diffuse			111
150 Watts																				
B17	E26	O	U	150	5.75	3.50	13252	LU150/MED/ECO	S55	6		24000+	16000	14400	2000	22	TCLP Compliant			111
		O	U	150	5.75	3.50	26424	LU150/MED/CP	S55	4		24000+	16000	14400	2000	22	TCLP Compliant, Consumer Pack			111
		O	U	150	5.75	3.50	13253	LU150/D/MED/ECO	S55	6		24000+	15000	13500	2000	22	TCLP Compliant, Diffuse			111
ED23.5	E39	O	U	150	7.75	5.00	85371	LU150/55/H/ECO	S55	12		24000+	16000	14400	2000	22	TCLP Compliant			111
		O	U	150	7.75	5.00	26429	LU150/55/CP	S55	4		24000+	16000	14400	2000	22	TCLP Compliant, Consumer Pack			111
		O	U	150	7.75	5.00	85380	LU150/55/D/H/ECO	S55	12		24000+	15000	13500	2000	22	TCLP Compliant, Diffuse			111
200 Watts																				
ED18	E39	O	U	200	9.75	5.75	85372	LU200/H/ECO	S66	12		24000+	22000	19800	2100	22	TCLP Compliant			111
250 Watts																				
ED18	E39	O	U	250	9.75	5.75	85377	LU250/H/ECO	S50	12		24000+	28000	25200	2100	22	TCLP Compliant			111
ED18	E39	O	U	250	9.75	5.75	26430	LU250/CP	S50	4		24000+	28000	25200	2100	22	Clear, Consumer Pack			111
ED28	E39	O	U	250	9.00	5.00	85381	LU250/D/H/ECO	S50	12		24000+	26000	23400	2100	22	TCLP Compliant, Diffuse			111
310 Watts																				
ED18	E39	O	U	310	9.75	5.75	76996	LU310/H/ECO	S67	12		24000+	37000	33300	2100	22	TCLP Compliant			111
400 Watts																				
ED18	E39	O	U	400	9.75	5.75	85379	LU400/H/ECO	S51	12		24000+	51000	45000	2100	22	TCLP Compliant			111
ED18	E39	O	U	400	9.75	5.75	26431	LU400/CP	S51	4		24000+	51000	45000	2100	22	Clear, Consumer Pack			111
ED37	E39	O	U	400	11.31	7.00	76998	LU400/D/H/ECO	S51	6		24000+	47500	42750	2100	22	TCLP Compliant, Diffuse			111
1000 Watts																				
E25	E39	O	U	1000	15.06	8.75	44058	LU1000/ECO	S52	6		24000+	130000	117000	2100	22	TCLP Compliant		49	111
Ecolux® Standby Longlife Lucalox® Lamps (TCLP Compliant)																				
70 Watts																				
ED23.5	E39	O	U	70	7.75	5.00	61367	LU70/SBY/XL/ECO	S62	12		40000	6400	5050	2000	22	Clear, Standby Longlife, Dual Arc Tube, TCLP Compliant			111
100 Watts																				
ED23.5	E39	O	U	100	7.75	5.00	61368	LU100/SBY/XL/ECO	S54	12		40000	9500	8190	2000	22	Clear, Standby Longlife, Dual Arc Tube, TCLP Compliant			111
150 Watts																				
ED23.5	E39	O	U	150	7.75	5.00	61369	LU150/55SBYXLECO	S55	12		40000	16000	14000	2000	22	Clear, Standby Longlife, Dual Arc Tube, TCLP Compliant			111
200 Watts																				
ED18	E39	O	U	200	9.75	5.75	61370	LU200/SBY/XL/ECO	S66	12		40000	21500	18150	2000	22	Clear, Standby Longlife, Dual Arc Tube, TCLP Compliant			111

For the most up-to-date product information, see www.gelighting.com. To convert inches to millimeters, multiply by 25.4.
All footnotes, warning and caution notices found at the end of this section (page 3-19).

Bulb Shape	Base	LET	OP	Watts	MOL (in)	LCL (in)	Order Code	Description	ANSI Ballast Type	Case Qty	CBCP	Rated Life (hrs)	Initial Lumens	Mean Lumens	Color Temp K	CRI	Additional Information	Reduced Watts/ High Color Rendering	Footnotes	Warning and Caution Notices
Ecolux® Standby Longlife Lucalox® Lamps (TCLP Compliant) (continued)																				
250 Watts																				
ED18	E39	O	U	250	9.75	5.75	61371	LU250/SBY/XL/ECO	S50	12		40000	27500	24750	2000	22	Clear, Standby Longlife, Dual Arc Tube, TCLP Compliant			111
400 Watts																				
ED18	E39	O	U	400	9.75	5.75	61372	LU400/SBY/XL/ECO	S51	12		40000	50000	45000	2000	22	Clear, Standby Longlife, Dual Arc Tube, TCLP Compliant		49	111
Standby Longlife Lucalox® Lamps																				
1000 Watts																				
E25	E39	O	U	1000	15.06	8.75	27185	LU1000/SBY/XL	S52	6		40000	127000	115000	2100	22	Clear, Standby Longlife, Dual Arc Tube		49	111
Ecolux® NC Non-Cycling High Pressure Sodium Lamps (TCLP Compliant)																				
70 Watts																				
ED23.5	E39	O	U	70	7.75	5.00	14672	LU70/ECO/NC	S62	12		30000	6300	5670	1900	23	Clear, Non-Cycling			111
100 Watts																				
ED23.5	E39	O	U	100	7.75	5.00	14673	LU100/ECO/NC	S54	12		30000	9800	8820	2000	23	Clear, Non-Cycling			111
150 Watts																				
ED23.5	E39	O	U	150	7.75	5.00	40390	LU150/55/ECO/NC	S55	12		40000	16000	14400	2000	23	Clear, Non-Cycling			111
200 Watts																				
ED18	E39	O	U	200	9.75	5.75	45059	LU200/ECO/NC	S66	20		30000	22000	19800	2100	22	Clear, Non-Cycling			111
250 Watts																				
ED18	E39	O	U	250	9.75	5.75	14674	LU250/ECO/NC	S50	12		40000	29000	26100	2000	30	Clear, Non-Cycling			111
400 Watts																				
ED18	E39	O	U	400	9.75	5.75	14675	LU400/ECO/NC	S51	12		40000	54000	48600	2100	30	Clear, Non-Cycling			111
Lucalox® PSL Lamps for Greenhouse																				
400 Watts																				
T15	E40	O	U	400	11.5	6.89	41845	LU400/XOPSL/T/40	HID	12		12000	56500		2100	22	Clear, 110V			111
600 Watts																				
T15	E40	O	U	600	11.5	6.65	41850	LU600/XOPSL/T/40	HID	12		12000	90000		2100	22	Clear, 115V			111
750 Watts																				
T16	E40	O	U	750	11.5	6.73	41856	LU750/XOPSL/T/40	HID	12		10000	112000		2100	22	Clear, 115V			111
		O	U	750	11.5	6.89	76134	LU750/400PSL/T40	HID	12		12000	112000		2100	22	Clear, 205V			111
Mercury Lamps																				
100 Watts																				
ED17	E26	O	U	100	5.43	3.50	17113	HR100DX38/MED	H38	5		20000	4000	2800	3900	50	Deluxe White			113
ED23.5	E39	O	U	100	7.50	5.00	12471	HR100A38	H38	5		20000	3850	2695	5700	15	Clear			113
		O	U	100	7.50	5.00	22575	HR100DX38	H38	12		20000	4000	2800	3900	50	Deluxe White			113
		O	U	100	7.50	5.00	26437	HR100DX38/CP	H38	4		20000	4000	2800	3900	50	Deluxe White, Consumer Pack			113
175 Watts																				
ED28	E39	O	U	175	8.25	5.00	24048	HR175A39	H39	12		20000	7850	6670	5700	15	Clear			113
		O	U	175	8.25	5.00	26440	HR175A39/CP	H39	4		20000	7850	6670	5700	15	Clear, Consumer Pack			113
		O	U	175	8.25	5.00	24062	HR175DX39	H39	12		20000	7800	6630	3900	50	Deluxe White			113
		O	U	175	8.25	5.00	26439	HR175DX39/CP	H39	4		20000	7800	6630	3900	50	Deluxe White, Consumer Pack			113
250 Watts																				
ED28	E39	O	U	250	8.25	5.00	24068	HR250A37	H37	12		20000	11000	7700	5700	15	Clear			113
		O	U	250	8.25	5.00	32127	HR250DX37	H37	12		20000	11200	7840	3900	50	Deluxe White			113
400 Watts																				
ED37	E39	O	U	400	11.31	7.00	23974	HR400A33	H33	6		20000	21000	14700	5700	15	Clear			113
		O	U	400	11.31	7.00	23998	HR400DX33	H33	6		20000	22600	15800	3900	50	Deluxe White			113

General Information

Fixture Requirements – Lamp Enclosure type

HID lamps have fixture requirements that must be followed. The following three codes identify the appropriate fixture for a particular lamp. Lamps having an "O" code can be operated in an "Open or Enclosed" fixture. Lamps with a "S" code can be used in open fixtures only if operated in a vertical ±15° burn position. Lamps in all other burn positions must be suitably enclosed.

O = Open or Enclosed Fixtures

E = Enclosed Fixtures Only

S = Lamps operated in a vertical position (Base Up or Down), ±15°, can be used in an open fixture. Lamps burned in any other orientation must be used in "enclosed fixtures only."

Use in Enclosed Fixtures. "Enclosed" fixture means a fixture suitably enclosed and designed to contain fragments of hot quartz or glass (up to 1100°C) per UL Standard #1598 (if in doubt, contact your fixture manufacturer).

Use In Open Fixtures. For lamps operated in the vertical position ±15° that are not designated "Enclosed Fixtures Only," lamp may be used in an open or enclosed lighting fixture depending upon the application and operating environment. For example, if the lamp is located near combustible material or in an area which is unoccupied for extended periods, an enclosed fixture which can contain fragments of hot quartz or glass is recommended. For more information, contact your fixture manufacturer.

Protection of Bulbs from Moisture

Outer bulbs of HID lamps are made of heat-resistant glass, designed to have strength and thermal-shock-resistant characteristics suitable for normal applications in typical luminaries. However, shielding of lamps must be provided to avoid bulb breakage that could result from direct contact with liquids (such as water) during operation.

Rated Life

Values are based on laboratory tests of a large number of representative lamps under controlled conditions, including operation at 10 hours per start on ballasts having specified electrical characteristics. Individual lamps or groups of lamps may, of course, vary from the Rated Life shown. Lamp operating conditions can also affect life. Where Rated Life is less than 24,000 hours, it is a MEDIAN value of life expectancy; that is, the total operating time at which, under normal operating conditions, 50% of any large group of initially installed lamps is expected to be still burning. Where Rated Life is 24,000+ hours, 67% of lamps are expected to be still burning at 24,000 hours. For cost-of-light calculations involving these lamps, if an estimated operating time is required at which 50% of the lamps will still be burning, a value of 28,500 hours is suggested. At burning cycles shorter than 10 hours per start, the median life will be shortened approximately as follows:

5 hrs/start:	approx. life 75% of rating
2-1/2 hrs/start:	approx. life 56% of rating
1-1/4 hrs/start:	approx. life 42% of rating

Lumens – Lumens listed are reference lumens

Rated average lamp lumens are obtained under controlled laboratory conditions in a prescribed burning position. **Initial Reference Lumens** refer to the lamp lumen output after 100-hours burning. **Mean Reference Lumens** refer to the lamp lumen output at the mean lumen point during lamp life. The mean lumen point occurs at 50% rated life for HPS and mercury lamps, and at 40% rated life for metal halide lamps. Lamp performance on typical systems under typical service conditions will vary from the reference lumen ratings.

High Intensity Discharge lighting systems are subject to a wide range of variations which may affect final lighting levels. As a result, lamp performance on actual systems may vary due to lamp orientation, ambient temperatures, ballast variations, line voltage and other reasons. Care must be taken when choosing a system to consider how these changes can affect your light levels both initially and at the mean lumen point.

Ballasts

HID lamps (except E-Z-Merc®) require auxiliary ballast equipment designed to produce proper electrical values. Actual lamp watts may vary depending on ballast characteristics. For total system watts, add nominal ballast watts.

All Lucalox®, Mercury, and Metal Halide lamps (except I-Line) will start at ambient temperatures of -22°F (-30°C). I-Line Multi-Vapor® will start at ambient temperatures of 5°F (-15°C) when used on approved mercury ballasts.

Start Characteristics

Full light output does not occur immediately when power is applied. Instead, there is a time delay for the lamp to reach 90% total light output. The starting delay for High Pressure Sodium is 3-4 minutes, for Metal Halide 2-5 minutes, and for Mercury 5-7 minutes.

Restart Characteristics

With a power interruption of a half cycle or more, the arc will extinguish. When power is immediately reapplied, full light output does not occur immediately. For HPS lamps there is a delay of 1 minute to reach 90% total light output; however, Lucalox® LU1000 requires 2 minutes and E-Z Lux® lamps require 3 minutes to reach 90% total light output. For most Metal Halide lamps, including CMH®, when the power is immediately reapplied, there will be a delay of 10 to 17 minutes before the lamps reach the 90% light output level. PulseArc® lamps restrike in <4 minutes. The restart delay for mercury lamps is 3 to 6 minutes to reach 90% total light output.

Operating Positions and Codes

Mercury and High Pressure Sodium lamps may be operated in any burn position and will still maintain their rated performance specifications. Metal Halide and Low Pressure Sodium lamps, however, are optimized for performance in specific burn positions, or may be restricted to certain burn positions for safety reasons.

U = Universal burning position

HBU = Horizontal -15° to Base Up

HBD = Horizontal +15° to Base Down

HOR = Horizontal ±15°

HOR PA = ±75°

HOR ±60° = applies to MVR 1650

H45 = Horizontal to ±45° only

VBU = Vertical Base Up ±15°

VBD = Vertical Base Down ±15°

If no special burn position is noted, the burn position is universal.

HID Color

The color temperature and CRI listed in the tabular data are for reference purposes only. All high intensity discharge lamps exhibit some degree of lamp-to-lamp color variation and shift over life. These characteristics can be increased based on choice of fixture, ballast, burning position, and ambient conditions. Color variation can be greater than normal during the initial 100 hours of burning. Where color consistency is important, consider using ConstantColor® CMH® for better performance. Contact your local GE Lighting representative for more information.

Export Base Lamps (/27 and /40)

Export only lamps have a non-domestic (non-U.S.) base and are not intended for use in the United States due to potential shock hazard. The lamps are identified by "/27" or "/40" at the end of the lamp description and comply with electrical characteristics defined by IEC standards.

Operating Notes

CMH® Chromafit™ Metal Halide Lamps

Use in enclosed luminaire with front cover made of glass, capable of containing the fragments of a lamp should it shatter, to avoid risk of fire. Do not use with Polymeric Lens.

MXR32 Metal Halide Lamp and Electronic Ballast

MXR32 lamps must be operated on GE's special, high-power-factor electronic ballast, HAL32/120. Outside dimensions for the ballast are 9-1/4" long, 3-1/8" wide and 1-3/4" high.

Dimming

High Wattage CMH® lamps may be dimmed to 50% of full rated wattage. With dimming, the color shifts to a cooler (higher Kelvin) temperature and CRI decreases. The dimming of 20-150W CMH® lamps is not normally recommended. Large power reductions significantly alter the thermal characteristics of the lamp resulting in color shift. Quartz metal halide and mercury vapor lamps may be dimmed to 50% of full rated wattage. High pressure sodium lamps may be dimmed to 35%. For all dimming, the lamp must be started in full-power mode and must be operated in that mode for a minimum of fifteen minutes prior to reduced-power operation. Minimum open circuit voltage must meet ANSI requirements at full-power, during power transition, and in the reduced-power mode to prevent premature cycling (see appropriate ANSI lamp documents for specific minimum OCV requirements). Other application guidelines may apply.

Footnotes

9 Do not use this lamp in fixtures designed for less than rated lamp wattage.

14 Life shown is for vertical +15° operation.

16 Approximate lumen ratings at 45° burning position: Initial – 145,000. Mean – 124,000.

17 Rated life based on 5 or more burning hours per start.

28 Use only 1000-watt H12 or H34-type ballasts. Do not use on 1000-watt H36-type ballasts.

32 Lamp will run at 400-watts when used on a linear reactor ballast.

33 Rated life based on 11 hours per start.

38 Requires a non-ANSI designated ballast with a special, add-on metal halide ignitor. Contact your local GE representative for a list of approved ballasts and ignitors.

39 UV Control is a quartz material that effectively cuts UVB and UVC radiation.

42 Approximate lumen ratings at 45° burning position: Initial – 153,000. Mean – 139,000.

43 When operated on a 120 hrs. cycle (minimum), lamp life rating may be extended by up to 50% based on engineering estimates.

44 Rated life based on 7 hours per start.

45 Use low frequency square wave (LFSW) electronic ballast, peak lead ballast, or system which can shut itself off if ballast overheating occurs.

46 Use only with the following types of H39 175-watt mercury ballasts: high-reactance lag-type autotransformers or 240-volt and 277-volt reactors. Do not use with CW (lead-type) or CWA ballasts.

47 Use only with the following types of H37 250-watt mercury ballasts: high-reactance lag-type autotransformers or 240-volt and 277-volt reactors. Do not use with CW (lead-type) or CWA ballasts.

48 Use only with the following types of H33 400-watt mercury ballasts: high-reactance lag-type autotransformers, reactors, CWA auto regulators or CW regulators.

49 Not for use with lampholders that have stainless steel center contacts to avoid lamp or lampholder damage due to arcing.

50 Not for use on Magnetic-Regulator or Electronic-Regulator ballast systems to avoid ballast overheating.

51 Use only with low frequency square wave (LFSW) electronic ballast.

52 Use only with approved ballast, do not use on high frequency electronic ballasts.

53 Rated life is 15000 hours on magnetic ballasts.

Warning Notices

THE FOLLOWING WARNING NOTICES MUST BE COMPLIED WITH TO HELP AVOID POSSIBLE LAMP RUPTURE. General Electric Company will not be responsible for poor lamp performance, personal injury or property damage resulting from failure to follow these instructions.

HID LAMPS – GENERAL

WARNING

Most HID lamps are constructed of an outer bulb with an internal arc tube made of quartz. The arc tube operates under high pressure at very high temperatures—as high as approximately 1100°C. The arc tube and outer bulb may unexpectedly rupture due to internal causes or external factors such as a system failure or misapplication.

An arc tube rupture can burst and shatter the outer glass bulb resulting in the discharge of glass fragments and extremely hot quartz particles (as high as 1100°C). There is a risk of personal injury, property damage, burns and fire.

Some lamps are position-sensitive and must only be operated in specified burning positions (see "Additional Information" column in this catalog) with compatible electrical equipment in the types of fixtures prescribed in "Lamp Enclosure Type" on page 3-22 of this catalog.

In addition to the general warnings above, there are specific warnings for the HID lamp types listed below.

Metal Halide Lamps

Fixture lens/diffuser material must be able to contain fragments of hot quartz or glass (up to 1100°C). If you do not know whether your fixture can safely withstand an arc tube rupture, contact your fixture manufacturer.

In continuously operating systems (24 hours/day, 7 days/week), turn lamps off once per week for at least 15 minutes. FAILURE TO COMPLY INCREASES THE RISK OF RUPTURE.

Ceramic metal halide lamps can be operated 24/7.

Relamp fixtures at or before the end of rated life. Beyond rated life, light output diminishes while energy consumption and risk of rupture increase.

High Pressure Sodium Lamps

This is a vacuum jacket lamp and may implode if broken. As a precaution, wear safety glasses and gloves when installing or removing lamp. High pressure sodium lamps are not position-sensitive and may be operated in any burning position.

Mercury Lamps

Fixture lens/diffuser material must be able to contain fragments of hot quartz or glass (up to 1100°C). If you do not know whether your fixture can safely withstand an arc tube rupture, contact your fixture manufacturer.

Relamp fixtures at or before the end of rated life. Beyond rated life, light output diminishes while energy consumption and risk of rupture increase.

Mercury lamps are not position-sensitive and may be operated in any burning position.

Low Pressure Sodium Lamps

These lamps contain sodium which will ignite when exposed to water. If lamps are not disposed of properly, there is a risk of fire in the disposal vessel. Consult GE for disposal instructions.

Lamp Enclosure Type

Use in Enclosed Fixtures. "Enclosed" fixture means a fixture suitably enclosed and designed to contain fragments of hot quartz or glass (up to 1100°C) in accordance with UL Standard #1598 (if in doubt, contact your fixture manufacturer).

Use In Open Fixtures. For lamps operated in the vertical position ±15° that are not designated "Enclosed Fixtures Only," lamp may be used in an open or enclosed lighting fixture depending upon the application and operating environment. For example, if the lamp is located near combustible material or in an area which is unoccupied for extended periods, an enclosed fixture which can contain fragments of hot quartz or glass is recommended. For more information, contact your fixture manufacturer.

Important Notice

In accordance to Federal Regulations (21 CFR 1040.30), the following notice applies to all lamps in the HID section of this catalog except E-Z Merc self ballasted lamps, High Pressure, Low Pressure Sodium Lamps, Saf-T-Gard® Multi-Vapor Lamps, CMH® MR16, CMH® PAR20 and CMH® PAR30.

⚠ R WARNING: **This lamp can cause serious skin burn and eye inflammation from shortwave ultraviolet radiation if outer envelope of the lamp is broken or punctured. Do not use where people will remain for more than a few minutes unless adequate shielding or other safety precautions are used. Lamps that will automatically extinguish when the outer envelope is broken or punctured are commercially available.**

Warning and Caution Notices

100 – CMH® PAR38 INTEGRAL Kr85

⚠ WARNING

Risk of electric shock

- Turn power off before inspection, installation or removal
- Do not use where directly exposed to water
- Not for use with dimmers
- Do not open - no user serviceable parts inside

Risk of fire

- Keep combustible materials away from lamp
- Do not use in totally enclosed recessed fixtures

A damaged lamp emits UV radiation which may cause eye/skin injury

- Turn power off if glass bulb is broken. Remove and dispose of lamp.

Unexpected lamp rupture may cause injury, fire, or property damage

- Do not exceed rated voltage
- Do not use lamp if outer glass is scratched or broken
- Do not store flammable materials near/below lamp
- Do not use beyond rated life
- Do not turn on lamp until fully installed

⚠ CAUTION

Risk of burn

- Allow lamp to cool before handling
- Do not turn on lamp until fully installed

Lamp may shatter and cause injury if broken

- Do not use lamp if outer glass is scratched or broken
- Dispose of lamp in a closed container
- Do not use excessive force when installing lamp

Notes

- ARC tube fill gas contains Kr85
- CMH® lamps may operate 24 hours a day/7 days a week to rated life—no shut off required
- This product complies with Part 18 of the FCC Rules, but may cause interference to radios, televisions, wireless telephones, and remote controls. Avoid placing this product near these devices. If interference occurs, move the product away from the device or plug either into a different outlet. Do not install this product near maritime safety equipment or other critical navigation or communication equipment operating between 0.45-30 MHz. This device is not intended for use with emergency exit fixtures or lights, electronic timers, photocells, or with dimmers
- Use only on 120V, 60Hz circuits. Do not operate with additional ballasts. Do not use where directly exposed to water.
- When illuminating light-sensitive materials use of an extra UV filter is recommended.
- Lamps may require several hours of operation to stabilize in color. Color change may also be affected by shock and vibration. Color appearance may vary between individual lamps.

101 – Arcstream®

⚠ WARNING

Risk of electric shock

- Turn power off before inspection, installation or removal
- Do not use where directly exposed to water or outdoors without an enclosed fixture

Risk of fire

- Keep combustible materials away from lamp
- Use in fixture rated for this product
- Use thermally protected ballast

A damaged lamp emits UV radiation which may cause eye/skin injury

- Turn power off if glass bulb is broken. Remove and dispose of lamp.

Unexpected lamp rupture may cause injury, fire, or property damage

- Do not exceed rated voltage
- Do not use where directly exposed to water or outdoors without an enclosed fixture
- Use in enclosed fixture rated for this product
- Do not use lamp if outer glass is scratched or broken
- Use only properly rated ballast
- Operate lamp only in specified position
- Turn lamp off at least once for 15 minutes per week
- Do not turn on lamp until fully installed

⚠ CAUTION

Risk of burn

- Allow lamp to cool before handling
- Do not turn on lamp until fully installed

Lamp may shatter and cause injury if broken

- Wear safety glasses and gloves when handling lamp
- Do not use lamp if outer glass is scratched or broken
- Do not use excessive force when installing lamp

102 – Arcstream® G12 Kr85

⚠ WARNING

Risk of electric shock

- Turn power off before inspection, installation or removal
- Do not use where directly exposed to water or outdoors without an enclosed fixture

Risk of fire

- Keep combustible materials away from lamp
- Use in fixture rated for this product
- Use thermally protected ballast

Lamp emits UV radiation which may cause eye/skin injury

- Eye or skin irritation may result from exposure. Use appropriate shielding. RG-2

Unexpected lamp rupture may cause injury, fire, or property damage

- Do not exceed rated voltage
- Do not touch glass with bare hands
- Do not use where directly exposed to water or outdoors without an enclosed fixture
- Use in enclosed fixture rated for this product
- Do not use lamp if outer glass is scratched or broken
- Use only properly rated ballast

Warning and Caution Notices (continued)

- Turn lamp off at least once for 15 minutes per week
- Do not turn on lamp until fully installed

⚠ CAUTION

Risk of burn

- Allow lamp to cool before handling
- Do not turn on lamp until fully installed

Lamp may shatter and cause injury if broken

- Do not use lamp if outer glass is scratched or broken
- Do not use excessive force when installing lamp

Notes

- ARC tube fill gas contains Kr85

103 – Arcstream® Rx7s Kr85

⚠ WARNING

Risk of electric shock

- Turn power off before inspection, installation or removal
- Do not use where directly exposed to water or outdoors without an enclosed fixture

Risk of fire

- Keep combustible materials away from lamp
- Use in fixture rated for this product
- Use thermally protected ballast

A damaged lamp emits UV radiation which may cause eye/skin injury

- Turn power off if glass bulb is broken. Remove and dispose of lamp.

Unexpected lamp rupture may cause injury, fire, or property damage

- Do not exceed rated voltage
- Do not touch glass with bare hands
- Do not use in wet locations
- Use in enclosed fixture rated for this product
- Do not use lamp if outer glass is scratched or broken
- Use only properly rated ballast
- Operate lamp only in specified position
- Turn lamp off at least once for 15 minutes per week
- Do not turn on lamp until fully installed

⚠ CAUTION

Risk of burn

- Allow lamp to cool before handling
- Do not turn on lamp until fully installed

Lamp may shatter and cause injury if broken

- Wear safety glasses and gloves when handling lamp
- Do not use lamp if outer glass is scratched or broken
- Dispose of lamp in a closed container
- Do not use excessive force when installing lamp

Notes

- ARC tube fill gas contains Kr85

104 – CMH® GU6.5, G12 and Mini Kr85

⚠ WARNING

Risk of electric shock

- Turn power off before inspection, installation or removal
- Do not use where directly exposed to water or outdoors without an enclosed fixture

Risk of fire

- Keep combustible materials away from lamp
- Use in fixture rated for this product
- Use fused or thermally protected ballast—see instructions

A damaged lamp emits UV radiation which may cause eye/skin injury

- Turn power off if glass bulb is broken. Remove and dispose of lamp.

Unexpected lamp rupture may cause injury, fire, or property damage

- Do not exceed rated voltage
- Normal handling with bare hands is acceptable. Excessive handling of the quartz outer bulb should be avoided.
- Do not use where directly exposed to water or outdoors without an enclosed fixture
- Use in enclosed fixture rated for this product
- Do not use lamp if outer glass is scratched or broken
- Use only properly rated ballast
- Do not use beyond rated life
- Do not turn on lamp until fully installed

⚠ CAUTION

Risk of burn

- Allow lamp to cool before handling
- Do not turn on lamp until fully installed

Lamp may shatter and cause injury if broken

- Do not use lamp if outer glass is scratched or broken
- Do not use excessive force when installing lamp

Notes

- ARC tube fill gas contains Kr85
- CMH® lamps may operate 24 hours a day/7 days a week to rated life—no shut off required

105 – CMH® HW HPS Kr85

⚠ WARNING

Risk of electric shock

- Turn power off before inspection, installation or removal
- Do not use where directly exposed to water or outdoors without an enclosed fixture

Risk of fire

- Keep combustible materials away from lamp
- Use in fixture rated for this product
- CMH® Chromafit™ lamps are compatible with properly rated magnetic HPS ballasts and low frequency square wave (LFSW) electronic ballasts. For CMH400 /R use LFSW electronic ballast, peak lead ballast or system which can shut itself off if ballast overheating occurs.

A damaged lamp emits UV radiation which may cause eye/skin injury

- Turn power off if glass bulb is broken. Remove and dispose of lamp.

Unexpected lamp rupture may cause injury, fire, or property damage

- Do not exceed rated voltage
- Do not use where directly exposed to water or outdoors without an enclosed fixture
- Use in enclosed luminaire with front cover made of GLASS, capable of containing the fragments of a lamp should it shatter, to avoid risk of fire. Do not use with polymeric lens.
- Do not use lamp if outer glass is scratched or broken
- Use only properly rated ballast
- Do not use beyond rated life
- Do not turn on lamp until fully installed

Warning and Caution Notices (continued)

⚠ CAUTION

Risk of burn

- Allow lamp to cool before handling
- Do not turn on lamp until fully installed

Lamp may shatter and cause injury if broken

- Wear safety glasses and gloves when handling lamp
- Do not use lamp if outer glass is scratched or broken
- Dispose of lamp in a closed container
- Do not use excessive force when installing lamp

Notes

- ARC tube fill gas contains Kr85
- CMH® lamps may operate 24 hours a day/7 days a week to rated life—no shut off required

106 – CMH® HW PA Kr85

⚠ WARNING

Risk of electric shock

- Turn power off before inspection, installation or removal
- Do not use where directly exposed to water or outdoors without an enclosed fixture

Risk of fire

- Keep combustible materials away from lamp
- Use GE approved ballast/control gear

A damaged lamp emits UV radiation which may cause eye/skin injury

- Turn power off if glass bulb is broken. Remove and dispose of lamp.

Unexpected lamp rupture may cause injury, fire, or property damage

- Do not exceed rated voltage
- Do not use where directly exposed to water or outdoors without an enclosed fixture
- Do not use lamp if outer glass is scratched or broken
- Use only properly rated ballast
- Operate lamp only in specified position
- Do not store flammable materials near/below lamp
- Do not use beyond rated life
- Do not turn on lamp until fully installed

⚠ CAUTION

Risk of burn

- Allow lamp to cool before handling
- Do not turn on lamp until fully installed

Lamp may shatter and cause injury if broken

- Do not use lamp if outer glass is scratched or broken
- Dispose of lamp in a closed container
- Do not use excessive force when installing lamp

Notes

- ARC tube fill gas contains Kr85
- CMH® lamps may operate 24 hours a day/7 days a week to rated life—no shut off required

107 – CMH® PAR 20-30 MR16 Kr85

⚠ WARNING

Risk of electric shock

- Turn power off before inspection, installation or removal
- Do not use where directly exposed to water or outdoors without an enclosed fixture

Risk of fire

- Keep combustible materials away from lamp
- Use in fixture rated for this product
- Use fused or thermally protected ballast—see instructions

Unexpected lamp rupture may cause injury, fire, or property damage

- Do not exceed rated voltage
- Do not use where directly exposed to water or outdoors without an enclosed fixture
- Do not use lamp if outer glass is scratched or broken
- Use only properly rated ballast
- Do not store flammable materials near/below lamp
- Do not use beyond rated life
- Do not turn on lamp until fully installed

⚠ CAUTION

Risk of burn

- Allow lamp to cool before handling
- Do not turn on lamp until fully installed

Lamp may shatter and cause injury if broken

- Do not use lamp if outer glass is scratched or broken
- Do not use excessive force when installing lamp

Notes

- ARC tube fill gas contains Kr85
- CMH® lamps may operate 24 hours a day/7 days a week to rated life—no shut off required
- Lamps designated as CMH70/PAR30 do not require thermally protected ballasts

108 – CMH® PAR38 Kr85

⚠ WARNING

Risk of electric shock

- Turn power off before inspection, installation or removal
- Do not use where directly exposed to water or outdoors without an enclosed fixture

Risk of fire

- Keep combustible materials away from lamp
- Use in fixture rated for this product

A damaged lamp emits UV radiation which may cause eye/skin injury

- Turn power off if glass bulb is broken. Remove and dispose of lamp.

Unexpected lamp rupture may cause injury, fire, or property damage

- Do not exceed rated voltage
- Do not use lamp if outer glass is scratched or broken
- Use only properly rated ballast
- Do not turn on lamp until fully installed

⚠ CAUTION

Risk of burn

- Allow lamp to cool before handling
- Do not turn on lamp until fully installed

Lamp may shatter and cause injury if broken

- Do not use lamp if outer glass is scratched or broken

Notes

- ARC tube fill gas contains Kr85
- CMH® lamps may operate 24 hours a day/7 days a week to rated life—no shut off required

Warning and Caution Notices (continued)

109 – CMH® TD Kr85

⚠ WARNING

Risk of electric shock

- Turn power off before inspection, installation or removal
- Do not use where directly exposed to water or outdoors without an enclosed fixture

Risk of fire

- Keep combustible materials away from lamp
- Use in fixture rated for this product

A damaged lamp emits UV radiation which may cause eye/skin injury

- Turn power off if glass bulb is broken. Remove and dispose of lamp.

Unexpected lamp rupture may cause injury, fire, or property damage

- Do not exceed rated voltage
- Normal handling with bare hands is acceptable. Excessive handling of the quartz outer bulb should be avoided.
- Do not use where directly exposed to water or outdoors without an enclosed fixture
- Use in enclosed fixture rated for this product
- Do not use lamp if outer glass is scratched or broken
- Use only properly rated ballast
- Operate lamp only in specified position
- Do not use beyond rated life
- Do not turn on lamp until fully installed

⚠ CAUTION

Risk of burn

- Allow lamp to cool before handling
- Do not turn on lamp until fully installed

Lamp may shatter and cause injury if broken

- Do not use lamp if outer glass is scratched or broken
- Do not use excessive force when installing lamp

Notes

- ARC tube fill gas contains Kr85
- CMH® lamps may operate 24 hours a day/7 days a week to rated life—no shut off required

110 – Kolorarc® Kr85

⚠ WARNING

Risk of electric shock

- Turn power off before inspection, installation or removal
- Do not use where directly exposed to water or outdoors without an enclosed fixture

Risk of fire

- Keep combustible materials away from lamp
- Use in fixture rated for this product

A damaged lamp emits UV radiation which may cause eye/skin injury

- Turn power off if glass bulb is broken. Remove and dispose of lamp.

Unexpected lamp rupture may cause injury, fire, or property damage

- Do not exceed rated voltage
- Do not use where directly exposed to water or outdoors without an enclosed fixture
- Use in enclosed fixture rated for this product
- Do not use lamp if outer glass is scratched or broken
- Use only properly rated ballast
- Operate lamp only in specified position
- Turn lamp off at least once for 15 minutes per week
- Do not turn on lamp until fully installed

⚠ CAUTION

Risk of burn

- Allow lamp to cool before handling
- Do not turn on lamp until fully installed

Lamp may shatter and cause injury if broken

- Wear safety glasses and gloves when handling lamp
- Do not use lamp if outer glass is scratched or broken
- Dispose of lamp in a closed container
- Do not use excessive force when installing lamp

Notes

- ARC tube fill gas contains Kr85

111 – Lucalox®

⚠ WARNING

Risk of electric shock

- Turn power off before inspection, installation or removal
- Do not use where directly exposed to water or outdoors without an enclosed fixture

Risk of fire

- Keep combustible materials away from lamp
- Use in fixture rated for this product

Contains sodium—chemical burn risk

- Avoid skin contact with broken pieces

Unexpected lamp rupture may cause injury, fire, or property damage

- Do not exceed rated voltage
- Do not use where directly exposed to water or outdoors without an enclosed fixture
- Do not use lamp if outer glass is scratched or broken
- Use only properly rated ballast
- Do not store flammable materials near/below lamp
- Do not turn on lamp until fully installed

⚠ CAUTION

Risk of burn

- Allow lamp to cool before handling
- Do not turn on lamp until fully installed

Lamp may shatter and cause injury if broken

- Wear safety glasses and gloves when handling lamp
- Do not use lamp if outer glass is scratched or broken
- Dispose of lamp in a closed container
- Do not use excessive force when installing lamp

Warning and Caution Notices (continued)

112 – Lucalox® HO

⚠ WARNING

Risk of electric shock

- Turn power off before inspection, installation or removal
- Do not use where directly exposed to water or outdoors without an enclosed fixture

Risk of fire

- Keep combustible materials away from lamp
- Use in fixture rated for this product
- Use fused or thermally protected ballast—see instructions

Contains sodium—chemical burn risk

- Avoid skin contact with broken pieces

Unexpected lamp rupture may cause injury, fire, or property damage

- Do not exceed rated voltage
- Do not use where directly exposed to water or outdoors without an enclosed fixture
- Do not use lamp if outer glass is scratched or broken
- Use only properly rated ballast
- Do not store flammable materials near/below lamp
- Do not turn on lamp until fully installed

⚠ CAUTION

Risk of burn

- Allow lamp to cool before handling
- Do not turn on lamp until fully installed

Lamp may shatter and cause injury if broken

- Wear safety glasses and gloves when handling lamp
- Do not use lamp if outer glass is scratched or broken
- Dispose of lamp in a closed container
- Do not use excessive force when installing lamp

113 – Mercury

⚠ WARNING

Risk of electric shock

- Turn power off before inspection, installation or removal
- Do not use where directly exposed to water or outdoors without an enclosed fixture

Risk of fire

- Keep combustible materials away from lamp
- Use in fixture rated for this product

A damaged lamp emits UV radiation which may cause eye/skin injury

- Turn power off if glass bulb is broken. Remove and dispose of lamp.

Unexpected lamp rupture may cause injury, fire, or property damage

- Do not exceed rated voltage
- Do not use where directly exposed to water or outdoors without an enclosed fixture
- Do not use lamp if outer glass is scratched or broken
- Use only properly rated ballast
- Do not store flammable materials near/below lamp
- Do not use beyond rated life
- Do not turn on lamp until fully installed

⚠ CAUTION

Risk of burn

- Allow lamp to cool before handling
- Do not turn on lamp until fully installed

Lamp may shatter and cause injury if broken

- Do not use lamp if outer glass is scratched or broken
- Dispose of lamp in a closed container
- Do not use excessive force when installing lamp

Notes

- ARC tube fill gas contains Kr85 (HR 1000 only)

114 – Mercury Saf-T-Gard®

⚠ WARNING

Risk of electric shock

- Turn power off before inspection, installation or removal
- Do not use where directly exposed to water or outdoors without an enclosed fixture

Risk of fire

- Keep combustible materials away from lamp
- Use in fixture rated for this product

Unexpected lamp rupture may cause injury, fire, or property damage

- Do not exceed rated voltage
- Do not use where directly exposed to water or outdoors without an enclosed fixture
- Do not use lamp if outer glass is scratched or broken
- Use only properly rated ballast
- Turn lamp off at least once for 15 minutes per week
- Do not store flammable materials near/below lamp
- Do not use beyond rated life
- Do not turn on lamp until fully installed

⚠ CAUTION

Risk of burn

- Allow lamp to cool before handling
- Do not turn on lamp until fully installed

Lamp may shatter and cause injury if broken

- Do not use lamp if outer glass is scratched or broken
- Dispose of lamp in a closed container
- Do not use excessive force when installing lamp

115 – Mercury Self-Ballasted

⚠ WARNING

Risk of electric shock

- Turn power off before inspection, installation or removal
- Do not use where directly exposed to water or outdoors without an enclosed fixture

Risk of fire

- Keep combustible materials away from lamp
- Use in fixture rated for this product

A damaged lamp emits UV radiation which may cause eye/skin injury

- Turn power off if glass bulb is broken. Remove and dispose of lamp.

Unexpected lamp rupture may cause injury, fire, or property damage

- Do not exceed rated voltage
- Do not use where directly exposed to water or outdoors without an enclosed fixture
- Do not use lamp if outer glass is scratched or broken

Warning and Caution Notices (continued)

⚠ CAUTION

Risk of burn

- Allow lamp to cool before handling
- Do not turn on lamp until fully installed

Lamp may shatter and cause injury if broken

- Do not use lamp if outer glass is scratched or broken
- Dispose of lamp in a closed container
- Do not use excessive force when installing lamp

116 – QMH E-rated Kr85 and CMH®

⚠ WARNING

Risk of electric shock

- Turn power off before inspection, installation or removal
- Do not use where directly exposed to water or outdoors without an enclosed fixture

Risk of fire

- Keep combustible materials away from lamp
- Use in fixture rated for this product

A damaged lamp emits UV radiation which may cause eye/skin injury

- Turn power off if glass bulb is broken. Remove and dispose of lamp.

Unexpected lamp rupture may cause injury, fire, or property damage

- Do not exceed rated voltage
- Do not use where directly exposed to water or outdoors without an enclosed fixture
- Use in enclosed fixture rated for this product
- Do not use lamp if outer glass is scratched or broken
- Use only properly rated ballast
- Operate lamp only in specified position
- Turn lamp off at least once for 15 minutes per week. Does not apply to CMH®
- Do not use beyond rated life
- If used on a dimming system, see instructions
- Do not turn on lamp until fully installed

⚠ CAUTION

Risk of burn

- Allow lamp to cool before handling
- Do not turn on lamp until fully installed

Lamp may shatter and cause injury if broken

- Do not use lamp if outer glass is scratched or broken
- Dispose of lamp in a closed container
- Do not use excessive force when installing lamp

Notes

- ARC tube fill gas contains Kr85
- CMH® lamps may operate 24 hours a day/7 days a week to rated life—no shut off required

117 – QMH HOR Enclosed Kr85

⚠ WARNING

Risk of electric shock

- Turn power off before inspection, installation or removal
- Do not use where directly exposed to water or outdoors without an enclosed fixture

Risk of fire

- Keep combustible materials away from lamp
- Use in fixture rated for this product

A damaged lamp emits UV radiation which may cause eye/skin injury

- Turn power off if glass bulb is broken. Remove and dispose of lamp.

Unexpected lamp rupture may cause injury, fire, or property damage

- Do not exceed rated voltage
- Do not use where directly exposed to water or outdoors without an enclosed fixture
- Use in enclosed fixture rated for this product
- Do not use lamp if outer glass is scratched or broken
- Use only properly rated ballast
- Operate lamp only in specified position
- Turn lamp off at least once for 15 minutes per week
- Do not use beyond rated life
- Do not remove base locating pin if so equipped
- Do not turn on lamp until fully installed

⚠ CAUTION

Risk of burn

- Allow lamp to cool before handling
- Do not turn on lamp until fully installed

Lamp may shatter and cause injury if broken

- Do not use lamp if outer glass is scratched or broken
- Dispose of lamp in a closed container
- Do not use excessive force when installing lamp

Notes

- ARC tube fill gas contains Kr85

118 – QMH LW Kr85

⚠ WARNING

Risk of electric shock

- Turn power off before inspection, installation or removal
- Do not use where directly exposed to water or outdoors without an enclosed fixture

Risk of fire

- Keep combustible materials away from lamp
- Use in fixture rated for this product

A damaged lamp emits UV radiation which may cause eye/skin injury

- Turn power off if glass bulb is broken. Remove and dispose of lamp.

Unexpected lamp rupture may cause injury, fire, or property damage

- Do not exceed rated voltage
- Do not use where directly exposed to water or outdoors without an enclosed fixture
- Use in enclosed fixture rated for this product
- Do not use lamp if outer glass is scratched or broken

Warning and Caution Notices (continued)

- Use only properly rated ballast
- Turn lamp off at least once for 15 minutes per week
- Do not use beyond rated life
- Do not turn on lamp until fully installed

⚠ CAUTION

Risk of burn

- Allow lamp to cool before handling
- Do not turn on lamp until fully installed

Lamp may shatter and cause injury if broken

- Do not use lamp if outer glass is scratched or broken
- Dispose of lamp in a closed container
- Do not use excessive force when installing lamp

Notes

- ARC tube fill gas contains Kr85

119 – QMH Protected

⚠ WARNING

Risk of electric shock

- Turn power off before inspection, installation or removal
- Do not use where directly exposed to water or outdoors without an enclosed fixture

Risk of fire

- Keep combustible materials away from lamp
- Use in fixture rated for this product

A damaged lamp emits UV radiation which may cause eye/skin injury

- Turn power off if glass bulb is broken. Remove and dispose of lamp.

Unexpected lamp rupture may cause injury, fire, or property damage

- Do not exceed rated voltage
- Do not use where directly exposed to water or outdoors without an enclosed fixture
- Do not use lamp if outer glass is scratched or broken
- Use only properly rated ballast
- Operate lamp only in specified position
- Turn lamp off at least once for 15 minutes per week
- Do not store flammable materials near/below lamp
- Do not use beyond rated life
- If used on a dimming system, see instructions.
- Do not turn on lamp until fully installed

⚠ CAUTION

Risk of burn

- Allow lamp to cool before handling
- Do not turn on lamp until fully installed

Lamp may shatter and cause injury if broken

- Do not use lamp if outer glass is scratched or broken
- Dispose of lamp in a closed container
- Do not use excessive force when installing lamp

120 – QMH Protected Kr85

⚠ WARNING

Risk of electric shock

- Turn power off before inspection, installation or removal
- Do not use where directly exposed to water or outdoors without an enclosed fixture

Risk of fire

- Keep combustible materials away from lamp
- Use in fixture rated for this product

A damaged lamp emits UV radiation which may cause eye/skin injury

- Turn power off if glass bulb is broken. Remove and dispose of lamp.

Unexpected lamp rupture may cause injury, fire, or property damage

- Do not exceed rated voltage
- Do not use where directly exposed to water or outdoors without an enclosed fixture
- Do not use lamp if outer glass is scratched or broken
- Use only properly rated ballast
- Operate lamp only in specified position
- Turn lamp off at least once for 15 minutes per week
- Do not store flammable materials near/below lamp
- Do not use beyond rated life
- Do not turn on lamp until fully installed

⚠ CAUTION

Risk of burn

- Allow lamp to cool before handling
- Do not turn on lamp until fully installed

Lamp may shatter and cause injury if broken

- Do not use lamp if outer glass is scratched or broken
- Dispose of lamp in a closed container
- Do not use excessive force when installing lamp

Notes

- ARC tube fill gas contains Kr85

121 – QMH S-rated

⚠ WARNING

Risk of electric shock

- Turn power off before inspection, installation or removal
- Do not use where directly exposed to water or outdoors without an enclosed fixture

Risk of fire

- Keep combustible materials away from lamp
- Use in fixture rated for this product

A damaged lamp emits UV radiation which may cause eye/skin injury

- Turn power off if glass bulb is broken. Remove and dispose of lamp.

Unexpected lamp rupture may cause injury, fire, or property damage

- Do not exceed rated voltage
- Do not use where directly exposed to water or outdoors without an enclosed fixture
- Use in enclosed fixture rated for this product—see instructions
- Do not use lamp if outer glass is scratched or broken
- Use only properly rated ballast
- Operate lamp only in specified position
- Turn lamp off at least once for 15 minutes per week

Warning and Caution Notices (continued)

- Do not store flammable materials near/below lamp
- Do not use beyond rated life
- If used on a dimming system, see instructions
- Do not turn on lamp until fully installed

⚠ CAUTION

Risk of burn

- Allow lamp to cool before handling
- Do not turn on lamp until fully installed

Lamp may shatter and cause injury if broken

- Wear safety glasses and gloves when handling lamp
- Do not use lamp if outer glass is scratched or broken
- Dispose of lamp in a closed container
- Do not use excessive force when installing lamp

122 – QMH S-rated Kr85

⚠ WARNING

Risk of electric shock

- Turn power off before inspection, installation or removal
- Do not use where directly exposed to water or outdoors without an enclosed fixture

Risk of fire

- Keep combustible materials away from lamp
- Use in fixture rated for this product

A damaged lamp emits UV radiation which may cause eye/skin injury

- Turn power off if glass bulb is broken. Remove and dispose of lamp.

Unexpected lamp rupture may cause injury, fire, or property damage

- Do not exceed rated voltage
- Do not use where directly exposed to water or outdoors without an enclosed fixture
- Use in enclosed fixture rated for this product—see instructions
- Do not use lamp if outer glass is scratched or broken
- Use only properly rated ballast
- Operate lamp only in specified position
- Turn lamp off at least once for 15 minutes per week
- Do not store flammable materials near/below lamp
- Do not use beyond rated life
- If used on a dimming system, see instructions
- Do not turn on lamp until fully installed

⚠ CAUTION

Risk of burn

- Allow lamp to cool before handling
- Do not turn on lamp until fully installed

Lamp may shatter and cause injury if broken

- Do not use lamp if outer glass is scratched or broken
- Dispose of lamp in a closed container
- Do not use excessive force when installing lamp

Notes

- ARC tube fill gas contains Kr85

123 – QMH S-rated Saf-T-Gard®

⚠ WARNING

Risk of electric shock

- Turn power off before inspection, installation or removal
- Do not use where directly exposed to water or outdoors without an enclosed fixture

Risk of fire

- Keep combustible materials away from lamp
- Use in fixture rated for this product

Unexpected lamp rupture may cause injury, fire, or property damage

- Do not exceed rated voltage
- Do not use where directly exposed to water or outdoors without an enclosed fixture
- Use in enclosed fixture rated for this product—see instructions
- Do not use lamp if outer glass is scratched or broken
- Use only properly rated ballast
- Operate lamp only in specified position
- Turn lamp off at least once for 15 minutes per week
- Do not store flammable materials near/below lamp
- Do not use beyond rated life
- Do not turn on lamp until fully installed

⚠ CAUTION

Risk of burn

- Allow lamp to cool before handling
- Do not turn on lamp until fully installed

Lamp may shatter and cause injury if broken

- Do not use lamp if outer glass is scratched or broken
- Dispose of lamp in a closed container
- Do not use excessive force when installing lamp

124 – Sport 1000W PAR64

⚠ WARNING

Risk of electric shock

- Turn power off before inspection, installation or removal
- Do not use where directly exposed to water or outdoors without an enclosed fixture

Risk of fire

- Keep combustible materials away from lamp
- Use in fixture rated for this product

A damaged lamp emits UV radiation which may cause eye/skin injury

- Turn power off if glass bulb is broken. Remove and dispose of lamp.

Unexpected lamp rupture may cause injury, fire, or property damage

- Do not exceed rated voltage
- Do not use where directly exposed to water or outdoors without an enclosed fixture
- Use in enclosed fixture rated for this product
- Do not use lamp if outer glass is scratched or broken
- Use only properly rated ballast
- Operate lamp only in specified position
- Turn lamp off at least once for 15 minutes per week
- Do not turn on lamp until fully installed

Warning and Caution Notices (continued)

⚠ CAUTION

Risk of burn

- Allow lamp to cool before handling
- Do not turn on lamp until fully installed

Lamp may shatter and cause injury if broken

- Wear safety glasses and gloves when handling lamp
- Do not use lamp if outer glass is scratched or broken
- Dispose of lamp in a closed container
- Do not use excessive force when installing lamp

Notes

- Operating position is beam horizontal ± 90° only.
- The PAR outer MUST be aligned to the "TOP" as indicated by the lamp marking.
- Burner pinch must be down in horizontal burn position.

125 – Sport MBIL-CSI-CID

⚠ WARNING

Risk of electric shock

- Turn power off before inspection, installation or removal
- Do not use where directly exposed to water or outdoors without an enclosed fixture

Risk of fire

- Keep combustible materials away from lamp
- Use in fixture rated for this product

Lamp emits UV radiation which may cause eye/skin injury

- Avoid exposure of eyes and skin to unshielded lamp

Unexpected lamp rupture may cause injury, fire, or property damage

- Do not exceed rated voltage
- Do not touch glass with bare hands
- Do not use where directly exposed to water or outdoors without an enclosed fixture
- Use in enclosed fixture rated for this product
- Do not use lamp if outer glass is scratched or broken
- Use only properly rated ballast
- Operate lamp only in specified position
- Turn lamp off at least once for 15 minutes per week
- Do not turn on lamp until fully installed

⚠ CAUTION

Risk of burn

- Allow lamp to cool before handling
- Do not turn on lamp until fully installed

Lamp may shatter and cause injury if broken

- Do not use lamp if outer glass is scratched or broken
- Do not use excessive force when installing lamp

Cross-Reference

GE Description	Osram/ Sylvania Description	Philips Description
Order This GE Lamp	If you currently use these lamps	
Standard & Ecolux® HPS Lamps		
Lucalox®	**Lumalux®**	**Ceramalux™**
LU35/MED	LU35/MED	C35S76/M
LU35/D/MED	LU35/D/MED	C35S76/D/M
LU50/MED/ECO	LU50/MED	C50S68/M
LU50/D/MED/ECO	LU50/D/MED	C50S68/M
LU50/H/ECO	LU50/ECO	C50S68/ALTO
LU50/D/H/ECO	LU50/D	C50S68/D
LU70/MED/ECO	LU70/MED	C70S62/M
LU70/D/MED/ECO	LU70/D/MED	C70S62/D/M
LU70/ECO/H/ECO	LU70/ECO	C70S62/ALTO
LU70/ECO/NC	LU70/PLUS/ECO	—
LU70/D/H/ECO	LU70/D	C70S62/D
LU100/MED/ECO	LU100/MED	C100S54/M
LU100/D/MED/ECO	LU100/D/MED	C100S54/D/M
LU100/H/ECO	LU100/ECO	C100S54/ALTO
LU100/ECO/NC	LU100/PLUS/ECO	—
LU100/D/H/ECO	LU100/D	C100S54/D
LU150/MED/ECO	LU150/55/MED	CC150S55/M
LU150/D/MED/ECO	LU150/55/D/MED	C150S55/D/M
LU150/55/H/ECO	LU150/55/ECO	C150S55/ALTO
LU150/ECO/NC	LU150/55/PLUS/ECO	—
LU150/55/D/H/ECO	LU150/55/D	C150S55/D
LU150/100/H/ECO	LU150/100	C150S56/ALTO
LU200/H/ECO	LU200/ECO	C200S66
LU200/ECO/NC	LU200/PLUS/ECO	—
LU250/H/ECO	LU250/ECO	C250S50
LU250/ECO/NC	LU250/PLUS/ECO	—
LU250/D/H/ECO	LU250/D	C250S50/D
LU310	LU310/ECO	C310S67
LU400/H/ECO	LU400/ECO	C400S51
LU400/ECO/NC	LU400/PLUS/ECO	—
LU400/D	LU400/D	C400S51/D
LU750	LU750	—
LU1000/ECO	LU1000	C1000S52
Deluxe High Pressure Sodium Lamps		
Lucalox®		**Ceramalux™**
LU70/DX/MED	—	C70S62/C/M
LU150/DX/MED	—	C150S55/C/M
LU150/55/DX	—	C150S55/C
LU250/DX	—	C250S50/C
LU400/DX	—	C400S51/C
Standby Longlife High Pressure Sodium Lamps		
Lucalox®	**Lumalux®**	**Ceramalux™**
LU70/SBY/XL	LU70/SBY	C70S62/2
LU100/SBY/XL	LU100/SBY	C100S54/2
LU150/55/SBY/XL	LU150/551SBY	C150S55/2
LU200/SBY/XL	LU200/100/SBY	—
LU250/SBY/XL	LU250/SBY	C250S50/2
LU400/SBY/XL	LU400/SBY	C400S51/2
LU1000/SBY/XL	LU1000/SBY	C1000S52/2
Ceramic Metal Halide Lamps		
CMH®	**Powerball®**	**MasterColor®**
CMH20/MR16/830/SP	—	—
CMH20/MR16/830/FL	—	—
CMH20/MR16/830/WFL	—	—
CMH39MR16/930/SP	—	—
CMH39MR16/930/FL	—	—
CMH39MR16/930/WFL	—	—
CMH39MR16/942/SP	—	—
CMH39MR16/942/FL	—	—
CMH39MR16/942/WFL	—	—
CMH20/PAR20/SP	—	—

GE Description	Osram/ Sylvania Description	Philips Description
Order This GE Lamp	If you currently use these lamps	
Ceramic Metal Halide Lamps (continued)		
CMH®	**Powerball®**	**MasterColor®**
CMH20/PAR20/FL	—	—
CMH20/PAR30/SP10	MCP20PAR30LN/U/830/SP	—
CMH20/PAR30/SP15	—	—
CMH20/PAR30/FL25	MCP20PAR30LN/U/830/FL	CDM20/PAR30/L/MFL/3K
CMH39/PAR20/830/SP10	MCP39PAR20/U/830/SP	CDM35/PAR20/M/SP3K
CMH39/PAR20/830/FL30	MCP39PAR20/U/830/FL	CDM35/PAR20/M/FL3K
CMH39/PAR20/NSP4K	—	CDM35/PAR20/M/SP/4K
CMH39/PAR20/FL4K	—	CDM35/PAR20/M/FL/4K
CMH39/PAR30L/830/SP10	MCP39PAR30LN/U/830/SP	CDM35/PAR30L/M/SP
CMH39/PAR30L/830/SP15	—	—
CMH39/PAR30L/830/FL25	MCP39PAR30LN/U/830/FL	CDM35/PAR30L/M/FL
CMH39/PAR30LNS4PK	—	—
CMH39/PAR30L/SP4K	—	—
CMH39/PAR30L/FL4K	—	—
CMH70/PAR30L/830/SP15	MCP70PAR30LN/U/830/SP	CDM70/PAR30L/M/SP
CMH70/PAR30L/830/FL40	MCP70PAR30LN/U/830/FL	CDM70/PAR30L/M/FL
CMH70/PAR38/830/SP15	MCP70PAR38/U/830/SP	CDM70/PAR38/SP/3K
CMH70/PAR38/830/FL25	MCP70PAR38/U/830/FL	CDM70/PAR38/FL/3K
CMH70/PAR38/830/WFL	MCP70PAR38/U/830/WFL	CDM70/PAR38/WFL/3K
CMH100/PAR38/830/SP15	MCP100PAR38/U/830/SP	CDM100/PAR38/SP/3K
CMH100/PAR38/830/FL25	MCP100PAR38/U/830/FL	CDM100/PAR38/FL/3K
CMH100/PAR38/830/WFL	MCP100PAR38/U/830/WFL	CDM100/PAR38/WFL/3K
CMH70/U/830/MED	MCP70/U/MED/830	MHC70/U/M/3K
CMH70/C/U/830/MED	MCP70/C/U/MED/830	MHC70/C/U/M/3K
CMH100/U/830/MED	MCP100/U/MED/830	MHC100/U/M/3K
CMH100/C/U/830/MED	MCP100/C/U/MED/830	MHC100/C/U/M/3K
CMH70/U/830/MED/O	MCP70/U/MED/830	MHC70/U/MP/3K/ALTO
CMH70/C/U/830/MED/O	MCP70/C/U/MED/830	MHC70/C/U/MP/3K/ALTO
CMH70/U/942/MED/O	MCP70/U/MED/940	MHC70/U/MP/4K/ALTO
CMH70/C/U/942/MED/O	MCP70/C/U/MED/940	MHC70/C/U/MP/4K/ALTO
CMH150/U/830/MED/O	MCP150/U/MED/830	MCH150/U/MP/3K/ALTO
CMH150/C/U/830/MED/O	MCP150/C/U/MED/830	MHC150/C/U/MP/3K/ALTO
CMH150/U/942/MED/O	—	MHC150/U/MP/4K/ALTO
CMH150/C/U/942/MED/O	—	MHC150/C/U/MP/4K/ALTO
CMH20/T/U/830/G12	—	—
CMH39/T/U/830/G12	MC39T6/U/G12/830	CDM35/T6/830
CMH39/TC/U/942/G12	MC39T6/U/G12/940	CDM35/T6/842
CMH70/T/U/830/G12	MC70T6/U/G12/830	CDM70/T6/830
CMH70/T/U/942/G12	MC70T6/U/G12/940	CDM70/T6/942
CMH150/T/U/830/G12	MC150T6/U/G12/830	CDM150/T6/830
CMH150/T/U/942/G12	MC150T6/U/G12/940	CDM150/T6/942
CMH70/TD/830/Rx7s	MC70T6/DE/830	CDM70/TD/830
CMH70/TD/942/Rx7s	—	CDM70/TD/942
CMH150/TD/830/Rx7s	MC150T6/DE/830	CDM150/TD/830
CMH150/TD/942/Rx7s	—	CDM150/TD/942
CMH250/V/PA/O	MCP250/PS/BU only	CDM250/V/O/PS/4K
CMH250C/V/PA/O	MCP250/C/PS/BU only	CDM250/C/V/O/PS/4K
CMH320/V/PA/O	MCP320/PS/BU only	CDM320/V/O/PS/4K
CMH320C/V/PA/O	MCP320/C/PS BU only	CDM320/C/V/O/PS/4K
CMH350/V/PA/O	—	CDM350/V/O/PS/4K
CMH350C/V/PA/O	—	CDM350/C/V/O/PS/4K
CMH400/V/PA/O	—	CDM400/V/O/PS/4K
CMH400C/V/PA/O	—	CDM400/C/V/O/PS/4K
CMH20/T/C/U/830/GU6.5	—	—
CMH39T/U930GU6.5	—	—
CMH39T/U942GU6.5	—	—
CMH20/TC/U/830/G8.5	MC20TC/U/G8.5/830	—
CMH39/TC/U/830/G8.5	MC39TC/U/G8.5/830	CDM35/TC/830
CMH39/TC/U/942/G8.5	MC39TC/U/G8.5/942	CDM35/TC/942
CMH70/TC/U/830/G8.5	MC70TC/U/G8.5/830	CDM70/TC/830
CMH70/TC/U/942/G8.5	MC70TC/U/G8.5/942	CDM70/TC/942
CMH250/U/830/R		CDM250S50/V/O/4K
CMH400/U/830/R		CDM400S51/V/O/4K

Cross-Reference (continued)

GE Description	Osram/ Sylvania Description	Philips Description
Order This GE Lamp	If you currently use these lamps	
Multi-Vapor® PulseArc® Metal Halide Lamps		
PulseArc®	**MetalArc®**	
MXR32C/VBU	–	–
MXR50/U/MED	MP50/U/MED	MH50/U/M
MXR50/C/U/MED	MP50/C/U/MED	MH50/C/U/M
MXR70/U/MED	MH70/U/MED	MHC70/U/M/3K
MXR70/C/U/MED	MH70/C/U/MED	MHC70/C/U/M/3K
MXR70/U/MED/O	MP70/U/MED	MHC70/C/U/M/3K
MXR70/C/U/MED/O	MP70/C/U/MED	MHC70/C/U/M/3K
MXR100/U/MED	M100/U/MRD	MHC100/U/M/3K
MXR100/C/U/MED	MH100/C/U/MED	MHC100/C/U/M/3K
MVR100/U/MED	MH100/U/4K/MED	MHC100/U/M/4K
MVR100/C/U/MED	–	MHC100/C/U/M/4K
MXR100/U/MED/O	MP100/U/MED	MHC100/U/M/3K
MXR100/C/U/MED/O	MP100/C/U/MED	MHC100/C/U/M/3K
MXR150/U/MED	M150/U/MED	MH150/U/M
MXR150/C/U/MED	M150/C/U/MED	MH150/C/U/M
MVR175/VBU/PA	MS175/PS/BU	MS175/BU/PS
MVR175/C/VBU/PA	MS175/C/PS/BU	–
MVR250/VBU/PA	MS250/PS/BU	MS250/BU/PS
MVR250/C/VBU/PA	MS250/C/PS/BU	–
MVR250/HOR/PA	M250/PS/U	–
MVR320/VBU/HO/PA	MS320/PS/BU	MS320/BU/PS
MVR320/C/VBU/HO/PA	MS320/C/PS/BU-HOR	MS320/C/BU/PS
MPR320/VBU/XHO/PA	MP320/350/PS/BU	MP320/BU/PS
MPR320/C/VBU/XHO/PA	MP320/350/C/PS/BU	MP320/C/BU/PS
MVR320/HOR/PA	M320/PS/BU-HOR	MS320/PS/U
MPR350/VBU/PA	MP320/350/PS/BU	MP350/BU/PS
MPR350/C/VBU/PA	MP320/350/C/PS/BU	MP350/C/BU/PS
MPR400/VBU/XHO/PA	MP350/400/PS/BU	MP400/BU/PS
MPR400/C/VBU/XHO/PA	MP350/400/C/PS/BU	MP400/C/BU/PS
MVR400/HOR/PA	M400/PS/U	MS400/HOR/PS
MVR400/HOR/ED28/PA	M400/PS/U/BT28	–
MVR750/VBU/PA	MS750/PS/BU-HOR/BT37	–
MVR750/C/VBU/PA	MS750/C/PS/BU-HOR/BT37	–
MVR1000/BT37/PA	M1000/PS/U/BT37	MS1000/BU/BT37/PS
Multi-Vapor® Standard Metal Halide Lamps		
Multi-Vapor®	**MetalArc®**	
MVR175/U/MED	M175/U/MED	MH175/U/M
MVR175/C/U/MED	M175/C/U/MED	MH175/C/U/M
MVR175/U	M175/U	MH175/U
MVR175/C/U	M175/C/U	MH175/C/U
MVR175/HOR	MS175/HOR	MS175/HOR
MVR175/C/HOR	MS175/C/HOR	MS175/C/HOR
MVR250/U	M250/U	MH250/U
MVR250/C/U	M250/C/U	MH250/C/U
MVR250/SP30/U	M2503K/BU-only	MH250/3K/BU
MVR250/HOR	MS250/HOR	MS250/HOR
MVR250/C/HOR	MS250/C/HOR	MS250/C/HOR
MVR400/U	M400/U	MH400/U
MVR400/C/U	M400/C/U	MH400/C/U
MVR400/SP30/U	MS400/BU	MH400/3K/U
MVR400/VBU	MS400/BU	MS400/BU
MVR400/VBD	MS400/BD	–
MVR400/C/VBU	MS400/C/BU	MS400/C/BU&
MVR400/C/VBD	MS400/C/BD	–
MVR400/HOR	MS400/HOR	MS400/HOR
MVR400/C/HOR	MS400/C/HOR	MS400/C/HOR
MVR400/SP30/HOR	MS400/3K/HOR	–
MPR400/U	MP400/BU	MP400/U
MPR400/VBU	MP400/BU/BD	–
MVR1000/U	M1000/U	MH1000/U
MVR1000/C/U	M1000/C/U	MH1000/C/U

GE Description	Osram/ Sylvania Description	Philips Description
Order This GE Lamp	If you currently use these lamps	
Multi-Vapor® Standard Metal Halide Lamps (continued)		
Multi-Vapor®	**MetalArc®**	
MVR1000/VBU	MS1000/BU	MS1000/BU
MPR1000/VBU/O	MP1000/BU	MP1000/BU
MVR1500/U/SPORTS	M1500/BU-HOR	MH1500BU
MVR250/HOR/PA	MS250/PS/U	–
MVR320/HOR/PA	MS320/PS/BV-HOR	MS320/PS/U
MVR400/HOR/ED28/PA	M400/PS/U/BT28	–
Safety Metal Halide Lamps		
MVT400/C/VBU	MPT400/C/BU	MHT400/C/U
Mercury Vapor Lamps		
HR40/50DX45-46	H45/46DL-40/50/DX	H46DL-40-50/DX
HR75DX43	H43AV-75/DX	H43AV-75/DX
HR100A38/A23	–	–
HR100DX38/A23	H38AV-100/DX	H38MP-100/DX
HR100A38	H38HT-100	H38HT-100
HR100DX38	H38JA-100/DX	H38JA-100/DX
HR100WDX38	H38JA-100/N	–
HR100RFL38	–	–
HR100RDXFL38	H38BP-100/DX	H38BP-100/DX
HR175A39	H39KB-175	H39KB-175
HR175DX39	H39KC-175/DX	H39KC-175/DX
HT175DX39	H39KC-T175/DX	H39KC-T175
HR175WDX39	H39KC-175/N	–
HR175RFL39	–	H39BM-175
HR175RDXFL39	H39BP-175/DX	H39BP-175/DX
HR250A37	H37KB-250	H37KB-250
HR250DX37	H37KC-250/DX	H37KC-250/DX
HR400A33	H33CD-400	H33CD-400
HR400DX33	H33GL-400/DX	H33GL-400/DX
HR400DX33BT	–	–
HT400DX33	H33GL-T400/DX	H33GL-T400/DX
HR400WDX33	H33GL-400/N	–
HR400RDX33	–	H33DN-400/DX
HR400RDXFL33	–	H33FS-400/DX
HR1000DX34	H34GW-1000/DX	H34GW-1000/DX
HR1000A36	H36GV-1000	H36GV-1000
HR1000DX36	H36GW-1000/DX	H36GW-1000/DX

For the most up-to-date product information, see www.gelighting.com.

Notes

Fluorescent Lamps

Lamp Locator (not drawn to scale)

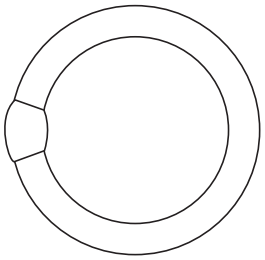

T9 Circline (1-1/8" diameter) 4-Pin Base (G10q)

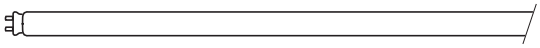

T5 (5/8" diameter) Miniature Bi-Pin Base (G5)

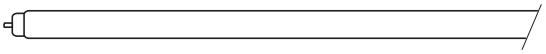

T6 (3/4" diameter) Single Pin Base (Fa8)

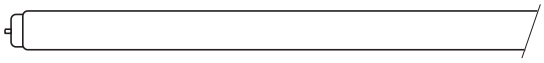

T8 (1" diameter) Single Pin Base (Fa8)

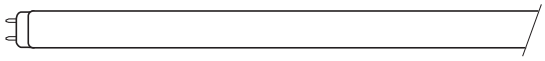

T8 (1" diameter) Medium Bi-Pin Base (G13)

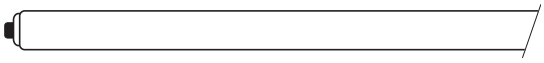

T8 (1" diameter) Recessed Double Contact Base (R17d)

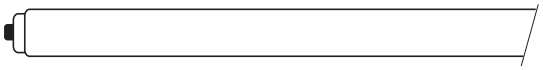

T10 (11/4" diameter) Recessed Double Contact Base (R17d)

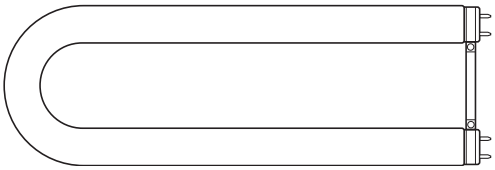

Mod-U-Line® T8/U6 (1" diameter) Medium Bi-Pin Base (G13)

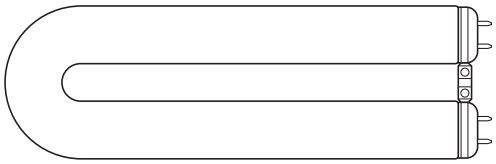

Mod-U-Line® T12/U3 (11/2" diameter) Medium Bi-Pin Base (G13)

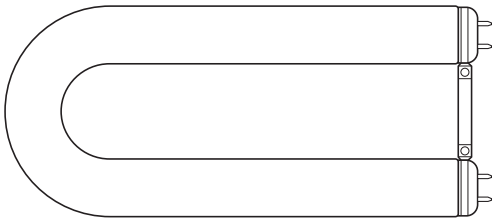

Mod-U-Line® T12/U6 (1-1/2" diameter) Medium Bi-Pin Base (G13)

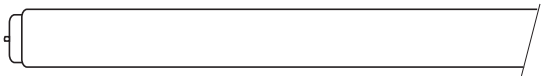

T12 (1-1/2" diameter) Single Pin Base (Fa8)

T12 (1-1/2" diameter) Medium Bi-Pin Base (G13)

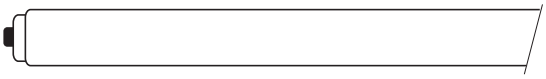

T12 (1-1/2" diameter) Recessed Double Contact Base (R17d)

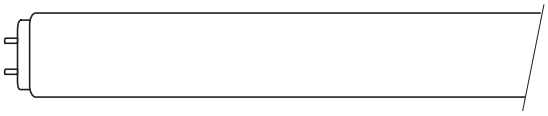

T17 (2-1/8" diameter) Mogul Bi-Pin (G20)

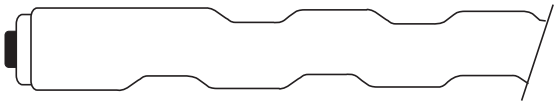

Power Groove® (2-1/8" diameter)
Recessed Double Contact Base (R17d)

Base Identification

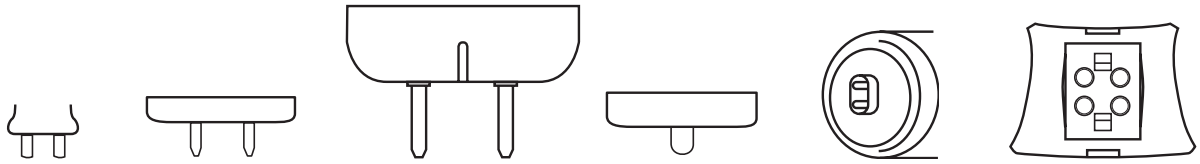

Min BiPin G5 | Med BiPin G13 | Mog BiPin G20 | Single Pin Fa8 | Recessed Double Contact R17d | 4-Pin G10q (Circline)

Introduction

GE introduced the first fluorescent lamp in 1939. Today, these lamps have become almost a universal standard in office and other lighting applications. The characteristics of fluorescent lamps vary widely according to the lamp type. In general, fluorescent lamps have the following advantages:

- **Low Operating Cost:**
  Efficient, fluorescent lamps can cost significantly less to operate over their lifetime than incandescent lamps. Many common linear fluorescent lamps now have energy-saving versions often designated in this catalog by Watt-Miser® (WM).
- **Long Life:**
  Life ratings for fluorescent lamps range from 36,000 to 55,000 hours based on the industry standard of 3 burning hours per start, except where noted.
- **Light Quality:**
  GE Starcoat® T5 and T8 lamps offer higher color rendering and lumen maintenance of 92%-95%.
- **Flexibility:**
  Fluorescent lamps are available in a wide range of sizes, shapes, color performance, and wattage ratings.
- **Fast Starting:**
  Rapid Start and Instant Start lamps typically start within 1 second of being turned on.

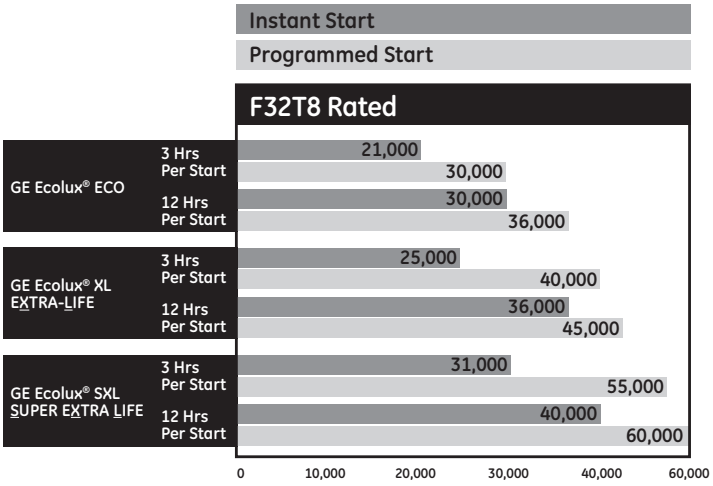

Life ratings are based on engineering data on programmed start ballasts with lamps cycled every 3 operating hours.

GE	OSRAM/SYLVANIA	PHILIPS
Aquarium/Terrarium	—	—
Chroma 50	Design 50®	Colortone 50
covRguard®	—	Tuff Away®
Ecolux®	Ecologic	Alto
Gro & Sho™/Plant & Aquarium	GRO-LUX®	Agro-Lite
Kitchen and Bath ULTRA™	Interior Design® (D30)	Softone Pastel FL (SPEC 30)
Mod-U-Line®	Curvalume®	U-Bent
Power Groove®	—	—
Specification Series (SP)	Designer® Series (D)	SPEC Series
Specification Series (SPX)	Designer® "800" Series	Ultralume™
Starcoat®	—	—
T5	Pentron®	Silhouette™
T8	Octron®	TL70/TL80™
T10/1500MA	VHO/LT	—
/1500	VHO	VHO
Watt-Miser®	SuperSaver®	Econ-o-Watt
Watt-Miser® Plus	SuperSaver Plus®	—
XL	XP	Plus

ATTENTION: This brand-name cross-reference chart is provided only as a quick reference. Other lamp company brand listings may only represent a near equivalent, versus an identical match to GE Lighting brands. Individual lamp manufacturers' performance specifications and product offerings should be consulted. Lamp performance may be affected by environmental conditions, ballast type and/or other auxiliary equipment.

See www.gelighting.com e-Catalog for a comprehensive cross-reference tool.

Product Information

GE T5 Starcoat® Ecolux® Lamps (pg 4-8)

- Used in a variety of applications from indirect fixtures in commercial office buildings to warehouses and manufacturing facilities
- Many combinations of wattage and length provide flexibility of fixture design and ceiling layout
- Longer rated life at 30,000 hours
- TCLP compliant, lowering disposal costs where applicable (state regulations vary, consult your state EPA)

GE Ultra Energy Saving T5 Lamps (pg 4-8 to 4-9)

- High Output Watt-Miser®: Over 5% energy savings versus standard Starcoat® T5 HO lamps. Same lumen output. Great for use in high-bay systems.
- High Efficiency Watt-Misers®: Over 5% energy savings versus standard Starcoat® T5 HE lamps. Same lumen output. Available in four different lengths.
- High Lumen T5: 5% greater lumen output versus standard Starcoat® F28WT5 lamps. Same wattage. Great for new commercial troffers.
- Excellent color rendering – 85 CRI
- TCLP compliant, lowering disposal costs where applicable (state regulations vary, consult your state EPA).

GE Ultra Energy Saving Ecolux® T5 High Output 47 Watt Watt-Miser® (pg 4-9)

- GE's highest efficiency and lowest wattage T5 HO combination at 102 LPW
- Relamp existing full wattage 54W lamp with the 47W T5 lamp and saves energy
- TCLP compliant, lowering disposal costs where applicable (state regulations vary, consult your state EPA)

GE T8 Starcoat® Ecolux® Lamps (pgs 4-9 to 4-10)

- More light over life – 94-95% lumen maintenance
- Enhanced color rendering...available in 700 and 800 series
- High system efficiency, relative to T12, delivers significant energy cost savings
- TCLP Compliant, lowering disposal costs where applicable (state regulations vary, consult your state EPA)

GE Starcoat® Ecolux® XL Extra-Life and SXL Super Long Life lamps (pgs 4-9 to 4-10)

- Same great features of the T8 Starcoat® Ecolux®...with longer life... up to 67% longer than standard T8 lamps

GE Ultra Energy Saving T8 Lamps 2ft and 3ft T8 Watt-Misers® (pg 4-10 to 4-11)

- Energy-saving alternative to standard 2ft and 3ft T8 lamps. Up to 12% energy savings versus standard F17T8 and/or F25T8 lamps, with approximately 10% light loss.
- Excellent color rendering – 80+ CRI
- TCLP compliant, lowering disposal costs where applicable (state regulations vary, consult your state EPA).

GE Ultra Energy Saving T8 Lamps 4ft T8 25 Watt Lamp (pg 4-11)

- Lowest wattage 4ft T8 currently available.
- Longer rated life at 50,000 hours depending on ballast type and burn cycle
- Operates on any ANSI compliant T8 Instant Start or Programmed Start ballast; also approved on GE UltraStart® PRS ballast
- Excellent color rendering – 80+ CRI
- TCLP compliant, lowering disposal costs where applicable (state regulations vary, consult your state EPA)
- Approximately 10% less light

GE Ultra Energy Saving T8 Lamps T8 28W UltraMax® (pg 4-11)

- Highly efficient T8 system utilizing the new 28W T8 lamp designed for optimal use on the GE UltraMax® ballast product family
- Operates on any ANSI compliant T8 Instant Start or Programmed Start ballast
- Also approved for use on GE UltraStart® PRS ballast
- 80+ CRI (Color Rendering Index) and TCLP compliant
- Approximately 4% less light

GE Ultra Energy Saving T8 Lamps T8 32W High Lumen Lamps (HL) (pg 4-11)

- 5-8% more lumens than GE 32W T8 SP and SPX
- 3100 initial lumens allows you to increase light levels over a standard T8 or the option to implement a de-lamp or de-fixture strategy
- 33% longer life over GE F32T8
- 80+ CRI (Color Rendering Index) and TCLP compliant

GE 8' T8 Lamps (pg 4-11 to 4-12)

- Single-pin based lamps designed to operate on Instant Start Ballast

GE 8' T8 Watt-Miser® Plus and 49W Energy Saving Lamps (pg 4-11)

- One of the most efficient fluorescent products available, up to 107 LPW
- Energy savings...8.5% to 17% less energy consumed than standard F96T8 lamps
- Watt-Miser® Plus has same light output as standard lamps; 49W is approximately 14% less light
- Excellent color rendering — 80+ CRI
- Watt-Miser® Plus lamp reduces wattage to 54W per lamp

GE 8' T8 High Output Lamps (pg 4-12)

- High system efficiency delivers 38% energy cost savings
- 50% longer life than T12 high output lamps
- Wide choice of color options
- Operate at 400mA

Product Information (continued)

GE T8 Mod-U-Line® U-Shaped Fluorescent Lamps (pg 4-12)

- Primarily used in 2x2 fixtures with prismatic or parabolic lenses
- Lower energy cost…36% energy cost savings vs. F40T12 U-Tubes
- New Watt-Miser® version saves even more money!
- Longer lamp life than T12 Mod-U-Line® – 20,000 hours
- 700 and 800 Series

GE Energy Saving Mod-U-Line® U-Shaped Fluorescent Lamps (pg 4-12)

- Primarily used in 2x2 fixtures with prismatic or parabolic lenses
- Relamp existing F31T8 Mod-U-Line® with F29T8 or F26T8 Mod-U-Line® and save up to 16% in energy
- Longer lamp life than T12 Mod-U-Line® – 24,000 hours
- Approximately 8 to 17% less light

GE 4' T12 Watt-Miser® Ecolux® Energy Saving Lamps (WM) (pg 4-14)

- Energy-saving replacement for all standard T12 fluorescent lamps
- 12% to 20% savings in energy costs vs. standard fluorescent with approximately 15% light loss
- TCLP compliant, lowering disposal costs where applicable (state and local regulations vary, consult your state EPA)

GE T12 High Output Lamps (pg 4-15 to 4-16)

- High light output and long life
- Produces about 45% more initial lumens than standard lamps of the same size
- Usually operated at 800mA

GE T12 Very High Output Lamps (pg 4-16)

- Where high light levels are required – factories, warehouses, gymnasiums, open areas
- Rapid Start, operated at 1500mA

covRguard® Shatter Resistant Fluorescent Lamps (pg 4-17)

- Polycarbonate shield helps to contain shattered glass particles if lamp is broken, protecting people, food and other valuable items
- UV-blocking properties guard against fading and UV degradation
- Available in a variety of colors for decorative and architectural applications

GE Cold-Temperature Lamps (pg 4-19)

- Specifically designed for cold-temperature applications such as freezers and coolers, display cases and outdoor areas
- Available in T5, T8, T10 and T12 versions
- Rated nominal watts and initial lumens are peak values. Actual watt and lumen values may be somewhat lower in service, depending on ambient conditions.

GE Appliance Lamps (pg 4-20)

- Designed for intermittent service in appliances such as oven hoods and microwaves

GE Blacklight/Blacklight Blue Lamps (pg 4-20)

- Blacklight (BL) lamps are commonly used in insect traps
- Blacklight Blue (BLB) lamps are often used decoratively in disco lighting and theatrical applications. These lamps are produced with a special dark blue glass that filters most visible light.

GE Gold Lamps (pg 4-21)

- Effectively blocks all UV emissions below 520nm
- Available in covRguard®
- Used in photo-sensitive applications such as semi-conductor assembly and darkrooms

GE Germicidal Lamps (pg 4-21)

- Clear lamps with special UV transmitting glass
- The 254nm radiation from appropriately designed and installed devices using the lamps can inactivate many forms of bacteria and other organisms
- Used in air, water and surface purification devices

Headings in this catalog section

The following terms and descriptions can help you when checking Fluorescent lamp specifications and when ordering products. Within each product line, lamps are divided into families, within these families, lamps are then listed by wattage, then bulb, and then by base. There are exceptions to this ordering among the specialty lamps listed.

Order Code:
It is important to use this five-digit code when ordering to ensure that you receive the exact product you require.

Nominal Length (in):
Lamp length including base and/or pins.

Watts:
Energy used (as defined by FTC Lamp Label Rules). To estimate energy consumption (kWh), multiply watts x hours of use and divide by 1000.

Bulb Shape:
Bulb shape followed by its size (the maximum diameter of the bulb expressed in eighths of an inch).

Base:
The type of base.

Description:
The lamp's identification code.

Case Quantity:
Number of product units packed in a case.

Rated Life – Hours:
Lamp burning hours to median life expectancy.

Initial Lumens:
Lamp light output after the initial 100 hours of operation.

Mean Lumens:
Lamp light output at 40% of rated lamp life or 8K hours for lamps exceeding 20K hours life.

Color Temperature Kelvins (K):
A measure of the visual "warmth" or "coolness" of the light from the lamp. The higher the value, the whiter or "cooler" the light appears.

Color Rendering Index (CRI or R_a):
An indication of the ability of the lamp to render object colors in a normal, natural way. The higher the number (0-100), the better the color appearance.

High Color Rendering:
Indicates that this is a lamp with high color rendering, which helps objects and persons illuminated to appear more true to life.

Reduced Wattage:
Indicates that this is a reduced wattage option for lamps normally used in this application. Be sure to check wattage, lumens and life to determine which lamp is best suited to your needs.

Footnotes:
Related footnotes, see page 4-26

Warning and Caution Notices:
See page 4-27 for more information.

Additional Information:
Typical application and/or other important information.

Bulb Shape	Base	Watts	Nominal Length (in)	Order Code	Description	Case Qty	Rated Life (3hr/ Start)	Rated Life (12hr/ Start)	Initial Lumens	Mean Lumens	Color Temp K	CRI	High Color Rendering	Energy Savings	Reduced Wattage	Footnotes	Warning and Caution Notices	Additional Information
T5 Starcoat Ecolux® Lamps																		
High Efficiency																		
T5	Miniature Bi-Pin (G5)	14	21.6	31590	F14W/T5/830/ECO	40	30000	36000	1350	1240	3000	85	✐			19	101	

F 14W/T5/830 / ECO

- F — Identifies as Fluorescent lamp.
- 14W — Identifies either the lamp's wattage or its length in inches.
- T5 — Identifies the lamp shape and the bulb diameter in eighths of an inch.
- 830 — Identifies the lamp finish or color.
- ECO — Identifies TCLP compliance.

WHEN YOU DON'T KNOW THE LAMP DESCRIPTION

1. Identify bulb shape by using table on page 4-3.
2. Measure bulb diameter using ruler in Appendix section page D-1 to determine width in eighths of an inch.
3. Identify base type using table on page 4-4.
4. Find your lamp in the table containing the bulb shape, size and base.

Fluorescent Lamps

Bulb Shape	Base	Watts	Nominal Length (in)	Order Code	Description	Case Qty	Rated Life (3hr/ Start)	Rated Life (12hr/ Start)	Initial Lumens	Mean Lumens	Color Temp K	CRI	High Color Rendering	Energy Savings	Reduced Wattage	Footnotes	Warning and Caution Notices	Additional Information
T5 Starcoat® Ecolux® Lamps																		
T5 High Efficiency																		
T5	Miniature Bi-Pin (G5)	14	21.6	31590	F14W/T5/830/ECO	40	30000	36000	1350	1240	3000	85	✐			19	101	
		14	21.6	46671	F14W/T5/835/ECO	40	30000	36000	1350	1240	3500	85	✐			19	101	
		14	21.6	46673	F14W/T5/841/ECO	40	30000	36000	1350	1240	4100	85	✐			19	101	
		14	21.6	46674	F14W/T5/850/ECO	40	30000	36000	1300	1190	5000	85	✐			19	101	
		14	21.6	46676	F14W/T5/865/ECO	40	30000	36000	1250	1150	6500	85	✐			19	101	
		21	33.4	46677	F21W/T5/830/ECO	40	30000	36000	2100	1930	3000	85	✐			19	101	
		21	33.4	46684	F21W/T5/835/ECO	40	30000	36000	2100	1930	3500	85	✐			19	101	
		21	33.4	46687	F21W/T5/841/ECO	40	30000	36000	2100	1930	4100	85	✐			19	101	
		21	33.4	46688	F21W/T5/850/ECO	40	30000	36000	2000	1840	5000	85	✐			19	101	
		21	33.4	46689	F21W/T5/865/ECO	40	30000	36000	1950	1790	6500	85	✐			19	101	
		28	45.2	46704	F28W/T5/830/ECO	40	30000	36000	2900	2660	3000	85	✐			19	101	
		28	45.2	46705	F28W/T5/835/ECO	40	30000	36000	2900	2660	3500	85	✐			19	101	
		28	45.2	46706	F28W/T5/841/ECO	40	30000	36000	2900	2660	4100	85	✐			19	101	
		28	45.2	46707	F28W/T5/850/ECO	40	30000	36000	2750	2530	5000	85	✐			19	101	
		28	45.2	46708	F28W/T5/865/ECO	40	30000	36000	2700	2480	6500	85	✐			19	101	
		35	57.1	46724	F35W/T5/830/ECO	40	30000	36000	3650	3350	3000	85	✐			19	101	
		35	57.1	46727	F35W/T5/835/ECO	40	30000	36000	3650	3350	3500	85	✐			19	101	
		35	57.1	46735	F35W/T5/841/ECO	40	30000	36000	3650	3350	4100	85	✐			19	101	
		35	57.1	46742	F35W/T5/850/ECO	40	30000	36000	3500	3220	5000	85	✐			19	101	
		35	57.1	46743	F35W/T5/865/ECO	40	30000	36000	3400	3120	6500	85	✐			19	101	
T5 High Output																		
T5	Miniature Bi-Pin (G5)	24	21.6	46699	F24W/T5/830/ECO	40	30000	36000	2000	1840	3000	85	✐			19	101	
		24	21.6	46700	F24W/T5/835/ECO	40	30000	36000	2000	1840	3500	85	✐			19	101	
		24	21.6	46701	F24W/T5/841/ECO	40	30000	36000	2000	1840	4100	85	✐			19	101	
		24	21.6	46702	F24W/T5/850/ECO	40	30000	36000	1900	1740	5000	85	✐			19	101	
		24	21.6	46703	F24W/T5/865/ECO	40	30000	36000	1880	1740	6500	85	✐			19	101	
		39	33.4	46744	F39W/T5/830/ECO	40	30000	36000	3500	3220	3000	85	✐			19	101	
		39	33.4	46745	F39W/T5/835/ECO	40	30000	36000	3500	3220	3500	85	✐			19	101	
		39	33.4	46746	F39W/T5/841/ECO	40	30000	36000	3500	3220	4100	85	✐			19	101	
		39	33.4	46747	F39W/T5/850/ECO	40	30000	36000	3350	3080	5000	85	✐			19	101	
		39	33.4	46748	F39W/T5/865/ECO	40	30000	36000	3330	3060	6500	85	✐			19	101	
		54	45.2	46759	F54W/T5/830/ECO	40	30000	36000	5000	4600	3000	85	✐			19	101	
		54	45.2	46760	F54W/T5/835/ECO	40	30000	36000	5000	4600	3500	85	✐			19	101	
		54	45.2	46761	F54W/T5/841/ECO	40	30000	36000	5000	4600	4100	85	✐			19	101	
		54	45.2	46762	F54W/T5/850/ECO	40	30000	36000	4800	4410	5000	85	✐			19	101	
		54	45.2	46763	F54W/T5/865/ECO	40	30000	36000	4750	4370	6500	85	✐			19	101	
		80	57.1	46802	F80W/T5/830/ECO	40	30000	36000	7000	6440	3000	85	✐			19	101	
		80	57.1	46803	F80W/T5/835/ECO	40	30000	36000	7000	6440	3500	85	✐			19	101	
		80	57.1	46804	F80W/T5/841/ECO	40	30000	36000	7000	6440	4100	85	✐			19	101	
		80	57.1	46805	F80W/T5/850/ECO	40	30000	36000	6700	6160	5000	85	✐			19	101	
		80	57.1	46806	F80W/T5/865/ECO	40	30000	36000	6650	6110	6500	85	✐			19	101	
T5 High Output Extra-Life																		
T5	Miniature Bi-Pin (G5)	54	45	68836	F54T5/XL/830/ECO	40	50000	60000	5000	4600	3000	84	✐			19	101	
		54	45	68837	F54T5/XL/835/ECO	40	50000	60000	5000	4600	3500	84	✐			19	101	
		54	45	68838	F54T5/XL/841/ECO	40	50000	60000	5000	4600	4100	84	✐			19	101	
		54	45	68839	F54T5/XL/850/ECO	40	50000	60000	4800	4410	5000	84	✐			19	101	
		54	45	68840	F54T5/XL/865/ECO	40	50000	60000	4750	4370	6500	84	✐			19	101	
Ultra Energy Saving T5 Lamps																		
T5 High Efficiency Watt-Miser®																		
T5	Miniature Bi-Pin (G5)	13	21.6	71632	F14T5/830/WM/ECO	40	25000	30000	1350	1240	3000	85	✐	$	✈	19	101	
		13	21.6	71633	F14T5/835/WM/ECO	40	25000	30000	1350	1240	3500	85	✐	$	✈	19	101	
		13	21.6	71634	F14T5/841/WM/ECO	40	25000	30000	1350	1240	4100	85	✐	$	✈	19	101	
		13	21.6	71635	F14T5/850/WM/ECO	40	25000	30000	1300	1190	5000	85	✐	$	✈	19	101	
		13	21.6	71636	F14T5/865/WM/ECO	40	25000	30000	1250	1150	6500	85	✐	$	✈	19	101	
		20	33.4	71637	F21T5/830/WM/ECO	40	25000	30000	2100	1930	3000	85	✐	$	✈	19	101	
		20	33.4	71638	F21T5/835/WM/ECO	40	25000	30000	2100	1930	3500	85	✐	$	✈	19	101	
		20	33.4	71639	F21T5/841/WM/ECO	40	25000	30000	2100	1930	4100	85	✐	$	✈	19	101	
		20	33.4	71640	F21T5/850/WM/ECO	40	25000	30000	2000	1840	5000	85	✐	$	✈	19	101	
		20	33.4	71641	F21T5/865/WM/ECO	40	25000	30000	1950	1790	6500	85	✐	$	✈	19	101	
		26	45.2	71642	F28T5/830/WM/ECO	40	25000	30000	2900	2660	3000	85	✐	$	✈	19	101	
		26	45.2	71643	F28T5/835/WM/ECO	40	25000	30000	2900	2660	3500	85	✐	$	✈	19	101	
		26	45.2	71644	F28T5/841/WM/ECO	40	25000	30000	2900	2660	4100	85	✐	$	✈	19	101	

For the most up-to-date product information, see www.gelighting.com. To convert inches to millimeters, multiply by 25.4.
All footnotes, warning and caution notices found at the end of this section (page 4-26).

Bulb Shape	Base	Watts	Nominal Length (in)	Order Code	Description	Case Qty	Rated Life (3hr/ Start)	Rated Life (12hr/ Start)	Initial Lumens	Mean Lumens	Color Temp K	CRI	High Color Rendering	Energy Savings	Reduced Wattage	Footnotes	Warning and Caution Notices	Additional Information
Ultra Energy Saving T5 Lamps (continued)																		
T5 High Efficiency Watt-Miser® (continued)																		
T5	Miniature Bi-pin (G5)	26	45.2	71645	F28T5/850/WM/ECO	40	25000	30000	2750	2530	5000	85	✐	$	☛	19	101	
		26	45.2	71646	F28T5/865/WM/ECO	40	25000	30000	2700	2480	6500	85	✐	$	☛	19	101	
		33	57.1	71647	F35T5/830/WM/ECO	40	25000	30000	3650	3350	3000	85	✐	$	☛	19	101	
		33	57.1	71648	F35T5/835/WM/ECO	40	25000	30000	3650	3350	3500	85	✐	$	☛	19	101	
		33	57.1	71649	F35T5/841/WM/ECO	40	25000	30000	3650	3350	4100	85	✐	$	☛	19	101	
		33	57.1	71650	F35T5/850/WM/ECO	40	25000	30000	3500	3220	5000	85	✐	$	☛	19	101	
		33	57.1	71651	F35T5/865/WM/ECO	40	25000	30000	3400	3120	6500	85	✐	$	☛	19	101	
T5 High Output Watt-Miser®																		
T5	Miniature Bi-Pin (G5)	51	45.2	71627	F54T5/830/WM/ECO	40	30000	36000	5000	4600	3000	85	✐	$	☛	19	101	
		51	45.2	71628	F54T5/835/WM/ECO	40	30000	36000	5000	4600	3500	85	✐	$	☛	19	101	
		51	45.2	71629	F54T5/841/WM/ECO	40	30000	36000	5000	4600	4100	85	✐	$	☛	19	101	
		51	45.2	71630	F54T5/850/WM/ECO	40	30000	36000	4790	4410	5000	85	✐	$	☛	19	101	
		51	45.2	71631	F54T5/865/WM/ECO	40	30000	36000	4750	4370	6500	85	✐	$	☛	19	101	
T5 High Output 47W Watt-Miser®																		
T5	Miniature Bi-Pin (G5)	47	45.2	62020	F54T5/47W/830/ECO	40	30000	36000	4800	4410	3000	84	✐	$	☛	19	101	
		47	45.2	62021	F54T5/47W/835/ECO	40	30000	36000	4800	4410	3500	84	✐	$	☛	19	101	
		47	45.2	62022	F54T5/47W/841/ECO	40	30000	36000	4800	4410	4100	84	✐	$	☛	19	101	
		47	45.2	62023	F54T5/47W/850/ECO	40	30000	36000	4600	4230	5000	84	✐	$	☛	19	101	
		47	45.2	62024	F54T5/47W/865/ECO	40	30000	36000	4550	4180	6500	84	✐	$	☛	19	101	
T5 High Lumen																		
T5	Miniature Bi-Pin (G5)	28	45.2	71652	F28WT5/830/HL/ECO	40	20000	24000	3050	2810	3000	85	✐	$		19	101	
		28	45.2	71653	F28WT5/835/HL/ECO	40	20000	24000	3050	2810	3500	85	✐	$		19	101	
		28	45.2	71654	F28WT5/841/HL/ECO	40	20000	24000	3050	2810	4100	85	✐	$		19	101	
		28	45.2	71655	F28WT5/850/HL/ECO	40	20000	24000	2900	2670	5000	85	✐	$		19	101	
		28	45.2	71656	F28WT5/865/HL/ECO	40	20000	24000	2850	2620	6500	85	✐	$		19	101	
T5 Preheat Lamps																		
6" T5																		
T5	Miniature Bi-Pin (G5)	4	6.0	10004	F4T5/CW	24	5000		135	100	4100	60					101	
		4	6.0	15983	F4T5/CW/CB	10	5000		135	100	4100	60					101	
		4	6.0	29089	F4T5/WW/CB	10	5000		140	105	3000	52					101	
9" T5																		
T5	Miniature Bi-Pin (G5)	6	9.0	10032	F6T5/CW	24	5000		295	235	4100	60					101	
		6	9.0	15986	F6T5/CW/CB	10	5000		295	235	4100	60					101	
		6	9.0	90062	F6T5/XL/CW	24	8000		260	210	4100	60					101	
		6	9.0	10028	F6T5/D	24	5000		230	185	6500	75					101	
12" T5																		
T5	Miniature Bi-Pin (G5)	8	12.0	10059	F8T5/CW	24	5000		400	320	4100	60					101	
		8	12.0	15987	F8T5/CW/CB	10	5000		400	320	4100	60					101	
		8	12.0	90063	F8T5/XL/CW	24	8000		400	320	4100	60					101	
		8	12.0	10055	F8T5/D	24	5000		330	265	6500	75					101	
		8	12.0	10064	F8T5/WW	24	5000		410	330	3000	52					101	
		8	12.0	25425	F8T5/WW/CB	5	5000		410	330	3000	52					101	
21" T5																		
T5	Miniature Bi-Pin (G5)	13	21.0	10086	F13T5/CW	24	5000		850	705	4100	60					101	
		13	21.0	49333	F13T5/CW/CB	5	5000		850	705	4100	60					101	
		13	21.0	90064	F13T5/XL/CW	24	8000		830	690	4100	60					101	
		13	21.0	10089	F13T5/WW	24	5000		870	720	3000	52					101	
		13	21.0	25426	F13T5/WW/CB	5	5000		870	720	3000	52					101	
T8 Starcoat® Lamps																		
2' T8 Ecolux®																		
T8	Medium Bi-Pin (G13)	17	24.0	45741	F17T8/SP30/ECO	24	30000	36000	1325	1260	3000	78				18,20	101	
		17	24.0	45743	F17T8/SP35/ECO	24	30000	36000	1325	1260	3500	78				18,20	101	
		17	24.0	45748	F17T8/SP41/ECO	24	30000	36000	1325	1260	4100	78				18,20	101	
		17	24.0	45742	F17T8/SPX30/ECO	24	30000	36000	1350	1280	3000	85	✐			18,20	101	
		17	24.0	45747	F17T8/SPX35/ECO	24	30000	36000	1350	1280	3500	85	✐			18,20	101	
		17	24.0	45749	F17T8/SPX41/ECO	24	30000	36000	1350	1280	4100	85	✐			18,20	101	
2' T8 Ecolux® XL Extra-life																		
T8	Medium Bi-Pin (G13)	17	24.0	15476	F17T8/XL/SP30/ECO	24	40000	45000	1325	1260	3000	78				18,20	101	
		17	24.0	15479	F17T8/XL/SP35/ECO	24	40000	45000	1325	1260	3500	78				18,20	101	
		17	24.0	15480	F17T8/XL/SP41/ECO	24	40000	45000	1325	1260	4100	78				18,20	101	
		17	24.0	15481	F17T8/XL/SPX30/ECO	24	40000	45000	1350	1280	3000	85	✐			18,20	101	

For the most up-to-date product information, see www.gelighting.com. To convert inches to millimeters, multiply by 25.4.
All footnotes, warning and caution notices found at the end of this section (page 4-26).

Bulb Shape	Base	Watts	Nominal Length (in)	Order Code	Description	Case Qty	Rated Life (3hr/ Start)	Rated Life (12hr/ Start)	Initial Lumens	Mean Lumens	Color Temp K	CRI	High Color Rendering	Energy Savings	Reduced Wattage	Footnotes	Warning and Caution Notices	Additional Information
T8 Starcoat® Lamps (continued)																		
2' T8 Ecolux® XL Extra-life (continued)																		
T8	Medium Bi-Pin (G13)	17	24.0	15483	F17T8/XL/SPX35/ECO	24	40000	45000	1350	1280	3500	85	✐			18,20	101	
		17	24.0	15484	F17T8/XL/SPX41/ECO	24	40000	45000	1350	1280	4100	85	✐			18,20	101	
		17	24.0	10415	F17T8/XL/SPX50/ECO	24	40000	45000	1300	1235	5000	82	✐			18,20	101	
		17	24.0	16092	F17T8/XL/SPX65/ECO	24	40000	45000	1250	1125	6500	78	✐			18,20	101	
2' T8 Ecolux® 17 Watt Super Long Life																		
T8	Medium Bi-Pin (G13)	17	24.0		F17T8/SXL/SPX35/ECO	24	55000	57000			3500	85	✐			18, 21	101	
		17	24.0		F17T8/SXL/SPX41/ECO	24	55000	57000			4100	85	✐			18, 21	101	
		17	24.0		F17T8/SXL/SPX50/ECO	24	55000	57000			5000	82	✐			18, 21	101	
3' T8 Ecolux®																		
T8	Medium Bi-Pin (G13)	25	36.0	45750	F25T8/SP30/ECO	24	30000	36000	2080	1970	3000	78				18,20	101	
		25	36.0	45754	F25T8/SP35/ECO	24	30000	36000	2080	1970	3500	78				18,20	101	
		25	36.0	45756	F25T8/SP41/ECO	24	30000	36000	2080	1970	4100	78				18,20	101	
		25	36.0	45753	F25T8/SPX30/ECO	24	30000	36000	2150	2040	3000	85	✐			18,20	101	
		25	36.0	45755	F25T8/SPX35/ECO	24	30000	36000	2150	2040	3500	85	✐			18,20	101	
		25	36.0	45757	F25T8/SPX41/ECO	24	30000	36000	2150	2040	4100	85	✐			18,20	101	
3' T8 Ecolux® XL Extra-life																		
T8	Medium Bi-Pin (G13)	25	36.0	15486	F25T8/XL/SP30/ECO	24	40000	45000	2080	1970	3000	78				18,20	101	
		25	36.0	15487	F25T8/XL/SP35/ECO	24	40000	45000	2080	1970	3500	78				18,20	101	
		25	36.0	15488	F25T8/XL/SP41/ECO	24	40000	45000	2080	1970	4100	78				18,20	101	
		25	36.0	15489	F25T8/XL/SPX30/ECO	24	40000	45000	2150	2040	3000	85	✐			18,20	101	
		25	36.0	15490	F25T8/XL/SPX35/ECO	24	40000	45000	2150	2040	3500	85	✐			18,20	101	
		25	36.0	15491	F25T8/XL/SPX41/ECO	24	40000	45000	2150	2040	4100	85	✐			18,20	101	
		25	36.0	10416	F25T8/XL/SPX50/ECO	24	40000	45000	2050	1950	5000	82	✐			18,20	101	
		25	36.0	16314	F25T8/XL/SPX65/ECO	24	40000	45000	1950	1755	6500	78	✐			18,20	101	
3' T8 Ecolux® 25 Watt Super Long Life																		
T8	Medium Bi-Pin (G13)	25	36.0		F25T8/SXL/SPX35/ECO	24	55000	57000			3500	85	✐			18, 21	101	
		25	36.0		F25T8/SXL/SPX41/ECO	24	55000	57000			4100	85	✐			18, 21	101	
		25	36.0		F25T8/SXL/SPX50/ECO	24	55000	57000			5000	82	✐			18, 21	101	
4' T8 Ecolux®																		
T8	Medium Bi-Pin (G13)	32	48.0	66347	F32T8/SPP30/ECO	36	30000	36000	2900	2725	3000	80	✐			18,21	101	
		32	48.0	66348	F32T8/SPP35/ECO	36	30000	36000	2900	2725	3500	80	✐			18,21	101	
		32	48.0	66349	F32T8/SPP41/ECO	36	30000	36000	2900	2725	4100	80	✐			18,21	101	
		32	48.0	66350	F32T8/SPP50/ECO	36	30000	36000	2900	2725	5000	80	✐			18,21	101	
		32	48	66351	F32T8/SPP65/ECO	36	30000	36000	2900	2725	6500	78	✐			18,21	101	
		32	48.0	68850	F32T8/SPX30/ECO2	36	30000	36000	2925	2770	3000	85	✐			18,21	101	
		32	48.0	68851	F32T8/SPX35/ECO2	36	30000	36000	2925	2770	3500	85	✐			18,21	101	
		32	48.0	68852	F32T8/SPX41/ECO2	36	30000	36000	2925	2770	4100	85	✐			18,21	101	
		32	48.0	68853	F32T8/SPX50/ECO2	36	30000	36000	2900	2755	5000	82	✐			18,21	101	
		32	48.0	66342	F32T8/SPX65/ECO2	36	30000	36000	2900	2755	6500	78	✐			18,21	101	
4' T8 Ecolux® XL Extra-life																		
T8	Medium Bi-Pin (G13)	32	48.0	68854	F32T8/XL/SPX30/ECO2	36	40000	45000	2925	2770	3000	85	✐			18,21	101	
		32	48.0	68855	F32T8/XL/SPX35/ECO2	36	40000	45000	2925	2770	3500	85	✐			18,21	101	
		32	48.0	68856	F32T8/XL/SPX41/ECO2	36	40000	45000	2925	2770	4100	85	✐			18,21	101	
		32	48.0	68857	F32T8/XL/SPX50/ECO2	36	40000	45000	2850	2700	5000	82	✐			18,21	101	
		32	48.0	68858	F32T8/XL/SPX65/ECO2	36	40000	45000	2750	2610	6500	78	✐			18,21	101	
4' T8 Ecolux® Super Long Life																		
T8	Medium Bi-Pin (G13)	32	48.0	73093	F32T8/SXL/SPX30/ECO	36	65000	67000	2850	2675	3000	85	✐			18,21	101	
		32	48.0	73094	F32T8/SXL/SPX35/ECO	36	65000	67000	2850	2675	3500	85	✐			18,21	101	
		32	48.0	73095	F32T8/SXL/SPX41/ECO	36	65000	67000	2850	2675	4100	82	✐			18,21	101	
		32	48.0	73096	F32T8/SXL/SPX50/ECO	36	65000	67000	2800	2630	5000	80	✐			18,21	101	
4' T8 Ecolux® High Color Rendering																		
T8	Medium Bi-Pin (G13)	32	48	66343	F32T8/C50/ECO	36	30000	36000	1700	1600	5000	90	✐					Chroma 50
		32	48	66344	F32T8/C75/ECO	36	30000	36000	1700	1600	7500	93	✐					Chroma 75
Ultra Energy Saving T8 Lamps																		
2' T8 Ecolux® Watt-Miser® 15 Watt Lamp																		
T8	Medium Bi-Pin (G13)	15	24.0	72132	F17T8/XL/SPX30/WM/ECO	24	45000	50000	1200	1130	3000	85	✐	$	✈	1,18,20	101	
		15	24.0	72133	F17T8/XL/SPX35/WM/ECO	24	45000	50000	1200	1130	3500	85	✐	$	✈	1,18,20	101	
		15	24.0	72134	F17T8/XL/SPX41/WM/ECO	24	45000	50000	1200	1130	4100	82	✐	$	✈	1,18,20	101	
		15	24.0	72135	F17T8/XL/SPX50/WM/ECO	24	45000	50000	1175	1105	5000	80	✐	$	✈	1,18,20	101	

For the most up-to-date product information, see www.gelighting.com. To convert inches to millimeters, multiply by 25.4.
All footnotes, warning and caution notices found at the end of this section (page 4-26).

Bulb Shape	Base	Watts	Nominal Length (in)	Order Code	Description	Case Qty	Rated Life (3hr/ Start)	Rated Life (12hr/ Start)	Initial Lumens	Mean Lumens	Color Temp K	CRI	High Color Rendering	Energy Savings	Reduced Wattage	Footnotes	Warning and Caution Notices	Additional Information
Ultra Energy Saving T8 Lamps (continued)																		
3' T8 Ecolux® Watt-Miser® 22 Watt Lamp																		
T8	Medium Bi-Pin (G13)	22	36.0	72136	F25T8/XL/SPX30/WM/ECO	24	45000	50000	1925	1810	3000	85	✐	$	⚒	1,18,20	101	
		22	36.0	72137	F25T8/XL/SPX35/WM/ECO	24	45000	50000	1925	1810	3500	85	✐	$	⚒	1,18,20	101	
		22	36.0	72138	F25T8/XL/SPX41/WM/ECO	24	45000	50000	1925	1810	4100	82	✐	$	⚒	1,18,20	101	
		22	36.0	72139	F25T8/XL/SPX50/WM/ECO	24	45000	50000	1900	1785	5000	80	✐	$	⚒	1,18,20	101	
4' T8 Ecolux® 25 Watt Lamp																		
T8	Medium Bi-Pin (G13)	25	48.0	66467	F32T8/25W/SPP35/ECO	36	40000	45000	2500	2350	3500	80	✐	$	⚒	1,18,21	101	CEE Approved
		25	48.0	66468	F32T8/25W/SPP41/ECO	36	40000	45000	2500	2350	4100	80	✐	$	⚒	1,18,21	101	CEE Approved
		25	48.0	66469	F32T8/25W/SPP50/ECO	36	40000	45000	2500	2350	5000	80	✐	$	⚒	1,18,21	101	CEE Approved
		25	48.0	72128	F32T8/25W/SPX30/ECO	36	50000	55000	2500	2350	3000	85	✐	$	⚒	1,18,21	101	CEE Approved
		25	48.0	72129	F32T8/25W/SPX35/ECO	36	50000	55000	2500	2350	3500	85	✐	$	⚒	1,18,21	101	CEE Approved
		25	48.0	72130	F32T8/25W/SPX41/ECO	36	50000	55000	2500	2350	4100	85	✐	$	⚒	1,18,21	101	CEE Approved
		25	48.0	72131	F32T8/25W/SPX50/ECO	36	50000	55000	2500	2350	5000	80	✐	$	⚒	1,18,21	101	CEE Approved
4' T8 Ecolux® 25 Watt Super Long Life																		
T8	Medium Bi-Pin (G13)	25	48.0	93905	F32T825W/SXL/SPX35/ECO	36	80,000	84,000	2,400	2,260	3500	82	✐	$	⚒	18, 21	101	CEE Approved
		25	48.0	93906	F32T825W/SXL/SPX41/ECO	36	80,000	84,000	2,400	2,260	4100	82	✐	$	⚒	18, 21	101	CEE Approved
		25	48.0	93907	F32T825W/SXL/SPX50/ECO	36	80,000	84,000	2,400	2,260	5000	80	✐	$	⚒	18, 21	101	CEE Approved
4' T8 Ecolux® UltraMax® 28 Watt Lamp																		
T8	Medium Bi-Pin (G13)	28	48.0	66471	F28T8/XL/SPP35/ECO	36	40000	45000	2600	2440	3500	80	✐	$	⚒	1,18,21	101	CEE Approved
		28	48.0	66472	F28T8/XL/SPP41/ECO	36	40000	45000	2600	2440	4100	80	✐	$	⚒	1,18,21	101	CEE Approved
		28	48.0	66473	F28T8/XL/SPP50/ECO	36	40000	45000	2600	2440	5000	80	✐	$	⚒	1,18,21	101	CEE Approved
		28	48.0	72863	F28T8/XL/SPX30/ECO	36	45000	50000	2675	2515	3000	85	✐	$	⚒	1,18,21	101	CEE Approved
		28	48.0	72864	F28T8/XL/SPX35/ECO	36	45000	50000	2675	2515	3500	85	✐	$	⚒	1,18,21	101	CEE Approved
		28	48.0	72866	F28T8/XL/SPX41/ECO	36	45000	50000	2675	2515	4100	82	✐	$	⚒	1,18,21	101	CEE Approved
		28	48.0	72867	F28T8/XL/SPX50/ECO	36	45000	50000	2675	2515	5000	80	✐	$	⚒	1,18,21	101	CEE Approved
		28	48.0	66346	F28T8/XL/SPX65/ECO	36	45000	50000	2600	2440	6500	80	✐	$	⚒	1,18,21	101	CEE Approved
4' T8 Ecolux® UltraMax® 28 Watt Super Long Life																		
T8	Medium Bi-Pin (G13)	28	48.0	93902	F28T8/SXL/SPX35/ECO	36	80,000	84,000	2,600	2,440	3500	82	✐	$	⚒	18, 21	101	CEE Approved
		28	48.0	93903	F28T8/SXL/SPX41/ECO	36	80,000	84,000	2,600	2,440	4100	82	✐	$	⚒	18, 21	101	CEE Approved
		28	48.0	93904	F28T8/SXL/SPX50/ECO	36	80,000	84,000	2,600	2,440	5000	80	✐	$	⚒	18, 21	101	CEE Approved
4' T8 Ecolux® High Lumen																		
T8	Medium Bi-Pin (G13)	32	48.0	10327	F32T8/XL/SPX30/HL/ECO	36	40000	45000	3100	2915	3000	85	✐	$		18,21	101	CEE Approved
		32	48.0	10326	F32T8/XL/SPX35/HL/ECO	36	40000	45000	3100	2915	3500	85	✐	$		18,21	101	CEE Approved
		32	48.0	10322	F32T8/XL/SPX41/HL/ECO	36	40000	45000	3100	2915	4100	82	✐	$		18,21	101	CEE Approved
		32	48.0	42556	F32T8/XL/SPX50/HL/ECO	36	40000	45000	3000	2820	5000	80	✐	$		18,21	101	CEE Approved
8' T8 Lamps																		
8' T8 XL Extra-Life																		
T8	Single Pin (Fa8)	59	96.0	67969	F96T8/XL/SPP35	24	24000	30000	5800	5220	3500	80	✐				101	
		59	96.0	67970	F96T8/XL/SPP41	24	24000	30000	5800	5220	4100	80	✐				101	
		59	96.0	67971	F96T8/XL/SPP50	24	24000	30000	5800	5220	5000	80	✐				101	
		59	96.0	68868	F96T8/XL/SPX30/2	24	24000	30000	5950	5650	3000	85	✐				101	
		59	96.0	68869	F96T8/XL/SPX35/2	24	24000	30000	5950	5650	3500	85	✐				101	
		59	96.0	68870	F96T8/XL/SPX41/2	24	24000	30000	5950	5650	4100	85	✐				101	
		59	96.0	68871	F96T8/XL/SPX50/2	24	24000	30000	5950	5650	5000	82	✐				101	
8' T8 XL Extra-Life Watt-Miser® Plus Energy Saving Lamps																		
T8	Single Pin (Fa8)	54	96.0	66891	F96T8/54W/SPP35	24	24000	30000	5250	4900	3500	80	✐	$	⚒	1	101	
		54	96.0	66892	F96T8/54W/SPP41	24	24000	30000	5250	4900	4100	80	✐	$	⚒	1	101	
		54	96.0	47076	F96T8/XL/SP35/WMP	24	24000	30000	5800	5450	3500	85	✐	$	⚒	1	101	
		54	96.0	47103	F96T8/XL/SP41/WMP	24	24000	30000	5800	5450	4100	82	✐	$	⚒	1	101	
		54	96.0	66889	F96T8/XL/SP50/WMP	24	24000	30000	5500	5160	5000	80	✐	$	⚒	1	101	
		54	96.0	66890	F96T8/XL/SP65/WMP	24	24000	30000	5400	5020	6500	78	✐	$	⚒	1	101	
8' T8 49W XL Extra-Life Watt-Miser® Energy Saving Lamps																		
T8	Single Pin (Fa8)	49	96.0	66894	F96T8/49W/SPP35	24	24000	30000	4800	4500	3500	80	✐	$	⚒	1	101	
		49	96.0	66895	F96T8/49W/SPP41	24	24000	30000	4800	4500	4100	80	✐	$	⚒	1	101	
		49	96.0	79401	F96T8/49W/SPX30	24	24000	30000	5000	4700	3000	84	✐	$	⚒	1	101	
		49	96.0	79402	F96T8/49W/SPX35	24	24000	30000	5000	4700	3500	84	✐	$	⚒	1	101	
		49	96.0	79403	F96T8/49W/SPX41	24	24000	30000	5000	4700	4100	83	✐	$	⚒	1	101	

For the most up-to-date product information, see www.gelighting.com. To convert inches to millimeters, multiply by 25.4.
All footnotes, warning and caution notices found at the end of this section (page 4-26).

Bulb Shape	Base	Watts	Nominal Length (in)	Order Code	Description	Case Qty	Rated Life (3 hr/ start)	Rated Life (12 hr/ start)	Initial Lumens	Mean Lumens	Color Temp K	CRI	High Color Rendering	Energy Savings	Reduced Wattage	Footnotes	Warning and Caution Notices	Additional Information
8' T8 Lamps (continued)																		
8' T8 Instant Start																		
T8	Single Pin (Fa8)	50	96.0	10912	F96T8/CW	24	7500		4050	3730	4100	60					101	
8' T8 High Output																		
8' T8 High Output – Recessed Double Contact																		
T8	Recessed Double Contact (R17d)	86	96.0	12536	F96T8/SP30/HO	24	18000		8000	7600	3000	78					101	
		86	96.0	12537	F96T8/SP35/HO	24	18000		8000	7600	3500	78					101	
		86	96.0	12538	F96T8/SP41/HO	24	18000		8000	7600	4100	78					101	
		86	96.0	12533	F96T8/SPX35/HO	24	18000		8200	7800	3500	85	✐				101	
		86	96.0	12534	F96T8/SPX41/HO	24	18000		8200	7800	4100	85	✐				101	
		86	96.0	12535	F96T8/SPX50/HO	24	18000		8200	7800	5000	82	✐				101	
		86	96.0	66897	F96T8/SPX65/HO	24	18000		8000	7500	6500	78	✐				101	
T8 Mod-U-Line®																		
T8 1-5/8" Spacing Ecolux®																		
T8	Medium Bi-Pin (G13)	31	22.5	72117	F31T8/SPX30/U/ECO	15	24000		2775	2440	3000	82	✐			20	102	
		31	22.5	72118	F31T8/SPX35/U/ECO	15	24000		2775	2440	3500	82	✐			20	102	
		31	22.5	72119	F31T8/SPX41/U/ECO	15	24000		2775	2440	4100	82	✐			20	102	
T8 1-5/8" 29W Ecolux®																		
T8	Medium Bi-Pin (G13)	29	22.5	62172	F29T8/SPX30/U/ECO	15	24000		2500	2200	3000	82	✐	$	✂	20	102	
		29	22.5	62173	F29T8/SPX35/U/ECO	15	24000		2500	2200	3500	82	✐	$	✂	20	102	
		29	22.5	62174	F29T8/SPX41/U/ECO	15	24000		2500	2200	4100	82	✐	$	✂	20	102	
T8 1-5/8" 26W Ecolux®																		
T8	Medium Bi-Pin (G13)	26	22.5	62169	F26T8/SPX30/U/ECO	15	24000		2250	1980	3000	82	✐	$	✂	20	102	
		26	22.5	62170	F26T8/SPX35/U/ECO	15	24000		2250	1980	3500	82	✐	$	✂	20	102	
		26	22.5	62171	F26T8/SPX41/U/ECO	15	24000		2250	1980	4100	82	✐	$	✂	20	102	
T8 6" Spacing																		
T8	Medium Bi-Pin (G13)	32	22.5	68920	F32T8/SPX30/U6/2	12	20000		2800	2630	3000	82	✐			20	102	
		32	22.5	68921	F32T8/SPX35/U6/2	12	20000		2800	2630	3500	82	✐			20	102	
		32	22.5	68922	F32T8/SPX41/U6/2	12	20000		2800	2630	4100	82	✐			20	102	
		32	22.5	68923	F32T8/SPX50/U6/2	12	20000		2660	2510	5000	82	✐			20	102	
T8 6" Spacing Ecolux®																		
T8	Medium Bi-Pin (G13)	32	22.5	28145	F32T8/SP30/U6/ECO	12	20000		2700	2375	3000	78				20	102	
		32	22.5	28149	F32T8/SP35/U6/ECO	12	20000		2700	2375	3500	78				20	102	
		32	22.5	28152	F32T8/SP41/U6/ECO	12	20000		2700	2375	4100	78				20	102	
		32	22.5	72111	F32T8/SPX30/U6/ECO	12	20000		2800	2465	3000	82	✐			20	102	
		32	22.5	72112	F32T8/SPX35/U6/ECO	12	20000		2800	2465	3500	82	✐			20	102	
		32	22.5	72113	F32T8/SPX41/U6/ECO	12	20000		2800	2465	4100	82	✐			20	102	
T8 6" Spacing Ecolux® Watt-Miser® 30 Watt Lamp																		
T8	Medium Bi-Pin (G13)	30	22.5	72114	F32T8/SPX30/U6/WM/ECO	12	24000		2800	2465	3000	82	✐	$	✂	20	102	
		30	22.5	72115	F32T8/SPX35/U6/WM/ECO	12	24000		2800	2465	3500	82	✐	$	✂	20	102	
		30	22.5	72116	F32T8/SPX41/U6/WM/ECO	12	24000		2800	2465	4100	82	✐	$	✂	20	102	
T8 6" Spacing Ecolux® 28 Watt Lamp																		
T8	Medium Bi-Pin (G13)	28	23.0	67394	F28T8/SPX30/U6/ECO	12	20000		2500	2200	3000	82	✐	$	✂	20	102	
		28	23.0	67395	F28T8/SPX35/U6/ECO	12	20000		2500	2200	3500	82	✐	$	✂	20	102	
		28	23.0	67396	F28T8/SPX41/U6/ECO	12	20000		2500	2200	4100	82	✐	$	✂	20	102	
Other T8 Lengths																		
18" T8 w/Starcoat®																		
T8	Medium Bi-Pin (G13)	15	18.0	49489	F15T8/XL/SPX65	24	24000		850	800	6500	75	✐				101	
5' T8 w/Starcoat®																		
T8	Medium Bi-Pin (G13)	40	60.0	22660	F40T8/SPX30	24	20000		3725	3350	3000	84	✐				101	
		40	60.0	22661	F40T8/SPX35	24	20000		3725	3350	3500	84	✐				101	
		40	60.0	22662	F40T8/SPX41	24	20000		3725	3350	4100	84	✐				101	
6' T8 Instant Start																		
T8	Single Pin (Fa8)	35	72.0	10829	F72T8/CW	24	7500		3000	2730	4100	60					101	Not for sale for use in OR
		35	72.0	10835	F72T8/WW 6PK	6	7500		3100	2820	3000	52					101	Warm White, Not for sale for use in OR

For the most up-to-date product information, see www.gelighting.com. To convert inches to millimeters, multiply by 25.4.
All footnotes, warning and caution notices found at the end of this section (page 4-26).

Bulb Shape	Base	Watts	Nominal Length (in)	Order Code	Description	Case Qty	Rated Life (3 hr/ start)	Rated Life (12 hr/ start)	Initial Lumens	Mean Lumens	Color Temp K	CRI	High Color Rendering	Energy Savings	Reduced Wattage	Footnotes	Warning and Caution Notices	Additional Information
T8 Polylux																		
2' T8 Polylux																		
T8	Medium Bi-Pin (G13)	18	24.0	93311	F18T8/835/XLR	25	20000		1350	1280	3500	85	✐				101	
		18	24.0	93317	F18T8/841/XLR	25	20000		1350	1280	4100	85	✐				101	
4' T8 Polylux																		
T8	Medium Bi-Pin (G13)	36	48.0	19991	F36WT8/835/XLR	25	20000		3350	3180	3500	85	✐				101	
		36	48.0	16856	F36WT8/841/XLR	25	20000		3350	3180	3500	85	✐				101	
5' T8 Polylux																		
T8	Medium Bi-Pin (G13)	58	60.0	40120	F58T8/835/PLY/XLR	25	20000		5200	4940	3500	85	✐				101	
		58	60.0	40081	F58T8/841/PLY/XLR	25	20000		5200	4940	4000	85	✐				101	
6' T8 Polylux																		
T8	Medium Bi-Pin (G13)	70	70.0	62572	F70T8/835/PLY/XLR	25	20000		6000	5985	3500	85	✐				101	
		70	70.0	62573	F70T8/840/PLY/XLR	25	20000		6000	5985	4100	85	✐				101	
T8 Preheat																		
12" T8																		
T8	Medium Bi-Pin (G13)	13	12.0	10098	F13T8/CW	24	7500		565	480	4100	60					101	
15" T8																		
T8	Medium Bi-Pin (G13)	14	15.0	10104	F14T8/CW	24	7500		685	580	4100	60					101	
18" T8																		
T8	Medium Bi-Pin (G13)	15	18.0	17911	F15T8/SP35	24	7500		940	850	3500	75					101	
		15	18.0	19643	F15T8/SP41	24	7500		940	850	4100	72					101	
		15	18.0	19644	F15T8/SPX30	24	7500		1000	900	3000	82	✐				101	
		15	18.0	19645	F15T8/SPX35	24	7500		1000	900	3500	82	✐				101	
		15	18.0	10142	F15T8/CW	24	7500		825	725	4100	60					101	
		15	18.0	10143	F15T8/CW 6PK	24	7500		825	725	4100	60					101	
		15	18.0	10134	F15T8/D	24	7500		700	615	6500	75					101	Daylight
		15	18.0	21326	F15T8/KB 6PK	24	7500		940	850	3000	70					104	Kitchen & Bath
		15	18.0	13968	F15T8/SUN 6PK	24	7500		620	525	5000	90	✐				101	Sunlight
		15	18.0	10147	F15T8/WW	24	7500		845	745	3000	52					101	Warm White
36" T8																		
T8	Medium Bi-Pin (G13)	30	36.0	10316	F30T8/CW 6PK	24	7500		2150	1980	4100	60					101	
		30	36.0	10310	F30T8/D	24	7500		1850	1625	6500	75					101	Daylight
		30	36.0	22747	F30T8/KB 6PK	24	7500		2125	1910	3000	70					104	Kitchen & Bath
T12 Lamps																		
3' T12 Ecolux® – Rapid Start																		
25W																		
T12	Medium Bi-Pin (G13)	25	36.0	80080	F25T12/SP30/RS/WM/ECO	24	18000		2025	1780	3000	70		$	☛		101	
		25	36.0	80081	F25T12/SP35/RS/WM/ECO	24	18000		2025	1780	3500	73		$	☛		101	
		25	36.0	80065	F25T12/CWRSWM/ECO	24	18000		1925	1640	4100	60		$	☛		101	
		25	36.0	80077	F25T12/WW/RS/WM/ECO	24	18000		1975	1640	3000	52		$	☛		101	Warm White
30W																		
T12	Medium Bi-Pin (G13)	30	36.0	80087	F30T12/SP35/RS/ECO	24	18000		2350	2120	3500	73					101	
		30	36.0	80088	F30T12/SP41/RS/ECO	24	18000		2350	2120	4100	72					101	
		30	36.0	80089	F30T12/SPX30/RS/ECO	24	18000		2375	2140	3000	82	✐				101	
		30	36.0	80090	F30T12/SPX35/RS/ECO	24	18000		2375	2140	3500	82	✐				101	
		30	36.0	80083	F30T12/C50/RS/ECO	24	18000		1650	1350	5000	90	✐				101	Chroma 50
		30	36.0	80084	F30T12/CW/RS/ECO	24	18000		2200	1910	4100	60					101	
		30	36.0	80085	F30T12/CW/RS/ECO 6PK	24	18000		2200	1910	4100	60					101	
		30	36.0	80086	F30T12/D/RS/ECO	24	18000		1900	1650	6500	75					101	Daylight
		30	36.0	80091	F30T12/WW/RS/ECO	24	18000		2275	1980	3000	52					101	Warm White
4' T12 – Rapid Start																		
34W Watt-Miser® Ecolux® – TCLP Compliant																		
T12	Medium Bi-Pin (G13)	34	48.0	66474	F34CX41/WM/ECO	30	20000		2500	2200	4100	87	✐	$	☛	1	101	
		34	48.0	66649	F34CW/C/WM/ECO	30	15000		1800	1500	4100	87	✐	$	☛	1	101	
		34	48.0	80092	F34C50/RS/WM/ECO	30	20000		2000	1720	5000	90	✐	$	☛	1	101	Chroma 50
		34	48.0	80093	F34DX/RS/WM/ECO	30	20000		1750	1450	6500	90	✐	$	☛	1	101	Daylight Deluxe

For the most up-to-date product information, see www.gelighting.com. To convert inches to millimeters, multiply by 25.4.
All footnotes, warning and caution notices found at the end of this section (page 4-26).

Bulb Shape	Base	Watts	Nominal Length (in)	Order Code	Description	Case Qty	Rated Life (3 hr/ start)	Rated Life (12 hr/ start)	Initial Lumens	Mean Lumens	Color Temp K	CRI	High Color Rendering	Energy Savings	Reduced Wattage	Footnotes	Warning and Caution Notices	Additional Information
T12 Lamps (continued)																		
4' T12 – Rapid Start (continued)																		
40W Ecolux® – TCLP Compliant																		
T12	Medium Bi-Pin (G13)	40	48.0	66650	F40UT/ECO/UPC	30	15000		2100	1900	4100	87	✐				101	
		40	48.0	80096	F40C50/ECO	30	20000		2250	1870	5000	90	✐				101	Chroma 50
		40	48.0	25399	F40C50/ECO/UPC	30	20000		2250	1870	5000	90	✐				101	Chroma 50
		40	48.0	13795	F40C75 30PK	30	20000		1950	1680	7500	92	✐				101	Not for Sale for Use in CA, VM, OR
		40	48.0	80097	F40DX/ECO	30	20000		2050	1740	6500	90	✐				101	Daylight Deluxe
		40	48.0	80098	F40N/ECO	30	20000		2100	1740	3700	90	✐				101	Natural
		40	48.0	12224	F40SUN/ECO 6PK	24	20000		2250	1870	5000	90	✐				101	Sunlight
Watt-Miser® Energy Saving Lamps																		
T12 3-5/8" Spacing Watt-Miser®																		
T12	Medium Bi-Pin (G13)	35	22.5	68050	F35/CW/C/U3/WM	12	14000		1650	1400	4100	87						
		35	23.0	66854	F35/CX41/U3/WM	12	14000		2300	2185	4100	87	✐	$	✈	1	102	
T12 6" Spacing Watt-Miser®																		
T12	Medium Bi-Pin (G13)	35	22.5	68051	F35/CW/C/U6/WM	12	14000		1650	1400	4100	87						
		35	23.0	66855	F35/CX41/U6/WM	12	14000		2300	2185	4100	87	✐	$	✈	1	102	
		35	23.0	66851	F35/CX41/U6WMUPC	12	14000		2300	2185	4100	87	✐	$	✈	1	102	
T12 Instant Start																		
T12	Single Pin (Fa8)	20	24.0	10691	F24T12/CW	24	7500		1050	900	4100	60					101	
		30	36.0 cm	10709	F36T12/CW	24	7500		2000	1800	4100	60					101	
		35	42.0	10735	F42T12/CW	24	7500		2400	2210	4100	60					101	
		40	48.0	15262	F48T12/SP35	24	9000		3000	2820	3500	73					101	
		40	48.0	15088	F48T12/SPX30	24	9000		3050	2870	3000	82	✐				101	
		40	48.0	15116	F48T12/SPX35	24	9000		3050	2870	3500	82	✐				101	
		40	48.0	10748	F48T12/CW	24	9000		2875	2650	4100	60					101	
		40	48.0	20461	F48T12/CW/UPC 6PK	24	9000		2875	2650	4100	60					101	
Watt-Miser® Energy Saving Lamps																		
T12	Single Pin (Fa8)	30	48.0	14319	F48T12/SP35/WM	24	9000		2575	2420	3500	73		$	✈	1	101	
		30	48.0	13048	F48T12/SP41/WM	24	9000		2575	2420	4100	72		$	✈	1	101	
		30	48.0	44967	F48T12/CW/WM	24	9000		2475	2400	4100	60		$	✈	1	101	
8' T12 Instant Start																		
8' Instant Start Standard																		
T12	Single Pin (Fa8)	75	96.0	14652	F96T12/DX	15	12000		4300	3870	6500	90	✐				101	Daylight Deluxe
		75	96.0	13725	F96T12/N 15PK	15	12000		4250	3740	3700	90	✐				101	Natural
		75	96.0	13752	F96T12/C50	15	12000		4600	4050	5000	90	✐				101	Chroma 50
Watt-Miser® Energy Saving Lamps																		
8" Instant Start Watt-Miser®																		
T12	Single Pin (Fa8)	60	96.0	13756	F96T12/C50/WM 15PK	15	12000		4000	3520	5000	90	✐	$	✈	1	101	Chroma 50
8" Instant Start Watt-Miser® XL Extra-life																		
T12	Single Pin (Fa8)	60	96.0	68052	F96T12/CW/C/WM	15	12000		3600	2900	4100	90						
		60	96.0	66857	F96T12XL/HL35/WM	15	12000		5900	5480	3500	80	✐	$	✈	1	101	
		60	96.0	66858	F96T12XL/HL41/WM	15	12000		5900	5480	4100	80	✐	$	✈	1	101	
		60	96.0	66859	F96T12XL/HL50/WM	15	12000		5900	5480	5000	80	✐	$	✈	1	101	
		60	96.0	66860	F96T12XL/HL65/WM	15	12000		5700	5290	6500	78	✐	$	✈	1	101	
		60	96.0	66856	F96T12/XL/HL35/WM/UPC	15	12000		5900	5480	3500	80	✐	$	✈	1	101	
		60	96.0	66852	F96T12/XL/HL41/WM/UPC	15	12000		5900	5480	4100	80	✐	$	✈	1	101	
T12 Other Lengths																		
5' T12 Instant Start																		
T12	Single Pin (Fa8)	50	60.0	23073	F60T12/CW 15PK	15	12000		3600	3310	4100	60					101	
		50	60.0	23076	F60T12/D 15PK	15	12000		3000	2760	6500	75					101	Daylight
64" T12 Instant Start																		
T12	Single Pin (Fa8)	50	64.0	23082	F64T12/CW15PK	15	10000		3850	3540	4100	60					101	
		50	64.0	23085	F64T12/D 15PK	15	10000		3300	3040	6500	75					101	Daylight

For the most up-to-date product information, see www.gelighting.com. To convert inches to millimeters, multiply by 25.4.
All footnotes, warning and caution notices found at the end of this section (page 4-26).

Bulb Shape	Base	Watts	Nominal Length (in)	Order Code	Description	Case Qty	Rated Life (3 hr/ start)	Rated Life (12 hr/ start)	Initial Lumens	Mean Lumens	Color Temp K	CRI	High Color Rendering	Energy Savings	Reduced Wattage	Footnotes	Warning and Caution Notices	Additional Information
T12 Lamps (continued)																		
T12 Other Lengths (continued)																		
6' T12 Instant Start																		
T12	Single Pin (Fa8)	55	72.0	15286	F72T12/SP35 15PK	15	12000		4700	4420	3500	73					101	
		55	72.0	15097	F72T12/SP41	15	12000		4700	4420	4100	72					101	
		55	72.0	15117	F72T12/SPX30 15PK	15	12000		4800	4510	3000	82	✐				101	
		55	72.0	15098	F72T12/SPX35 15PK	15	12000		4800	4510	3500	82	✐				101	
		55	72.0	13743	F72T12/CW 15PK	15	12000		4500	4140	4100	60					101	
		55	72.0	12525	F72T12/CW/UPC 10PK	10	12000		4500	4140	4100	60					101	
		55	72.0	13748	F72T12/D 15PK	15	12000		3800	3500	6500	75					101	Daylight
7' T12 Instant Start																		
T12	Single Pin (Fa8)	65	84.0	13764	F84T12/CW 15PK	15	12000		5300	4880	4100	60					101	
T12 High Output (800mA) Rapid Start Recessed Double Contact																		
18" High Output																		
T12	Recessed Double Contact (R17d)	30	18.0	10204	F18T12/CW/HO	24	9000		1000	750	4100	60					101	
2' High Output																		
T12	Recessed Double Contact (R17d)	35	24.0	10261	F24T12/CW/HO	24	9000		1620	1345	4100	60					101	
		35	24.0	10275	F24T12/D/HO	24	9000		1400	1160	6500	74					101	Daylight
30" High Output																		
T12	Recessed Double Contact (R17d)	40	30.0	33707	F30T12/CW/HO	24	9000		2250	1950	4100	60					101	
3' High Output																		
T12	Recessed Double Contact (R17d)	45	36.0	10374	F36T12/CW/HO	24	9000		2800	2440	4100	60					101	
		45	36.0	10380	F36T12/D/HO	24	9000		2350	2040	6500	75					101	
		45	36.0	10388	F36T12/SGN/HO	24	9000		2150	1830	5400	82	✐				101	
42" High Output																		
T12	Recessed Double Contact (R17d)	55	42.0	10559	F42T12/CW/HO	24	9000		3200	2790	4100	60					101	
		55	42.0	10560	F42T12/D/HO	24	9000		2900	2520	6500	74					101	Daylight
		55	42.0	10562	F42T12/SGN/HO	24	9000		2600	2215	5400	82	✐				101	Sign White
4' High Output																		
T12	Recessed Double Contact (R17d)	60	48.0	15359	F48T12/SP30/HO	24	12000		4250	3830	3000	70					101	
		60	48.0	15360	F48T12/SP35/HO	24	12000		4250	3830	3500	73					101	
		60	48.0	15361	F48T12/SP41/HO	24	12000		4250	3830	4100	72					101	
		60	48.0	15115	F48T12/SPX35/HO	24	12000		4350	3920	3500	82	✐				101	
		60	48.0	10773	F48T12/CW/HO	24	12000		3825	3320	4100	60					101	
		60	48.0	27313	F48T12/CW/HO/UPC	24	12000		4050	3520	4100	60					101	
		60	48.0	10778	F48T12/D/HO	24	12000		3400	2960	6500	75					101	Daylight
		60	48.0	10573	F48T12/SGN/HO	24	12000		3100	2640	5400	80	✐				101	Sign White
4' High Output Watt-Miser® Energy Saving Lamps																		
T12	Recessed Double Contact (R17d)	55	48.0	15342	F48T12/SP35/HO/WM	24	12000		3850	3465	3500	73		$	✂	1	101	
		55	48.0	11179	F48T12/LW/HO/WM	24	12000		3900	3390	4200	49		$	✂	1	101	Lite White
5' High Output																		
T12	Recessed Double Contact (R17d)	75	60.0	23075	F60T12/CW/HO 15PK	15	12000		5150	4480	4100	60					101	
		75	60.0	23077	F60T12/D/HO 15PK	15	12000		4400	3830	6500	75					101	Daylight
		75	60.0	23081	F60T12/SGN/HO 15PK	15	12000		4000	3400	5400	82	✐				101	Sign White
64" High Output																		
T12	Recessed Double Contact (R17d)	80	64.0	23083	F64T12/CW/HO 15PK	15	12000		5600	4870	4100	60					101	
		80	64.0	23087	F64T12/D/HO 15PK	15	12000		4750	4130	6500	75					101	Daylight
		80	64.0	23089	F64T12/SGN/HO 15PK	15	12000		4300	3660	5400	82	✐				101	Sign White

Bulb Shape	Base	Watts	Nominal Length (in)	Order Code	Description	Case Qty	Rated Life (3 hr/ start)	Rated Life (12 hr/ start)	Initial Lumens	Mean Lumens	Color Temp K	CRI	High Color Rendering	Energy Savings	Reduced Wattage	Footnotes	Warning and Caution Notices	Additional Information
T12 Lamps (continued)																		
T12 High Output (800mA) Rapid Start Recessed Double Contact (continued)																		
6' High Output																		
T12	Recessed Double Contact (R17d)	85	72.0	15343	F72T12/SP30/HO 15PK	15	12000		6650	5990	3000	70					101	
		85	72.0	15347	F72T12/SP35/HO 15PK	15	12000		6650	5990	3500	73					101	
		85	72.0	15348	F72T12/SP41/HO 15PK	15	12000		6650	5990	4100	72					101	
		85	72.0	15137	F72T12/SPX30/HO 15PK	15	12000		6800	6120	3000	82	✐				101	
		85	72.0	15351	F72T12/SPX35/HO 15PK	15	12000		6800	6120	3500	82	✐				101	
		85	72.0	13697	F72T12/CW/HO 15PK	15	12000		6350	5520	4100	60					101	
		85	72.0	13699	F72T12/D/HO 15PK	15	12000		5350	4650	6500	75					101	Daylight
		85	72.0	12527	F72T12/N/HO	10	12000		4300	3610	3700	90	✐				101	Natural
		85	72.0	13701	F72T12/SGN/HO 15PK	15	12000		4900	4170	5400	82	✐				101	Sign White
		85	72.0	13702	F72T12/WW/HO 15PK	15	12000		6550	5700	3000	52					101	Warm White
7' High Output																		
T12	Recessed Double Contact (R17d)	100	84.0	13766	F84T12/CW/HO 15PK	15	12000		7700	6700	4100	60					101	
		100	84.0	13767	F84T12/D/HO 15PK	15	12000		6500	5660	6500	75					101	Daylight
		100	84.0	13768	F84T12/SGN/HO 15PK	15	12000		6000	5100	5400	82	✐				101	Sign White
8' High Output																		
T12	Recessed Double Contact (R17d)	110	96.0	13707	F96T12/C50/HO 15PK	15	12000		6750	5670	5000	90	✐				101	Chroma 50
		110	96.0	14653	F96T12/DX/HO	15	12000		6100	5185	6500	90	✐				101	Daylight Deluxe
8' High Output Watt-Miser® Energy Saving Lamps																		
T12	Recessed Double Contact (R17d)	95	96.0	66861	F96T12/HL30/HO/WM	15	12000		8850	7920	3000	77	✐	$	✈	1	101	
		95	96.0	66862	F96T12/HL41/HO/WM	15	12000		8850	7920	4100	77	✐	$	✈	1	101	
		95	96.0	66853	F96T12/HL41/HO/WM/UPC	15	12000		8850	7920	4100	77	✐	$	✈	1	101	
T12 Very High Output (1500mA) Recessed Double Contact																		
T12	Recessed Double Contact (R17d)	110	48.0	10751	F48T12/CW/1500	24	10000		6200	4030	4100	60				4	101	
		165	72.0	13760	F72T12/CW/1500 15PK	15	10000		9000	6300	4100	60				4	101	
		185	96.0	13789	F96T12/CW/1500/WM 15PK	15	9000		12500	9380	4100	60		$	✈	4	101	
		215	96.0	13781	F96T12/CW/1500 15PK	15	10000		13500	10125	4100	60				4	101	
		215	96.0	13783	F96T12/D/1500 15PK	15	10000		11500	8630	6500	74				4	101	Daylight
T12 Preheat																		
15"																		
T12	Medium Bi-Pin (G13)	14	15.0	10116	F14T12/CW	24	9000		650	550	4100	60					101	Preheat
		14	15.0	10117	F14T12/CW 6PK	24	9000		650	550	4100	60					101	Preheat
		14	15.0	22979	F14T12/KB 6PK	24	9000		700	650	3000	70					104	Preheat, Kitchen & Bath
18"																		
T12	Medium Bi-Pin (G13)	15	18.0	10183	F15T12/CW 6PK	24	9000		760	685	4100	60					101	Preheat
		15	18.0	22745	F15T12/KB 6PK	24	9000		785	730	3000	70					104	Preheat, Kitchen & Bath
		15	18.0	10185	F15T12/WW	24	9000		780	700	3000	52					101	Preheat
24"																		
T12	Medium Bi-Pin (G13)	20	24.0	80048	F20T12/SP35/ECO	24	9000		1275	1200	3500	73					101	Preheat
		20	24.0	15353	F20T12/SP41	24	9000		1275	1200	4100	72					101	Preheat
		20	24.0	80049	F20T12/SPX35/ECO	24	9000		1300	1220	3500	82	✐				101	Preheat
		20	24.0	80044	F20T12/C50/ECO	24	9000		875	790	5000	90	✐				101	Preheat
		20	24.0	80045	F20T12/CW/ECO	24	9000		1200	1150	4100	60					101	Preheat
		20	24.0	80046	F20T12/CW/ECO 6PK	24	9000		1200	1150	4100	60					101	Preheat
		20	24.0	80047	F20T12/D/ECO	24	9000		1025	945	6500	75					101	Preheat
		20	24.0	25575	F20T12/D/ECO/UPC	24	9000		1025	945	6500	75					101	Preheat, Daylight
		20	24.0	21325	F20T12/KB/ECO	24	9000		1275	1200	3000	70					104	Preheat, Kitchen & Bath
		20	24.0	14419	F20T12/SUN/ECO	24	9000		875	790	5000	90	✐				101	Preheat, Sunlight
		20	24.0	80050	F20T12/WW/ECO	24	9000		1250	1150	3000	52					101	Preheat, Warm White
		20	24.0	25577	F20T12/WW/ECO/UPC	24	9000		1250	1150	3000	52					101	Preheat, Warm White
Other Diameters																		
T6 Instant Start																		
T6	Single Pin (Fa8)	25	42.0	12221	F42T6/SP35	24	7500		1830	1700	3500	73					101	
		25	42.0	10720	F42T6/CW	24	7500		1750	1580	4100	60					101	
		25	42.0	10721	F42T6/WW	24	7500		1825	1640	3000	52					101	Warm White
		40	64.0	10805	F64T6/CW	24	7500		2800	2520	4100	60					101	
		40	64.0	10807	F64T6/WW	24	7500		2900	2610	3000	52					101	Warm White

For the most up-to-date product information, see www.gelighting.com. To convert inches to millimeters, multiply by 25.4.
All footnotes, warning and caution notices found at the end of this section (page 4-26).

Bulb Shape	Base	Watts	Nominal Length (in)	Order Code	Description	Case Qty	Rated Life (3 hr/ start)	Rated Life (12 hr/ start)	Initial Lumens	Mean Lumens	Color Temp K	CRI	High Color Rendering	Energy Savings	Reduced Wattage	Footnotes	Warning and Caution Notices	Additional Information
Other Diameters (continued)																		
T17 Instant Start																		
T17	Mogul Bi-Pin (G20)	40	60.0	10575	F40T17/CW/IS	12	7500		2850	2620	4100	60			✓	3	101	Use only w/ Instant Start Ballasts
Pg17 T17 Preheat																		
T17	Mogul Bi-Pin (G20)	82	60.0	43443	F90T17/CW/WM	12	9000		5750	5060	4100	60		$	✓	4	101	
		90	60.0	10643	F90T17/CW	12	9000		6000	5280	4100	60			✓	4	101	
Power Groove Recessed Double Contact (1500mA)																		
PG17	Recessed Double Contact (R17d)	185	96.0	42666	F96PG17/CW/WM	8	12000		12700	9900	4100	60		$	✓	4	101	
		215	96.0	11009	F96PG17/CW	8	10000		14000	10915	4100	60			✓	4	101	
		215	96.0	11018	F96PG17/D	8	10000		12100	9440	6500	74				4	101	Daylight
T9 Circline® Lamps																		
T9	4-Pin (G10q)	20	6.5	42732	FC6T9/CW	12	12000		800	560	4100	60					101	
		22	8.25	33774	FC8T9/CW	12	12000		1100	825	4100	60					101	
		22	8.25	11026	FC8T9/D	12	12000		925	690	6500	75					101	Daylight
		22	8.25	11084	FC8T9/KB	6	12000		1400	1120	3000	82	✓				104	Kitchen & Bath
		32	12.0	33890	FC12T9/CW	12	12000		1950	1460	4100	60					101	
		32	12.0	11039	FC12T9/D	12	12000		1675	1260	6500	75					101	Daylight
		32	12.0	11085	FC12T9/KB	6	12000		2400	1920	3000	82	✓				104	Kitchen & Bath
		40	16.0	33893	FC16T9/CW	12	12000		2700	2030	4100	60					101	
		40	16.0	11052	FC16T9/D	12	12000		2250	1690	6500	75					101	Daylight
Special Application Lamps																		
covRguard® Shatter Resistant																		
T5 High Efficiency																		
T5	Miniature Bi-Pin (G5)	14	21.6	73194	F14W/T5/830/ECO/CVG	40	30000	36000	1310	1200	3000	85	✓			11,13	103	Blocks UV
		14	21.6	73195	F14W/T5/835/ECO/CVG	40	30000	36000	1310	1200	3500	85	✓			11,13	103	Blocks UV
		28	45.2	81546	F28W/T5/830/ECO/CVG	40	30000	36000	2813	2672	3000	85	✓			11,13	103	Blocks UV
		28	45.2	81547	F28W/T5/835/ECO/CVG	40	30000	36000	2813	2672	3500	85	✓			11,13	103	Blocks UV
		28	45.2	81548	F28W/T5/841/ECO/CVG	40	30000	36000	2813	2672	4100	85	✓			11,13	103	Blocks UV
		28	45.2	81549	F28W/T5/850/ECO/CVG	40	30000	36000	2667	2534	5000	85	✓			11,13	103	Blocks UV
		28	45.2	81550	F28W/T5/865/ECO/CVG	40	30000	36000	2319	2488	6500	85	✓			11,13	103	Blocks UV
T5 High Output																		
T5	Miniature Bi-Pin (G5)	24	21.6	71000	F24W/T5/830/ECO/CVG	40	30000	36000	1950	1853	3000	85	✓			11	103	
		24	21.6	70998	F24W/T5/835/ECO/CVG	40	30000	36000	1950	1853	3500	85	✓			11	103	
		24	21.6	70997	F24W/T5/841/ECO/CVG	40	30000	36000	1950	1853	4100	85	✓			11	103	
		24	21.6	70999	F24W/T5/850/ECO/CVG	40	30000	36000	1850	1758	5000	85	✓			11	103	
		39	33.4	70995	F39W/T5/830/ECO/CVG	40	30000	36000	3400	3230	3000	85	✓			11	103	
		39	33.4	70994	F39W/T5/835/ECO/CVG	40	30000	36000	3400	3230	3500	85	✓			11	103	
		39	33.4	70993	F39W/T5/841/ECO/CVG	40	30000	36000	3400	3230	4100	85	✓			11	103	
		39	33.4	70990	F39W/T5/865/ECO/CVG	40	30000	36000	3200	3040	6500	85	✓			11	103	
		54	45.2	48433	F54T5/830/HO/ECO/CVG	40	30000	36000	4850	4560	3000	85	✓			11	103	
		54	45.2	48436	F54T5/835/HO/ECO/CVG	40	30000	36000	4850	4560	3500	85	✓			11	103	
		54	45.2	48458	F54T5/841/HO/ECO/CVG	40	30000	36000	4850	4560	4100	85	✓			11	103	
		54	45.2	80311	F54T5/850/HO/ECO/CVG	40	30000	36000	4650	4370	5000	85	✓			11	103	
		54	45.2	48469	F54T5/865/HO/ECO/CVG	40	30000	36000	4650	4320	6500	85	✓			11	103	
T5 High Output Watt-Miser®																		
T5	Miniature Bi-Pin (G5)	51	45.2	72986	F54T5/835/WM/ECO/CVG	40	30000	36000	4850	4560	3500	85	✓	$	✓	11	103	
		51	45.2	72987	F54T5/841/WM/ECO/CVG	40	30000	36000	4850	4560	4100	85	✓	$	✓	11	103	
		51	45.2	72988	F54T5/850/WM/ECO/CVG	40	30000	36000	4650	4370	5000	85	✓	$	✓	11	103	
		47	45.0	65106	F54T5/47W/841CVG	40	30000	36000	4728	4343	4100	85	✓	$	✓	11	103	
		47	45.0	65107	F54T5/47W/850CVG	40	30000	36000	4531	4167	5000	85	✓	$	✓	11	103	
T5 Preheat Lamps																		
T5	Miniature Bi-Pin (G5)	8	12.0	41107	F8T5/CW/CVG	24	5000		385	310	4100	60				11,13	103	Blocks UV
		13	21.0	41108	F13T5/CW/CVG	24	5000		820	684	4100	60				11,13	103	Blocks UV

For the most up-to-date product information, see www.gelighting.com. To convert inches to millimeters, multiply by 25.4.
All footnotes, warning and caution notices found at the end of this section (page 4-26).

Bulb Shape	Base	Watts	Nominal Length (in)	Order Code	Description	Case Qty	Rated Life (3 hr/ start)	Rated Life (12 hr/ start)	Initial Lumens	Mean Lumens	Color Temp K	CRI	High Color Rendering	Energy Savings	Reduced Wattage	Footnotes	Warning and Caution Notices	Additional Information
Special Application Lamps (continued)																		
T8 Ecolux® w/ Starcoat®																		
2' T8 Ecolux® w/ Starcoat®																		
T8	Medium Bi-Pin (G13)	17	24.0	15974	F17T8SP35ECOCVG	24	30000	36000	1280	1220	3500	78				11,13,18	103	Blocks UV
		17	24.0	15977	F17T8SP41ECOCVG	24	30000	36000	1280	1220	4100	78				11,13,18	103	Blocks UV
		17	24.0	15975	F17T8SPX35ECOCVG	24	30000	36000	1310	1242	3500	85	✐			11,13,18	103	Blocks UV
		17	24.0	15976	F17T8SPX41ECOCVG	24	30000	36000	1310	1242	4100	85	✐			11,13,18	103	Blocks UV
		17	24.0	28885	F17T8XLSPX50ECOCVG	24	40000	45000	1310	1243	5000	82	✐			11,13,18	103	Blocks UV
3' Ecolux® w/Starcoat®																		
T8	Medium Bi-Pin (G13)	25	36.0	15978	F25T8SP30ECOCVG	24	30000	36000	2020	1920	3000	78				11,13,18	103	Blocks UV
		25	36.0	15981	F25T8SP35ECOCVG	24	30000	36000	2020	1920	3500	78				11,13,18	103	Blocks UV
		25	36.0	15984	F25T8SP41ECOCVG	24	30000	36000	2020	1920	4100	78				11,13,18	103	Blocks UV
		25	36.0	15989	F25T8SPX30ECOCVG	24	30000	36000	2080	1970	3000	85	✐			11,13,18	103	Blocks UV
		25	36.0	15990	F25T8SPX35ECOCVG	24	30000	36000	2080	1970	3500	85	✐			11,13,18	103	Blocks UV
		25	36.0	15991	F25T8SPX41ECOCVG	24	30000	36000	2080	1970	4100	85	✐			11,13,18	103	Blocks UV
		25	36.0	28887	F25T8XLSPX50ECOCVG	24	40000	45000	1990	1890	5000	82	✐			11,13,18	103	Blocks UV
4' T8 (48") Ecolux® w/Starcoat®																		
T8	Medium Bi-Pin (G13)	32	48.0	94838	F32T8SPP30ECO/CVG	36	30000	36000	2800	2640	3000	80				11,13,18	103	Blocks UV
		32	48.0	94839	F32T8SPP35ECO/CVG	36	30000	36000	2800	2640	3500	80				11,13,18	103	Blocks UV
		32	48.0	94861	F32T8SPP41ECO/CVG	36	30000	36000	2800	2640	4100	80				11,13,18	103	Blocks UV
		32	48.0	94842	F32T8SPP50ECO/CV	36	30000	36000	2800	2640	5000	80				11,13,18	103	Blocks UV
		32	48.0	94843	F32T8SPX65ECO/CV	36	30000	36000	2800	2670	6500	78				11,13,18	103	Blocks UV
		32	48.0	41125	F32T8SPX30ECOCVG	36	30000	36000	2860	2715	3000	85	✐			11,13,18	103	Blocks UV
		32	48.0	41126	F32T8SPX35ECOCVG	36	30000	36000	2860	2715	3500	85	✐			11,13,18	103	Blocks UV
		32	48.0	41127	F32T8SPX41ECOCVG	36	30000	36000	2860	2715	4100	85	✐			11,13,18	103	Blocks UV
		32	48.0	15971	F32T8SPX50ECOCVG	36	30000	36000	2715	2580	5000	82	✐			11,13,18	103	Blocks UV
4' T8 Ecolux® XL Extra-life w/Starcoat®																		
T8	Medium Bi-Pin (G13)	32	48.0	15972	F32T8XLSPX30ECOCVG	36	40000	45000	2860	2715	3000	85	✐			11,13,18	103	Blocks UV
		32	48.0	15973	F32T8XLSPX35ECOCVG	36	40000	45000	2860	2715	3500	85	✐			11,13,18	103	Blocks UV
		32	48.0	18369	F32T8XLSPX41ECCVG	36	40000	45000	2860	2715	4100	85	✐			11,13,18	103	Blocks UV
		32	48.0	23746	F32T8XLSPX50ECOCVG	36	40000	45000	2715	2580	5000	82				11,13,18	103	Blocks UV
Ultra Energy Saving T8 Lamps w/ covRguard®																		
4' T8 Ecolux® 25 Watt Lamp																		
T8	Medium Bi-Pin (G13)	25	48.0	72814	F32T8/25WSPX41ECOCVG	36	40000	46000	2425	2350	4100	82	✐	$	✈	1,11,13,18	103	Blocks UV
		25	48.0	72815	F32T8/25WSPX50ECOCVG	36	40000	46000	2425	2350	5000	80	✐	$	✈	1,11,13,18	103	Blocks UV
4' T8 Ecolux® UltraMax® 28 Watt Lamp																		
T8	Medium Bi-Pin (G13)	28	48.0	73292	F28T8/XLSPX30ECO/CVG	36	40000	46000	2595	2440	3000	85	✐	$	✈	1,11,13,18	103	Blocks UV, CEE Approved
		28	48.0	73293	F28T8/XLSPX35ECO/CVG	36	40000	46000	2595	2440	3500	85	✐	$	✈		103	Blocks UV, CEE Approved
		28	48.0	73294	F28T8/XLSPX41ECO/CVG	36	40000	46000	2595	2440	4100	82	✐	$	✈		103	Blocks UV, CEE Approved
		28	48.0	73295	F28T8/XLSPX50ECO/CVG	36	40000	46000	2595	2440	5000	80	✐	$	✈		103	Blocks UV
4' T8 Ecolux® High Lumen XL Extra-Life w/Starcoat®																		
T8	Medium Bi-Pin (G13)	32	48.0	00268	F32T8XLSPX35HCVG	36	40000	45000	3007	2827	3500	85	✐	$		11,13,18	103	Blocks UV
		32	48.0	00269	F32T8XLSPX41HCVG	36	40000	45000	3007	2827	4100	82	✐	$		11,13,18	103	Blocks UV
		32	48.0	80497	F32T8XLSPX50HCVG	36	40000	45000	2910	2735	5000	80	✐	$		11,13,18	103	Blocks UV
5' T8 w/Starcoat®																		
5' T8 (60") w/Starcoat®																		
T8	Medium Bi-Pin (G13)	40	60.0	41131	F40T8/SPX35/CVG	24	20000		3610	3250	3500	84	✐			11,13	103	Blocks UV
		40	60.0	47351	F40T8/SPX41/CVG	24	20000		3610	3250	4100	84	✐			11,13	103	Blocks UV
T8 Instant Start w/Starcoat®																		
8' T8 (96") Instant Start w/Starcoat®																		
T8	Single Pin (Fa8)	59	96.0	94856	F96T8XL/SPX30/CVG	24	24000	30000	5750	5480	3000	85				11,13	103	Blocks UV
		59	96.0	94859	F96T8XL/SPP35/CVG	24	24000	30000	5600	5060	3500	80				11,13	103	Blocks UV
		59	96.0	94860	F96T8XL/SPP41/CVG	24	24000	30000	5600	5060	4100	80				11,13	103	Blocks UV
		59	96.0	40099	F96T8XL/SPX30CVG	24	24000	30000	5770	5480	3000	85	✐			11,13	103	Blocks UV
		59	96.0	40105	F96T8XL/SPX35/CVG	24	24000	30000	5770	5480	3500	85	✐			11,13	103	Blocks UV
		59	96.0	40106	F96T8XL/SPX41/CVG	24	24000	30000	5770	5480	4100	85	✐			11,13	103	Blocks UV
		59	96.0	48205	F96T8XL/SPX50/CVG	24	24000	30000	5770	5480	5000	82	✐			11,13	103	Blocks UV

For the most up-to-date product information, see www.gelighting.com. To convert inches to millimeters, multiply by 25.4.
All footnotes, warning and caution notices found at the end of this section (page 4-26).

Bulb Shape	Base	Watts	Nominal Length (in)	Order Code	Description	Case Qty	Rated Life (3 hr/ start)	Rated Life (12 hr/ start)	Initial Lumens	Mean Lumens	Color Temp K	CRI	High Color Rendering	Energy Savings	Reduced Wattage	Footnotes	Warning and Caution Notices	Additional Information
Special Application Lamps (continued)																		
8' T8 High Output Lamps Recessed Double Contact w/Starcoat®																		
T8	Recessed Double Contact (R17d)	86	96.0	40107	F96T8/SP35HO/CVG	24	18000		7760	7370	3500	78				11,12,13	103	Blocks UV
		86	96.0	40108	F96T8/SP41HO/CVG	24	18000		7760	7370	4100	78				11,12,13	103	Blocks UV
		86	96.0	81563	F96T8/SPX50HO/CVG	24	18000		7954	7566	5000	82	✐			11,12,13	103	Blocks UV
T8 Preheat Lamps																		
T8	Medium Bi-Pin (G13)	13	12.0	41109	F13T8/CW/CVG	24	7500		545	465	4100	60				11,13	103	Blocks UV
		15	18.0	41110	F15T8/CW/CVG	24	7500		800	700	4100	60				11,13	103	Blocks UV
		15	18.0	46627	F15T8/KB/CVG/UPC	24	7500		910	825	3000	70				11,13	103	Blocks UV
		15	18.0	46216	F15T8/SP35/CVG	24	7500		910	825	3500	75				11,13	103	Blocks UV
		15	18.0	41111	F15T8/SPX35/CVG	24	7500		970	870	3500	82	✐			11,13	103	Blocks UV
T12 Rapid Start Lamps																		
3' Ecolux® T12 (36")																		
T12	Medium Bi-Pin (G13)	30	36.0	80486	F30T12CWRSECOCVG	24	18000		2130	1850	4100	60				11,13	103	Blocks UV
4' T12 Ecolux® Rapid Start Watt-Miser® Lamps (48")																		
T12	Medium Bi-Pin (G13)	40	48.0	80994	F40DX/ECO/CVG	30	20000		1988	1687	6500	90	✐			11,13	103	Daylight Deluxe
		40	48.0	80496	F40/C50/ECO/CVG	30	20000		2180	1810	5000	90	✐			11,13	103	Chroma 50
T12 Instant Start																		
T12	Single Pin (Fa8)	40	48.0	40127	F48T12/CW/CVG	24	9000		2780	2560	4100	60				11,13	103	
		40	48.0	41144	F48T12/SPX35/CVG	24	9000		2950	2780	3500	82	✐			11,13	103	
		50	60.0	41147	F60T12CW/CVG	15	12000		3490	3210	4100	60				11,13	103	
		55	72.0	41153	F72T12/SPX35/CVG	15	12000		4650	4370	3500	82	✐			11,13	103	
T12 Instant Start - Watt-Miser® Energy Saving Lamps																		
8' T12 Rapid Start Watt-Miser® Lamps (96")																		
T12	Single Pin (Fa8)	60	96.0	26038	F96T12XLHL41WMCV	15	12000		5723	5315	4100	80	✐	$	✈	1,11,14	103	
T12 Preheat																		
T12	Medium Bi-Pin (G13)	15	18.0	41114	F15T12/CW/CVG	24	9000		735	660	4100	60				11,13	103	Preheat
T12 High Output Lamps Recessed Double Contact																		
T12	Recessed Double Contact (R17d)	60	48.0	40129	F48T12/CW/HO/CVG	24	12000		3930	3410	4100	60				11,12,13	103	
		75	60.0	41148	F60T12/CW/HO/CVG	15	12000		4990	4340	4100	60				11,12,13	103	
		85	72.0	40811	F72T12CW/HO/CVG	15	12000		6150	5350	4100	60				11,12,13	103	
		85	72.0	46207	F72T12SP35HO/CVG	15	12000		6450	5810	3500	73				11,12,13	103	
		85	72.0	41152	F72T12SPX30HOCVG	15	12000		6590	5930	3000	82	✐			11,12,13	103	
		85	72.0	41154	F72T12SPX35HOCVG	15	12000		6590	5930	3500	82	✐			11,12,13	103	
		110	96.0	46430	F96T12/DX/HO/CVG	15	12000		5917	5029	6500	90	✐			11,12,13	103	Daylight Deluxe
T12 High Output Lamps Recessed Double Contact – Watt-Miser® Energy Saving Lamps																		
T12	Recessed Double Contact (R17d)	95	96.0	26039	F96T12HL41HOWMCV	15	12000		8580	7680	4100	77	✐	$	✈	1,11,12,13	103	
Germicidal covRguard®																		
T8																		
T8	Medium Bi-Pin (G13)	15	18.0	72761	G15T8/CVG	24	7500									9	106	
Cold Temperature Lamps																		
T5																		
T5	Miniature Bi-Pin (G5)	54	45.2	81522	F54T5/841/CT	36	30000	36000	4500	4275	4100	85	✐			11,13,17	101	Plastic Jacket
T8																		
T8	Medium Bi-Pin (G13)	58	60.0	16148	F58T8/835/CT	24	20000		4680	4450	3500	85	✐			11,13,17	101	Plastic Jacket
		58	60.0	23752	F58T8/841/CT	24	20000		4680	4450	4100	85	✐			11,13,17	101	Plastic Jacket
		70	72.0	16149	F70T8/835/CT	18	20000		5670	5386	3500	85	✐			11,13,17	101	Plastic Jacket
		70	72.0	23754	F70T8/841/CT	18	20000		5670	5386	4100	85	✐			11,13,17	101	Plastic Jacket

For the most up-to-date product information, see www.gelighting.com. To convert inches to millimeters, multiply by 25.4.
All footnotes, warning and caution notices found at the end of this section (page 4-26).

Bulb Shape	Base	Watts	Nominal Length (in)	Order Code	Description	Case Qty	Rated Life (3 hr/ start)	Rated Life (12 hr/ start)	Initial Lumens	Mean Lumens	Color Temp K	CRI	High Color Rendering	Energy Savings	Reduced Wattage	Footnotes	Warning and Caution Notices	Additional Information
Cold Temperature Lamps (continued)																		
High Output (800mA) Recessed Double Contact																		
T12	Recessed Double Contact (R17d)	85	72.0	46199	F72T12/CW/HO-CT	8	12000		6150	5350	4100	60				11,13,17	101	Plastic Jacket
		110	96.0	11918	F96T12/CW/HO/CT	15	12000		8900	7740	4100	60				11,13,17	101	
		110	96.0	11919	F96T12/D/HO/CT	15	12000		7600	6610	6500	75				11,13,17	101	
T10 Very High Output (1500mA) Recessed Double Contact																		
T10	Recessed Double Contact (R17d)	110	48.0	10742	F48T10/CW	24	9000		6200		4100	60				4	101	
		135	60.0	17135	F60T10/SP30	24	6000		8500		3000	70				4	101	
		135	60.0	39157	F60T10/CW	24	6000		7000		4100	60				4	101	
		135	60.0	13002	F60T10/CW 6PK	6	6000		7000		4100	60				4	101	
		135	60.0	46197	F60T10/CW-CT	12	6000		6790		4100	60				4,13,17	101	Plastic Jacket
		160	72.0	13776	F72T10/CW 15PK	15	9000		9700		4100	60				4	101	
		160	72.0	46198	F72T10/CW-CT	8	9000		9400		4100	60				4,13,17	101	Plastic Jacket
T12 Very High Output (1500mA) Recessed Double Contact																		
T12	Recessed Double Contact (R17d)	110	48.0	34206	F48T12/CW/1500/0	24	10000		7000		4100	60				4	101	
		110	48.0	46195	F48T12CW/VHO/CT	12	10000		6790		4100	60				4,15,17	101	Plastic Jacket
		170	72.0	13762	F72T12CW1500/0	15	10000		10800		4100	60				4	101	
		170	72.0	46200	F72T12CW/VHO/CT	8	10000		10470		4100	60				4,15,17	101	Plastic Jacket
		220	96.0	13788	F96T12/CW/1500/0	15	10000		14400		4100	60				4	101	
		220	96.0	46202	F96T12CW/VHO-CT	8	10000		13960		4100	60				4,15,17	101	
Appliance Lamps																		
T8																		
T8	Medium Bi-Pin (G13)	18	22.0	10257	F22T8/D/4	24	7500		925	790	6500	75					101	Daylight
		18	24.0	17705	F24T8/CW/4 6PK	24	7500		1150	1040	4100	60					101	
		19	26.0	10702	F26T8/CW/4	24	7500		1275	1085	4100	60					101	
		19	26.0	38199	F26T8/CW/4 6PK	24	7500		1275	1085	4100	60					101	
		19	28.0	17704	F28T8/CW/4 6PK	24	7500		1350	1145	4100	60					101	
		19	30.0	10349	F30T8/CW/4	24	7500		1375	1170	4100	60					101	
T12																		
T12	Medium Bi-Pin (G13)	21	30.0	10355	F30T12/CW	24	7500		1350	1220	4100	60					101	
		25	28.0	10282	F25T12CW/28 6PK	24	7500		1550	1390	4100	60					101	
		25	28.0	10286	F25T12/D/28	24	7500		1450	1310	6500	75					101	Daylight
		25	33.0	38201	F25T12/CW/33 6PK	24	7500		1860	1675	4100	60					101	
		25	33.0	10299	F25T12/D/33	24	7500		1600	1440	6500	75					101	Daylight
		25	33.0	10293	F25T12/WW/33	24	7500		1910	1720	3000	52					101	Warm White
Blacklight/Blacklight Blue Lamps																		
Blacklight																		
T8	Medium Bi-Pin (G13)	15	18.0	35884	F15T8/BL 6PK	24	7500									8	105	Blacklight, UVA Source
		17	24.0	72759	F17T8/BLB/6PK	24	7000									8	105	Blacklight Blue, UVA Source, Intergal Dark Blue Filter
T12	Medium Bi-Pin (G13)	20	24.0	10244	F20T12/BL 6PK	24	9000									8	105	Blacklight, UVA Source
		40	22.5	40537	F40BL/U/3	12	14000									8	105	Blacklight, UVA Source, Mod-U-Line®, 3-5/8 Spacing Between Legs
		40	48.0	10526	F40BL 6PK	24	20000									8	105	Blacklight, UVA Source
Blacklight Blue																		
T5	Miniature Bi-Pin (G5)	4	6.0	10019	F4T5/BLB	24	5000									8	101	Blacklight Blue, UVA Source, Integral Dark Blue Filter
		8	12.0	10077	F8T5/BLB	24	5000									8	101	Blacklight Blue, UVA Source, Integral Dark Blue Filter
T8	Medium Bi-Pin (G13)	15	18.0	35885	F15T8/BLB 6PK	24	7500									8	101	Blacklight Blue, UVA Source, Integral Dark Blue Filter
T12	Medium Bi-Pin (G13)	20	24.0	34747	F20T12/BLB 6PK	24	9000									8	101	Blacklight Blue, UVA Source, Integral Dark Blue Filter
		40	48.0	10531	F40BLB 6PK	24	20000									8	101	Blacklight Blue, UVA Source, Integral Dark Blue Filter

For the most up-to-date product information, see www.gelighting.com. To convert inches to millimeters, multiply by 25.4.
All footnotes, warning and caution notices found at the end of this section (page 4-26).

Bulb Shape	Base	Watts	Nominal Length (in)	Order Code	Description	Case Qty	Rated Life (3 hr/ start)	Rated Life (12 hr/ start)	Initial Lumens	Mean Lumens	Color Temp K	CRI	High Color Rendering	Energy Savings	Reduced Wattage	Footnotes	Warning and Caution Notices	Additional Information
Colored Lamps																		
T8																		
T8	Medium Bi-Pin (G13)	32	48.0	94847	F32T8/B/65ECOCVG2	36	20000										103	Sleeved Rosco Blue 65
		32	48.0	94849	F32T8/G/89ECOCVG2	36	20000										103	Sleeved Rosco Green 89
		32	48.0	94850	F32T8/R/24ECOCVG2	36	20000										103	Sleeved Rosco Red 24
T12																		
T12	Medium Bi-Pin (G13)	40	48.0	10514	F40B 6PK	24	20000										101	Phosphor Blue
		40	48.0	10517	F40G 6PK	24	20000										101	Phosphor Green
Preheat																		
T12	Medium Bi-Pin (G13)	20	24.0	10231	F20T12/B 6PK	24	9000										101	Phosphor Blue
		20	24.0	10233	F20T12/G 6PK	24	9000										101	Phosphor Green
Gold Lamps																		
T5																		
T5	Miniature Bi-Pin (G5)	28	45.2	25768	F28T5/GO/CVG	40	20000		1986	1946							103	Gold Sleeved, Blocks UV and Deep Blue Emissions
T8																		
T8	Medium Bi-Pin (G13)	17	24.0	25779	F17T8/GO/ECOCVG	24	15000		970	950							103	Gold Sleeved, Blocks UV and Deep Blue Emissions
		25	36.0	25783	F25T8/GO/ECOCVG	24	15000		1590	1558							103	Gold Sleeved, Blocks UV and Deep Blue Emissions
		32	48.0	25784	F32T8/GO/ECOCVG	36	15000		2280	2235							103	Gold Sleeved, Blocks UV and Deep Blue Emissions
T12																		
T12	Medium Bi-Pin (G13)	40	48.0	25850	F40/GO/CVG	30	20000		2510	2460							103	Gold Sleeved, Blocks UV and Deep Blue Emissions
T12	Single Pin (Fa8)	55	72.0	25854	F72T12/GO/CVG	15	12000		4150	4070							103	Gold Sleeved, Blocks UV and Deep Blue Emissions
		55	96.0	25852	F96T12/GO/CVG	15	12000		5640	5530							103	Gold Sleeved, Blocks UV and Deep Blue Emissions
T12	Recessed Double Contact (R17d)	110	96.0	25853	F96T12/GO/HO/CVG	15	12000		8010	7850							103	Gold Sleeved, Blocks UV and Deep Blue Emissions
Germicidal Lamps																		
T5	Miniature Bi-Pin (G5)	4	6.0	15872	G4T5	24	6000									16	106	Clear, UVC Source
		6	8.0	15873	G6T5	24	6000									16	106	Clear, UVC Source
		8	12.0	11077	G8T5	24	7500									16	106	Clear, UVC Source
		11	9.0	29495	G11T5	24	8000									16	106	Clear, UVC Source
T5	Single Pin (Fa8)	39	36.0	15874	G36T5	24	9000									16	106	Clear, UVC Source
		65	64.0	15864	G64T5	24	9000									16	106	Clear, UVC Source
T5	4-Pin (G10q)	16	13.0	29502	G16T5/4P/SE	24	8000									9,16	106	Clear, UVC Source
		39	34.0	29503	G36T5/4P/SE	24	9000									9,16	106	Clear, UVC Source
		65	64.0	29504	G64T5/4P/SE	24	9000									9,16	106	Clear, UVC Source
T8	Medium Bi-Pin (G13)	9.5	14.0	29498	G10T8	24	6000									16	106	Clear, UVC Source
		15	18.0	11078	G15T8	24	7500									16	106	Clear, UVC Source
		25	18.0	11082	G25T8	24	7500									16	106	Clear, UVC Source
		30	36.0	11080	G30T8	24	7500									16	106	Clear, UVC Source
		36	48.0	29499	G36T8	24	8000									16	106	Clear, UVC Source
		55	36.0	15875	G55T8/HO	24	8000									16	106	Clear, UVC Source
T10	Medium Bi-Pin (G13)	20	24.0	15876	G20T10	24	8000									9,16	106	Clear, UVC Source
Plant and Aquarium/Terrarium Lamps																		
T8																		
18" T8 Lamps																		
T8	Medium Bi-Pin (G13)	15	18.0	22910	F15T8/AR/FS 6PK	24	7500		675		9325	64					104	Aquarium Lamp Freshwater & Saltwater
		15	18.0	49892	F15T8/PL/AQ 6PK	24	7500		510		3100	90	✐				104	Plant & Aquarium Wide Spectrum

For the most up-to-date product information, see www.gelighting.com. To convert inches to millimeters, multiply by 25.4.
All footnotes, warning and caution notices found at the end of this section (page 4-26).

Bulb Shape	Base	Watts	Nominal Length (in)	Order Code	Description	Case Qty	Rated Life (3 hr/ start)	Rated Life (12 hr/ start)	Initial Lumens	Mean Lumens	Color Temp K	CRI	High Color Rendering	Energy Savings	Reduced Wattage	Footnotes	Warning and Caution Notices	Additional Information
Plant and Aquarium/Terrarium Lamps (continued)																		
T12																		
24" T12 Lamps																		
T12	Medium Bi-Pin (G13)	20	24.0	49891	F20T12/PL/AQ/ECO	24	9000		750		3100	90	✐				104	Plant & Aquarium Wide Spectrum
48" T12 Lamps																		
T12	Medium Bi-Pin (G13)	40	48.0	49893	F40PL/AQ/ECO	24	20000		1900		3100	90	✐				104	Plant & Aquarium Wide Spectrum
Export Outside U.S. and Canada Only																		
T12	Medium Bi-Pin (G13)	40	22.5	14496	F40CW/U/6/EX	12	14000		2800	2460	4100	60					102	6" Spacing Between Legs
		40	22.5	14498	F40D/U/6/EX	12	14000		2350	2070	6500	75					102	Daylight, 6" Spacing Between Legs
		40	48.0	14656	F40CW/EX 30PK	30	20000		3050	2680	4100	60					101	
		40	48.0	14488	F40D/EX	30	20000		2550	2240	6500	75					101	Daylight
T12	Single Pin (Fa8)	75	96.0	12541	F96T12CW/EX 15PK	15	12000		6150	5660	4100	60					101	
		75	96.0	12543	F96T12/D/EX 15PK	15	12000		5250	4330	6500	75					101	Daylight
T12	Recessed Double Contact (R17d)	110	96.0	12540	F96T12CW/HO/EX	15	12000		8900	7740	4100	60					101	
		110	96.0	12542	F96T12D/HO/EX15	15	12000		7600	6610	6500	75					101	Daylight
Consumer Products																		
T8																		
4' T8																		
T8	Medium Bi-Pin (G13)	32	48.0	66834	F32T8/KBP/2PK-24	24	20000		2900	2600	3000	80	✐				101	
		32	48.0	66829	F32T8/KBP/ECO/2P	6	20000		2900	2600	3000	80	✐				101	
		32	48.0	66837	F32T8/WS/ECO/2P	24	20000		2900	2600	3500	80	✐				101	
		32	48.0	66826	F32T8/GB/ECO/UPC	36	20000		2900	2600	4100	80	✐				101	
		32	48.0	66833	F32T8/GB/2PK-24	24	20000		2900	2600	4100	80	✐				101	
		32	48.0	66828	F32T8/GB/ECO/2P	6	20000		2900	2600	4100	80	✐				101	
		32	48.0	66836	F32T8/UT/2P-24	24	15000		1800	1600	4100	87	✐				101	
		32	48.0	66827	F32T8/UT/ECO/UPC	36	15000		1800	1600	4100	87	✐				101	
		32	48.0	66831	F32T8/UT/ECO/2P	6	15000		1800	1600	4100	87	✐				101	
		32	48.0	66832	F32T8/CL/2PK-24	24	20000		2900	2600	5000	80	✐				101	
		32	48.0	66835	F32T8/AS/ECO/2P	24	20000		2900	2600	6500	80	✐				101	
		32	48.0	66830	F32T8/AS/2PK-24	6	20000		2900	2600	6500	80	✐				101	
T12																		
4' F40 Ecolux® Standard																		
T12	Medium Bi-Pin (G13)	40	48.0	25399	F40C50/ECO/UPC	30	20000		2250	1870	5000	90	✐				101	Chroma 50
		40	48.0	12224	F40/SUN/ECO/6PK	24	20000		2250	1870	5000	90					101	Sunlight
		40	48.0	66655	F40/KBP/ECO/2P	9	20000		2900	2600	3000	87	✐				101	
		40	48.0	66652	F40/GB/ECO/2P	9	20000		2900	2600	4100	87	✐				101	
		40	48.0	66651	F40/UT/ECO/2P	9	15000		2100	1900	4100	87	✐				101	
		40	48.0	66653	F40/CL/ECO/2P	9	20000		2900	2600	5000	87	✐				101	
		40	48.0	66654	F40/AS/ECO/2P	9	20000		2900	2600	6500	87	✐				101	
		40	48.0	66650	F40UT/ECO/UPC	30	15000		2100	1900	4100	87	✐				101	
Mod-U-Line® Watt-Miser® U-Tubes																		
T12	Medium Bi-Pin (G13)	35	23.0	66851	F35/CX41/U6WMUPC	12	14000		2300	2185	4100	87	✐	$	✈	1	102	
T12 Instant Start																		
4' T12																		
T12	Single Pin (Fa8)	40	48.0	20461	F48T12CW/UPC 6PK	24	9000		2875	2650	4100	60					101	
8' T12 Watt-Miser® Energy Saving Lamps																		
T12	Single Pin (Fa8)	60	96.0	66856	F96T12/XL/HL35/WM/UPC	15	12000		5900	5480	3500	80	✐	$	✈	1	101	
		60	96.0	66852	F96T12/XL/HL41/WM/UPC	15	12000		5900	5480	4100	80	✐	$	✈	1	101	
T12 Rapid Start																		
T12	Medium Bi-Pin (G13)	30	36.0	77119	F30T12/RS/KB/ECO	24	18000		2350	2120	3000	70					104	Kitchen & Bath

For the most up-to-date product information, see www.gelighting.com. To convert inches to millimeters, multiply by 25.4.
All footnotes, warning and caution notices found at the end of this section (page 4-26).

Bulb Shape	Base	Watts	Nominal Length (in)	Order Code	Description	Case Qty	Rated Life (3 hr/ start)	Rated Life (12 hr/ start)	Initial Lumens	Mean Lumens	Color Temp K	CRI	High Color Rendering	Energy Savings	Reduced Wattage	Footnotes	Warning and Caution Notices	Additional Information
Consumer Products (continued)																		
T12 High Output Rapid Start Recessed Double Contact																		
T12	Recessed Double Contact (R17d)	60	48.0	27313	F48T12/CW/HO/UPC	24	12000		4050	3520	4100	60					101	
Preheat																		
T5																		
T5	Miniature Bi-Pin (G5)	4	6.0	15983	F4T5/CW/CB	10	5000		135	100	4100	60					101	Preheat
		6	9.0	15986	F6T5/CW/CB	10	5000		295	235	4100	60					101	Preheat
		8	12.0	67419	F8T5/KB/RVL/CB	10	5000		400	320	2600	75						Reveal
		8	12.0	15987	F8T5/CW/CB	10	5000		400	320	4100	60					101	Preheat
		8	12.0	25425	F8T5/WW/CB	5	5000		410	330	3000	52					101	Preheat, Warm White
		13	21.0	67420	F13T5/KB/RVL/CB	5	5000		880	640	2600	75						Reveal
		13	21.0	49333	F13T5/CW/CB	5	5000		850	705	4100	60					101	
		13	21.0	25426	F13T5/WW/CB	5	5000		870	720	3000	52					101	Preheat, Warm White
T8																		
T8	Medium Bi-Pin (G13)	18	15.0	79043	F15T8/KB/RVL 6PK	24	7500		825	743	2600	60					104	Reveal
		15	18.0	13968	F15T8/SUN 6PK	24	7500		620	525	5000	90	✐				101	Preheat, Sunlight
		15	18.0	21326	F15T8/KB 6PK	24	7500		940	850	3000	70					104	Preheat, Kitchen & Bath
		15	18.0	10143	F15T8/CW 6PK	24	7500		825	725	4100	60					101	Preheat
		30	36.0	22747	F30T8/KB 6PK	24	7500		2125	1910	3000	70					104	Preheat, Kitchen & Bath
T12																		
T12	Medium Bi-Pin (G13)	14	15.0	10117	F14T12/CW 6PK	24			650	550	4100	60					101	Preheat
		14	15.0	22979	F14T12/KB 6PK	24	9000		700	650	3000	70					104	Preheat
		15	18.0	10183	F15T12/CW 6PK	24	9000		760	685	4100	60					104	Preheat, Kitchen & Bath
		15	18.0	22745	F15T12/KB 6PK	24	9000		785	730	3000	70					104	Preheat
		24	20.0	79042	F20T12KB/ECO/RVL	24	9000		1125	1012	2600	60					104	Reveal
		20	24.0	80046	F20T12/CW/ECO 6PK	24	9000		1200	1150	4100	60					101	Preheat
		20	24.0	25575	F20T12/D/ECO/UPC	24	9000		1025	945	6500	75					101	Preheat, Daylight
		20	24.0	21325	F20T12/KB/ECO	24	9000		1275	1200	3000	70					104	Preheat, Kitchen & Bath
		20	24.0	14419	F20T12/SUN/ECO	24	9000		875	790	5000	90	✐				101	Preheat, Sunlight
		20	24.0	25577	F20T12/WW/ECOUPC	24	9000		1250	1150	3000	52					101	Preheat, Warm White
		20	24.0	10231	F20T12/B 6PK	24	9000		450	330							101	Preheat
		20	24.0	10233	F20T12/G 6PK	24	9000		1575	957							101	Preheat
Blacklight																		
T8	Medium Bi-Pin (G13)	15	24.0	35884	F15T8/BL 6PK	24	7500									8	105	Blacklight, UVA Source
T12	Medium Bi-Pin (G13)	20	24.0	10244	F20T12/BL 6PK	24	9000									8	105	Blacklight, UVA Source
		40	40.0	10526	F40BL 6PK	24	20000									8	105	Blacklight, UVA Source
Blacklight Blue																		
T8	Medium Bi-Pin (G13)	15	18.0	35885	F15T8/BLB 6PK	24	7500										101	Blacklight Blue, UVA Source, Integral Dark Blue Filter
T12	Medium Bi-Pin (G13)	20	24.0	34747	F20T12/BLB 6PK	24	9000										101	Blacklight Blue, UVA Source, Integral Dark Blue Filter
T12	Medium Bi-Pin (G13)	40	40.0	10531	F40BLB 6PK	24	20000										101	Blacklight Blue, UVA Source, Integral Dark Blue Filter
T9 Circline®																		
T9	4-Pin (G10q)	20	6.5	42732	FC6T9/CW	12	12000		800	560	4100	60					101	
		22	8.25	33774	FC8T9/CW	12	12000		1100	825	4100	60					101	
		22	8.25	11026	FC8T9/D	12	12000		925	690	6500	75					101	Daylight
		22	8.25	11084	FC8T9/KB	6	12000		1400	1120	3000	82	✐				104	Kitchen & Bath
		32	12.0	33890	FC12T9/CW	12	12000		1950	1460	4100	60					101	
		32	12.0	11039	FC12T9/D	12	12000		1675	1260	6500	75					101	Daylight
		32	12.0	11085	FC12T9/KB	6	12000		2400	1920	3000	82	✐				104	Kitchen & Bath
		40	16.0	33893	FC16T9/CW	12	12000		2700	2030	4100	60					101	
		40	16.0	11052	FC16T9/D	12	12000		2250	1690	6500	75					101	Daylight

For the most up-to-date product information, see www.gelighting.com. To convert inches to millimeters, multiply by 25.4.
All footnotes, warning and caution notices found at the end of this section (page 4-26).

Fluorescent Lamps

Bulb Shape	Base	Watts	Nominal Length (in)	Order Code	Description	Case Qty	Rated Life (3 hr/ start)	Rated Life (12 hr/ start)	Initial Lumens	Mean Lumens	Color Temp K	CRI	High Color Rendering	Energy Savings	Reduced Wattage	Footnotes	Warning and Caution Notices	Additional Information
covRguard® Shatter Resistant																		
T8 Preheat																		
T8	Medium Bi-Pin (G13)	15	18.0	46627	F15T8/KB/CVG/UPC	24	7500		910	825	3000	70				11,13	103	Blocks UV
T12 Rapid Start Watt-Miser®																		
T12	Medium Bi-Pin (G13)	34	48.0	26044	F34CX41WMECOCCVG	30	20000		2400	2130	4100	87	✐	$	✈	1,11,13	101	Blocks UV
T12 Preheat																		
T12	Medium Bi-Pin (G13)	20	24.0	80984	F20T12CWECOCVGUPC	24	9000		1160	1110	4100	60				11,13	103	Blocks UV
Plant and Aquarium / Terrarium																		
T8	Medium Bi-Pin (G13)	15		22910	F15T8/AR/FS 6PK	24	7500		675		9325	64					104	Aquarium Lamp Fresh-water & Saltwater
		15	18.0	49892	F15T8/PL/AQ 6PK	24	7500		510		3100	90					104	Plant & Aquarium Wide Spectrum
T12	Medium Bi-Pin (G13)	20	24.0	22908	F20T12/AR/FR 6PK	24	9000		600		4000	92	✐				104	Aquarium Lamp Freshwater
		20	24.0	49891	F20T12/PL/AQ/ECO	24	9000		750		3100	90	✐				104	Plant & Aquarium Wide Spectrum
		40	48.0	49893	F40PL/AQ/ECO	24	20000		1900		3100	90	✐				104	Plant & Aquarium Wide Spectrum

For the most up-to-date product information, see www.gelighting.com. To convert inches to millimeters, multiply by 25.4.
All footnotes, warning and caution notices found at the end of this section (page 4-26).

Operating Notes

General Operation

GE fluorescent lamps should be used only with auxiliary equipment designed to produce proper characteristics. Specifications for auxiliary equipment are covered by ANSI. Specifications for auxiliary equipment not included in ANSI Standards are available from GE Lighting.

Factors Affecting Lamp Performance

Ballasts

The three basic types of ballasts for fluorescent lamps are Preheat (PH), Instant Start (IS), and Rapid Start (RS). In general, lamps identified as preheat, rapid start or instant start should be used only on the corresponding ballast type. Electronic ballasts are presently available in both instant start and rapid start designs. Ballasts that operate with output currents below recommended levels, either by design or poor performance, will reduce fluorescent lamp life.

Application – Choosing the appropriate ballast for an application can have an impact on lamp life. For example, T8 lamps with electronic Instant Start ballasts should not be used in applications with electronic controls (such as occupancy sensors). The frequent switching will significantly reduce lamp life. Use only programmed rapid start ballasts in these situations.

Operating Characteristics – Fluorescent lamp life is strongly affected by the ballast. ANSI has set standards for fluorescent ballasts that will ensure proper operation of fluorescent lamps. Ballast characteristics that have a significant effect on lamp life are Current Crest Factor, Starting Time, Cathode Voltage and Open Circuit Voltage.

Ballast Factor – This is the percentage of a lamp's rated lumen output that can be expected when operated on a specific, commercially available ballast under laboratory conditions. For example, a ballast having a ballast factor of 0.93 will result in the lamp emitting 93% of its rated lumen output.

High Frequency – All fluorescent lamps operate more efficiently when driven at frequencies greater than 15 kHz. Four-foot fluorescent lamps operate approximately 10% more efficiently, while eight-foot lamps improve efficiency by about 5%. This efficiency improvement is one reason for the popularity of electronic ballasts.

Temperature

Light output and watts of a fluorescent lamp are affected by the ambient temperature, and by drafts. Most fluorescent lamps reach their maximum light output at room temperatures or at "luminaire temperatures." All-Weather fluorescent lamps are designed with jackets that improve performance in low-temperature environments.

Luminaire

The design of the lighting fixture (luminaire) affects the ambient temperature in which the fluorescent lamps will be operating. A fixture that operates too cool or warm will result in lower light output from the lamps and reduce illumination levels.

Starting

The life of a fluorescent lamp is affected by the number of times the lamp is started. Starting results in shorter lamp life, while continuous operation will provide the longest lamp life. All fluorescent lamps, except where noted, have life ratings based on three hours per start.

General Information

Lumens

Nominal Initial Lumens refer to the nominal light output of the lamp after 100 hours of operation at 25° C. **Nominal Mean Lumens** refer to the nominal light output of the lamp at 40% of its rated life. Some values are based on engineering calculations derived from extrapolation of initial measured lumens.

A self-ballasted lamp is measured using its integral ballast. Lamps without an integral ballast are measured using reference ballasts.

Lumens produced by lamps operated on commercial ballasts may not be equivalent to reference ballast ratings. For lighting design calculations, refer to the ballast manufacturer's published data for the appropriate "Ballast Factor."

Nominal Watts

Wattage is classified in accordance with American National Standards Institute standards for lamp classification purposes and may not be the same as the wattage run on a reference ballast. The nominal wattage as defined by ANSI may vary from the listed wattage. Watts consumed by lamps operated on commercial ballasts may not be equivalent to reference ballast ratings.

Rated Life

The rated life (hours) is the approximate median life when lamps are operated for three hours per start under laboratory conditions using an ANSI reference ballast or GE Lighting specifications where no industry standards exist. Some lamps are rated at 12 hours per start where noted.

Performance Notes:

T8 Lamps:

- Rated life for 2 ft through 4 ft. Starcoat® Ecolux® Medium Bi-Pin T8 Lamps is Rated life on programmed rapid start circuits.
- Rated life for the F40T8 is rated life on rapid start circuits. Rated life for these linear lamps on instant start electronic circuits is reduced by 25%.

T12 Lamps:

- Life of 4' T12 lamps on single-lamp, rapid start ballasts may be reduced.

Color Temperature/Chromaticity

Approximate color temperature of fluorescent is measured using industry standard methods and is based on a nominal 40-watt source. Fluorescent sources operating at different lamp currents will have slightly shifted color appearances when compared to the corresponding 40-watt sources.

Scotopic/Photopic Ratio

This measurement accounts for the fact that of the two light sensors in the retina, rods are more sensitive to blue light (Scotopic Vision) and cones to yellow light (Photopic Vision). The Scotopic/Photopic (S/P) Ratio is an attempt to capture the relative strengths of these two responses. S/P is calculated as the ratio of scotopic lumens to photopic lumens, for the light source, on an ANSI reference ballast. Cooler sources (higher color temperature lamps) tend to have higher values of the S/P Ratio compared to warm sources.

Scotopic/Photopic (S/P) Ratio:

This measurement accounts for the fact that of the two light sensors in the retina, rods are more sensitive to blue light (Scotopic vision) and cones to yellow light (Photopic vision). The Scotopic/Photopic (S/P) Ratio is an attempt to capture the relative strengths of these two responses. Cooler sources (higher color temperature lamps) tend to have higher values of the S/P Ratio compared to warm sources.

T5	S/P Ratio
830	1.3
835	1.5
841	1.7
850	1.9
865	2.2
F28T8	**S/P Ratio**
SP30	1.3
SP35	1.5
SP41	1.8
SP50	2.0

F17 and F25T8	S/P Ratio
SP30	1.3
SP35	1.4
SP41	1.6
F17 and F25T8	**S/P Ratio**
SPX30	1.3
SPX35	1.5
SPX41	1.8
SPX50	2.0
SPX65	2.3

F32 and F32T8/WM	S/P Ratio
SP30	1.3
SP35	1.4
SP41	1.6
SP50	1.9
SP65	2.1
F32T8 and F32T8/HL	**S/P Ratio**
SPX30	1.3
SPX35	1.5
SPX41	1.8
SPX50	2.0
SPX65	2.3

Footnotes

1 Watt-Miser®, Watt-Miser® Plus, F28T8, F32T8/25W and Energy Efficient (/EE) lamps are intended for use where ambient temperatures are 60°F (16°C) or higher and where the lamp surface is protected from strong air drafts. Failure to protect the lamp surface may result in reduced life, poor starting or erratic operation, such as flickering or spiraling. These lamps are not recommended for use with dimming systems. All T12 Watt-Miser® lamps are intended for use on two-lamp, indoor, lead, high power factor ballasts and are not recommended for use with dimming or reduced current systems. The use of T12 Watt-Miser® lamps on single lamp ballasts may shorten lamp life. T12 Rapid Start Watt-Miser® lamps are intended for use only with Rapid Start Ballasts. F34 Rapid Start Watt-Miser® lamps on high frequency electronic systems may display erratic starting before end of life. T8 Watt-Miser® lamps and F28UMX lamps are intended for use only with instant start ballasts. They are, however, also approved for use on GE UltraStart® programmed rapid start ballasts.

3 F40T17/CW/IS lamps are for use only in fixtures equipped with instant start ballasts.

4 Because Power Groove® and Very High Output lamps are most used in commercial applications, the life rating is based on 12 hrs. per start.

6 Bare "Cold Temperature" lamps (as indicated by /CT) and "All Temperature" lamps are designed for use where ambient temperatures drop below 60°F (16°C).

7 Performance data based on engineering estimates.

8 ⚠ **CAUTION:** Risk Group 1 (Low Risk): UV emitted from this lamp. Skin or eye irritation could result. Minimize exposure.

9 ⚠ **WARNING:** Risk Group 3 (High Risk): UV emitted from this lamp. Avoid exposure of eyes and skin to unshielded lamp. Skin or eye injury will result.

10 Shoplites are not recommended to be used on F40 full light output ballasts. Life will be reduced by approximately 50%.

11 Lumen rating based on approximate 3% reduction in light output with covRguard® sleeving.

12 Do not use covRguard® HO lamps in watertight or airtight fixtures.

13 Blocks 100% of UV-B and UV-C. Blocks from 75 to 99% of UV-A, depending on lamp type.

14 Life rating is based on 12 hrs. per start.

15 Lumen rating based on approximate 3% reduction in light output with jacket.

16 Life rating is based on UV maintenance curve and is measured at 80% of initial (100hr) UVC output.

17 Jacketed "Cold Temperature" lamps (as indicated by -CT) are designed for use where ambient temperatures do not rise above 32°F (0°C).

18 T8 lamps run on Instant Start ballasts should not be used in conjunction with electronic controls such as occupancy sensors. The frequent switching will significantly impact lamp life and void any warranties. Programmed Rapid Start ballasts such as GE's UltraStart® ballast should be used in these situations.

19 T5 Starcoat® Ecolux® lamp initial and mean lumen ratings are taken at 95°F (35°C)

20 Rated life is given for programmed start ballasts. Life ratings are based on engineering data with lamps cycled every 3 or 12 operating hours. Lamp life is approximately 25% shorter on instant start ballasts as compared to programmed start ballasts.

21 Rated life is given for programmed start ballasts. Life ratings are based on engineering data with lamps cycled every 3 or 12 operating hours. See chart on page 4-4 for more details.

Warning and Caution Notices

101

⚠ WARNING

Risk of electric shock

- Turn power off before inspection, installation or removal

⚠ CAUTION

Lamp may shatter and cause injury if broken

- Wear safety glasses and gloves when handling lamp
- Do not use excessive force when installing lamp

102

⚠ WARNING

Risk of electric shock

- Turn power off before inspection, installation or removal

⚠ CAUTION

Improper handling may cause breakage

- Do not carry lamp by bracket

Lamp may shatter and cause injury if broken

- Wear safety glasses and gloves when handling lamp
- Do not use excessive force when installing lamp

103

⚠ WARNING

Risk of electric shock

- Turn power off before inspection, installation or removal

104

⚠ WARNING

Risk of electric shock

- Turn power off before inspection, installation or removal
- Avoid direct water/liquid contact

⚠ CAUTION

Lamp may shatter and cause injury if broken

- Wear safety glasses and gloves when handling lamp
- Do not use excessive force when installing lamp

105

⚠ WARNING

Risk of electric shock

- Turn power off before inspection, installation or removal

⚠ CAUTION

Lamp emits UV radiation which may cause eye/skin irritation. RG-1

- Minimize exposure

Lamp may shatter and cause injury if broken

- Wear safety glasses and gloves when handling lamp
- Do not use excessive force when installing lamp

106

⚠ WARNING

Risk of electric shock

- Turn power off before inspection, installation or removal

Lamp emits UV radiation which may cause eye/skin injury. RG-3

- Avoid exposure of eyes and skin to unshielded lamp

⚠ CAUTION

Lamp may shatter and cause injury if broken

- Wear safety glasses and gloves when handling lamp
- Do not use excessive force when installing lamp

107

⚠ WARNING

Risk of electric shock

- Turn power off before inspection, installation or removal
- Do not open – there are no serviceable parts inside
- Do not drill or cut into plastic parts
- Avoid direct water/liquid contact
- Fully insert plug
- Use indoors only

⚠ CAUTION

Lamp may shatter and cause injury if broken

- Wear safety glasses and gloves when handling lamp
- Lamp is not replaceable. Do not attempt to remove lamp from fixture
- Use in permanent installation only — not for portable use

Unit will fail if not installed properly

- Follow installation instructions

108

⚠ WARNING

Risk of electric shock

- Turn power off before inspection, installation or removal
- Avoid direct water/liquid contact

Notes

Compact Fluorescent Lamps

Bulb Identification

NOMINAL LENGTH:
Overall length including base or pins.

Note: Lamp drawings are not drawn to scale. Be sure to check size and dimension information when identifying each lamp.

To convert inches to millimeters, multiply the dimension (in inches) by 25.4 (i.e. 1.5" x 25.4 = 38.1 mm).

Lamp Locator

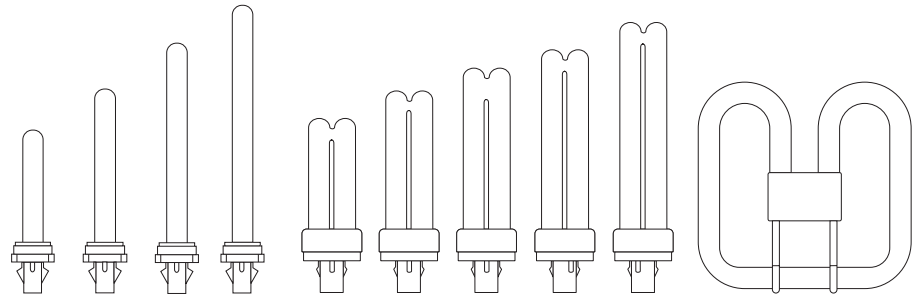

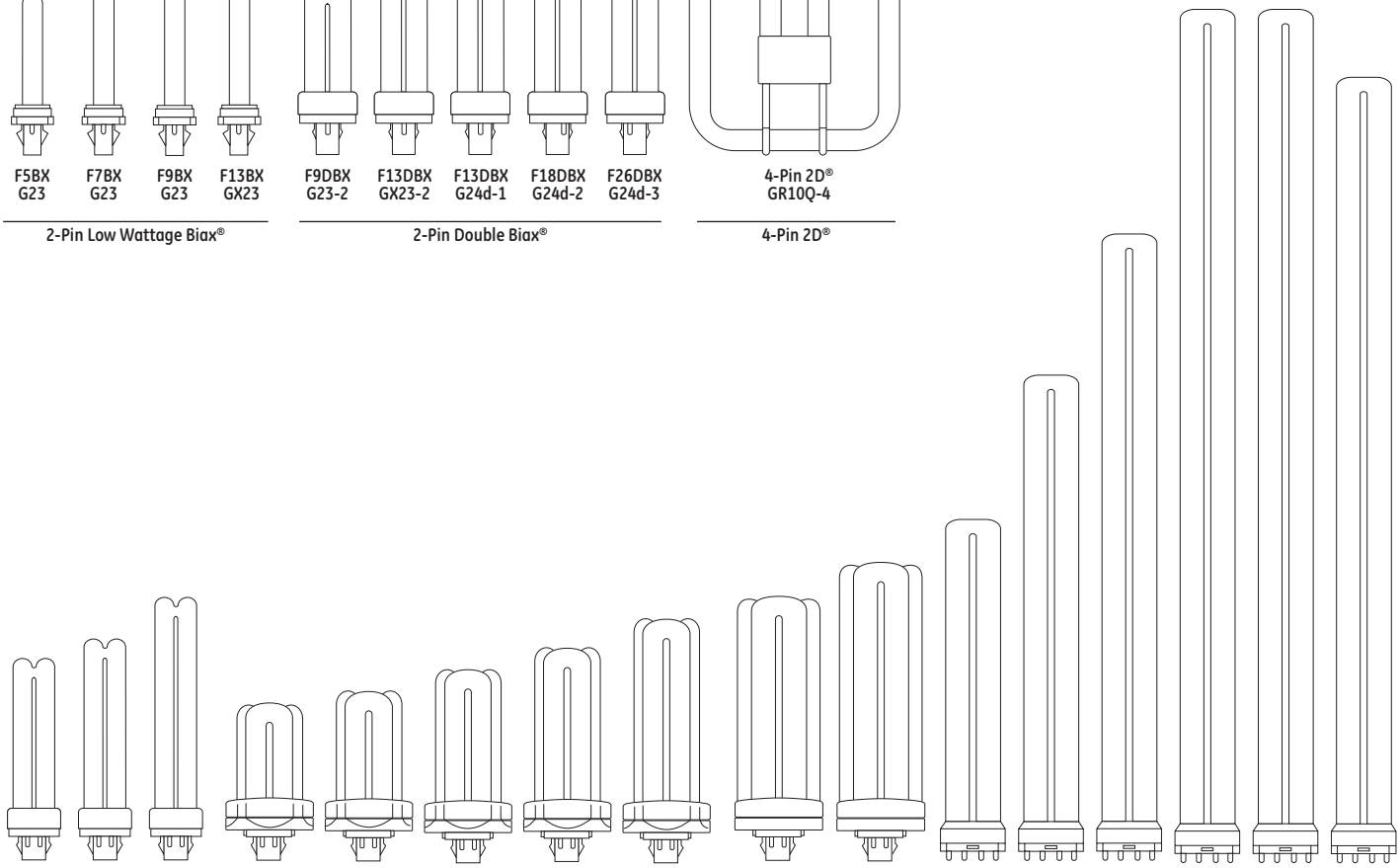

Plug-in Lamps

Lamp Locator (continued)

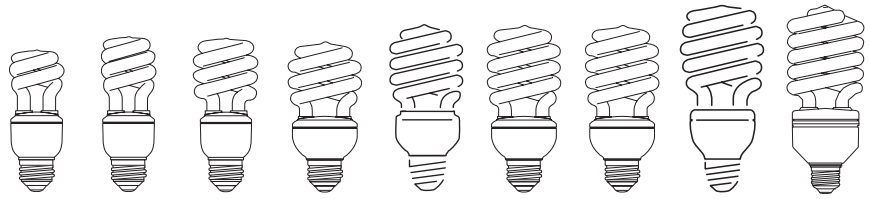

FLE9/10HT3 Med | FLE13HT3 Med | FLE14/15HT3 Med | FLE20HT3 Med | FLE23HT3 Med | FLE26HT3 Med | FLE29HT3 Med | FLE32HT3 Med | FLE42HLX Med

Spiral® T3

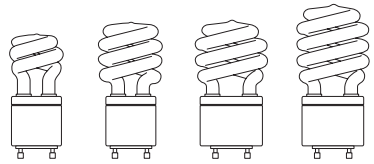

FLE10HT3 Med | FLE15HT3 Med | FLE20HT3 Med | FLE26HT3 Med

GU 24

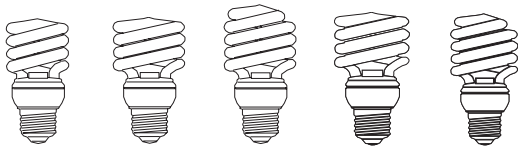

FLE10HT2 Med | FLE13HT2 Med | FLE15HT2 Med | FLE20HT2 Med | FLE26HT2 Med

Spiral® T2

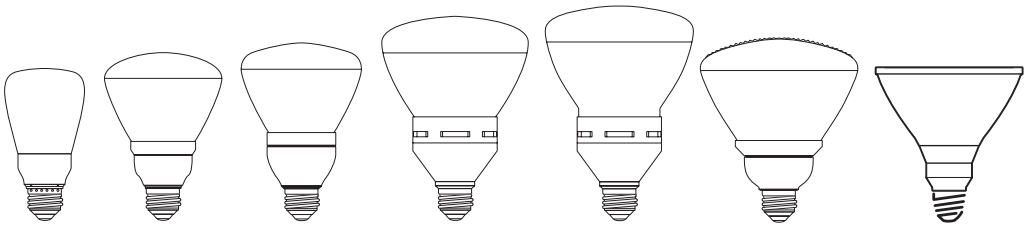

FLE11/R20 Med | FLE15/R30 Med | FLE15/R30 Dimming Med | FLE26/R40 Med | FLE26/R40 Dimming Med | FLE26/PAR38 Med | FLE24/PAR38 Med

Reflectors

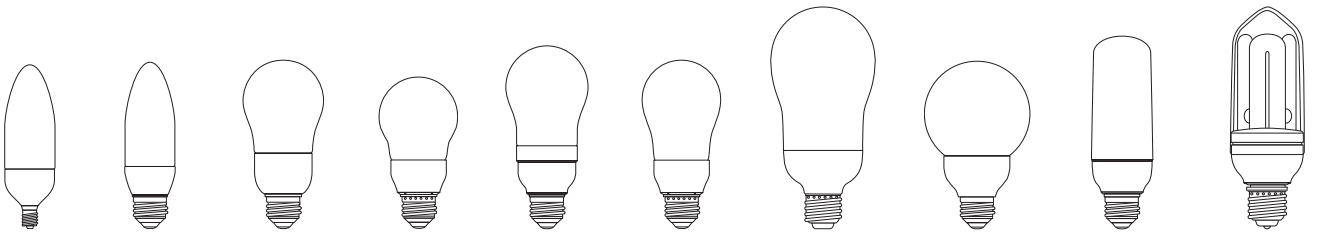

Candle E12 | Candle Med | FLE11/ A-Line Med | FLE12/ A-Line Med | FLE14/ A-Line Med | FLE15/ A-Line Med | FLE20/ A-Line Med | FLE9/ Globe Med | FLE11/ Bug/Post Light Med | FLE15/ Bug/Post Light Med

Decorative Shapes

FLE9/ A-Line Med

Instant Bright

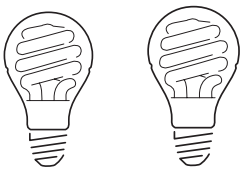

FLE15/ A-Line Med | FLE20/ A-Line Med

Bright From The Start®

Self-Ballasted Lamps

For the most up-to-date product information, see www.gelighting.com.

Compact Fluorescent Lamps

Base Identification

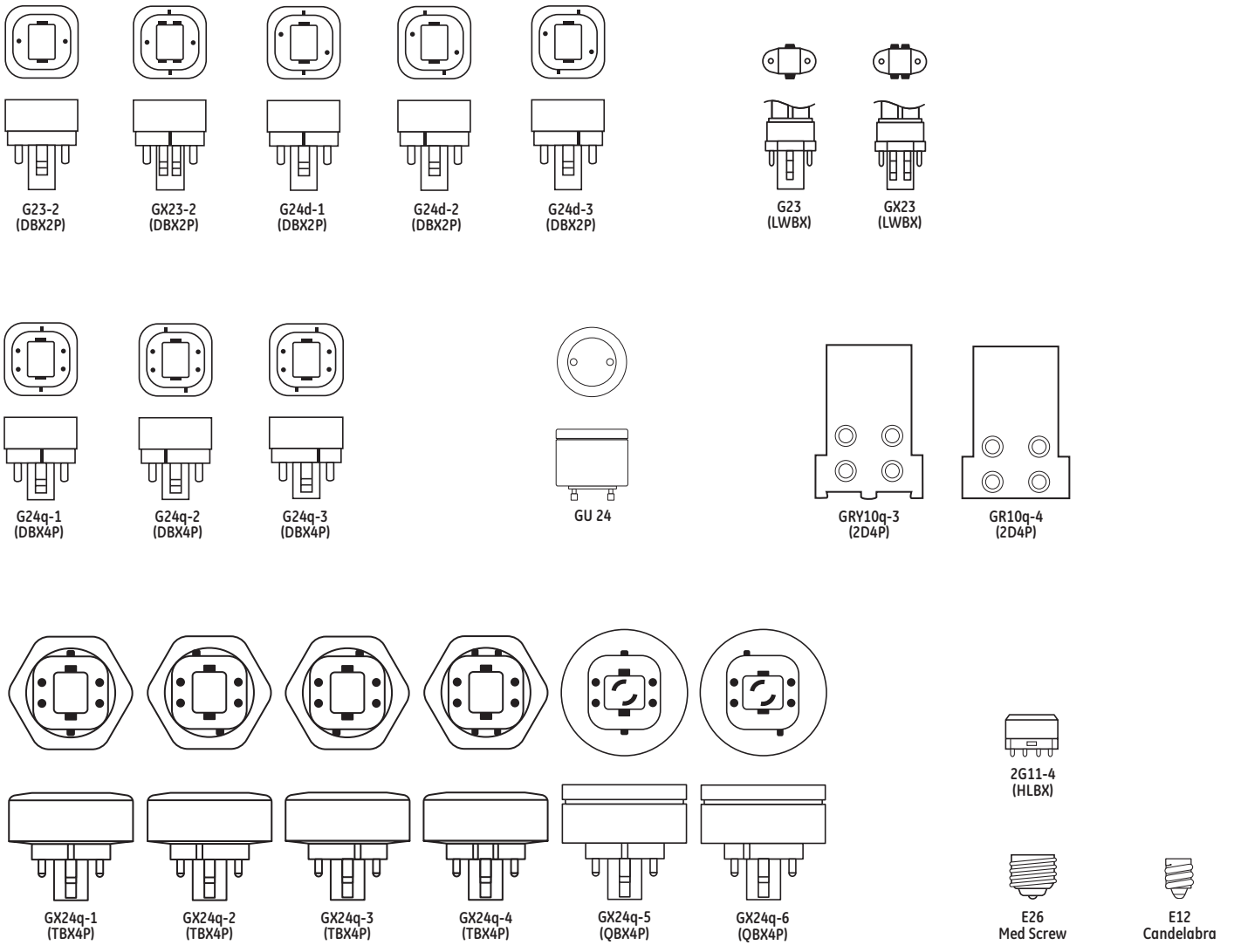

Introduction

GE Compact Fluorescent lamps offer many advantages:

- Dramatic energy cost savings...up to 77% vs. incandescent lamps of comparable light output
- Extra long life...most last 8 to 10 times longer, and some last up to 20 times longer, than standard incandescent lamps
- High light output comparable to, and in many cases exceeding, incandescent lamps replaced
- Excellent color rendering...rare earth tri-phosphor provides such high-quality color you won't believe it's fluorescent. Most types offer a choice of color options, from warm to cool, to let you select the tone and atmosphere you need.
- A choice of wattages, shapes and sizes to meet your lighting needs. Designed to fit everything from table lamps to wall sconces and ceiling fixtures.
- Many lamps use amalgam technology which provides stable lumen performance when operated in any position, over a wider range of ambient temperatures.

Compact Fluorescent Brand Name Cross-Reference

GE	OSRAM/SYLVANIA	PHILIPS
2D®	—	—
Biax®	Dulux® S	PL-S
High Lumen Biax®	Dulux® L	PL-L
Double Biax®	Dulux® D, D/E	PL-C
Triple Biax®	Dulux® T/E	PL-T
Quad Biax®	—	—
High Output Biax®	—	PL-H
Spiral®	Dulux® EL Twist	EL Twist

ATTENTION: This brand-name cross-reference chart is provided only as a quick reference. Other lamp company brand listings may only represent a near equivalent, versus an identical match to GE Lighting brands. Individual lamp manufacturers' performance specifications should be consulted. Lamp performance may be affected by environmental conditions, ballast type and/or other auxiliary equipment.

Product Information

Plug-in Lamps

2-Pin Low Wattage Biax® (pg 5-7)

- Compact size offers fixture and design flexibility
- GX23 and G23 bases are preheat lamps with internal starters
- 13-watt version also available with internal electronic starter, providing flicker-free instant on
- Available in warm and cool color temperatures
- TCLP Compliant

4-Pin High Lumen Biax® (pg 5-7)

- Available in a range of sizes and wattages for innovative compact luminaires
- High efficiency and outstanding performance in fixtures make them ideal for 2X2, 1X1 and indirect fixtures
- Available in warm to cool color temperatures; excellent color rendering

2-Pin Double Biax® (pg 5-8)

- More compact than low-wattage Biax® CFLs with higher lumen output—suitable for a broad range of applications
- Preheat lamps with starters; not suitable for use with dimming ballasts
- 26-watt version also available with internal electronic starter, providing flicker-free instant on
- Available in warm to cool color temperatures
- TCLP Compliant

4-Pin Double Biax® (pg 5-8)

- More compact than low-wattage Biax® CFLs with higher lumen output—suitable for a broad range of applications
- Dimmable and compatible with electronic ballasts
- Available in warm to cool color temperatures
- TCLP Compliant

4-Pin Triple Biax® (pg 5-8)

- GE's shortest, most compact Biax® lamp. 17-31% shorter than similar wattage Double Biax® lamps.
- 4-Pin, dimmable and compatible with electronic ballasts
- Available in a wide range of wattages: from 13 to 42 watts
- Available in warm to cool color temperatures
- TCLP Compliant

4-Pin High Output Biax® (pg 5-9)

- GE's highest light output compact fluorescent lamps
- High efficacy 72-75 LPW
- Dimmable, available in 5 colors (2,700 to 5,000K)
- Suitable for high-bay lighting
- TCLP Compliant

4-Pin 2D® (pg 5-9)

- Unique shape suitable for broad range of applications
- Uniform light distribution
- High light output – up to 200W incandescent equivalent

Self-Ballasted Lamps

Spiral® (pg 5-11)

- Long life – up to 12,000 hours or more
- One-piece unit screws directly into incandescent sockets
- Wide variety of wattages to meet application needs
- T2 & T3 Spiral® CFLs provide economical solution with small overall size
- The 42-watt T4 Spiral® CFL provides a 150W incandescent replacement in the smallest possible size (fits an 8.5" harp)
- Color-enhanced CFL Reveal® mimics the color of incandescent and halogen Reveal® lamps

3-Way (pg 5-12)

- T3 and T4 lamps available

GU 24 (pg 5-12)

- Long life – 10,000 hour rating
- Simple twist and lock design allows quick and easy lamp change
- Fits all fixtures with GU 24 base

Reflectors/Indoor PAR (pg 5-12)

- R20, R30, R40 and PAR38 glass reflectors available to meet application needs
- Medium based; fits most incandescent reflector applications
- R30 and R40 lamps available with dimming functionality

Decorative Shapes (pg 5-13)

- Variety of shapes (A-Line, Bullet, Candle, Globe, and Post) and wattages to meet all needs
- One-piece unit screws directly into incandescent sockets
- Candle-shaped CFLs available in both medium base and candelabra base

Specialty (pg 5-14)

- T3 13-watt Spiral® CFLs are available in green, red, blacklight, orange, yellow and blue

Headings in this catalog section

The following terms and descriptions can help you when checking Compact Fluorescent lamp specifications and when ordering products. Within each product line, lamps are divided into families, within these families, lamps are then listed by wattage.

Light Output – Mean Lumens: Lamp light output (lumens) at 40% of rated lamp life.

Light Output – Initial Lumens: Light output (as defined by FTC Lamp Label Rules) is rated average lumens.

Color Temperature – Kelvins (K): A measure of the visual "warmth" or "coolness" of the light from the lamp. The higher the value, the whiter or "cooler" the light appears.

Rated Life @ 3hrs. per start

Rated Life @ 12hrs. per start

Rated Life – Hours: Life (as defined by FTC Lamp Label Rules) is rated life in hours.

Color Rendering Index (CRI or R_a): An indication of the ability of the lamp to render object colors in a normal, natural way. The higher the number (0-100), the better the color appearance.

Energy Used – Nominal Watts: Energy Used (as defined by FTC lamp label rules). To estimate energy consumption (kWh), multiply watts x hours of use and divide by 1000.

Minimum Starting Temperature: The minimum ambient temperature at which the lamp will start reliably.

Volt: Rated voltage.

Power Factor (PF): The ratio of total watts to total volt-amperes. A value of .5 to .6 is typical for CFLs.

Nominal Length: Lamp length including base and/or pins.

Case Quantity: Number of product units packed in a case.

Total Harmonic Distortion (THD): A measure (in percent) of power quality. Indicates the distortion of the alternating current wave form.

Additional Information: Typical application and/or other important information.

Order Code: It is important to use this five-digit code when ordering to ensure that you receive the exact product you require.

Caution Notice: Related cautions, see page 5-15.

Base: The type of base.

Description: The lamp's identification code.

Footnotes: See page 5-15 for more information.

Base	Watts	Nominal Length (in)	Order Code	Description	Case Qty	Volts	Rated Life (hrs)	Initial Lumens	Mean Lumens	Color Temp K	CRI	Min. Start. Temp (°F)	Power Fact.	THD	TCLP Compliant Plug-Ins	EOL Protection Plug-Ins	Additional Information	Caution Notice	Footnotes
Self-Ballasted Lamps																			
Spiral®																			
Med	10	4.4	15829	FLE10HT3/2/827	10	120	8000	520	420	2700	82	5	0.6	120			T3 Spiral®, Boxed	153	1,7,8,9,10

FL E 10 HT3 / 2 / 827

- FL: Identifies as Fluorescent Lamp
- E: Electronically ballasted
- 10: Identifies wattage
- HT3: Identifies lamp shape
- 2: Identifies additional information
- 827: Identifies lamp's finish or color

WHEN YOU DON'T KNOW THE LAMP DESCRIPTION

1. Identify bulb shape next to lamp information.
2. Measure bulb diameter using ruler in appendix section page D-1 to determine width in eighths of an inch.
3. Identify base type using table on page 5-4.
4. Find your lamp in the table containing the bulb shape, size and base.

Base	Watts	Nom. Length (in)	Order Code	Description	Case Qty	Rated Life (hrs)	Initial Lumens	Mean Lumens	Color Temp K	CRI	Min Starting Temp (°F)	TCLP Compliant Plug-Ins	EOL Protection Plug-Ins	Additional Information	Caution Notice	Footnotes
Plug-in Lamps																
2-Pin Low Wattage Biax®																
G23	5	4.2	97551	F5BX/827/ECO	100	10000	265	220	2700	82	0	✹			151	1,2
	5	4.2	97553	F5BX/841/ECO	100	10000	265	220	4100	82	0	✹			151	1,2
	7	5.3	97554	F7BX/827/ECO	100	10000	425	350	2700	82	0	✹			151	1,2
	7	5.3	97556	F7BX/835/ECO	100	10000	425	350	3500	82	0	✹			151	1,2
	7	5.3	97557	F7BX/841/ECO	100	10000	425	350	4100	82	0	✹			151	1,2
	9	6.6	97558	F9BX/827/ECO	100	10000	600	500	2700	82	0	✹			151	1,2
	9	6.6	97560	F9BX/835/ECO	100	10000	600	500	3500	82	0	✹			151	1,2
	9	6.6	97561	F9BX/841/ECO	100	10000	600	500	4100	82	0	✹			151	1,2
GX23	13	7.0	97573	F13BX/827/ECO	100	10000	825	710	2700	82	32	✹			151	1,2
	13	7.0	97574	F13BX/830/ECO	100	10000	825	710	3000	82	32	✹			151	1,2
	13	7.0	97569	F13BX/835/ECO	100	10000	825	710	3500	82	32	✹			151	1,2
	13	7.0	97571	F13BX/841/ECO	100	10000	825	710	4100	82	32	✹			151	1,2
	13	7.0	97572	F13BX/850/ECO	100	10000	784	675	5000	80	32	✹			151	1,2
	13	7.0	97563	F13BX/E/830/ECO	100	10000	825	710	3000	82	-4	✹		Internal Electronic Starter	151	1,2
4-Pin High Lumen Biax®																
2G11	18	9.0	16649	F18BX/SPX30 10PK	40	10000	1200	1080	3000	82	25				151	1,2,4,6
	18	9.0	16053	F18BX/SPX35 10PK	40	10000	1200	1080	3500	82	25				151	1,2,4,6
	18	9.0	16940	F18BX/SPX41 10PK	40	10000	1200	1080	4100	82	25				151	1,2,4,6
	18	10.0	17174	F18BXSPX30RS10PK	40	20000	1250	1130	3000	82	50				151	1,2,6,13
	18	10.5	17175	F18BXSPX35RS10PK	40	20000	1250	1130	3500	82	50				151	1,2,6,13
	18	10.5	12521	F18BX/SPX65/RS	40	20000	1160	1050	6500	82	50				151	1,2,6,13
	27	12.8	16944	F27BXSPX30RS10PK	40	12000	1800	1620	3000	82	50				151	1,2,6,13
	27	12.8	16948	F27BXSPX35RS10PK	40	12000	1800	1620	3500	82	50				151	1,2,6,13
	27	12.8	16951	F27BXSPX41RS10PK	40	12000	1800	1620	4100	82	50				151	1,2,6,13
	39	16.5	16538	F39BXSPX30RS10PK	40	12000	2850	2510	3000	82	50				151	1,2,6,13
	39	16.5	15867	F39BXSPX35RS10PK	40	12000	2850	2510	3500	82	50				151	1,2,6,13
	39	16.5	16952	F39BXSPX41RS10PK	40	12000	2850	2510	4100	82	50				151	1,2,6,13
	40	22.5	16953	F4030BXSPX30 10P	40	20000	3150	2840	3000	82	50				151	1,2,6,13
	40	22.5	20444	F40/30BXSPX30-36	36	20000	3150	2840	3000	82	50			Bulk Pack	151	1,2,6,13
	40	22.5	16648	F40/30BX/SPX35	40	20000	3150	2840	3500	82	50				151	1,2,6,13
	40	22.5	20446	F40/30BXSPX35-36	36	20000	3150	2840	3500	82	50			Bulk Pack	151	1,2,6,13
	40	22.5	16954	F40/30BX/SPX41	40	20000	3150	2840	4100	82	50				151	1,2,6,13
	40	22.5	20447	F40/30BXSPX41-36	36	20000	3150	2840	4100	82	50			Bulk Pack	151	1,2,6,13
	40	22.5	10490	F40/30BX/SPX50RS	36	20000	2900	2700	5000	80	50			Bulk Pack	151	1,2,6,13
	25	21.5	75399	F40/25BX830/IS/WM	40	20000	2600	2400	3000	82	50				151	1,2,6,13
	25	21.5	75400	F40/25BX835/IS/WM	40	20000	2600	2400	3500	82	50				151	1,2,6,13
	25	21.5	75401	F40/25BX840/IS/WM	40	20000	2600	2400	4100	82	50				151	1,2,6,13
	25	21.5	75402	F40/25BX850/IS/WM	40	20000	2600	2400	5000	82	50				151	1,2,6,13
	50	22.5	20898	F50BXSPX30RS10PK	40	20000	4000	3400	3000	82	50				151	1,2,6,13
	50	22.5	20899	F50BXSPX35RS10PK	40	20000	4000	3400	3500	82	50				151	1,2,6,13
	50	22.5	20900	F50BXSPX41RS10PK	40	20000	4000	3400	4100	82	50				151	1,2,6,13
	55	20.7	31951	F55BX/830	25	20000	4800	4080	3000	82	50				151	1,2,6,13
	55	20.7	31952	F55BX/835	25	20000	4800	4080	3500	82	50				151	1,2,6,13
	55	20.7	31953	F55BX/840	25	20000	4800	4080	4100	82	50				151	1,2,6,13

For the most up-to-date product information, see www.gelighting.com. To convert inches to millimeters, multiply by 25.4.
All footnotes and caution notices found at the end of this section (page 5-15).

Compact Fluorescent Lamps

Base	Watts	Nom. Length (in)	Order Code	Description	Case Qty	Rated Life (hrs)	Rated Life @ 12 Hrs	Initial Lumens	Mean Lumens	Color Temp K	CRI	Min Starting Temp (°F)	TCLP Compliant Plug-Ins	EOL Protection Plug-Ins	Additional Information	Caution Notice	Footnotes
Plug-in Lamps (continued)																	
2-Pin Double Biax®																	
G23-2	9	5.5	97576	F9DBX23/827/ECO	50	12000		550	470	2700	82		✸			151	1,2,17
	9	5.5	97575	F9DBX23/841/ECO	50	12000		550	470	4100	82		✸			151	1,2,17
GX23-2	13	4.7	97586	F13DBX23/827/ECO	50	12000		810	685	2700	82		✸			151	1,2,17
	13	4.7	97587	F13DBX23/830/ECO	50	12000		810	685	3000	82		✸			151	1,2,17
	13	4.7	97588	F13DBX23/835/ECO	50	12000		810	685	3500	82		✸			151	1,2,17
	13	4.7	97589	F13DBX23/841/ECO	50	12000		810	685	4100	82		✸			151	1,2,17
G24d-1	13	5.3	97590	F13DBX/827/ECO	50	12000		900	755	2700	82		✸			151	1,2,17
	13	5.3	97591	F13DBX/830/ECO	50	12000		900	755	3000	82		✸			151	1,2,17
	13	5.3	97592	F13DBX/835/ECO	50	12000		900	755	3500	82		✸			151	1,2,17
	13	5.3	97593	F13DBX/841/ECO	50	12000		900	755	4100	82		✸			151	1,2,17
G24d-2	18	6.1	97577	F18DBX/827/ECO	50	12000		1250	980	2700	82		✸			151	1,2,5,17
	18	6.1	97578	F18DBX/830/ECO	50	12000		1250	980	3000	82		✸			151	1,2,5,17
	18	6.1	97579	F18DBX/835/ECO	50	12000		1250	980	3500	82		✸			151	1,2,5,17
	18	6.1	97580	F18DBX/841/ECO	50	12000		1250	980	4100	82		✸			151	1,2,5,17
G24d-3	26	6.7	97606	F26DBX/827/ECO	50	12000		1710	1460	2700	82		✸			151	1,2,17
	26	6.7	97607	F26DBX/830/ECO	50	12000		1710	1460	3000	82		✸			151	1,2,17
	26	6.7	97608	F26DBX/835/ECO	50	12000		1710	1460	3500	82		✸			151	1,2,17
	26	6.7	97609	F26DBX/841/ECO	50	12000		1710	1460	4100	82		✸			151	1,2,17
	26	6.7	97602	F26DBX/E/827/ECO	50	10000		1710	1460	2700	82		✸		Internal Electronic Starter	151	1,2,15,17
	26	6.7	97604	F26DBX/E/835/ECO	50	10000		1710	1460	3500	82		✸		Internal Electronic Starter	151	1,2,15,17
4-Pin Double Biax®																	
G24q-1	13	5.0	97594	F13DBX/827/ECO4P	50	17000	20000	900	755	2700	82		✸	▲		151	1,2,6,17,18
	13	5.0	97595	F13DBX/830/ECO4P	50	17000	20000	900	755	3000	82		✸	▲		151	1,2,6,17,18
	13	5.0	97596	F13DBX/835/ECO4P	50	17000	20000	900	755	3500	82		✸	▲		151	1,2,6,17,18
	13	5.0	97597	F13DBX/841/ECO4P	50	17000	20000	900	755	4100	82		✸	▲		151	1,2,6,17,18
G24q-2	18	5.8	97598	F18DBX/827/ECO4P	50	17000	20000	1250	970	2700	82		✸	▲		151	1,2,5,6,17,18
	18	5.8	97599	F18DBX/830/ECO4P	50	17000	20000	1250	970	3000	82		✸	▲		151	1,2,5,6,17,18
	18	5.8	97600	F18DBX/835/ECO4P	50	17000	20000	1250	970	3500	82		✸	▲		151	1,2,5,6,17,18
	18	5.8	97601	F18DBX/841/ECO4P	50	17000	20000	1250	970	4100	82		✸	▲		151	1,2,5,6,17,18
G24q-3	26	6.4	97610	F26DBX/827/ECO4P	50	17000	20000	1800	1530	2700	82		✸	▲		151	1,2,6,17,18
	26	6.4	97611	F26DBX/830/ECO4P	50	17000	20000	1800	1530	3000	82		✸	▲		151	1,2,6,17,18
	26	6.4	97612	F26DBX/835/ECO4P	50	17000	20000	1800	1530	3500	82		✸	▲		151	1,2,6,17,18
	26	6.4	97613	F26DBX/841/ECO4P	50	17000	20000	1800	1530	4100	82		✸	▲		151	1,2,6,17,18
4-Pin Triple Biax®																	
GX24q-1	13	4.2	97623	F13TBX827/4P/ECO	10	17000	20000	900	755	2700	82		✸	▲	Non-Amalgam	151	1,2,6,17,18
	13	4.2	97619	F13TBX/827/A/ECO	10	17000	20000	900	755	2700	82		✸	▲		151	1,2,6,12,17,18
	13	4.2	97620	F13TBX/830/A/ECO	10	17000	20000	900	755	3000	82		✸	▲		151	1,2,6,12,17,18
	13	4.2	97621	F13TBX/835/A/ECO	10	17000	20000	900	755	3500	82		✸	▲		151	1,2,6,12,17,18
	13	4.2	97622	F13TBX/841/A/ECO	10	17000	20000	900	755	4100	82		✸	▲		151	1,2,6,12,17,18
GX24q-2	18	4.8	97628	F18TBX827/4P/ECO	10	17000	20000	1200	1010	2700	82		✸	▲	Non-Amalgam	151	1,2,6,17,18
	18	4.8	97624	F18TBX/827/A/ECO	10	17000	20000	1200	1010	2700	82		✸	▲		151	1,2,6,12,17,18
	18	4.8	97625	F18TBX/830/A/ECO	10	17000	20000	1200	1010	3000	82		✸	▲		151	1,2,6,12,17,18
	18	4.8	97626	F18TBX/835/A/ECO	10	17000	20000	1200	1010	3500	82		✸	▲		151	1,2,6,12,17,18
	18	4.8	97627	F18TBX/841/A/ECO	10	17000	20000	1200	1020	4100	82		✸	▲		151	1,2,6,12,17,18
GX24q-3	26	5.2	97618	F26TBX827/4P/ECO	10	17000	20000	1800	1530	2700	82		✸	▲	Non-Amalgam	151	1,2,6,17,18
	26	5.2	97614	F26TBX/827/A/ECO	10	17000	20000	1800	1530	2700	82		✸	▲		151	1,2,6,12,17,18
	26	5.2	97615	F26TBX/830/A/ECO	10	17000	20000	1800	1530	3000	82		✸	▲		151	1,2,6,12,17,18
	26	5.2	97616	F26TBX/835/A/ECO	10	17000	20000	1800	1530	3500	82		✸	▲		151	1,2,6,12,17,18
	26	5.2	97617	F26TBX/841/A/ECO	10	17000	20000	1800	1530	4100	82		✸	▲		151	1,2,6,12,17,18

For the most up-to-date product information, see www.gelighting.com. To convert inches to millimeters, multiply by 25.4.
All footnotes and caution notices found at the end of this section (page 5-15).

Plug-in Lamps (continued)

Base	Watts	Nom. Length (in)	Order Code	Description	Case Qty	Rated Life (hrs)	Rated Life 12 Hrs	Life In Years	Energy Cost $/Year	Initial Lumens	Mean Lumens	Color Temp K	CRI	Min Starting Temp (°F)	TCLP Compliant Plug-Ins	EOL Protection Plug-Ins	Additional Information	Caution Notice	Footnotes
4-Pin Triple Biax® (continued)																			
GX24q-3 	32	5.5	97629	F32TBX/827/A/ECO	10	17000	20000			2400	2040	2700	82		✹	▲		151	1,2,6,12,17,18
	32	5.5	97630	F32TBX/830/A/ECO	10	17000	20000			2400	2040	3000	82		✹	▲		151	1,2,6,12,17,18
	32	5.5	97631	F32TBX/835/A/ECO	10	17000	20000			2400	2040	3500	82		✹	▲		151	1,2,6,12,17,18
	32	5.5	97632	F32TBX/841/A/ECO	10	17000	20000			2400	2040	4100	82		✹	▲		151	1,2,6,12,17,18
	32	5.5	65337	F32TBX/850/A/ECO	10	17000	20000			2400	2040	5000	82			▲			
GX24q-4 	42	6.4	97633	F42TBX/827/A/ECO	10	17000	20000			3200	2690	2700	82		✹	▲		151	1,2,6,12,17,18
	42	6.4	97634	F42TBX/830/A/ECO	10	17000	20000			3200	2690	3000	82		✹	▲		151	1,2,6,12,17,18
	42	6.4	97635	F42TBX/835/A/ECO	10	17000	20000			3200	2690	3500	82		✹	▲		151	1,2,6,12,17,18
	42	6.4	97636	F42TBX/841/A/ECO	10	17000	20000			3200	2690	4100	82		✹	▲		151	1,2,6,12,17,18
	42	6.4	65338	F42TBX/850/A/ECO	10	17000	20000			3200	2690	5000	82			▲			
4-Pin High Output Biax®																			
GX24q-5 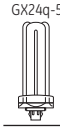	57	7.1	48861	F57QBX827A4P/EOL	10	17000	20000			4300	3700	2700	82		✹	▲		151	1,2,6,12,17,18
	57	7.1	48863	F57QBX835A4P/EOL	10	17000	20000			4300	3700	3500	82		✹	▲		151	1,2,6,12,17,18
	57	7.1	48864	F57QBX/841/A/ECO	10	17000	20000			4300	3700	4100	82		✹	▲		151	1,2,6,12,17,18
	57	5.2	93404	F57QBX850A4P/EOL	10	17000	20000			4300	3700	5000	82		✹	▲		151	1,2,6,12,17,18
GX24q-6 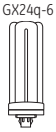	70	8.2	48865	F70QBX827A4P/EOL	10	17000	20000			5200	4470	2700	82		✹	▲		151	1,2,6,12,17,18
	70	8.2	48866	F70QBX830A4P/EOL	10	17000	20000			5200	4470	3000	82		✹	▲		151	1,2,6,12,17,18
	70	8.2	48867	F70QBX835A4P/EOL	10	17000	20000			5200	4470	3500	82		✹	▲		151	1,2,6,12,17,18
	70	8.2	48868	F70QBX/841/A/ECO	10	17000	20000			5200	4470	4100	82		✹	▲		151	1,2,6,12,17,18
	70	8.2	93406	F70QBX850A4P/EOL	10	17000	20000			5200	4470	5000	82		✹	▲		151	1,2,6,12,17,18
4-Pin 2D®																			
GR10q-4 	10	3.6	21301	F102D/827/4P	60	10000				650	545	2700	82					151	1,2,3,6
	16	5.5	22169	F162D/827/4P	50	10000				1050	880	2700	82					151	1,2,3,6
	16	5.5	22177	F162D/835/4P	50	10000				1050	880	3500	82					151	1,2,3,6
	21	5.5	21303	F212D/827/4P	50	10000				1350	1135	2700	82					151	1,2,3,6
	21	5.5	22178	F212D/835/4P	50	10000				1350	1135	3500	82					151	1,2,3,6
	28	8.1	22172	F282D/827/4P	20	10000				2050	1720	2700	82					151	1,2,3,6
	28	8.1	22180	F282D/835/4P	20	10000				2050	1720	3500	82					151	1,2,3,6
	38	8.1	21305	F382D/827/4P	20	10000		9.1	$4.58	2850	2395	2700	82		✹			151	1,2,3,6
	38	8.1	22181	F382D/835/4P	20	10000				2850	2395	3500	82		✹			151	1,2,3,6
GRY10q-3 	55	8.1	36358	F552D/830A/T4P/B	20	10000				4000	3400	3000	82				Torchiere Replacement Lamp	151	1,2,3,6

Compact Fluorescent Lamps

Base	Watts	Nominal Length (in)	Order Code	Description	Case/ Std. Pkg Qty	Volts	Initial Lumens	Mean Lumens	Color Temp K	CRI	Min. Start. Temp (°F)	Power Factor	THD	Rated Life (hrs)	Life In Years	Energy Cost $/Year	Additional Information	Caution Notice	Footnotes
Self-Ballasted Lamps																			
Bright From The Start® A Shape																			
Med	20	5.2	63504	FLE20HB21/2/SWCD	6	120	1100	880	2700K	82	-15	0.5	<85	8000	7.3	$2.45	BFTS A-Shape A21	GE2023-6025	19,20,21
Bright From The Start® Decorative Globes																			
Med	11	4.6	60310	FLE11HBG25SW	6	120	500	400	2700K	82	-15	0.5	<85	8000	7.3	$1.35	BFTS Decorative Globe G25	GE2023-6025	19,20,21
	15	4.6	87432	FLE15HBG25SW	6	120	800	640	2700K	82	-15	0.5	<85	8000	7.3	$1.84	BFTS Decorative Globe G25	GE2023-6025	19,20,21
Reveal® Globes																			
Med	11	4.6	61353	FLEG25XLRVLTP6	6	120	450	360	2490K	70	-15	0.5	<85	10000	9.1	$1.32	Reveal® Globe G25	GE2000-2946	1,8,10,12,19,20,21
	11	4.6	67464	FLE11G25XLRVL/BX	6	120	450	360	2490K	70	-15	0.5	<85	10000	9.1	$1.32	Reveal® Globe G25	GE2000-2946	19,20,21
Reveal® Reflectors																			
Med	11	4.7	61354	FLE11R20XLRVLTP	6	120	340	272	2490K	70	-10	0.5	<85	10000	9.1	$1.32	Reveal® Reflector R20	GE2000-2946	1,8,10,12,19,20,21
	11	4.7	67463	FLE11R20XLRVL/BX	6	120	340	272	2490K	70	-10	0.5	<85	10000	9.1	$1.32	Reveal® Reflector R20	GE2024-7456	19,20,21
Med	15	5.3	61164	FLE15R30/RVL-TP6	6	120	620	496	2490K	70	-15	0.5	<85	10000	9.1	$1.81	Reveal® Reflector R30	GE2000-2946	1,8,10,12,19,20,21
	15	5.3	67461	FLE15R30/RVL/BX	4	120	620	496	2490K	70	-15	0.5	<85	10000	9.1	$1.81	Reveal® Reflector R30	GE2024-7456	19,20,21
	15	5.5	63522	FLE15/DVR30RVLCD	3	120	500	400	2490K	70	-5	0.5	<85	8000	7.3	$1.81	Reveal® Reflector R30 Dimming	GE2025-1509	19,21
Med	26	6.5	61355	FLE26R40XLRVLTP6	6	120	1150	920	2490K	70	-10	0.5	<85	10000	9.1	$3.13	Reveal® Reflector R40	GE2000-2946	1,8,10,12,19,20,21
	26	6.5	89860	FLE26R40RVLBXTP	4	120	1150	920	2490K	70	-10	0.5	<85	10000	9.1	$3.13	Reveal® Reflector R40	GE2024-7456	19,20,21
	26	6.6	67467	FLE26R40RVL/BXHH	4	120	1100	880	2490K	70	-15	0.5	<85	8000	7.3	$3.13	Reveal® Reflector R40	GE2025-1509	19,20,21
	26	6.6	66668	FLE26/DMR40RVLCD	3	120	1100	880	2490K	70	-15	0.5	<85	8000	7.3	$3.13	Reveal® Reflector R40 Dimming	GE2025-1509	19,21
Reveal® Spiral® 3-Way																			
Med	32	6.0	67466	FLE32HT3D3RVL/BX	6	120	540/ 1440/ 1935	1548	2490K	70	-15	0.5	<85	8000	7.3	$3.85/ $3.01/ $1.93	Reveal® T3 3-Way	GE2000-0950	19,20,21
	32	6.0	62908	FLE32HTD3RVL/CD	6	120	540/ 1440/ 1935	1548	2490K	70	-15	0.5	<85	8000	7.3	$1.93/ $3.01/ $3.85	Reveal® T3 3-Way Shorter Design	GE2000-0948	1,8,9,16,19,20,21,22
Reveal® Spiral® T3																			
Med	10	4.1	75405	FLE10HT3/2/RVL/CD	3	120	450	360	2490K	70	-15	0.6	<85	8000	7.3	$1.20	Reveal® T3 Spiral®	GE2000-0948	1,7,8,9,10,19,20,21,22
	10	4.1	67451	FLE10HT3/2RVLBX2	6	120	450	360	2490K	70	-15	0.5	<85	8000	7.3	$1.20	Reveal® T3 Spiral®	GE2000-2709	19,20,21,22
	10	4.1	75409	FLE10HT3/2RVLCD2	3	120	450	360	2490K	70	-15	0.5	<85	8000	7.3	$1.20	Reveal® T3 Spiral®	GE2000-2709	19,20,21,22
	10	4.1	84249	FLE10HT3/2RVLBX2	6	120	450	360	2490K	70	-15	0.5	<85	8000	7.3	$1.20	Reveal® T3 Spiral®	GE2000-2709	19,20,21,22
Med	13	4.1	75406	FLE13HT3/2/RVL/CD	3	120	800	640	2490K	70	-15	0.6	<85	8000	7.3	$1.57	Reveal® T3 Spiral®	GE2000-0948	1,7,8,9,10,19,20,21,22
	13	4.1	67452	FLE13HT3/2RVLBX2	6	120	800	640	2490K	70	-15	0.5	<85	8000	7.3	$1.57	Reveal® T3 Spiral®	GE2000-2709	19,20,21,22
	13	4.1	62906	FLE13HT3/2RVLBX4	6	120	800	640	2490K	70	-15	0.5	<85	8000	7.3	$1.57	Reveal® T3 Spiral®	GE2000-2709	19,20,21,22
	13	4.1	75411	FLE13HT3/2RVLCD2	3	120	800	640	2490K	70	-15	0.5	<85	8000	7.3	$1.57	Reveal® T3 Spiral®	GE2000-2709	19,20,21,22
Med	20	4.7	75407	FLE20HT3/2/RVL/CD	3	120	1200	960	2490K	70	-15	0.6	<85	8000	7.3	$2.41	Reveal® T3 Spiral®	GE2000-0948	1,7,8,9,10,19,20,21,22
	20	4.7	84252	FLE20HT3/2RVLBX2	6	120	1200	960	2490K	70	-15	0.5	<85	8000	7.3	$2.41	Reveal® T3 Spiral®	GE2000-2709	19,20,21,22
	20	4.7	67453	FLE20HT3/2RVLBX2	6	120	1200	960	2490K	70	-15	0.5	<85	8000	7.3	$2.41	Reveal® T3 Spiral®	GE2000-2709	19,20,21,22
Med	26	5.2	75408	FLE26HT3/2/RVL/CD	3	120	1570	1256	2490K	70	-15	0.6	<85	8000	7.3	$3.13	Reveal® T3 Spiral®	GE2000-0948	1,7,8,9,10,19,20,21,22
	26	5.2	84262	FLE26HT3/2RVLBX4	3	120	1570	1256	2490K	70	-15	0.5	<85	8000	7.3	$3.13	Reveal® T3 Spiral®	GE2000-2709	19,20,21,22
	26	5.2	67454	FLE26HT3/2RVLBX2	6	120	1570	1256	2490K	70	-15	0.5	<85	8000	7.3	$3.13	Reveal® T3 Spiral®	GE2000-2709	19,20,21,22
	26	5.2	66354	FLE26HT3/2RVLBX4	3	120	1570	1256	2490K	70	-15	0.5	<85	8000	7.3	$3.13	Reveal® T3 Spiral®	GE2000-2709	19,20,21,22
	26	5.2	75413	FLE26HT3/2RVLCD2	3	120	1570	1256	2490K	70	-15	0.5	<85	8000	7.3	$3.13	Reveal® T3 Spiral®	GE2000-2709	19,20,21,22
	26	5.2	84253	FLE26HT3/2RVLBX2	6	120	1570	1256	2490K	70	-15	0.5	<85	8000	7.3	$3.13	Reveal® T3 Spiral®	GE2000-2709	19,20,21,22
	14	5.1	67465	FLE14HT3/DMRVLBX	4	120	800	640	2490K	70	-10	0.5	<85	8000	7.3	$1.69	Reveal® T3 Spiral® Dimming	GE2000-0951	19,21,22
	26	5.7	63521	FLE26HT3/DMRVLCD	3	120	1560	1248	2490K	70	-5	0.5	<85	10000	9.1	$3.13	Reveal® T3 Spiral® Dimming	GE2000-0951	19,21,22
	26	5.7	67468	FLE26HT3/DMRVLBX	4	120	1560	1248	2490K	70	-5	0.5	<85	10000	9.1	$3.13	Reveal® T3 Spiral® Dimming	GE2000-0951	19,21,22
Reveal® Bright From The Start® A Shape																			
Med	15	4.4	67459	FLE15HB19/2RVLBX	6	120	740	592	2490K	70	-15	0.5	<85	8000	7.3	$1.84	Reveal BFTS A shape A19	GE2023-6025	19,20,21
	19	5.2	63509	FLE19HB21/2RVLCD	6	120	950	760	2490K	70	-15	0.5	<85	8000	7.3	$2.33	Reveal BFTS A shape A21	GE2023-6025	19,20,21
	25	5.8	95143	FLE25HBA23RVLWB	6	120	1375	1100	2490K	70	-15	0.5	<85	6000	5.5	$3.07	Reveal BFTS A shape A23	GE2023-6025	19,20,21
	25	5.8	87461	FLE25HBA23RVLCD	6	120	1375	1100	2490K	70	-15	0.5	<85	6000	5.5	$3.07	Reveal BFTS A shape A23	GE2023-6025	19,20,21

For the most up-to-date product information, see www.gelighting.com. To convert inches to millimeters, multiply by 25.4.
All footnotes and caution notices found at the end of this section (page 5-15).

Base	Watts	Nominal Length (in)	Order Code	Description	Case/ Std. Pkg Qty	Volts	Initial Lumens	Mean Lumens	Color Temp K	CRI	Min. Start. Temp (°F)	Power Factor	THD	Rated Life (hrs)	Life In Years	Energy Cost $/Year	Additional Information	Caution Notice	Footnotes
Self-Ballasted Lamps (continued)																			
Spiral® T2																			
Cand	13	4.3	75368	FLE13HT2/2CAND2P		120	850	680	2700K	82	-15	0.6	<85	8000	7.3	$1.57	T2 Spiral®	GE2000-0948	1,7,8,9,10,19,20,21,22
Med	10	3.5	86241	FLE10HT2/2/827	10	120	580	464	2700K	82	-10	0.5	<85	12000	11.0	$1.20	T2 Spiral®	GE2000-0948	1,7,8,9,10,19,20,21,22
	10	3.5	85382	FLE10HT2/2/SW/CD	3	120	580	464	2700K	82	-10	0.5	<85	12000	11.0	$1.20	T2 Spiral®	GE2000-0948	1,7,8,9,10,19,20,21,22
	10	3.5	68504	FLE10HT2SWXL/BX3	4	120	580	464	2700K	82	-10	0.5	<85	12000	11.0	$1.20	T2 Spiral®	GE2000-2709	19,20,21,22,25
	10	3.5	68510	FLE10HT2SWXL/BX6	4	120	580	464	2700K	82	-10	0.5	<85	12000	11.0	$1.20	T2 Spiral®	GE2000-2709	19,20,21,22,25
	10	3.5	85389	FLE10HT2/2/SW2PK	3	120	580	464	2700K	82	-10	0.5	<85	12000	11.0	$1.20	T2 Spiral®	GE2000-2709	19,20,21,22,25
	10	3.7	72468	FLE10HT2/6H/CWCD	3	120	580	464	4000K	82	-10	0.5	<85	8000	7.3	$1.20	T2 Spiral®	GE2000-2709	19,20,21,22
	10	3.5	68518	FLE10HT2D/XL/BX3	4	120	550	440	5000K	82	-10	0.5	<85	12000	11.0	$1.20	T2 Spiral®	GE2000-2709	19,20,21,22,25
	10	3.7	72471	FLE10HT2/6H/D/CD	3	120	550	440	6500K	82	-10	0.5	<85	8000	7.3	$1.20	T2 Spiral®	GE2000-2709	19,20,21,22
Med	13	3.9	86256	FLE13HT2/2/827	10	120	870	696	2700K	82	-10	0.5	<85	12000	11.0	$1.57	T2 Spiral®	GE2000-0948	1,7,8,9,10,19,20,21,22
	13	3.9	85390	FLE13HT2/2/SW2PK	3	120	870	696	2700K	82	-10	0.5	<85	12000	11.0	$1.57	T2 Spiral®	GE2000-2709	19,20,21,22,25
	13	3.8	72472	FLE13HT2/6H/D/CD	3	120	825	660	6500K	82	-10	0.5	<85	8000	7.3	$1.57	T2 Spiral®	GE2000-2709	19,20,21,22
Med	20	4.1	72880	FLE20HT2/2/XL/CD	3	120	1300	1040	2700K	82	-10	0.6	<85	12000	11.0	$2.41	T2 Spiral®	GE2000-0948	1,7,8,9,10,19,20, 21,22,25
	20	4.1	62951	FLE20HT2/12H/DCD	3	120	1300	1040	5000K	82	-10	0.6	<85	12000	11.0	$2.41	T2 Spiral®	GE2000-0948	1,7,8,9,10,19,20, 21,22,25
	20	4.1	72875	FLE20HT2/2/XL/2P	3	120	1300	1040	2700K	82	-10	0.5	<85	12000	11.0	$2.41	T2 Spiral®	GE2000-2709	19,20,21,22,25
	20	4.1	68520	FLE20HT2D/XL/BX3	4	120	1300	1040	5000K	82	-10	0.5	<85	12000	11.0	$2.41	T2 Spiral®	GE2000-2709	19,20,21,22,25
Spiral® T3																			
Med	9	4.2	42165	FLE9H/T3/2/827	10	120	520	416	2700K	82	-15	0.6	<85	10000	9.1	$1.08	T3 Spiral®	GE2000-0948	1,7,8,9,10,19,20,21,22
	9	4.2	42171	FLE9H/T3/2/841	10	120	520	416	4100K	82	-15	0.6	<85	10000	9.1	$1.08	T3 Spiral®	GE2024-7455	1,7,8,9,11,19,20,21,22
	9	4.0	49906	FLE10HT3/2/SW/CD FLE9HT3/2/SW/CD	12	120	520	416	2700K	82	-15	0.6	<85	10000	9.1	$1.08	T3 Spiral®	GE2000-0948	1,7,8,9,10,19,20,21,22
	9	4.0	49907	FLE10HT32SWCD2PK FLE9HT32SWCD2PK	3	120	520	416	2700K	82	-15	0.6	<85	10000	9.1	$1.08	T3 Spiral®	GE2000-0948	1,7,8,9,10,19,20,21,22
	9	4.0	65670	FLE9HT3/2SW/BX4	3	120	520	416	2700K	82	-15	0.5	<85	10000	9.1	$1.08	T3 Spiral®	GE2024-7455	19,20,21,22
	9	4.0	74196	FLE9HT3/2/SW/BX	10	120	520	416	2700K	82	-15	0.5	<85	10000	9.1	$1.08	T3 Spiral®	GE2024-7455	19,20,21,22
	9	4.0	74197	FLE9HT3/2/BX/2P	6	120	520	416	2700K	82	-15	0.5	<85	10000	9.1	$1.08	T3 Spiral®	GE2024-7455	19,20,21,22
	9	4.0	73156	FLE9HT3/2/SW5PK	5	120	520	416	2700K	82	-15	0.5	<85	10000	9.1	$1.08	T3 Spiral®	GE2024-7455	19,20,21,22
	10	4.4	80936	FLE10HT3/2/XL	10	120	550	440	2700K	80	-15	0.6	<85	12000	11.0	$1.20	T3 Spiral®	GE2000-0948	1,7,8,9,10,19,20,21,22
Med	13	4.5	16459	FLE13HT3/2/SW/2P	3	120	825	660	2700K	82	-15	0.6	<85	10000	9.1	$1.57	T3 Spiral®	GE2000-0948	1,7,8,9,10,19,20,21,22
	13	4.4	42159	FLE13H/T3/2/827	10	120	825	660	2700K	82	-15	0.6	<85	10000	9.1	$1.57	T3 Spiral®	GE2024-7455	1,7,8,9,11,19,20,21,22
Med	14	4.5	94543	FLE14HT3/2/827	10	120	950	760	2700K	82	-10	0.6	<85	10000	9.1	$1.69	T3 Spiral®	GE2000-0948	1,7,8,9,10,19,20, 21,22,25
	14	4.5	94542	FLE14HT3/2/841	10	120	950	760	4100K	82	-10	0.6	<85	10000	9.1	$1.69	T3 Spiral®	GE2000-0948	1,7,8,9,10,19,20, 21,22,25
	14	4.5	89091	FLE15HT3/2/D/CD FLE14HT3/2/D/CD	3	120	900	720	5000K	82	-10	0.6	<85	10000	9.1	$1.69	T3 Spiral®		19,20,21,22,25
	14	4.5	65425	FLE14HT3/2-PK4/6	6	120	950	760	4100K	82	-10	0.5	<85	10000	9.1	$1.69	T3 Spiral®	GE2000-2709	19,20,21,22,25
	14	4.5	67445	FLE14HT3/41BX2HH	6	120	950	760	4100K	82	-10	0.5	<85	10000	9.1	$1.69	T3 Spiral®	GE2000-2709	19,20,21,22,25
	14	4.5	64005	FLE14HT3/2DBX2/6	6	120	900	720	5000K	82	-10	0.5	<85	10000	9.1	$1.69	T3 Spiral®	GE2000-2709	19,20,21,22,25
	15	4.8	80937	FLE15HT3/2/XL/SW	10	120	950	760	2700K	80	-15	0.6	<85	12000	11.0	$1.81	T3 Spiral®	GE2000-0948	1,7,8,9,10,19,20, 21,22
	15	4.8	47435	FLE15HT3/2/XL/CD	12	120	950	760	2700K	80	-15	0.6	<85	12000	11.0	$1.81	T3 Spiral®	GE2000-0948	1,7,8,9,10,19,20, 21,22
	15	4.9	64801	FLE15HT3/2SX/827	6	120	975	780	2700K	82	-15	0.5	<85	15000	13.7	$1.81	T3 Spiral®	GE2000-0948	1,7,8,9,10,19,20, 21,22,25
	15	4.9	69659	FLE15HT3XXLL/5BX	3	120	975	780	2700K	82	-15	0.5	<85	15000	13.7	$1.81	T3 Spiral®	GE2000-2709	19,20,21,22,25
Med	20	4.4	15834	FLE20HT3/2/827	10	120	1300	1040	2700K	82	-15	0.6	<85	10000	9.1	$2.41	T3 Spiral®	GE2000-0948	1,7,8,9,10,19,20, 21,22,25
	20	4.4	15516	FLE20HT3/2/SW/CD	12	120	1300	1040	2700K	82	-15	0.6	<85	10000	9.1	$2.41	T3 Spiral®	GE2000-0948	1,7,8,9,10,19, 20,21,22,25
	20	4.4	25186	FLE20HT3/2/841	10	120	1300	1040	4100K	82	-15	0.6	<85	10000	9.1	$2.41	T3 Spiral®	GE2000-0948	1,7,8,9,10,19,20, 21,22,25
	20	5.3	80888	FLE20HT3/2/XL827	10	120	1200	960	2700K	80	-15	0.6	<85	12000	11.0	$2.41	T3 Spiral®	GE2000-0948	1,7,8,9,10,19,20,21,22
	20	4.8	64802	FLE20HT3/2SX/827	6	120	1300	1040	2700K	82	-15	0.5	<85	15000	13.7	$2.41	T3 Spiral®	GE2000-0948	1,7,8,9,11,19,20, 21,22,25
	20	4.7	71764	FLE20HT3/2/6S/TP	6	120	1235	988	5000K	82	-15	0.6	<85	8000	7.3	$2.41	T3 Spiral®	GE2000-0948	1,7,8,9,10,19,20,21,22
	20	4.4	89094	FLE20HT3/2/D/CD	12	120	1300	1040	5000K	82	-15	0.6	<85	10000	9.1	$2.41	T3 Spiral®	GE2000-0948	1,7,8,9,10,19,20, 21,22,25
	20	4.4	74201	FLE20HT3/2/BX2PK	6	120	1300	1040	2700K	82	-15	0.5	<85	10000	9.1	$2.41	T3 Spiral®	GE2000-2709	19,20,21,22,25
	20	4.8	69656	FLE20HT3XXLL/2BX	3	120	1300	1040	2700K	82	-15	0.5	<85	15000	13.7	$2.41	T3 Spiral®	GE2000-2709	19,20,21,22,25

For the most up-to-date product information, see www.gelighting.com. To convert inches to millimeters, multiply by 25.4.
All footnotes and caution notices found at the end of this section (page 5-15).

Compact Fluorescent Lamps

Base	Watts	Nominal Length (in)	Order Code	Description	Case/ Std. Pkg Qty	Volts	Initial Lumens	Mean Lumens	Color Temp K	CRI	Min. Start. Temp (°F)	Power Factor	THD	Rated Life (hrs)	Life In Years	Energy Cost $/Year	Additional Information	Caution Notice	Footnotes
Self-Ballasted Lamps (continued)																			
Spiral® T3 (continued)																			
Med	20	4.4	71284	FLE20HT3/2/SW6PK	6	120	1300	1040	2700K	82	-15	0.5	<85	10000	9.1	$2.41	T3 Spiral®	GE2000-2709	19,20,21,22,25
	20	4.4	65672	FLE20HT3/2SW/BX4	3	120	1300	1040	2700K	82	-15	0.5	<85	10000	9.1	$2.41	T3 Spiral®	GE2000-2709	19,20,21,22,25
	20	4.4	74200	FLE20HT3/2/SW/BX	10	120	1300	1040	2700K	82	-15	0.5	<85	10000	9.1	$2.41	T3 Spiral®	GE2000-2709	19,20,21,22,25
	20	4.4	76993	FLE20HT3/2/CB/BX	10	120	1300	1040	2700K	82	-15	0.5	<85	10000	9.1	$2.41	T3 Spiral®	GE2000-2709	19,20,21,22,25
	20	4.4	97249	FLE20HT3/2/SW5PK	5	120	1300	1040	2700K	82	-15	0.5	<85	10000	9.1	$2.41	T3 Spiral®	GE2000-2709	19,20,21,22,25
	20	4.4	97690	FLE20HT3/2/SWBX3	4	120	1300	1040	2700K	82	-15	0.5	<85	10000	9.1	$2.41	T3 Spiral®	GE2000-2709	19,20,21,22,25
	20	4.4	49587	FLE20HT32SWCD3PK	3	120	1300	1040	2700K	82	-15	0.5	<85	10000	9.1	$2.41	T3 Spiral®	GE2000-2709	19,20,21,22,25
	20	4.4	64006	FLE20HT3/2DBX2/6	6	120	1300	1040	5000K	82	-15	0.5	<85	10000	9.1	$2.41	T3 Spiral®	GE2000-2709	19,20,21,22,25
Med	23	5.1	80889	FLE23HT3/2/XL827	10	120	1600	1280	2700K	80	-15	0.6	<85	12000	11.0	$2.77	T3 Spiral®	GE2000-0948	1,7,8,9,10,19,20,21,22
	23	4.7	42164	FLE23H/T3/2/827	10	120	1650	1320	2700K	82	-15	0.6	<85	10000	9.1	$2.77	T3 Spiral®	GE2000-0948	1,7,8,9,11,19,20,21,22
	23	4.8	15517	FLE23HT3/2/SW/CD	12	120	1600	1280	2700K	82	-15	0.6	<85	10000	9.1	$2.77	T3 Spiral®	GE2000-0948	1,7,8,9,10,19,20,21,22
	23	4.8	94546	FLE23HT3/2/841	10	120	1600	1280	4000K	82	-15	0.6	<85	10000	9.1	$2.77	T3 Spiral®	GE2000-0948	1,7,8,9,10,19,20,21,22
	23	4.8	89095	FLE26HT3/2/D/CD	12	120	1600	1280	6500K	82	-15	0.6	<85	10000	9.1	$2.77	T3 Spiral®	GE2000-0948	1,7,8,9,10,19,20,21,22
Med	26	4.7	80890	FLE26HT3/2/XL827	10	120	1700	1360	2700K	80	-15	0.6	<85	12000	11.0	$3.13	T3 Spiral®	GE2000-0948	1,7,8,9,10,19,20,21,22
Spiral® T3 Dimming																			
Med	14	5.0	66662	FLE14HT3/2DM/BX	3	120	950	760	2700K	82	-10	0.5	<85	10000	9.1	$1.69	T3 Spiral® Dimming	GE2000-0951	19,21,22,25
	26	5.7	66663	FLE26HT3/2DM/BX	3	120	1700	1360	2700K	82	-10	0.5	<85	10000	9.1	$3.13	T3 Spiral® Dimming	GE2010-9353	19,21,22,24
Spiral® T4 and T5 Hi Lumen																			
Med	29	5.2	81514	FLE29HLX/2XL/827	10	120	2200	1760	2700K	80	-15	0.6	<85	12000	11.0	$3.49	T4 Spiral®	GE2000-0948	1,7,8,9,10,19,20,21,22
	32	6.3	24684	FLE32HLX/2/SW/BX	12	120	2100	1680	2700K	80	-15	0.5	<85	8000	7.3	$3.85	T4 Spiral®	GE2000-2709	19,20,21,22
	42	7.0	80891	FLE42HLX/2/XL827	10	120	2730	2184	2700K	82	-15	0.6	<85	12000	11.0	$5.06	T4 Spiral®	GE2000-0948	1,7,8,9,10,19,20, 21,22,25
	42	7.0	97728	FLE42HLX/2/SW/BX	4	120	2730	2184	2700K	82	-15	0.5	<85	12000	11.0	$5.06	T4 Spiral®	GE2000-2709	19,20,21,22,25
	55	5.5	78965	FLE55HT5/2/SW/BX	4	120	3800	3040	2700K	82	-15	0.6	<85	8000	7.3	$6.62	T5 Spiral®	GE2000-0948	1,7,8,9,10,19,20,21,22
Spiral® 3-Way																			
Med	26	5.7	77123	FLE26HT3/2D/3BX	6	120	1750/ 1150/ 600	1400	2700K	80	-15	0.6	<85	10000	9.1	$1.57/ $2.29/ $3.13	T3 Spiral®, 3-way	GE2000-0948	1,7,8,9,10,19,20,21,22
	26	5.7	77124	FLE26HT3/2D3CD	3	120	1750/ 1150/ 600	1400	2700K	80	-15	0.6	<85	10000	9.1	$1.57/ $2.29/ $3.13	T3 Spiral®, 3-way	GE2000-0948	1,7,8,9,10,19,20,21,22
Med	32	5.8	78952	FLE32HT3/2D3/BX	6	120	600/ 1600/ 2150	1720	2700K	82	-15	0.5	<85	10000	9.1	$1.93/ $3.01/ $3.85	T3 Spiral®, 3-way	GE2000-0948	1,8,9,16,19,20,21,22,25
	32	6.0	62070	FLE32HT3/2D3CWBX	6	120	600/ 1600/ 2150	1720	4000K	82	-15	0.5	<85	8000	7.3	$1.93/ $3.01/ $3.85	T3 Spiral®, 3-way	GE2000-0948	1,7,9,10,19,20,21,22
	32	6.0	63517	FLE32HT3/2D3/DBX	6	120	540/ 1440/ 1935	1548	6500K	70	-15	0.5	<85	8000	7.3	$1.93/ $3.01/ $3.85	T3 Spiral®, 3-way	GE2000-0950	19,20,21,22
	32	5.8	63482	FLE32HT3/2D3/CD	6	120	600/ 1600/ 2150	1720	2700K	82	-15	0.5	<85	10000	9.1	$1.93/ $3.01/ $3.85	T3 Spiral®, 3-way	GE2000-0950	19,20,21,25
Spiral® GU 24																			
Med	10	3.5	76135	FLE10HT3/2GU24CD	3	120	550	440	2700K	80	-15	0.6	<85	10000	9.1	$1.20	T3 GU 24 Base	GE2000-0948	1,8,9,10,19,20,21,22
	15	4.1	75367	FLE15HT3/2GU24CD	3	120	1000	800	2700K	82	-15	0.6	<85	10000	9.1	$1.81	T3 GU 24 Base	GE2000-0948	1,8,9,10,19,20,21,22
	20	4.1	76136	FLE20HT3/2GU24CD	3	120	1200	960	2700K	80	-15	0.6	<85	10000	9.1	$2.41	T3 GU 24 Base	GE2000-0948	1,8,9,10,19,20,21,22
	26	4.6	76137	FLE26HT3/2GU24CD	3	120	1750	1400	2700K	80	-15	0.6	<85	10000	9.1	$3.13	T3 GU 24 Base	GE2000-0948	1,8,9,10,19,20,21,22
Reflectors/Indoor PAR																			
Med	26	6.6	66667	FLE26PAR38DM/BX	3	120	1300	1040	2700K	82	-15	0.5	<85	8000	7.3	$3.13	PAR38 Dimming	GE2025-1509	19,21,23
	11	4.2	78948	FLE11/2/R20/D/CD	3	120	370	296	6500K	82	-15	0.6	<85	10000	9.1	$1.32	Relector R20	GE2000-2946	1,8,9,10,12,19,20,21
	11	4.7	80892	FLE11/2/R20XL827	10	120	400	320	2700K	80	-10	0.6	<85	10000	9.1	$1.32	Relector R20	GE2000-2946	1,8,9,10,12,19,20,21
	11	4.7	47477	FLE11/2/R20XL/CD	12	120	400	320	2700K	80	-10	0.6	<85	10000	9.1	$1.32	Relector R20	GE2000-2946	1,8,9,10,12,19,20,21
	11	4.7	24691	FLE11/2R20XLSWCD	3	120	400	320	2700K	80	-10	0.5	<85	10000	9.1	$1.32	Relector R20	GE2024-7456	19,20,21
	11	4.7	85278	FLE11/2/R20SW/BX	6	120	400	320	2700K	80	-10	0.5	<85	10000	9.1	$1.32	Relector R20	GE2024-7456	19,20,21
	11	4.7	76131	FLE11/2/R20XL/2P	3	120	400	320	2700K	80	-10	0.5	<85	10000	9.1	$1.32	Relector R20	GE2024-7456	19,20,21
	11	4.2	85279	FLE11/2/R20D/BX	6	120	370	296	6500K	82	-15	0.5	<85	10000	9.1	$1.32	Relector R20	GE2000-2946	19,20,21
Med	15	5.3	78950	FLE15/2/R30/D/CD	3	120	650	520	6500K	82	-15	0.6	<85	10000	9.1	$1.81	Reflector R30	GE2000-2946	1,8,9,10,12,19,20,21
	16	5.3	20708	FLE15/2/R30/SWCD FLE16/2/R30/SWCD	12	120	750	600	2700K	80	-15	0.6	<85	10000	9.1	$1.93	Reflector R30	GE2024-7456	1,8,9,10,12,19,20,21
	16	5.3	80893	FLE16/2/R30XL827	10	120	750	600	2700K	80	-15	0.6	<85	10000	9.1	$1.93	Reflector R30	GE2000-2946	1,8,9,10,12,19,20,21
	16	5.3	47478	FLE16/2/R30XL/CD	12	120	750	600	2700K	80	-15	0.6	<85	10000	9.1	$1.93	Reflector R30	GE2000-2946	1,8,9,10,12,19,20,21

For the most up-to-date product information, see www.gelighting.com. To convert inches to millimeters, multiply by 25.4.
All footnotes and caution notices found at the end of this section (page 5-15).

Base	Watts	Nominal Length (in)	Order Code	Description	Case/ Std. Pkg Qty	Volts	Initial Lumens	Mean Lumens	Color Temp K	CRI	Min. Start. Temp (°F)	Power Factor	THD	Rated Life (hrs)	Life In Years	Energy Cost $/Year	Additional Information	Caution Notice	Footnotes
Self-Ballasted Lamps (continued)																			
Reflectors/Indoor PAR (continued)																			
Med	16	5.3	72984	FLE16/2/R30/2P	3	120	750	600	2700K	80	-15	0.5	<85	10000	9.1	$1.93	Reflector R30	GE2024-7456	19,20,21
	15	5.5	66664	FLE15/2DMR30/BX	3	120	550	440	3000K	82	-5	0.5	<85	8000	7.3	$1.81	Reflector R30 Dimming	GE2025-1509	19,21
Outdoor																			
Med	14	5.1	49894	FLE11/2TC14SWCD FLE14/2TC16SW/CD	3	120	750	600	2700K	82	-15	0.6	<85	10000	9.1	$1.69	Post Light	GE2000-2946	1,8,10,12,19,20,21
	14	4.9	49895	FLE11/2TC14BUGCD FLE14/2TC16BUGCD	3	120	750	600	2700K	80	-15	0.6	<85	10000	9.1	$1.69	Bug Yellow Post Light	GE2000-2946	1,8,10,12,19,20,21
	14	4.9	47464	FLE14/2/TC16/BUG	12	120	750	600	2700K	80	-15	0.5	<85	10000	9.1	$1.69	Bug Yellow Post Light	GE2000-2946	1,8,10,12,19,20,21
	14	5.1	85384	FLE14/2/TC16SWCD	12	120	750	600	2700K	82	-15	0.5	<85	10000	9.1	$1.69	Bullet Shape	GE2000-2946	1,8,10,12,19,20,21
	24	5.4	78964	FLE24/2PAR38FLCD	3	120	1185	948	2700K	80	-15	0.6	<85	10000	9.1	$2.89	Par 38 Flat Lens	GE2010-3449	1,8,9,12,16,19,20,21
Med	26	5.9	21739	FLE26/2/PAR38/CD	3	120	1300	1040	2700K	80	-10	0.6	<85	10000	9.1	$3.13	Par 38 Glass Reflector	GE2010-3449	1,8,9,12,16,19,20,21
	26	5.9	80895	FLE26/2/PAR38/XL	6	120	1300	1040	2700K	80	-10	0.6	<85	10000	9.1	$3.13	Par 38 Glass Reflector	GE2010-3449	1,8,9,12,16,19,20,21
	26	5.9	47483	FLE26/2PAR38XCD	3	120	1300	1040	2700K	80	-10	0.6	<85	10000	9.1	$3.13	Par 38 Glass Reflector	GE2010-3449	1,8,9,12,16,19,20,21
	26	5.9	82004	FLE26/2PAR38/BX	6	120	1300	1040	2700K	80	-10	0.5	<85	10000	9.1	$3.13	Par 38 Glass Reflector	GE2010-3449	19,20,21,23
	26	5.9	73157	FLE26/2/PAR382P	3	120	1300	1040	2700K	80	-10	0.5	<85	10000	9.1	$3.13	Par 38 Glass Reflector	GE2010-3449	19,20,21,23
Decorative Ceiling Fan Medium Base																			
Med	11	4.4	78939	FLE11/2/A17/D/CD	3	120	460	368	6500K	80	-15	0.6	<85	10000	9.1	$1.32	A-Line Shape A17	GE2000-2946	1,8,10,12,19,20,21
	11	4.4	78940	FLE11/2/A17/D/3P	3	120	460	368	6500K	80	-15	0.6	<85	10000	9.1	$1.32	A-Line Shape A17	GE2000-2946	1,8,10,12,19,20,21
	11	4.4	47486	FLE11/2/A17XL/CD	12	120	500	400	2700K	82	-15	0.6	<85	10000	9.1	$1.32	A-Line Shape A17	GE2000-2946	1,8,10,12,19,20,21
	11	4.4	49687	FLE11/2/A17XL2PK	3	120	500	400	2700K	82	-15	0.5	<85	10000	9.1	$1.32	A-Line Shape A17	GE2000-2946	19,20,21
Decorative Ceiling Fan Candelabra Base																			
Cand	11	4.4	78937	FLE11/2/A17CB/CD	3	120	500	400	2700K	82	-15	0.6	<85	10000	9.1	$1.32	A-Line Shape A17, Candelabra Base	GE2000-2946	1,8,10,12,19,20,21
	11	4.4	78938	FLE11/2/A17CB/3P	3	120	500	400	2700K	82	-15	0.6	<85	10000	9.1	$1.32	A-Line Shape A17, Candelabra Base	GE2000-2946	1,8,10,12,19,20,21
	11	4.3	78941	FLE11/2A17CBD/CD	3	120	460	368	6500K	82	-15	0.6	<85	10000	9.1	$1.32	A-Line Shape A17, Candelabra Base	GE2000-2946	1,8,10,12,19,20,21
Decorative A Shapes																			
Med	11	4.1	89622	FLE11/2/A19XL	10	120	500	400	2700K	82	-15	0.6	<85	10000	9.1	$1.32	A-Line Shape A19	GE2000-2946	1,8,10,12,19,20,21
	15	4.5	89632	FLE15/2/A19XL	10	120	825	660	2700K	82	-15	0.6	<85	10000	9.1	$1.81	A-Line Shape A19	GE2000-2946	1,8,10,12,19,20,21
	20	5.6	89634	FLE20/2/A19XL	10	120	1100	880	2700K	82	-15	0.6	<85	10000	9.1	$2.41	A-Line Shape A19	GE2024-7456	1,8,10,12,19,20,21
	15	4.8	47487	FLE15/2/A21XL/CD	12	120	800	640	2700K	80	-15	0.6	<85	10000	9.1	$1.81	A-Line Shape A21	GE2000-2946	1,8,10,12,19,20,21
Decorative Bullet																			
Med	20	5.3	89635	FLE20/2/T19XL	10	120	1100	880	2700K	82	-15	0.6	<85	8000	7.3	$2.41	Bullet Shape	GE2000-2946	1,8,10,12,19,20,21
	26	5.9	89636	FLE26/2/T21XL	10	120	1350	1080	2700K	82	-15	0.6	<85	10000	9.1	$3.13	Bullet Shape	GE2000-2946	1,8,10,12,19,20,21
Decorative Candle Candelabra Base																			
Cand	9	5.5	85388	FLE9/2/CAC/SW/CD	12	120	400	320	2700K	82	-15	0.6	<85	10000	9.1	$1.08	Candle Shape, Candelabra Base	GE2000-2946	1,8,10,12,19,20,21
	9	5.5	16105	FLE9/2CAC/XL/827	10	120	400	320	2700K	82	-15	0.6	<85	10000	9.1	$1.08	Candle Shape, Candelabra Base	GE2000-2946	1,8,10,12,19,20,21
	9	4.3	60299	FLE9/3/CAC/SWBX3	4	120	380	304	2700K	82	-10	0.5	<85	8000	7.3	$1.08	Candle Shape, Candelabra Base	GE2000-2946	19,20,21
	9	4.3	60295	FLE9/3/CAC/SSBX3	4	120	380	304	5000K	82	-10	0.5	<85	8000	7.3	$1.08	Candle Shape, Candelabra Base	GE2000-2946	19,20,21
	14	5.2	60300	FLE14/3/CACSWBX3	4	120	650	520	2700K	82	-10	0.5	<85	8000	7.3	$1.69	Candle Shape, Candelabra Base	GE2000-2946	19,20,21
	14	5.2	60296	FLE14/3/CACSSBX3	4	120	650	520	5000K	82	-10	0.5	<85	8000	7.3	$1.69	Candle Shape, Candelabra Base	GE2000-2946	19,20,21
Decorative Candle Medium Base																			
Med	9	5.4	47488	FLE9/2/CAM/XL/CD	12	120	430	344	2700K	80	-15	0.6	<85	10000	9.1	$1.08	Candle Shape, Med Base	GE2000-2946	1,8,10,12,19,20,21
	9	4.8	60297	FLE9/3/CAM/SWBX3	4	120	380	304	2700K	82	-10	0.5	<85	8000	7.3	$1.08	Candle Shape, Med Base	GE2000-2946	19,20,21
	9	4.8	60292	FLE9/3/CAM/SSBX3	4	120	380	304	5000K	82	-10	0.5	<85	8000	7.3	$1.08	Candle Shape, Med Base	GE2000-2946	19,20,21
	9	5.4	24692	FLE9/2/CAM/SW/CD	12	120	430	344	2700K	82	-15	0.5	<85	6000	5.5	$1.08	Candle Shape, Med Base	GE2000-2946	19,20,21
	9	5.5	79068	FLE9/2/CAC/XL2PK	3	120	430	344	2700K	82	-15	0.5	<85	10000	9.1	$1.08	Candle Shape, Med Base	GE2000-2946	19,20,21
	14	5.4	60298	FLE14/3/CAMSWBX3	4	120	650	520	2700K	82	-10	0.5	<85	8000	7.3	$1.69	Candle Shape, Med Base	GE2000-2946	19,20,21
	14	5.4	60294	FLE14/3/CAMSSBX3	4	120	650	520	5000K	82	-10	0.5	<85	8000	7.3	$1.69	Candle Shape, Med Base	GE2000-2946	19,20,21

For the most up-to-date product information, see www.gelighting.com. To convert inches to millimeters, multiply by 25.4.
All footnotes and caution notices found at the end of this section (page 5-15).

Compact Fluorescent Lamps

Base	Watts	Nominal Length (in)	Order Code	Description	Case/ Std. Pkg Qty	Volts	Initial Lumens	Mean Lumens	Color Temp K	CRI	Min. Start. Temp (°F)	Power Factor	THD	Rated Life (hrs)	Life In Years	Energy Cost $/Year	Additional Information	Caution Notice	Footnotes
Self-Ballasted Lamps (continued)																			
Decorative Globes																			
Med	9	3.2	74587	FLE9/3/G18/3PK	3	120	360	288	2700K	80	0	0.5	<85	8000	7.3	$1.08	Globe G18	GE2000-2946	19,20,21
	9	3.2	74586	FLE9/3/G18/CD	3	120	360	288	2700K	80	0	0.5	<85	8000	7.3	$1.08	Globe G18	GE2000-2946	19,20,21
	11	4.6	89629	FLE11/2/G25XL	10	120	500	400	2700K	82	-15	0.6	<85	10000	9.1	$1.32	Globe G25	GE2000-2946	1,8,10,12,19,20,21
	11	4.6	47484	FLE11/2/G25XL/CD	12	120	500	400	2700K	82	-15	0.6	<85	10000	9.1	$1.32	Globe G25	GE2000-2946	1,8,10,12,19,20,21
	11	4.6	78946	FLE11/2/G25/D/CD	3	120	450	360	6500K	82	-15	0.6	<85	10000	9.1	$1.32	Globe G25	GE2000-2946	1,8,10,12,19,20,21
	11	4.6	78947	FLE11/2/G25/D/3P	3	120	450	360	6500K	82	-15	0.6	<85	10000	9.1	$1.32	Globe G25	GE2000-2946	1,8,10,12,19,20,21
	11	4.6	85392	FLE11/2/G25XL3PK	3	120	500	400	2700K	82	-15	0.5	<85	10000	9.1	$1.32	Globe G25	GE2000-2946	19,20,21
	11	4.6	89096	FLE11/2/G25XL2PK	3	120	500	400	2700K	82	-15	0.5	<85	10000	9.1	$1.32	Globe G25	GE2000-2946	19,20,21
Specialty																			
Colored Spiral®																			
Med	13	4.9	78957	FLE13HT3/2/BL	6	120	NA	NA	NA	NA	5	0.6	<85	8000	7.3	$1.57	T3, Blacklight, Boxed	GE2000-0948	1,8,9,10
	13	4.9	78958	FLE13HT3/2/ORANGE	6	120	NA	NA	NA	NA	5	0.6	<85	8000	7.3	$1.57	T3, Orange, Boxed	GE2000-0948	1,8,9,10
	13	4.9	78959	FLE13HT3/2/YELLOW	6	120	NA	NA	NA	NA	5	0.6	<85	8000	7.3	$1.57	T3, Yellow, Boxed	GE2000-0948	1,8,9,10
Film and TV Lighting HLBX 4-Pin																			
2G11	55	20.7	41873	F55BX/STUDIOBX56	40		4100		5600	89				10000			High color rendering. Ideal for TV studios, live broadcasts. Color tuned to match tungsten and daylight light sources.		
	55	20.7	41903	F55BX/CINPLUS/32	40		2400		3200	92				2000			High color rendering. Soft light used in film applications. GEL free light source. Matches the color spectrum of film. LB and CC +/-5.		
	55	20.7	41911	F55BX/CINPLUS/55	40		2400		5500	95				2000			High color rendering. Soft light used in film applications. GEL free light source. Matches the color spectrum of film. LB and CC +/-5.		

For the most up-to-date product information, see www.gelighting.com. To convert inches to millimeters, multiply by 25.4.
All footnotes and caution notices found at the end of this section (page 5-15).

Footnotes

1 Fluorescent lamp lumens decline during life.

2 Based on 60Hz reference circuit.

3 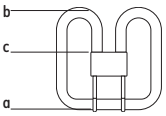

10-watt, 16-watt and 28-watt 2D® lamps may be operated in any position. 21-watt, 38-watt, 39-watt and 55-watt 2D® lamps must be used with the leg marked (a) in the diagram below the bend (b), in order to avoid overheating the end of the cap marked (c).

4 Life ratings for the F18BX preheat lamps are based on operating the lamp at 3 hrs. per start on a preheat type circuit. Operation on rapid start and instant start ballasts is not recommended.

5 Cold cathode resistance is approximately 6.0 Ohms.

6 4-Pin lamp minimum starting temperature is a function of the ballast. Most ballasts are rated with a minimum starting temperature of 50°F (10°C). Ballasts are also available that provide reliable starting to 0°F (-18°C) and -20°F (-29°C).

7 Most one-piece self-ballasted lamps for incandescent sockets and plug-in lamps with screw-in adapters do not work with clip-on shades.

8 Lumens on one-piece self-ballasted lamp systems are measured base up.

9 Best performance if operated base up and at 77°F (25°C) ambient temperature.

10 Use only on 120V, 60Hz circuits. Do not use on dimming circuits, photocells or timers. Do not use in wet locations.

11 Adapters rated at 40,000 hours life.

12 Amalgam products experience stable brightness over a wider temperature range and in various operating positions.

13 Life ratings are based on operating the lamp at 3 hrs. per start on a rapid start type ballast. Life rating on a preheat or instant start ballast is 25% lower.

14 Use only on 120V, 60Hz circuits. Do not use on with photocells or timers. Do not use in wet locations.

15 These lamps are only recommended for use with single-lamp ballasts or parallel-wired 2-lamp ballasts.

16 UL Listed for wet locations. Use only on 120V, 60Hz circuits. Do not use on dimming circuits, photocells or timers.

17 Max. bulb wall temperature not to exceed 180°C. Consult GE sales representative for further information.

18 Life ratings are based on operating the lamp on a high frequency electronic rapid start type ballast.

19 This product complies with Part 18 of the FCC Rules, but may cause interference to radios, televisions, wireless telephones, and remote controls. Avoid placing this product near these devices. If interference occurs, move the product away from the device or plug either into a different outlet. Do not install this product near maritime safety equipment or other critical navigation or communication equipment operating between 0.45 - 30 MHz. Not intended for use with emergency exit fixtures or lights.

Use only on 120V 60 Hz circuits.

When using CFL with motion sensor, preset "on" time on the device as long as possible to avoid frequent switching. (Otherwise lamp life will be decreased significantly)

20 Not intended for use with dimmers. Some electronic timer and photosensor devices contain dimming circuitry, so before using them, check with its manufacturer to ensure compatibility with CFL bulbs.

21 RISK OF ELECTRICK SHOCK
DO NOT USE WHERE DIRECTLY EXPOSED TO WATER
Do not open - no user serviceable parts inside

22 Lamp may shatter and cause injury if broken
Remove and install by grasping only plastic portion of the lamp

23 SUITABLE FOR WET LOCATION

24 SUITABLE FOR USE IN ENCLOSED LUMINAIRES

25 NOT FOR USE IN ENCLOSED FIXTURE

Caution Notices

151

⚠ **CAUTION**

Lamp may shatter and cause injury if broken

- Remove and install by grasping only plastic portion of the lamp

GE2000-0948

⚠ **CAUTION**

Risk of electric shock

- Do not use where directly exposed to water
- Do not open—no user serviceable parts inside

Lamp may shatter and cause injury if broken

- Remove and install by grasping only plastic portion of the lamp

This product complies with Part 18 of the FCC Rules, but may cause interference to radios, televisions, wireless telephones, and remote controls. Avoid placing this product near these devices. If interference occurs, move the product away from the device or plug either into a different outlet. Do not install this product near maritime safety equipment or other critical navigation or communication equipment operating between 0.45-30 MHz. Not intended for use with emergency exit fixture or lights, electronic timers, photocells, or with dimmers

GE2000-0950

⚠ **CAUTION**

Risk of electric shock

- Do not use where directly exposed to water
- Do not open—no user serviceable parts inside

Lamp may shatter and cause injury if broken

- Remove and install by grasping only plastic portion of the lamp

This product complies with Part 18 of the FCC Rules, but may cause interference to radios, televisions, wireless telephones, and remote controls. Avoid placing this product near these devices. If interference occurs, move the product away from the device or plug either into a different outlet. Do not install this product near maritime safety equipment or other critical navigation or communication equipment operating between 0.45 - 30 MHz. Not intended for use with emergency exit fixtures or lights, or with dimmers. Not for use in enclosed fixtures.

GE2000-0951

⚠ **CAUTION**

Risk of electric shock

- Do not use where directly exposed to water
- Do not open—no user serviceable parts inside

Lamp may shatter and cause injury if broken

- Remove and install by grasping only plastic portion of the lamp

This product complies with Part 18 of the FCC Rules, but may cause interference to radios, televisions, wireless telephones, and remote controls. Avoid placing this product near these devices. If interference occurs, move the product away from the device or plug either into a different outlet. Do not install this product near maritime safety equipment or other critical navigation or communication equipment operating between 0.45 - 30 MHz. Not intended for use with emergency exit fixtures or lights, or with dimmers. Not for use in enclosed fixtures.

Caution Notices (continued)

GE2000-2709

⚠ CAUTION

Risk of electric shock

- Do not use where directly exposed to water
- Do not open - no user serviceable parts inside

Lamp may shatter and cause injury if broken

- Remove and install by grasping only plastic portion of the lamp

This product complies with Part 18 of the FCC Rules, but may cause interference to radios, televisions, wireless telephones, and remote controls. Avoid placing this product near these devices. If interference occurs, move the product away from the device or plug either into a different outlet. Do not install this product near maritime safety equipment or other critical navigation or communication equipment operating between 0.45 - 30 MHz. Not intended for use with emergency exit fixtures or lights, or with dimmers. Not for use in enclosed fixtures.

GE2000-2946

⚠ CAUTION

Risk of electric shock

- Do not open—no user serviceable parts inside
- Do not use where directly exposed to water or outdoors without an enclosed fixture

This product complies with Part 18 of the FCC Rules, but may cause interference to radios, televisions, wireless telephones, and remote controls. Avoid placing this product near these devices. If interference occurs, move the product away from the device or plug either into a different outlet. Do not install this product near maritime safety equipment or other critical navigation or communication equipment operating between 0.45-30 MHz. Not intended for use with emergency exit fixtures or lights, electronic timers, photocells, or with dimmers.

GE2010-3449

⚠ CAUTION

Risk of electric shock

- Do not use where directly exposed to water
- Do not open—no user serviceable parts inside
- Use indoors only

Lamp may shatter and cause injury if broken

- Remove and install by grasping only plastic portion of the lamp

This product complies with Part 18 of the FCC Rules, but may cause interference to radios, televisions, wireless telephones, and remote controls. Avoid placing this product near these devices. If interference occurs, move the product away from the device or plug either into a different outlet. Do not install this product near maritime safety equipment or other critical navigation or communication equipment operating between 0.45-30 MHz. Not intended for use with emergency exit fixtures or lights, in totally enclosed recessed fixtures, or with dimmers. Added weight may cause instability of free-standing portable lamps. Use only with portable lamps in which the distance from the bottom of the base to the top of the lamp holder does not exceed three times the base width. Use only with portable lamps which are provided with lamp shades.

GE2010-9353

⚠ CAUTION

Risk of electric shock

- Do not use where directly exposed to water
- Do not open - no user serviceable parts inside

Lamp may shatter and cause injury if broken

- Remove and install by grasping only plastic portion of the lamp

This product complies with Part 18 of the FCC Rules, but may cause interference to radios, televisions, wireless telephones, and remote controls. Avoid placing this product near these devices. If interference occurs, move the product away from the device or plug either into a different outlet. Do not install this product near maritime safety equipment or other critical navigation or communication equipment operating between 0.45 - 30 MHz. Not intended for use with emergency exit fixtures or lights, or with dimmers. Not for use in enclosed fixtures.

GE2023-6025

⚠ CAUTION

Risk of electric shock

- Do not use where directly exposed to water
- Do not open - no user serviceable parts inside

This product complies with Part 18 of the FCC Rules, but may cause interference to radios, televisions, wireless telephones, and remote controls. Avoid placing this product near these devices. If interference occurs, move the product away from the device or plug either into a different outlet. Do not install this product near maritime safety equipment or other critical navigation or communication equipment operating between 0.45 - 30 MHz. Not intended for use with emergency exit fixtures or lights, or with dimmers. Not for use in enclosed fixtures.

GE2024-7455

⚠ CAUTION

Risk of electric shock

- Do not use where directly exposed to water
- Do not open - no user serviceable parts inside

This product complies with Part 18 of the FCC Rules, but may cause interference to radios, televisions, wireless telephones, and remote controls. Avoid placing this product near these devices. If interference occurs, move the product away from the device or plug either into a different outlet. Do not install this product near maritime safety equipment or other critical navigation or communication equipment operating between 0.45 - 30 MHz. Not intended for use with emergency exit fixtures or lights, or with dimmers.

GE2024-7456

⚠ CAUTION

Risk of electric shock

- Do not open—no user serviceable parts inside
- Do not use where directly exposed to water or outdoors without an enclosed fixture

This product complies with Part 18 of the FCC Rules, but may cause interference to radios, televisions, wireless telephones, and remote controls. Avoid placing this product near these devices. If interference occurs, move the product away from the device or plug either into a different outlet. Do not install this product near maritime safety equipment or other critical navigation or communication equipment operating between 0.45-30 MHz. Not intended for use with emergency exit fixtures or lights, electronic timers, photocells, dimmers, or in totally enclosed recessed fixtures.

GE2025-1509

⚠ CAUTION

Risk of electric shock

- Do not use where directly exposed to water
- Do not open - no user serviceable parts inside

This product complies with Part 18 of the FCC Rules, but may cause interference to radios, televisions, wireless telephones, and remote controls. Avoid placing this product near these devices. If interference occurs, move the product away from the device or plug either into a different outlet. Do not install this product near maritime safety equipment or other critical navigation or communication equipment operating between 0.45 - 30 MHz. Not intended for use with emergency exit fixtures or lights. Performance ratings are based on base up orientation.

Do not operate this product in ambient temperatures exceeding xx°C

Cross-Reference

GE Description	GE Product Code	Generic Description	Osram/Sylvania Description	Philips Description
Order This GE Lamp		If you currently use these lamps		
Low Wattage Biax® 2-Pin				
F5BX/827/ECO	97551	CFT5W/G23/827	CF5DS/827/ECO	PL-S 5W/827/2P/Alto
F5BX/841/ECO	97553	CFT5W/G23/841	CF5DS/841/ECO	PL-S 5W/841/2P/Alto
F7BX/827/ECO	97554	CFT7W/G23/827	CF7DS/827/ECO	PL-S 7W/827/2P/Alto
F7BX/835/ECO	97556	CFT7W/G23/835	CF7DS/835/ECO	PL-S 7W/835/2P/Alto
F7BX/841/ECO	97557	CFT7W/G23/841	CF7DS/841/ECO	PL-S 7W/841/2P/Alto
F9BX/827/ECO	97558	CFT9W/G23/827	CF9DS/827/ECO	PL-S 9W/827/2P/Alto
F9BX/835/ECO	97560	CFT9W/G23/835	CF9DS/835/ECO	PL-S 9W/835/2P/Alto
F9BX/841/ECO	97561	CFT9W/G23/841	CF9DS/841/ECO	PL-S 9W/841/2P/Alto
F13BX/827/ECO	97573	CFT13W/GX23/827	CF13DS/827/ECO	PL-S 13W/827/2P/Alto
F13BX/830/ECO	97574	CFT13W/GX23/830	CF13DS/830/ECO	PL-S 13W/830/2P/Alto
F13BX/835/ECO	97569	CFT13W/GX23/835	CF13DS/835/ECO	PL-S 13W/835/2P/Alto
F13BX/841/ECO	97571	CFT13W/GX23/841	CF13DS/841/ECO	PL-S 13W/841/2P/Alto
F13BX/850/ECO	97572	CFT13W/GX23/850	CF13DS/850/ECO	PL-S 13W/850/2P/Alto
F13BX/E/830/ECO	97563	CFT13W/GX23/830	CFT13WDS/EC/830/ECO	–
High Lumen Biax® 4-Pin				
F18BX/SPX30	16649	FT18W/2G11/830	FT18DL/830	PL-L 18W/830
F18BX/SPX35	16053	FT18W/2G11/835	FT18DL/835	PL-L 18W/835
F18BX/SPX41	16940	FT18W/2G11/841	FT18DL/841	PL-L 18W/841
F18BX/SPX30/RS	17174	FT18W/2G11/RS/830	FT18DL/830/RS	–
F18BX/SPX35/RS	17175	FT18W/2G11/RS/835	FT18DL/835/RS	–
F18BX/SPX65/RS	12521	FT18W/2G11/RS/865	–	–
F27BX/SPX30/RS	16944	FT24W/2G11/830	FT24DL/830	PL-L 24W/830
F27BX/SPX35/RS	16948	FT24W/2G11/835	FT24DL/835	PL-L 24W/835
F27BX/SPX41/RS	16951	FT24W/2G11/841	FT24DL/841	PL-L 24W/841
F39BX/SPX30/RS	16538	FT36W/2G11/830	FT36DL/830	PL-L 36W/830
F39BX/SPX35/RS	15867	FT36W/2G11/835	FT36DL/835	PL-L 36W/835
F39BX/SPX41/RS	16952	FT36W/2G11/841	FT36DL/841	PL-L 36W/841
F40/25/BX830/IS/WM	75399	FT40W/2G11/IS/830	F40DL/28W/830/SS/ IS/ECO	PL-L 40W/830/XEW/4P/ IS 25W
F40/25/BX835/IS/WM	75400	FT40W/2G11/IS/835	F40DL/28W/835/SS/ IS/ECO	PL-L 40W/835/XEW/4P/ IS 25W
F40/25/BX841/IS/WM	75401	FT40W/2G11/IS/841	F40DL/28W/841/SS/ IS/ECO	PL-L 40W/841/XEW/4P/ IS 25W
F40/25/BX850/IS/WM	75402	FT40W/2G11/IS/850	–	–
F40/30BX/SPX30	16953	FT40W/2G11/RS/830	FT40DL/830/RS	PL-L 40W/830/RS/IS
F40/30BX/SPX35	16648	FT40W/2G11/RS/835	FT40DL/835/RS	PL-L 40W/835/RS/IS
F40/30BX/SPX41	16954	FT40W/2G11/RS/841	FT40DL/841/RS	PL-L 40W/841/RS/IS
F40/30BX/SPX50/RS	10490	FT40W/2G11/RS/850	FT40DL/850/RS	–
F50BXSPX30RS	20898	FT50W/2G11/RS/830	–	PL-L 50W/830/RS
F50BXSPX35RS	20899	FT50W/2G11/RS/835	–	PL-L 50W/835/RS
F50BXSPX41RS	20900	FT50W/2G11/RS/841	–	PL-L 50W/841/RS
F55BX/830	31951	FT55W/2G11/RS/830	FT55DL/830	–
F55BX/835	31952	FT55W/2G11/RS/835	FT55DL/835	–
F55BX/841	31953	FT55W/2G11/RS/841	FT55DL/841	–
Double Biax® 2-Pin				
F9DBX23/827/ECO	97576	CFQ9W/G23/827	CF9DD/827	–
F9DBX23/841/ECO	97575	CFQ9W/G23/841	–	–
F13DBX23/827/ECO	97586	CFQ13W/GX23/827	CF13DD/827	PL-C 13W/827/USA/Alto
F13DBX23/830/ECO	97587	CFQ13W/GX23/830	CF13DD/830	PL-C 13W/830/USA/Alto
F13DBX23/835/ECO	97588	CFQ13W/GX23/835	CF13DD/835	PL-C 13W/835/USA/Alto
F13DBX23/841/ECO	97589	CFQ13W/GX23/841	CF13DD/841	PL-C 13W/841/USA/Alto
F13DBX/827/ECO	97590	CFQ13W/G24d/827	–	PL-C 13W/827/Alto
F13DBX/830/ECO	97591	CFQ13W/G24d/830	–	PL-C 13W/830/Alto
F13DBX/835/ECO	97592	CFQ13W/G24d/835	–	–
F13DBX/841/ECO	97593	CFQ13W/G24d/841	–	–
F18DBX/827/ECO	97577	CFQ18W/G24d/827	CF18DD/827	PL-C 18W/827/Alto
F18DBX/830/ECO	97578	CFQ18W/G24d/830	CF18DD/830	PL-C 18W/830/Alto
F18DBX/835/ECO	97579	CFQ18W/G24d/835	CF18DD/835	PL-C 18W/835/Alto
F18DBX/841/ECO	97580	CFQ18W/G24d/841	CF18DD/841	PL-C 18W/841/Alto
F26DBX/827/ECO	97606	CFQ26W/G24d/827	CF26DD/827	PL-C 26W/827/Alto

GE Description	GE Product Code	Generic Description	Osram/Sylvania Description	Philips Description
Order This GE Lamp		If you currently use these lamps		
Double Biax® 2-Pin (continued)				
F26DBX/830/ECO	97607	CFQ26W/G24d/830	CF26DD/830	PL-C 26W/830/Alto
F26DBX/835/ECO	97608	CFQ26W/G24d/835	CF26DD/835	PL-C 26W/835/Alto
F26DBX/841/ECO	97609	CFQ26W/G24d/841	CF26DD/841	PL-C 26W/841/Alto
F26DBX/E/827/ECO	97602	CFQ26W/G24d/827	–	–
F26DBX/E/835/ECO	97604	CFQ26W/G24d/835	–	–
Double Biax® 4-Pin				
F13DBX/827/ECO4P	97594	CFQ13W/G24q/827	CF13DD/E/827	PL-C 13W/827/4P/Alto
F13DBX/830/ECO4P	97595	CFQ13W/G24q/830	CF13DD/E/830	PL-C 13W/830/4P/Alto
F13DBX/835/ECO4P	97596	CFQ13W/G24q/835	CF13DD/E/835	PL-C 13W/835/4P/Alto
F13DBX/841/ECO4P	97597	CFQ13W/G24q/841	CF13DD/E/841	PL-C 13W/841/4P/Alto
F18DBX/827/ECO4P	97598	CFQ18W/G24q/827	CF18DD/E/827	PL-C 18W/827/4P/Alto
F18DBX/830/ECO4P	97599	CFQ18W/G24q/830	CF18DD/E/830	PL-C 18W/830/4P/Alto
F18DBX/835/ECO4P	97600	CFQ18W/G24q/835	CF18DD/E/835	PL-C 18W/835/4P/Alto
F18DBX/841/ECO4P	97601	CFQ18W/G24q/841	CF18DD/E/841	PL-C 18W/841/4P/Alto
F26DBX/827/ECO4P	97610	CFQ26W/G24q/827	CF26DD/E/827	PL-C 26W/827/4P/Alto
F26DBX/830/ECO4P	97611	CFQ26W/G24q/830	CF26DD/E/830	PL-C 26W/830/4P/Alto
F26DBX/835/ECO4P	97612	CFQ26W/G24q/835	CF26DD/E/835	PL-C 26W/835/4P/Alto
F26DBX/841/ECO4P	97613	CFQ26W/G24q/841	CF26DD/E/841	PL-C 26W/841/4P/Alto
Triple Biax® 4-Pin				
F13TBX827/4P/ECO	97623	CFTR13W/GX24q/827	CF13DT/E/827	PL-T 13W/827/X/4P/Alto
F13TBX/827/A/ECO	97519	CFTR13W/GX24q/827	–	–
F13TBX/830/A/ECO	97620	CFTR13W/GX24q/830	–	–
F13TBX/835/A/ECO	97621	CFTR13W/GX24q/835	–	–
F13TBX/841/A/ECO	97622	CFTR13W/GX24q/841	–	–
F18TBX827/4P/ECO	97628	CFTR18W/GX24q/827	CF18DT/E/827	PL-T 18W/827/X/4P/Alto
F18TBX/827/A/ECO	97624	CFTR18W/GX24q/827	CF18DT/E/IN/827	PL-T 18W/827/4P/Alto
F18TBX/830/A/ECO	97625	CFTR18W/GX24q/830	CF18DT/E/IN/830	PL-T 18W/830/4P/Alto
F18TBX/835/A/ECO	97626	CFTR18W/GX24q/835	CF18DT/E/IN/835	PL-T 18W/835/4P/Alto
F18TBX/841/A/ECO	97627	CFTR18W/GX24q/841	CF18DT/E/IN/841	PL-T 18W/841/4P/Alto
F26TBX827/4P/ECO	97618	CFTR26W/GX24q/827	CF26DT/E/827	PL-T 26W/827/X/4P/Alto
F26TBX/827/A/ECO	97614	CFTR26W/GX24q/827	CF26DT/E/IN/827	PL-T 26W/827/4P/Alto
F26TBX/830/A/ECO	97615	CFTR26W/GX24q/830	CF26DT/E/IN/830	PL-T 26W/830/4P/Alto
F26TBX/835/A/ECO	97616	CFTR26W/GX24q/835	CF26DT/E/IN/835	PL-T 26W/835/4P/Alto
F26TBX/841/A/ECO	97617	CFTR26W/GX24q/841	CF26DT/E/IN/841	PL-T 26W/841/4P/Alto
F32TBX/827/A/ECO	97629	CFTR32W/GX24q/827	CF32DT/E/IN/827	PL-T 32W/827/4P/Alto
F32TBX/830/A/ECO	97630	CFTR32W/GX24q/830	CF32DT/E/IN/830	PL-T 32W/830/4P/Alto
F32TBX/835/A/ECO	97631	CFTR32W/GX24q/835	CF32DT/E/IN/835	PL-T 32W/835/4P/Alto
F32TBX/841/A/ECO	97632	CFTR32W/GX24q/841	CF32DT/E/IN/841	PL-T 32W/841/4P/Alto
F42TBX/827/A/ECO	97633	CFTR42W/GX24q/827	CF42DT/E/IN/827	PL-T 42W/827/4P/Alto
F42TBX/830/A/ECO	97634	CFTR42W/GX24q/830	CF42DT/E/IN/830	PL-T 42W/830/4P/Alto
F42TBX/835/A/ECO	97635	CFTR42W/GX24q/835	CF42DT/E/IN/835	PL-T 42W/835/4P/Alto
F42TBX/841/A/ECO	97636	CFTR42W/GX24q/841	CF42DT/E/IN/841	PL-T 42W/841/4P/Alto
High Output Biax® 4-Pin				
F57QBX827A4P/EOL	48861	CFM57W/GX24q/827	CF57DT/E/IN/827	–
F57QBX835A4P/EOL	48863	CFM57W/GX24q/835	CF57DT/E/IN/835	PL-T 57W/835/4P/A
F57QBX841A4P/EOL	48864	CFM57W/GX24q/841	CF57DT/E/IN/841	PL-T 57W/841/4P/A
F57QBX850A4P/EOL	93404	CFM57W/GX24q/850	–	–
F70QBX827A4P/EOL	48865	CFM70W/GX24q/827	–	–
F70QBX830A4P/EOL	48866	CFM70W/GX24q/830	–	–
F70QBX835A4P/EOL	48867	CFM70W/GX24q/835	–	–
F70QBX841A4P/EOL	48868	CFM70W/GX24q/841	–	–
F70QBX850A4P/EOL	93406	CFM70W/GX24q/850	–	–

GE Enhanced Plug-in Product Conversion

PC	PC Description	New PC	New Description
If you used to order GE product:		Now order GE product:	
37654	F5BX/SPX27/827	97551	F5BX/827/ECO
37661	F5BX/SPX41/840	97553	F5BX/841/ECO
37846	F7BX/SPX27/827	97554	F7BX/827/ECO
37659	F7BX/SPX35/835	97556	F7BX/835/ECO
37660	F7BX/SPX41/840	97557	F7BX/841/ECO
37651	F9BX/SPX27/827	97558	F9BX/827/ECO
37652	F9BX/SPX35/835	97560	F9BX/835/ECO
37653	F9BX/SPX41/840	97561	F9BX/841/ECO
41645	F13BX/E/827	97562	F13BX/E/827/ECO
41646	F13BX/E/830	97563	F13BX/E/830/ECO
17048	F13BX/SPX35/835	97569	F13BX/835/ECO
20434	F13BX/SPX41/840	97571	F13BX/841/ECO
11671	F13BX/SPX50	97572	F13BX/850/ECO
14650	F13BXSPX27/827	97573	F13BX/827/ECO
17612	F13BXSPX30/830	97574	F13BX/830/ECO
42065	F9DBX23T4/841	97575	F9DBX23/841/ECO
12409	F9DBX23T4SPX27/8	97576	F9DBX23/827/ECO
18844	F13DBX23T4/SPX27	97586	F13DBX23/827/ECO
10574	F13DBX23T4/SPX30	97587	F13DBX23/830/ECO
18556	F13DBX23T4/SPX35	97588	F13DBX23/835/ECO
20531	F13DBX23T4/SPX41	97589	F13DBX23/841/ECO
18557	F13DBXT4/SPX27	97590	F13DBX/827/ECO
12956	F13DBXT4/SPX30	97591	F13DBX/830/ECO
18559	F13DBXT4/SPX35	97592	F13DBX/835/ECO
20532	F13DBXT4/SPX41	97593	F13DBX/841/ECO
30035	F13DBX/SPX27/4P	97594	F13DBX/827/ECO4P
10580	F13DBX/SPX30/4P	97595	F13DBX/830/ECO4P
30037	F13DBX/SPX35/4P	97596	F13DBX/835/ECO4P
30038	F13DBX/SPX41/4P	97597	F13DBX/841/ECO4P
12860	F18DBXT4/SPX27	97577	F18DBX/827/ECO
12861	F18DBXT4/SPX30	97578	F18DBX/830/ECO
12863	F18DBXT4/SPX35	97579	F18DBX/835/ECO
12864	F18DBXT4/SPX41	97580	F18DBX/841/ECO
12865	F18DBX/SPX27/4P	97598	F18DBX/827/ECO4P
12866	F18DBX/SPX30/4P	97599	F18DBX/830/ECO4P
12869	F18DBX/SPX35/4P	97600	F18DBX/835/ECO4P
12870	F18DBX/SPX41/4P	97601	F18DBX/841/ECO4P
46290	F26DBX/E/827	97602	F26DBX/E/827/ECO
46292	F26DBX/E/835	97604	F26DBX/E/835/ECO
35250	F26DBXT4/SPX27	97606	F26DBX/827/ECO
35237	F26DBXT4/SPX30	97607	F26DBX/830/ECO
35251	F26DBXT4/SPX35	97608	F26DBX/835/ECO
35252	F26DBXT4/SPX41	97609	F26DBX/841/ECO
35247	F26DBXT4SPX27/4P	97610	F26DBX/827/ECO4P
35235	F26DBXT4SPX30/4P	97611	F26DBX/830/ECO4P
35248	F26DBXT4SPX35/4P	97612	F26DBX/835/ECO4P
35236	F26DBXT4SPX41/4P	97613	F26DBX/841/ECO4P
34391	F13TBX/SPX27/A/4	97619	F13TBX/827/A/ECO
34395	F13TBX/SPX30/A/4	97620	F13TBX/830/A/ECO
34400	F13TBX/SPX35/A/4	97621	F13TBX/835/A/ECO
34387	F13TBX/SPX41/A/4	97622	F13TBX/841/A/ECO
47696	F13TBX827/4P/EOL	97623	F13TBX827/4P/ECO
34392	F18TBX/SPX27/A/4	97624	F18TBX/827/A/ECO
34396	F18TBX/SPX30/A/4	97625	F18TBX/830/A/ECO
34405	F18TBX/SPX35/A/4	97626	F18TBX/835/A/ECO
34385	F18TBX/SPX41/A/4	97627	F18TBX/841/A/ECO
48869	F18TBX827/4P/EOL	97628	F18TBX827/4P/ECO
34393	F26TBX/SPX27/A/4	97614	F26TBX/827/A/ECO
34397	F26TBX/SPX30/A/4	97615	F26TBX/830/A/ECO
34406	F26TBX/SPX35/A/4	97616	F26TBX/835/A/ECO
34381	F26TBX/SPX41/A/4	97617	F26TBX/841/A/ECO
48870	F26TBX827/4P/EOL	97618	F26TBX827/4P/ECO
39377	F32TBX/SPX27A/4P	97629	F32TBX/827/A/ECO

PC	PC Description	New PC	New Description
If you used to order GE product:		Now order GE product:	
39378	F32TBX/SPX30A/4P	97630	F32TBX/830/A/ECO
39379	F32TBX/SPX35A/4P	97631	F32TBX/835/A/ECO
39380	F32TBX/SPX41A/4P	97632	F32TBX/841/A/ECO
46312	F42TBX827A4P/EOL	97633	F42TBX/827/A/ECO
46313	F42TBX830A4P/EOL	97634	F42TBX/830/A/ECO
46314	F42TBX835A4P/EOL	97635	F42TBX/835/A/ECO
46315	F42TBX841A4P/EOL	97636	F42TBX/841/A/ECO
48861	F57QBX/827/A/4P/EOL	48861	F57QBX/827/A/ECO
48862	F57QBX/830/A/4P/EOL	48862	F57QBX/830/A/ECO
48863	F57QBX/835/A/4P/EOL	48863	F57QBX/835/A/ECO
48864	F57QBX/841/A/4P/EOL	48864	F57QBX/841/A/ECO
93404	F57QBX/850/A/4P/EOL	93404	F57QBX/850/A/ECO
48865	F70QBX/827/A/4P/EOL	48865	F70QBX/827/A/ECO
48866	F70QBX/830/A/4P/EOL	48866	F70QBX/830/A/ECO
48867	F70QBX/835/A/4P/EOL	48867	F70QBX/835/A/ECO
48868	F70QBX/841/A/4P/EOL	48868	F70QBX/841/A/ECO
93406	F70QBX/850/A/4P/EOL	93406	F70QBX/850/A/ECO

LED Lamps, Tubes and Modules

LED Lamps, Tubes and Modules

Introduction

A GE scientist invented the first visible LED in 1962, pioneering a technology that is revolutionizing the lighting industry. GE is also one of the largest LED systems companies in the world. But it's not only about size. We're dedicated to LED performance on your behalf. That's why we are helping to develop a universal set of performance measures so you can make an informed decision.

Product Information

LED Lamps and Tubes

Quality

The first time you turn on GE LED replacement lamps, you'll be amazed by the color, distribution, output and uniformity. The proof is in your "before and after" environment. In addition, every LED system comes with a product life rating that recognizes acceptable light output for its intended application, ensuring that you won't be left in the dark.

Long Life

GE's LED replacement lamps are sturdy, dependable and long lasting. Depending on the lamp, you can expect up to 50,000 hours of rated life. That's 12 hours a day, every day of the year, for over a decade.

Innovation

We continually invest in new products and are often the first to market with the latest upgrades, including light sources, luminaires and controls for a system that's both efficient and effective.

ENERGY STAR®

In addition to energy savings, ENERGY STAR® qualified LED lamps can further reduce the overall cost of ownership through lamp rebate incentives. Good news for you is that GE has the most ENERGY STAR® rated LEDs. According to ENERGY STAR® guidelines, the benefits of an ENERGY STAR® qualified LED lamp include:

- Uses about 75% less energy than a traditional incandescent lamp
- Lasts at least 6 times longer than an incandescent lamp
- Turns on instantly—there's no warm up time

Total System Solutions

Anyone can install a lamp. What we implement are lighting strategies and solutions. Our products are designed to benefit you from an overall performance perspective.

Proven Track Record

We've been here. We'll be here. Built into each of GE's LED replacement lamps is 125 years of experience, reliability and innovation. Every performance claim we make is supported by stringent, comprehensive testing —ensuring that your lighting investment pays off today and in the future.

Trusted Advisor

From the start, we provide a comprehensive lighting audit of existing systems, provide photometric analysis with 3D renderings of the new system, and forecast energy and maintenance savings. We also search out opportunities for improvement you may not have considered.

Short Payback Period

Decreased energy and maintenance costs, combined with utility rebates, deliver results that often exceed your expectations.

Family of Solutions

Directional. Omni-directional. Decorative. Dimming. Tight optical control. Accent. Task. Display. Indoor. Outdoor. You name it—we've got it in LED.

Infusion™ LED Module

GE Infusion™ is a game-changing technology and one of the most flexible LED lighting solutions on the market. As a designer, OEM, or end-users, you can choose from an extensive selection of modules. Plus, there's the assurance of GE reliability and performance.

- Built for the Future: If lighting needs change or LED technology advances, there is no need to buy new fixtures. Simply twist in the latest GE Infusion™ LED Module.
- Environmentally Conscious: The Infusion™ LED Module can use fewer materials than integral LED fixtures because only the module is replaced at the end of lamp life—not the entire light fixture.
- Customizable: Select the module with the light level or color quality that meets your needs. The Infusion™ LED Module dims using a variety of dimming protocols including 0-10V, Phase and DALI.
- Compatible: Ideal for fixture manufacturers designing for track, recessed, pendant or other types of luminaires around one compatible solution—no need for multiple base designs.

Bulb Shape	Base Type	Watts	Order Code	Description	Volts	Case Qty	MOL (in)	Lumens Initial	CBCP	Initial Color Temp	CRI	†Wattage Equivalency	*Rated Life – Hours L70	Dimmable	††ENERGY STAR®	‡Location Rating	Additional Information
LED Decorative Lamps																	
LED Candles (1.8W candles are 10-watt incandescent replacements – based on ENERGY STAR® requirements for lumens)																	
CA11	Med	3.5	68168	LED3DCAM-C/TP	120	3	4.2	170		2700	80	25W	15,000	▲		Damp	Clear, Bent Tip
		4	21250	LED4DCAM-C3/827	120	6	4.2	300		2700	80	40W	15,000	▲	★	Damp	Clear, Bent Tip
		4	75554	LED4DCAMCF/824	120	6	4.2	250		2400	76	25W	15,000	▲		Damp	Clear, Bent Tip
		4.5	68167	LED4DCAM-F/TP	120	3	4.2	270		2700	82	25W	15,000	▲		Damp	Frost, Blunt Tip
		7	21251	LED7DCAM-C3/827	120	6	4.8	500		2700	80	60W	15,000	▲	★	Damp	Clear, Bent Tip
	E16	4	69111	LED4DCAM-C3/850	120	6	4.2	300		5000	80	40W	15,000	▲		Damp	Clear, Bent Tip
	Cand	3.5	68166	LED3DCAC-C/TP	120	3	4.3	170		2700	80	25W	15,000	▲		Damp	Clear, Bent Tip
		4	21231	LED4DCAC-C3/827	120	6	4.3	300		2700	80	40W	15,000	▲	★	Damp	Clear, Bent Tip
		4	69109	LED4DCAC-C3/850	120	6	4.3	300		2700	80	40W	15,000	▲		Damp	Clear, Bent Tip
		4	75553	LED4DCACCF/824	120	6	4.3	250		2400	76	25W	15,000	▲		Damp	Clear, Bent Tip
		4.5	68165	LED4DCAC-F/TP	120	3	4.3	270		2700	82	25W	15,000	▲		Damp	Frost, Bent Tip
		7	21233	LED7DCAC-C3/827	120	6	4.8	500		2700	80	60W	15,000	▲	★	Damp	Clear, Bent Tip
LED Globes (1.8W candles are 10-watt and 2.3W candles are 15-watt incandescent replacements – based on ENERGY STAR® requirements for lumens)																	
G16.5	Cand	4.5	68169	LED4DG16C-W/TP	120	3	3.0	270		2700	82	25W	15,000	▲		Damp	White
		4.5	68170	LED4DG16C-C/TP	120	3	3.0	270		2700	82	25W	15,000	▲		Damp	Clear
G25	Med	4.5	68171	LED4DG25M-W/TP	120	3	4.3	280		2700	82	25W	15,000	▲		Damp	White
		4.5	68172	LED4DG25M-C/TP	120	3	4.3	280		2700	82	25W	15,000	▲		Damp	Clear
		5	21253	LED5DG25-W3/827	120	6	4.3	350		2700	80	40W	15,000	▲	★	Damp	White
		7	21255	LED7DG25-W3/827	120	6	4.3	500		2700	80	60W	15,000	▲	★	Damp	White
LED Night Lights																	
C7	Cand	0.5	13887	LED0.5C7/C/CD2	120	6	2			2700	80		25,000			Dry	Clear
		0.5	14150	LED0.5C7/W/CD2	120	6	2			2700	80		25,000			Dry	White
LED Filament Lamps																	
CA11	E12	3	75915	LED3DCAC-V	120	6	4.4	300		2500	80	40W	15,000	▲		Damp	Bent Tip, Vintage Filament
	Cand	3	75914	LED3DCAM-V	120	6	4.4	300		2500	80	40W	15,000	▲		Damp	Bent Tip, Vintage Filament
ST19	Med	3	76018	LED3DST19-V	120	6	5	440		2500		25W	15,000	▲		Damp	Vintage Filament
		5	33025	LED5DST19-V-OT2P	120	8	5	440		2500		40W	15,000	▲		Damp	4, 2-packs, Vintage Filament
LED A-Line Lamps																	
LED A-15																	
A-15	Med	3	92122	LED3A15RED	120	3	3.5			Red			15,000			Damp	Red
		3	92125	LED3A15BLUE	120	3	3.5			Blue			15,000			Damp	Blue
		3	92126	LED3A15GREEN	120	3	3.5			Green			15,000			Damp	Green
		3	92132	LED3A15PINK	120	3	3.5			Pink			15,000			Damp	Pink
		3	23054	LED3A15ORNG	120	3	3.5			Orange			15,000			Damp	Orange
		4	34038	LED4DA15-W3/827	120	6	3.5	300		2700	80	40W	15,000	▲		Damp	White
		4	34051	LED4DA15-C3/827	120	6	3.5	300		2700	80	40W	15,000	▲		Damp	Clear
		4.5	83645	LED4.5DA15C-FRIG	120	3	3.5	350		5000	80	40W	15,000	▲		Damp	Clear Refrigerator Bulb
LED A-19 (The 9W A-19s are 40-watt and the 13W A-19s are 60-watt incandescent replacements – based on ENERGY STAR® requirements for lumens)																	
A-19	Med	6	69115	LED6DA19/827	120	6	4.4	480		2700	80	40W	15,000	▲	★	Damp	White, Omnidirectional, ES 2.0
		6	69118	LED6DA19/830	120	6	4.4	480		3000	80	40W	15,000	▲	★	Damp	White, Omnidirectional, ES 2.0
		6	69132	LED6DA19/840	120	6	4.4	480		4000	80	40W	15,000	▲	★	Damp	White, Omnidirectional, ES 2.0
		6	69144	LED6DA19/850	120	6	4.4	480		5000	80	40W	15,000	▲	★	Damp	White, Omnidirectional, ES 2.0
		7	89944	LED7DAV3/5K/BX	120	4	4.63	500		5000	80	40W	25,000	▲		Damp	White, Semi-Omni
		7	14063	LED7DAV3/827W	120	6	4.63	470		2700	80	40W	25,000	▲		Damp	White, Semi-Omni
		7	34238	LED7DA19/824	120	6	4.44	450		2400	80	40W	25,000	▲		Damp	White
		7	11332	LED7DA19/827	120	6	4.43	450		2700	80	40W	25,000	▲		Damp	White, Omnidirectional
		7	71208	LED7DA19/830	120	6	4.43	450		3000	80	40W	25,000	▲		Damp	White, Omnidirectional
		7	95928	LED7DAV3/5K	120	6	4.63	500		5000	80	40W	25,000	▲		Damp	White, Semi-Omni

* The life rating is based on the hours of operation the lamp will provide before reaching 70% of its original lumen rating (L70).
** Minimum order quantity = 6
† Incandescent or halogen wattage equivalencies based on Energy Star guidelines using lumens or CBPB according to lamp type
†† Energy Star status: Certified as meeting Energy Star guidelines.
‡ UL 1993 Environmental Requirements for LED Lamps.
Location, damp – Exterior or interior location that is normally or periodically subject to condensation of moisture in, on, or adjacent to electrical equipment, and includes partially protected locations.
Location, dry – Location not normally subject to dampness, may include a location subject to temporary dampness, i.e., building under construction, provided ventilation is adequate to prevent an accumulation of moisture.
Location, wet – Location in which water or other liquid can drip, splash, or flow on or against electrical equipment.
Note: Product descriptions ending in "/TP" indicate a carded blister or clamshell package nested in a tray for shelf display. Cards also designed for hook display.

LED Lamps, Tubes and Modules

Bulb Shape	Base Type	Watts	Order Code	Description	Volts	Case Qty	MOL (in)	Lumens Initial	CBCP	Initial Color Temp	CRI	†Wattage Equivalency	*Rated Life – Hours L70	Dimmable	††ENERGY STAR®	‡Location Rating	Additional Information
LED A-Line Lamps (continued)																	
LED A-19 (continued)	**(The 9W A-19s are 40-watt and the 13W A-19s are 60-watt incandescent replacements – based on ENERGY STAR® requirements for lumens)**																
A-19 	Med	10	69117	LED10DA19/827	120	6	4.4	800		2700	80	60W	15,000	▲	★	Damp	White, Omnidirectional, ES 2.0
		10	69119	LED10DA19/830	120	6	4.4	800		3000	80	60W	15,000	▲	★	Damp	White, Omnidirectional, ES 2.0
		10	69133	LED10DA19/840	120	6	4.4	800		4000	80	60W	15,000	▲	★	Damp	White, Omnidirectional, ES 2.0
		10	69146	LED10DA19/850	120	6	4.4	800		5000	80	60W	15,000	▲	★	Damp	White, Omnidirectional, ES 2.0
		10.5	95927	LED11DA19/5K	120	6	4.43	850		5000	80	60W	15,000	▲		Damp	White, Semi-Omni
		10.5	13791	LED11DAV3/827W	120	6	4.63	800		2700	80	60W	15,000	▲		Damp	White, Semi-Omni
		11	29268	LED11DA19/824	120	6	4.44	800		2400	80	60W	25,000	▲		Damp	White, Omnidirectional
		11	11328	LED11DA19/827	120	6	4.43	800		2700	80	60W	25,000	▲		Damp	White, Omnidirectional
		11	71209	LED11DA19/830	120	6	4.43	800		3000	80	60W	25,000	▲		Damp	White, Omnidirectional
	GU24	11	74357	LED11DA19827GU24	120	6	5.43	800		2700	80	60W	25,000	▲		Damp	White, Omnidirectional
LED A-21																	
A-21 	GU24	12	73384	LED12DA21F/830FE	120	6	5.31	1100		3000	80	100W	25,000	▲		Enclosed	White, Enclosed, Omnidi-rectional
		12	73404	LED12DA21/850FE	120	6	5.31	1100		5000	80	100W	25,000	▲		Enclosed	White, Enclosed, Omnidi-rectional
	Med	13	12422	LED13DA212/827	120	6	5.28	1100		2700	80	75W	25,000	▲		Damp	White, Omnidirectional
		14	94936	LED14DA21/827W	120	6	5.28	1100		2700	80	75W	15,000	▲			White, Semi-Omni
		16	12349	LED16DA212/827	120	6	5.28	1600		2700	80	100W	25,000	▲		Damp	White, Omnidirectional
		16	12399	LED16DA212/830	120	6	5.28	1600		3000	80	100W	25,000	▲		Damp	White, Omnidirectional
	GU24	16	92498	LED16DA21827GU24	120	6	5.43	1600		2700	80	100W	25,000	▲		Damp	White, Omnidirectional
	Med	16	92118	LED16A30/100/5KB	120	3	5.31	400/ 1600/ 1050		5000	80	30W/ 70W/ 100W	25,000		★	Damp	White, 3-Way
		16	73376	LED16A30/100/827	120	6	5.31	360/ 1400/ 900		2700	80	30W/ 70W/ 100W	25,000		★	Damp	White, 3-Way
		17	34369	LED17DA21/5K/BX	120	4	5.28	1600		5000	80	100W	15,000	▲		Damp	White, Semi-Omni
		17	16113	LED17DA21/827	120	6	5.28	1600		2700	78	100W	15,000	▲		Damp	White, Semi-Omni
		17	23006	LED17DA221XSW	120	4	5.28	1520		2700	85	100W	15,000	▲		Damp	White, Semi-Omni
		22	73378	LED22A50/150/827	120	6	5.31	700/ 2155/ 1600		2700	80	50W/ 100W/ 150W	25,000			Damp	White, 3-Way
		22	92120	LED22A50/150/5KB	120	3	5.31	700/ 2155/ 1600		5000	80	50W/ 100W/ 150W	25,000			Damp	White, 3-Way
LED Bright Stik																	
	Med	5.5	66256	LED5.5LS3/827	120	48	4.45	450		2700	80	40W	15,000		★	Damp	Case = 16 3-pack, ES 2.0
		5.5	75177	LED5.5LS3/850	120	48	4.45	450		5000	80	40W	15,000		★	Damp	Case = 16 3-pack, ES 2.0
		6	35517	LED6LS3/828	120	48	4.45	450		2850	80	40W	15,000			Indoor	Case = 16 3-pack
		6	35519	LED6LS3/850	120	48	4.45	450		5000	80	40W	15,000			Indoor	Case = 16 3-pack
		9	75184	LED9LS3/827	120	48	4.45	800		2700	80	60W	15,000		★	Damp	Case = 16 3-pack, ES 2.0
		9	75588	LED9LS3/850	120	48	4.45	800		5000	80	60W	15,000		★	Damp	Case = 16 3-pack, ES 2.0
		10	28089	LED10LS3/828	120	48	4.45	760		2850	80	60W	15,000			Indoor	Case = 16 3-pack
		10	32273	LED10LS3/850	120	48	4.45	760		5000	80	60W	15,000			Indoor	Case = 16 3-pack
		14	35520	LED14LS2/828	120	32	5.24	1060		2850	80	75W	15,000			Indoor	Case = 16 2-pack
		14	35522	LED14LS2/850	120	32	5.24	1060		5000	80	75W	15,000			Indoor	Case = 16 2-pack
		16	35523	LED16LS2/828	120	32	5.24	1520		2850	80	100W	15,000			Indoor	Case = 16 2-pack
		16	35524	LED16LS2/850	120	32	5.24	1520		5000	80	100W	15,000			Indoor	Case = 16 2-pack
LED Reflector Lamps																	
LED R20																	
R20 	Med	7	38268	LED7DR20/827	120	6	3.64	470		2700	80		25,000	▲		Damp	White
		7	43233	LED7DR20/830	120	6	3.64	470		3000	80		25,000	▲		Damp	White
		7	38273	LED7DR20/850	120	6	3.64	500		5000	80		25,000	▲		Damp	White

* The life rating is based on the hours of operation the lamp will provide before reaching 70% of its original lumen rating (L70).
** Minimum order quantity = 6
† Incandescent or halogen wattage equivalencies based on Energy Star guidelines using lumens or CBPB according to lamp type
†† Energy Star status: Certified as meeting Energy Star guidelines.
‡ UL 1993 Environmental Requirements for LED Lamps.
Location, damp – Exterior or interior location that is normally or periodically subject to condensation of moisture in, on, or adjacent to electrical equipment, and includes partially protected locations.
Location, dry – Location not normally subject to dampness, may include a location subject to temporary dampness, i.e., building under construction, provided ventilation is adequate to prevent an accumulation of moisture.
Location, wet – Location in which water or other liquid can drip, splash, or flow on or against electrical equipment.
Notes: Product descriptions ending in "/TP" indicate a carded blister or clamshell package nested in a tray for shelf display. Cards also designed for hook display.

For the most up-to-date product information, see www.gelighting.com. To convert inches to millimeters, multiply by 25.4.

Bulb Shape	Base Type	Watts	Order Code	Description	Volts	Case Qty	MOL (in)	Lumens Initial	CBCP	Initial Color Temp	CRI	†Wattage Equivalency	*Rated Life – Hours L70	Dimmable	††ENERGY STAR®	‡Location Rating	Additional Information
LED Reflector Lamps (continued)																	
LED BR30 (The 12W BR30s are 65-watt incandescent replacements – based on ENERGY STAR® requirements for lumens)																	
BR30	Med	10	68160	LED10DR303V/827W	120	6	5.37	700		2700	80	65W	25,000	▲	★	Damp	Frosted, White body
		10	68161	LED10DR303V/830W	120	6	5.37	700		3000	80	65W	25,000	▲	★	Damp	Frosted, White body
		10	43234	LED10DR30V/827W	120	3	5.37	650		2700	80	65W	25,000	▲		Damp	Frosted, White body
		10	43237	LED10DR30V/830W	120	3	5.37	650		3000	80	65W	25,000	▲		Damp	Frosted, White body
		10	43241	LED10DR30V/850W	120	3	5.37	650		5000	80	65W	25,000	▲		Damp	Frosted, White body
		10	69107	LED10DR303/850W	120	6	5.37	700		5000	80	65W	25,000	▲	★	Damp	Frosted, White body
LED BR40																	
BR40	Med	13	20445	LED13BR40/5K/TP	120	3	6.34	1070		5000	80	85W	25,000	▲	★	Damp	Frosted, White body
		13	64176	LED13DBR40/827	120	6	6.34	1070		2700	80	85W	25,000	▲	★	Damp	Frosted, White body
		13	14708	LED13DBR40/830	120	6	6.34	1070		3000	80	85W	25,000	▲	★	Damp	Frosted, White body
LED Directional Lamps (MR16)																	
LED 12 Volt AC/DC MR16 and MRX16 (35-watt Halogen replacements – based on ENERGY STAR® requirements for center beam candlepower)																	
MR16	GU5.3	7	69920	LED7DMR16D830/25	12	6	1.9	390	1900	3000	83	35W	25,000	▲		Damp	Narrow Flood, 25° beam, Silver
		7	93412	LED7DMR16S830/15	12	6	2.3	460	3800	3000	80	35W	25,000	▲		Damp	Spot, 15° beam, Silver
		7	93433	LED7DMR16S840/15	12	6	1.97	490	4200	4000	80	35W	25,000	▲		Damp	Accent, 15° beam, Silver
		7	89947	LED7XDMR16D/TP	12	6	1.88	500	2500	3000	82	50W	25,000	▲		Damp	Accent, 25° beam, Silver
MRX16	GU5.3	7	35529	LED7DMRX15827/15	12	6	2.2	400	3400	2700	80	35W	25,000	▲		Damp	Spot, 15° beam, White
		7	35206	LED7XDMRX1682725	12	6	2.2	500	2350	2700	80	50W	25,000	▲	★	Damp	Narrow Flood, 25° beam, White
		7	35214	LED7XDMRX1682735	12	6	2.2	500	1350	2700	80	50W	25,000	▲	★	Damp	Flood, 35° beam, White
		7	35196	LED7XDMRX1683025	12	6	2.2	500	1350	3000	80	50W	25,000	▲	★	Damp	Flood, 35° beam, White
		7	35195	LED7XDMRX1683025	12	6	2.2	500	2350	3000	80	50W	25,000	▲	★	Damp	Narrow Flood, 25° beam, White
		7	21359	LED7MRX16R930/10	12	6	2.01	350	8000	3000	95	50W	25,000			Damp	Spot, 10° beam, Reveal
MR16	GU5.3	5.5	35540	LED5.5DMR1682735	12	6	1.88	400	1000	2700	80	35W	25,000	▲	★	Damp	Flood, 35° beam, White
		5.5	35535	LED5.5DMR1683035	12	6	1.88	420	1000	3000	80	35W	25,000	▲	★	Damp	Flood, 35° beam, White
		5.5	35542	LED5.5DMR1684035	12	6	1.8	460	1100	4000	80	35W	25,000	▲	★	Damp	Flood, 35° beam, White
		7	35543	LED7XDMR16-28325	12	6	1.8	500	2350	3000	80	50W	25,000	▲	★	Damp	Narrow Flood, 25° beam, White
		7	35544	LED7XDMR16-28335	12	6	1.8	500	1350	3000	80	50W	25,000	▲	★	Damp	Flood 35° beam, White
		7	39542	LED7XDMR16-V2725	12	6	1.88	530	2400	2700	80	50W	25,000	▲		Damp	Narrow Flood, 25° beam, White
		7	39567	LED7XDMR16-V2735	12	6	1.88	530	1400	2700	80	50W	25,000	▲		Damp	Flood, 35° beam, White
LED 120 Volt GU10																	
MR16	GU10	1	73153	LED1GU10/NFL/CD	120	3	2.30	35	100	5500	70		12,000			Damp	Deco Light
		3.5	37114	LED4D/GU1083035	120	6	2.1	250	550	3000	80	35W	25,000	▲	★	Dry	Flood, 35° beam, White
		4	75865	LED4GU10/NFL/TP	120	3	2.30	100	250	3050	82		15,000			Damp	Accent, 25° beam, Silver
		4	89020	LED4D/GU10/NFLTP	120	3	2.1	250	720	3000	80	35W	25,000	▲	★	Damp	Flood, 35° beam, White
		4.5	62909	LED5GU10/NFL/TP	120	3	2.30	200	800	3000	82	35W	25,000			Damp	Accent, 25° beam, Silver
		6	26346	LED6D/GU10/NFL/TP	120	3	2.1	380	1100	3000	80	50W	25,000	▲	★	Damp	Flood, 35° beam, White
LED Directional Lamps (PAR)																	
LED Compact PAR16																	
PAR16	Med	4	26383	LED4D/P16/NFLTP	120	3	2.8	250	720	3000	80	40W	25,000	▲	★	Dry	Flood, 35° beam, White
		6	26384	LED6D/P16/NFLTP	120	3	2.8	380	1100	3000	80	60W	25,000	▲	★	Dry	Flood, 35° beam, White
LED Compact PAR20 (50-watt halogen replacements – based on ENERGY STAR® requirements for center beam candlepower)																	
PAR20	Med	7	92163	LED7DO202NFL-OD	120	3	3.5	500	3600	2700	80	50W	25,000	▲		Wet	Accent, 20° beam, White, in/outdoor
		7	21282	LED7DP202NFL5KOD	120	3	3.5	550	3600	5000	80	50W	25,000	▲		Wet	Accent, 20° beam, White, in/outdoor
		7	93327	LED7DP203B830/20	120	6	3.5	520	3600	3000	80	50W	25,000	▲	★	Damp	Narrow Flood, 20° beam Black
		7	92121	LED7DP203NFL5KTP	120	3	3.5	550	4000	5000	80	70W	25,000	▲	★	Damp	Accent, 20° beam, White
		7	74374	LED7DP203W/NFLTP	120	3	3.5	500	3600	2700	80	70W	25,000	▲	★	Damp	Accent, 20° beam, White
		7	93347	LED7DP203W830/20	120	6	3.5	520	3600	3000	80	50W	25,000	▲	★	Damp	Narrow Flood, 20° beam White

* The life rating is based on the hours of operation the lamp will provide before reaching 70% of its original lumen rating (L70).
** Minimum order quantity = 6
† Incandescent or halogen wattage equivalencies based on Energy Star guidelines using lumens or CBPB according to lamp type
†† Energy Star status: Certified as meeting Energy Star guidelines.
‡ UL 1993 Environmental Requirements for LED Lamps.
Location, damp – Exterior or interior location that is normally or periodically subject to condensation of moisture in, on, or adjacent to electrical equipment, and includes partially protected locations.
Location, dry – Location not normally subject to dampness, may include a location subject to temporary dampness, i.e., building under construction, provided ventilation is adequate to prevent an accumulation of moisture.
Location, wet – Location in which water or other liquid can drip, splash, or flow on or against electrical equipment.
Note: Product descriptions ending in "/TP" indicate a carded blister or clamshell package nested in a tray for shelf display. Cards also designed for hook display.

LED Lamps, Tubes and Modules

Bulb Shape	Base Type	Watts	Order Code	Description	Volts	Case Qty	MOL (in)	Lumens Initial	CBCP	Initial Color Temp	CRI	†Wattage Equivalency	*Rated Life – Hours L70	Dimmable	††ENERGY STAR®	‡Location Rating	Additional Information
LED Directional Lamps (PAR) (continued)																	
LED Compact PAR20 (continued) (50-watt halogen replacements – based on ENERGY STAR® requirements for center beam candlepower)																	
PAR20	Med	7	93348	LED7DP203W830/35	120	6	3.5	520	1200	3000	80	50W	25,000	▲	★	Damp	Flood, 35° beam White
		7	93349	LED7DP203B827/20	120	6	3.5	500	3600	2700	80	50W	25,000	▲	★	Damp	Narrow Flood, 20° beam Black
		7	93354	LED7DP203B827/35	120	6	3.5	500	1150	2700	80	50W	25,000	▲	★	Damp	Flood, 35° beam Black
		7	93360	LED7DP203W827/20	120	6	3.5	500	3600	2700	80	50W	25,000	▲	★	Damp	Narrow Flood, 20° beam White
		7	93362	LED7DP203W827/35	120	6	3.5	500	1150	2700	80	50W	25,000	▲	★	Damp	Flood, 35° beam White
LED Compact PAR30 – Low Glare – Visual Comfort Lens™ (Halogen replacement info below is based on ENERGY STAR® requirements for center beam candlepower)																	
PAR30	Med	12	84374	LED12DP30RW93015	120	6	3.74	860	9400	3000	90	75W	25,000	▲	★	Damp	Spot, 15° beam, White
		12	84379	LED12DP30RW93025	120	6	3.74	900	3900	3000	90	75W	25,000	▲	★	Damp	Narrow Flood, 25° beam, White
		12	84380	LED12DP30RW93040	120	6	3.74	900	1800	3000	90	75W	25,000	▲	★	Damp	Flood, 40° beam, White
		12	84392	LED12DP30RW92725	120	6	3.74	850	3500	2700	90	75W	25,000	▲	★	Damp	Narrow Flood, 25° beam, White
		12	84395	LED12DP30RW92740	120	6	3.74	850	1700	2700	90	75W	25,000	▲	★	Damp	Flood, 40° beam, White
		12	84384	LED12DP30RW83025	120	6	3.74	1050	4800	3000	80	75W	25,000	▲	★	Damp	Narrow Flood, 25° beam, White
		12	42131	LED12DP30RW83040	120	6	3.74	1050	2400	3000	80	75W	25,000	▲	★	Damp	Flood, 40° beam, White
		12	42133	LED12DP30RW82725	120	6	3.74	1000	4700	2700	80	75W	25,000	▲	★	Damp	Narrow Flood, 25° beam, White
		12	42134	LED12DP30RW82740	120	6	3.74	1000	2200	2700	80	75W	25,000	▲	★	Damp	Flood, 40° beam, White
		12	73583	LED12DP30RB82740	120	6	3.74	1000	2200	2700	80	75W	25,000	▲	★	Damp	Flood, 40° beam, Black
LED Compact PAR30 – Long Neck - Low Glare – Visual Comfort Lens™ (Halogen replacement info below is based on ENERGY STAR® requirements for center beam candlepower)																	
PAR30L	Med	12	84399	LED12DP3LRW93025	120	6	4.72	900	3900	3000	90	75W	25,000	▲	★	Damp	Narrow Flood, 25° beam, White
		12	84400	LED12DP3LRW93040	120	6	4.72	900	1800	3000	90	75W	25,000	▲	★	Damp	Flood, 40° beam, White
		12	84407	LED12DP3LRW92740	120	6	4.72	850	1700	2700	90	75W	25,000	▲	★	Damp	Flood, 40° beam, White
		12	42136	LED12DP3LRW83025	120	6	4.72	1050	4800	3000	80	75W	25,000	▲	★	Damp	Narrow Flood, 25° beam, White
		12	42137	LED12DP3LRW83040	120	6	4.72	1050	2400	3000	80	75W	25,000	▲	★	Damp	Flood, 40° beam, White
		12	42141	LED12DP3LRW82725	120	6	4.72	1000	4700	2700	80	75W	25,000	▲	★	Damp	Narrow Flood, 25° beam, White
		12	42144	LED12DP3LRW82740	120	6	4.72	1000	2200	2700	80	75W	25,000	▲	★	Damp	Flood, 40° beam, White
		17	20151	LED17DP30LW93025	120	6	4.8	1100	4600	3000	90	75W	25,000	▲	★	Damp	Spot, 25° beam, White
LED Compact PAR30 (Halogen replacement info below is based on ENERGY STAR® requirements for center beam candlepower)																	
PAR30	Med	12	89988	LED12DP302/FL/TP	120	3	3.66	850	2300	2700	84	75W	25,000	▲		Damp	Accent, 35° beam, White
		12	98755	LED12DP303W83035	120	6	3.66	950	2600	3000	80	75W	25,000	▲	★	Damp	Flood, 35° beam, White, STIR
LED Compact PAR30 Long Neck (Halogen replacement info below is based on ENERGY STAR® requirements for center beam candlepower)																	
PAR30L	Med	12	89989	LED12DP3L2/FL/TP	120	3	4.61	850	2300	2700	84	75W	25,000	▲		Damp	Accent, 35° beam, White
		12	22233	LED12DP3L2FL5KTP	120	3	4.61	1050	3000	5000	84	75W	25,000	▲		Damp	Accent, 35° beam, White
		12	98811	LED12DP3L3W83035	120	6	4.61	950	2600	3000	80	75W	25,000	▲	★	Damp	Flood, 35° beam, White, STIR
LED PAR30 HO - Universal 120-277V																	
		18	75089	LED18P30LW83015	120-277	6	4.6	1800	15500	3000	80	75W	25,000			Damp	Spot, 15° beam, White
		18	75091	LED18P30LW83025	120-277	6	4.6	1800	7000	3000	80	75W	25,000			Damp	Narrow Flood, 25° beam, White
		18	75065	LED18P30LW93015	120-277	6	4.6	1400	12500	3000	90	75W	25,000			Damp	Spot, 15° beam, MTO, 1000 Min. Qty, 12 Week Lead Time, White
		18	75078	LED18P30LW93025	120-277	6	4.6	1400	5000	3000	90	75W	25,000			Damp	Narrow Flood, 25° beam, White
LED PAR38 STIR																	
PAR38		15	32213	LED15DP38W830/40	120	6	5.04	1300	2300	3000	81	90W	25,000	▲	★	Wet	Flood, 40° beam, STIR

* The life rating is based on the hours of operation the lamp will provide before reaching 70% of its original lumen rating (L70).
** Minimum order quantity = 6
† Incandescent or halogen wattage equivalencies based on Energy Star guidelines using lumens or CBPB according to lamp type
†† Energy Star status: Certified as meeting Energy Star guidelines.
‡ UL 1993 Environmental Requirements for LED Lamps.
Location, damp – Exterior or interior location that is normally or periodically subject to condensation of moisture in, on, or adjacent to electrical equipment, and includes partially protected locations.
Location, dry – Location not normally subject to dampness, may include a location subject to temporary dampness, i.e., building under construction, provided ventilation is adequate to prevent an accumulation of moisture.
Location, wet – Location in which water or other liquid can drip, splash, or flow on or against electrical equipment.
Note: Product descriptions ending in "/TP" indicate a carded blister or clamshell package nested in a tray for shelf display. Cards also designed for hook display.

LED Directional Lamps (PAR) (continued)

Bulb Shape	Base Type	Watts	Order Code	Description	Volts	Case Qty	MOL (in)	Lumens Initial	CBCP	Initial Color Temp	CRI	†Wattage Equivalency	*Rated Life – Hours L70	Dimmable	††ENERGY STAR®	‡Location Rating	Additional Information
LED PAR38 – Low Glare – Visual Comfort Lens™ (90-watt halogen replacements – based on ENERGY STAR® requirements for center beam candlepower)																	
PAR38 	Med	12	63323	LED12DP38W827/25	120	6	5.32	960	4600	2700	80	90W	25,000	▲		Dry	Narrow Flood, 25° beam, White
		12	63334	LED12DP38W927/25	120	6	5.32	820	3900	2700	91	90W	25,000	▲		Dry	Narrow Flood, 25° beam, White
		12	92971	LED12D38W3827/40	120	6	5.31	1050	2300	2700	81	100W	25,000	▲	★	Damp	Flood, 40° beam, White
		12	92972	LED12D38W3830/25	120	6	5.31	1050	5500	3000	81	100W	25,000	▲	★	Damp	Narrow Flood, 25° beam, White
		12	92973	LED12D38WO383040	120	6	5.31	1050	2300	3000	80	100W	25,000	▲	★	Wet	Flood, 40° beam, White
		18	94909	LED18D38W830/15	120	6	5.31	1400	8700	3000	80	85W	25,000	▲		Dry	Spot, 15° beam, White
		18	92923	LED18D38W3927/25	120	6	5.31	1250	4900	2700	92	100W	25,000	▲	★	Damp	Narrow Flood, 25° beam, White
		18	92927	LED18D38W3930/15	120	6	5.32	1350	15,000	3000	92	75W	25,000	▲	★	Damp	Spot, 15° beam, White
		18	92933	LED18D38W3930/25	120	6	5.31	1350	5200	3000	92	100W	25,000	▲	★	Damp	Narrow Flood, 25° beam, White
		18	92934	LED18D38W3930/40	120	6	5.12	1350	3200	3000	92	120W	25,000	▲	★	Damp	Flood, 40° beam, White
		18	92950	LED18D38OW382725	120	6	5.12	1550	5800	2700	81	120W	25,000	▲	★	Wet	Narrow Flood, 25° beam, White
		18	92958	LED18D38OW382740	120	6	5.12	1550	3800	2700	81	120W	25,000	▲	★	Wet	Flood, 40° beam, White
		18	92963	LED18D38OW383025	120	6	5.12	1550	6000	3000	81	120W	25,000	▲	★	Wet	Narrow Flood, 25° beam, White
		18	92967	LED18D38OW383040	120	6	5.12	1550	4000	3000	81	150W	25,000	▲	★	Wet	Flood, 40° beam, White
		18	85085	LED18D38OW383525	120	6	5.31	1700	6500	3500	81	120W	25,000	▲	★	Wet	Narrow Flood, 25° beam, White
		18	87917	LED18D38OW383540	120	6	5.31	1700	4400	3500	81	150W	25,000	▲	★	Wet	Flood, 40° beam, White
		18	92961	LED18D38W3830/15	120	6	5.12	1750	20,000	3000	81	150W	25,000	▲	★	Damp	Spot, 15° beam, White
		18	92926	LED18D38W3927/40	120	6	5.12	1250	2900	2700	92	120W	25,000	▲	★	Damp	Flood, 40° beam, White
		18	93171	LED18D38OW384025	120	6	5.31	1700	6500	4000	81	120W	25,000	▲	★	Wet	Narrow Flood, 25° beam, White
		18	93172	LED18D38OW384040	120	6	5.31	1700	4400	4000	81	150W	25,000	▲	★	Wet	Flood, 40° beam, White
		18	65730	LED18D38OW385025	120	6	5.31	1700	6500	5000	81	120W	25,000	▲	★	Wet	Narrow Flood, 25° beam, White
		18	65731	LED18D38OW385040	120	6	5.31	1700	4400	5000	81	150W	25,000	▲	★	Wet	Flood, 40° beam, White
LED reveal® Whiter White Technology																	
PAR38		18	31300	LED18D38WW930/15	120	6	5.31	1170	10000	3000	91	100W	25,000	▲	★	Damp	Spot, 15° beam, MTO, 1000 Min. Qty, 12 Week Lead Time, White
		18	31301	LED18D38WW930/25	120	6	5.31	1170	4500	3000	91	100W	25,000	▲	★	Damp	Narrow Flood, 25° beam, White
LED Commercial PAR38 (Indoor/Outdoor) (Halogen replacement info below is based on ENERGY STAR® requirements for center beam candlepower)																	
PAR38 	Med	12	90132	LED12DP382W82725	120	6	5.12	850	4000	2700	84	85W	25,000	▲		Wet	Narrow Flood, 25° beam, White
		12	89990	LED12DP382WFL/TP	120	3	5.12	950	2700	3000	84	85W	25,000	▲		Wet	Flood, 35° beam, White
		18	89992	LED18DP38W/FL/TP	120	6	5.12	1300	2400	3000	84	100W	25,000	▲		Wet	Flood, 40° beam, White
		26	68183	LED26DP38S830/12	120	6	5.31	1500	24000	3000	82	130W	25,000	▲		Wet	Spot, 12° beam, Silver, 130-w Repl.
		26	68184	LED26DP38S830/25	120	6	5.31	1500	6800	3000	82	130W	25,000	▲		Wet	Narrow Flood, 25° beam, Silver, 130-w Repl.
		26	68185	LED26DP38S830/40	120	6	5.31	1500	3100	3000	82	120W	25,000	▲		Wet	Flood, 40° beam, Silver, 120-w Repl.
		26	68182	LED26DP38S840/40	120	6	5.31	1650	3200	4000	82	120W	25,000	▲		Wet	Flood, 40° beam, Silver, 120-w Repl.
		26	68181	LED26DP38S-FL/TP	120	6	5.31	1650	3200	4000	82	120W	25,000	▲		Wet	Flood, 40° beam, Silver, 120-w Repl.
		26	33647	LED26DP38S835/12	120	6	5.31	1900	31,000	3500	82	160W	25,000	▲	★	Wet	Spot, 12° beam, Silver
		26	70591	LED26DP38S835/40	120	6	5.31	1900	4,000	3500	82	160W	25,000	▲	★	Wet	Flood, 40° beam, Silver
		28	15139	LED28P38S830/15	120	6	5.31	2500	20,000	3000	81	150W	25,000		★	Damp	Spot, 15° beam, Silver, Non-Dimming
		28	25844	LED28P38S830/25	120	6	5.31	2400	11,000	3000	81	150W	25,000		★	Damp	Narrow Flood, 25° beam, Silver, Non-Dimming
		28	25953	LED28P38S830/40	120	6	5.31	2400	5,600	3000	81	150W	25,000		★	Damp	Flood, 40° beam, Silver, Non-Dimming

* The life rating is based on the hours of operation the lamp will provide before reaching 70% of its original lumen rating (L70).
** Minimum order quantity = 6
† Incandescent or halogen wattage equivalencies based on Energy Star guidelines using lumens or CBPB according to lamp type
†† Energy Star status: Certified as meeting Energy Star guidelines.
‡ UL 1993 Environmental Requirements for LED Lamps.
Location, damp – Exterior or interior location that is normally or periodically subject to condensation of moisture in, on, or adjacent to electrical equipment, and includes partially protected locations.
Location, dry – Location not normally subject to dampness, may include a location subject to temporary dampness, i.e., building under construction, provided ventilation is adequate to prevent an accumulation of moisture.
Location, wet – Location in which water or other liquid can drip, splash, or flow on or against electrical equipment.
Note: Product descriptions ending in "/TP" indicate a carded blister or clamshell package nested in a tray for shelf display. Cards also designed for hook display.

LED Lamps, Tubes and Modules

Bulb Shape	Base Type	Watts	Order Code	Description	Volts	Case Qty	MOL (in)	Lumens Initial	CBCP	Initial Color Temp	CRI	†Wattage Equivalency	*Rated Life – Hours L70	Dimmable	††ENERGY STAR®	‡Location Rating	Additional Information
LED HID – 400 Watt Metal Halide Replacement Lamp																	
ED37	EX39	60	43263	LED60/2M175/740		3	8.4	8,800	-	4000	70	175W	50,000			Damp	Open or Enclosed Rated, CWA ANSI-M57, M137, M152
		60	88107	LED60/2M175/750		3	8.4	8,800	-	5000	70	175W	50,000			Damp	Open or Enclosed Rated, CWA ANSI-M57, M137, M152
		80	43258	LED80/2M250/740		3	8.4	11,800	-	4000	70	250W	50,000			Damp	Open or Enclosed Rated, CWA ANSI-M58, M138, M153
		80	88099	LED80/2M250/750		3	8.4	11,800	-	5000	70	250W	50,000			Damp	Open or Enclosed Rated, CWA ANSI-M58, M138, M153
		165	21259	LED165/M400/740		3	11.42	20,000	-	4000	73	400W	50,000			Dry	Open Rated, ANSI - M59, M135, M155
LED Plug-in																	
Vertical 	G24q/ GX24	12	96801	LED12G24Q-V/827	#	6	5.31	950	-	2700	80		50,000			Damp	Requires Electronic Ballast, White
		12	96775	LED12G24Q-V/830	#	6	5.31	950	-	3000	80		50,000			Damp	Requires Electronic Ballast, White
		12	96689	LED12G24Q-V/835	#	6	5.31	1000	-	3500	80		50,000			Damp	Requires Electronic Ballast, White
		12	96771	LED12G24Q-V/840	#	6	5.31	1000	-	4000	80		50,000			Damp	Requires Electronic Ballast, White
	GX24q	18.5	39288	LED19GX24q-V/827	#	6	6.42	1800	-	2700	80		50,000			Damp	Requires Electronic Ballast, White
		18.5	39277	LED19GX24q-V/830	#	6	6.42	1850	-	3000	80		50,000			Damp	Requires Electronic Ballast, White
		18.5	39275	LED19GX24q-V/835	#	6	6.42	1950	-	3500	80		50,000			Damp	Requires Electronic Ballast, White
		18.5	39279	LED19GX24q-V/840	#	6	6.42	1950	-	4000	80		50,000			Damp	Requires Electronic Ballast, White
Horizontal 	G24q/ GX24	12	96799	LED12G24Q-H/827	#	6	5.31	950	-	2700	80		50,000			Damp	Requires Electronic Ballast, White
		12	96798	LED12G24Q-H/830	#	6	5.31	950	-	3000	80		50,000			Damp	Requires Electronic Ballast, White
		12	96761	LED12G24Q-H/835	#	6	5.31	1000	-	3500	80		50,000			Damp	Requires Electronic Ballast, White
		12	96769	LED12G24Q-H/840	#	6	5.31	1000	-	4000	80		50,000			Damp	Requires Electronic Ballast, White
	GX24q	18.5	39289	LED19GX24q-H/827	#	6	6.7	1800	-	2700	80		50,000			Damp	Requires Electronic Ballast, White
		18.5	39282	LED19GX24q-H/830	#	6	6.7	1850	-	3000	80		50,000			Damp	Requires Electronic Ballast, White
		18.5	39276	LED19GX24q-H/835	#	6	6.7	1950	-	3500	80		50,000			Damp	Requires Electronic Ballast, White
		18.5	39283	LED19GX24q-H/840	#	6	6.7	1950	-	4000	80		50,000			Damp	Requires Electronic Ballast, White
High Lumen Biax																	
HLBX	2G11	17	39073	LED172G11/830/10	#	10	22.3	2150	-	3000	80		40,000			Damp	Requires Electronic Ballast, White
		17	39074	LED172G11/835/10	#	10	22.3	2150	-	3500	80		40,000			Damp	Requires Electronic Ballast, White
		17	39075	LED172G11/840/10	#	10	22.3	2200	-	4000	80		40,000			Damp	Requires Electronic Ballast, White
		17	39076	LED172G11/850/10	#	10	22.3	2200	-	5000	80		40,000			Damp	Requires Electronic Ballast, White, MTO
RS Can																	
	E26	10	95853	LED10RS4/827E26P	120	12	5.88	700		2700	80	65W	50,000	▲	★	Damp	4" Can, Pigtail Attachment
		10	95854	LED10RS4/830E26P	120	12	5.88	700		3000	80	65W	50,000	▲	★	Damp	4" Can, Pigtail Attachment
		10	35365	LED10RS4/840E26P	102	12	7.5	700		4000	80	65W	50,000	▲	★	Damp	4" Can, Pigtail Attachment
	GU24	10	95855	LED10RS4/827GUP	120	12	5.88	700		2700	80	65W	50,000	▲	★	Damp	4" Can, Pigtail Attachment
		10	95856	LED10RS4/830GUP	120	12	5.88	700		3000	80	65W	50,000	▲	★	Damp	4" Can, Pigtail Attachment

Check ballast compatibility at GELighting.com/LED4pin-compatibility.
* The life rating is based on the hours of operation the lamp will provide before reaching 70% of its original lumen rating (L70).
** Minimum order quantity = 6
† Incandescent or halogen wattage equivalencies based on Energy Star guidelines using lumens or CBPB according to lamp type
†† Energy Star status: Certified as meeting Energy Star guidelines.
‡ UL 1993 Environmental Requirements for LED Lamps.
Location, damp – Exterior or interior location that is normally or periodically subject to condensation of moisture in, on, or adjacent to electrical equipment, and includes partially protected locations.
Location, dry – Location not normally subject to dampness, may include a location subject to temporary dampness, i.e., building under construction, provided ventilation is adequate to prevent an accumulation of moisture.
Location, wet – Location in which water or other liquid can drip, splash, or flow on or against electrical equipment.
Note: Product descriptions ending in "/TP" indicate a carded blister or clamshell package nested in a tray for shelf display. Cards also designed for hook display.

For the most up-to-date product information, see www.gelighting.com. To convert inches to millimeters, multiply by 25.4.

Bulb Shape	Base Type	Watts	Order Code	Description	Volts	Case Qty	MOL (in)	Lumens Initial	CBCP	Initial Color Temp	CRI	†Wattage Equivalency	*Rated Life – Hours L70	Dimmable	††ENERGY STAR®	‡Location Rating	Additional Information
RS Can (continued)																	
	E26	10	85153	LED10RS6/827E26P	120	12	7.5	700		2700	80	65W	50,000	▲	★	Damp	6" Can, Pigtail Attachment
		10	85160	LED10RS6/830E26P	120	12	7.5	700		3000	80	65W	50,000	▲	★	Damp	6" Can, Pigtail Attachment
		10	30367	LED10RS6/840E26P	120	12	7.5	700		4000	80	65W	50,000	▲	★	Damp	6" Can, Pigtail Attachment
	GU24	10	95851	LED10RS6/827GUP	120	12	7.5	700		2700	80	65W	50,000	▲	★	Damp	6" Can, Pigtail Attachment
		10	95852	LED10RS6/830GUP	120	12	7.5	700		3000	80	65W	50,000	▲	★	Damp	6" Can, Pigtail Attachment
	E26	13	70120	LED13RS6/827E26P	120	12	7.5	1000		2700	80	90W	50,000	▲	★	Damp	6" Can, Pigtail Attachment
		13	70122	LED13RS6/830E26P	120	12	7.5	1000		3000	80	90W	50,000	▲	★	Damp	6" Can, Pigtail Attachment
	GU24	13	70124	LED13RS6/827GUP	120	12	7.5	1000		2700	80	90W	50,000	▲	★	Damp	6" Can, Pigtail Attachment
		13	70127	LED13RS6/830GUP	120	12	7.5	1000		3000	80	90W	50,000	▲	★	Damp	6" Can, Pigtail Attachment

Bulb	Watts	Order Code	Description	Base	Qty	MOL (in.)	Initial Lumens	Initial Color Temp	CRI	Life (L70)	DLC	UL	‡Location Rating	Additional Information
LED Tubes														
Integrated 4 ft LED Plastic Tubes (Operates on Instant Start or Program Start Ballast)														
T8	18	31550	LED18ET8/4/830	G13	25	48	2150	3500K	80+	50K	Yes	Yes	Damp	Instant or PRS Ballastt
	18	93133	LED18ET8/4/835	G13	25	48	2250	3500K	80+	50K	Yes	Yes	Damp	Instant or PRS Ballast
	18	93135	LED18ET8/4/840	G13	25	48	2250	4000K	80+	50K	Yes	Yes	Damp	Instant or PRS Ballast
	18	93140	LED18ET8/4/850	G13	25	48	2350	5000K	80+	50K	Yes	Yes	Damp	Instant or PRS Ballast
	15	62399	LED15ET8/4/830	G13	25	48	1850	3000K	80+	50K	Yes	Yes	Damp	Instant or PRS Ballast
	15	62401	LED15ET8/4/835	G13	25	48	1950	3500K	80+	50K	Yes	Yes	Damp	Instant or PRS Ballast
	15	62402	LED15ET8/4/840	G13	25	48	1950	4000K	80+	50K	Yes	Yes	Damp	Instant or PRS Ballast
	15	62409	LED15ET8/4/850	G13	25	48	2050	5000K	80+	50K	Yes	Yes	Damp	Instant or PRS Ballast
	15	62410	LED15ET8/4/865	G13	25	48	1950	6500K	80+	50K	-	Yes	Damp	Instant or PRS Ballast
	12	61218	LED12ET8/4/830	G13	25	48	1550	3000K	80+	50K	Yes	Yes	Damp	Instant or PRS Ballast
	12	61223	LED12ET8/4/835	G13	25	48	1600	3500K	80+	50K	Yes	Yes	Damp	Instant or PRS Ballast
	12	61271	LED12ET8/4/840	G13	25	48	1600	4000K	80+	50K	Yes	Yes	Damp	Instant or PRS Ballast
	12	61327	LED12ET8/4/850	G13	25	48	1700	5000K	80+	50K	Yes	Yes	Damp	Instant or PRS Ballast
	12	61329	LED12ET8/4/865	G13	25	48	1600	6500K	80+	50K	-	Yes	Damp	Instant or PRS Ballast
Integrated 3 ft LED Plastic Tubes (Operates on Instant Start or Program Start Ballast)														
T8	12	31554	LED12ET8/3/830	G13	25	36	1350	3500K	80+	50K	-	Yes	Damp	Instant or PRS Ballast
	12	26544	LED12ET8/3/835	G13	25	36	1400	3500K	80+	50K	-	Yes	Damp	Instant or PRS Ballast
	12	26625	LED12ET8/3/840	G13	25	36	1400	4000K	80+	50K	-	Yes	Damp	Instant or PRS Ballast
	12	26627	LED12ET8/3/850	G13	25	36	1500	5000K	80+	50K	-	Yes	Damp	Instant or PRS Ballast
Integrated 2 ft LED Plastic Tubes (Operates on Instant Start or Program Start Ballast)														
T8	9	31557	LED9ET8/2/830	G13	25	24	1100	3500K	80+	50K	Yes	Yes	Damp	Instant or PRS Ballast
	9	26635	LED9ET8/2/835	G13	25	24	1100	3500K	80+	50K	Yes	Yes	Damp	Instant or PRS Ballast
	9	26648	LED9ET8/2/840	G13	25	24	1100	4000K	80+	50K	Yes	Yes	Damp	Instant or PRS Ballast
	9	26676	LED9ET8/2/850	G13	25	24	1100	5000K	80+	50K	Yes	Yes	Damp	Instant or PRS Ballast
Integrated U6 LED Plastic Tubes (Operates on Instant Start or Program Start Ballast)														
T8	13	43120	LED13ET8/U6/830	G13	12	22.5	1800	3000K	80+	50K	-	Yes	Damp	Instant or PRS Ballast
	13	43125	LED13ET8/U6/835	G13	12	22.5	1850	3500K	80+	50K	-	Yes	Damp	Instant or PRS Ballast
	13	43129	LED13ET8/U6/840	G13	12	22.5	1900	4000K	80+	50K	-	Yes	Damp	Instant or PRS Ballast
	13	43130	LED13ET8/U6/850	G13	12	22.5	1900	5000K	80+	50K	-	Yes	Damp	Instant or PRS Ballast
Integrated 4 ft LED Glass Tubes (Type A)														
T8	18	35767	LED18ET8/G/4/830	G13	20	48	2200	3000K	80+	50K	Yes	Yes	Damp	Instant or PRS Ballast
	18	35768	LED18ET8/G/4/835	G13	20	48	2300	3500K	80+	50K	Yes	Yes	Damp	Instant or PRS Ballast
	18	35769	LED18ET8/G/4/840	G13	20	48	2300	4000K	80+	50K	Yes	Yes	Damp	Instant or PRS Ballast
	18	35772	LED18ET8/G/4/850	G13	20	48	2400	5000K	80+	50K	Yes	Yes	Damp	Instant or PRS Ballast
	18	35773	LED18ET8/G/4/865	G13	20	48	2300	6500K	80+	50K	-	Yes	Damp	Instant or PRS Ballast
	15	35790	LED15ET8/G/4/830	G13	20	48	2000	3000K	80+	50K	Yes	Yes	Damp	Instant or PRS Ballast
	15	35791	LED15ET8/G/4/835	G13	20	48	2000	3500K	80+	50K	Yes	Yes	Damp	Instant or PRS Ballast
	15	35793	LED15ET8/G/4/840	G13	20	48	2000	4000K	80+	50K	Yes	Yes	Damp	Instant or PRS Ballast
	15	35797	LED15ET8/G/4/850	G13	20	48	2100	5000K	80+	50K	Yes	Yes	Damp	Instant or PRS Ballast

Check ballast compatibility at GELighting.com/LED4pin-compatibility.
* The life rating is based on the hours of operation the lamp will provide before reaching 70% of its original lumen rating (L70).
** Minimum order quantity = 6
† Incandescent or halogen wattage equivalencies based on Energy Star guidelines using lumens or CBPB according to lamp type
†† Energy Star status: Certified as meeting Energy Star guidelines.
‡ UL 1993 Environmental Requirements for LED Lamps.
Location, damp – Exterior or interior location that is normally or periodically subject to condensation of moisture in, on, or adjacent to electrical equipment, and includes partially protected locations.
Location, dry – Location not normally subject to dampness, may include a location subject to temporary dampness, i.e., building under construction, provided ventilation is adequate to prevent an accumulation of moisture.
Location, wet – Location in which water or other liquid can drip, splash, or flow on or against electrical equipment.
Note: Product descriptions ending in "/TP" indicate a carded blister or clamshell package nested in a tray for shelf display. Cards also designed for hook display.

Bulb	Watts	Order Code	Description	Base	Qty	MOL (in.)	Initial Lumens	Initial Color Temp	CRI	Life (L70)	DLC	UL	‡Location Rating	Additional Information
LED Tubes (continued)														
Integrated 4 ft LED Glass Tubes (Type A) (continued)														
T8	15	35798	LED15ET8/G/4/865	G13	20	48	2000	6500K	80+	50K	-	Yes	Damp	Instant or PRS Ballast
	15	43284	LED12ET8/G/4/830	G13	20	48	1600	3000K	80+	50K	Yes	Yes	Damp	Instant or PRS Ballast
	15	43288	LED12ET8/G/4/835	G13	20	48	1650	3500K	80+	50K	Yes	Yes	Damp	Instant or PRS Ballast
	15	43291	LED12ET8/G/4/840	G13	20	48	1650	4000K	80+	50K	Yes	Yes	Damp	Instant or PRS Ballast
	15	43293	LED12ET8/G/4/850	G13	20	48	1750	5000K	80+	50K	Yes	Yes	Damp	Instant or PRS Ballast
Integrated 4 ft Value LED Glass Tubes (Type A)														
T8	15	35896	LED15ET8/835-V6P	G13	6	48	1750	3500K	80+	36K	No	Yes	Damp	Instant or PRS Ballast
	15	35900	LED15ET8/840-V6P	G13	6	48	1750	4000K	80+	36K	No	Yes	Damp	Instant or PRS Ballast
	15	35911	LED15ET8/850-V6P	G13	6	48	1800	5000K	80+	36K	No	Yes	Damp	Instant or PRS Ballast
	15	35913	LED15ET8/865-V6P	G13	6	48	1800	6500K	80+	36K	No	Yes	Damp	Instant or PRS Ballast
Integrated 3 ft LED Glass Tubes (Type A)														
T8	11	35783	LED11ET8/G/3/830	G13	20	36	1350	3000K	80+	50K	-	Yes	Damp	Instant or PRS Ballast
	11	35784	LED11ET8/G/3/835	G13	20	36	1400	3500K	80+	50K	-	Yes	Damp	Instant or PRS Ballast
	11	35788	LED11ET8/G/3/840	G13	20	36	1400	4000K	80+	50K	-	Yes	Damp	Instant or PRS Ballast
	11	35789	LED11ET8/G/3/850	G13	20	36	1500	5000K	80+	50K	-	Yes	Damp	Instant or PRS Ballast
Integrated 2 ft LED Glass Tubes (Type A)														
T8	8	35775	LED8ET8/G/2/830	G13	20	24	1100	3000K	80+	50K	Yes	Yes	Damp	Instant or PRS Ballast
	8	35776	LED8ET8/G/2/835	G13	20	24	1100	3500K	80+	50K	Yes	Yes	Damp	Instant or PRS Ballast
	8	35778	LED8ET8/G/2/840	G13	20	24	1100	4000K	80+	50K	Yes	Yes	Damp	Instant or PRS Ballast
	8	35779	LED8ET8/G/2/850	G13	20	24	1100	5000K	80+	50K	Yes	Yes	Damp	Instant or PRS Ballast
Remote 4 ft LED Plastic Tubes (Operates with Remote Driver)														
T8	18	94381	LED21T8/4/835	G13	10	48	2400	3500K	80+	50K	Yes	Yes	Damp	Requires Driver
	18	94382	LED21T8/4/840	G13	10	48	2500	4000K	80+	50K	Yes	Yes	Damp	Requires Driver
	18	94383	LED21T8/4/850	G13	10	48	2500	5000K	80+	50K	Yes	Yes	Damp	Requires Driver
	18	26059	LED21T8/4/865	G13	10	48	2400	6500K	80+	50K	-	Yes	Damp	Requires Driver
	13	38954	LED15T8/4/830	G13	10	48	1700	3000K	80+	50K	Yes	Yes	Damp	Requires Driver
	13	38957	LED15T8/4/835	G13	10	48	1800	3500K	80+	50K	Yes	Yes	Damp	Requires Driver
	13	38958	LED15T8/4/840	G13	10	48	1800	4000K	80+	50K	Yes	Yes	Damp	Requires Driver
	13	38962	LED15T8/4/850	G13	10	48	1800	5000K	80+	50K	Yes	Yes	Damp	Requires Driver
	13	38964	LED15T8/4/865	G13	10	48	1800	6500K	80+	50K	-	Yes	Damp	Requires Driver
Remote 3 ft LED Plastic Tubes (Operates with Remote Driver)														
T8	16	82343	LED18T8/3/835	G13	10	36	1800	3500K	80+	50K	-	Yes	Damp	Requires Driver
	16	82345	LED18T8/3/840	G13	10	36	1800	4000K	80+	50K	-	Yes	Damp	Requires Driver
	16	82346	LED18T8/3/850	G13	10	36	1800	5000K	80+	50K	-	Yes	Damp	Requires Driver
Remote 2 ft LED Plastic Tubes (Operates with Remote Driver)														
T8	8	65706	LED9T8/2/835	G13	20	24	1000	3500K	80+	50K	Yes	Yes	Damp	Requires Driver
	8	65707	LED9T8/2/840	G13	20	24	1100	4000K	80+	50K	Yes	Yes	Damp	Requires Driver
	8	65711	LED9T8/2/850	G13	20	24	1100	5000K	80+	50K	Yes	Yes	Damp	Requires Driver
	8	92997	LED9T8/2/865	G13	20	24	1000	6500K	80+	50K	-	Yes	Damp	Requires Driver
Remote LED Plastic U-Tubes (Operates with Remote Driver)														
T8	12	28084	LED14T8/U/835	G13	15	22.5	1700	3500K	80+	50K	-	Yes	Damp	Requires Driver
	12	28164	LED14T8/U/840	G13	15	22.5	1700	4000K	80+	50K	-	Yes	Damp	Requires Driver
Remote 8 ft LED Glass Tubes (Operates on Remote Driver)														
T8	30	62326	LED36T8/G/8/830	Fa8	20	96	4200	3000K	80+	50K	-	Yes	Damp	Requires Driver, Made in USA
	30	62327	LED36T8/G/8/835	Fa8	20	96	4400	3500K	80+	50K	-	Yes	Damp	Requires Driver, Made in USA
	30	62329	LED36T8/G/8/840	Fa8	20	96	4400	4000K	80+	50K	-	Yes	Damp	Requires Driver, Made in USA
	30	62349	LED36T8/G/8/850	Fa8	20	96	4500	5000K	80+	50K	-	Yes	Damp	Requires Driver, Made in USA
Remote 4 ft LED Glass Tubes (Operates on Remote Driver)														
T8	18	62428	LED21T8/G/4/835	G13	10	48	2400	3500K	80+	50K	Yes	Yes	Damp	Requires Driver
	18	62485	LED21T8/G/4/840	G13	10	48	2500	4000K	80+	50K	Yes	Yes	Damp	Requires Driver
	18	62487	LED21T8/G/4/850	G13	10	48	2500	5000K	80+	50K	Yes	Yes	Damp	Requires Driver
	18	62406	LED21T8/G4/835HL	G13	10	48	2750	3500K	80+	50K	Yes	Yes	Damp	Requires Driver
	18	62407	LED21T8/G4/840HL	G13	10	48	2800	4000K	80+	50K	Yes	Yes	Damp	Requires Driver
	18	62408	LED21T8/G4/850HL	G13	10	48	2800	5000K	80+	50K	Yes	Yes	Damp	Requires Driver
	18	91475	LED21T8/G4/830US	G13	10	48	2600	3000K	80+	50K	Yes	Yes	Damp	Requires Driver, Made in USA
	18	91496	LED21T8/G4/835US	G13	10	48	2600	3500K	80+	50K	Yes	Yes	Damp	Requires Driver, Made in USA
	18	91497	LED21T8/G4/840US	G13	10	48	2600	4000K	80+	50K	Yes	Yes	Damp	Requires Driver, Made in USA
	18	91498	LED21T8/G4/850US	G13	10	48	2600	5000K	80+	50K	Yes	Yes	Damp	Requires Driver, Made in USA
	13	38944	LED15T8/G/4/830	G13	10	48	1700	3000K	80+	50K	Yes	Yes	Damp	Requires Driver
	13	38945	LED15T8/G/4/835	G13	10	48	1750	3500K	80+	50K	Yes	Yes	Damp	Requires Driver

* The life rating is based on the hours of operation the lamp will provide before reaching 70% of its original lumen rating (L70).
** Minimum order quantity = 6
† Incandescent or halogen wattage equivalencies based on Energy Star guidelines using lumens or CBPB according to lamp type
†† Energy Star status: Certified as meeting Energy Star guidelines.
‡ UL 1993 Environmental Requirements for LED Lamps.
Location, damp – Exterior or interior location that is normally or periodically subject to condensation of moisture in, on, or adjacent to electrical equipment, and includes partially protected locations.
Location, dry – Location not normally subject to dampness, may include a location subject to temporary dampness, i.e., building under construction, provided ventilation is adequate to prevent an accumulation of moisture.
Location, wet – Location in which water or other liquid can drip, splash, or flow on or against electrical equipment.
Note: Product descriptions ending in "/TP" indicate a carded blister or clamshell package nested in a tray for shelf display. Cards also designed for hook display.

LED Tubes (continued)

Bulb	Watts	Order Code	Description	Base	Qty	MOL (in.)	Initial Lumens	Initial Color Temp	CRI	Life (L70)	DLC	UL	‡Location Rating	Additional Information
Remote 4 ft LED Glass Tubes (Operates on Remote Driver) (continued)														
T8	13	38950	LED15T8/G/4/840	G13	10	48	1800	4000K	80+	50K	Yes	Yes	Damp	Requires Driver
	13	38951	LED15T8/G/4/850	G13	10	48	1800	5000K	80+	50K	Yes	Yes	Damp	Requires Driver
	13	38952	LED15T8/G/4/865	G13	10	48	1800	6500K	80+	50K	-	YES	Damp	Requires Driver
	10	76194	LED12T8/G/4/830	G13	10	48	1550	3000K	80+	50K	Yes	Yes	Damp	Requires Driver
	10	76264	LED12T8/G/4/835	G13	10	48	1600	3500K	80+	50K	Yes	Yes	Damp	Requires Driver
	10	76265	LED12T8/G/4/840	G13	10	48	1650	4000K	80+	50K	Yes	Yes	Damp	Requires Driver
	10	76271	LED12T8/G/4/850	G13	10	48	1650	5000K	80+	50K	Yes	Yes	Damp	Requires Driver
	10	76278	LED12T8/G/4/865	G13	10	48	1650	6500K	80+	50K	-	Yes	Damp	Requires Driver
Remote 4 ft LED Glass T5 Tubes (Operates on Remote Driver)														
T5	31	91973	LED36T5/G/4/830	G5	20	46	4100	3000K	80+	50K	-	Yes	Damp	Requires Driver
	31	91976	LED36T5/G/4/835	G5	20	46	4200	3500K	80+	50K	-	Yes	Damp	Requires Driver
	31	91977	LED36T5/G/4/840	G5	20	46	4400	4000K	80+	50K	-	Yes	Damp	Requires Driver
	31	91997	LED36T5/G/4/850	G5	20	46	4500	5000K	80+	50K	-	Yes	Damp	Requires Driver
	31	92006	LED36T5/G/4/865	G5	20	46	4500	6500K	80+	50K	-	Yes	Damp	Requires Driver
Remote 3 ft LED Glass Tubes (Operates on Remote Driver)														
T8	16	38257	LED18T8/G/3/830	G13	10	36	1800	3000K	80+	50K	-	Yes	Damp	Requires Driver
	16	38258	LED18T8/G/3/835	G13	10	36	1800	3500K	80+	50K	-	Yes	Damp	Requires Driver
	16	38260	LED18T8/G/3/840	G13	10	36	1900	4000K	80+	50K	-	Yes	Damp	Requires Driver
	16	38261	LED18T8/G/3/850	G13	10	36	1900	5000K	80+	50K	-	Yes	Damp	Requires Driver
Remote 2 ft LED Glass Tubes (Operates on Remote Driver)														
T8	8	38933	LED9T8/G/2/830	G13	20	24	1000	3000K	80+	50K	Yes	Yes	Damp	Requires Driver
	8	38935	LED9T8/G/2/835	G13	20	24	1000	3500K	80+	50K	Yes	Yes	Damp	Requires Driver
	8	38936	LED9T8/G/2/840	G13	20	24	1100	4000K	80+	50K	Yes	Yes	Damp	Requires Driver
	8	38939	LED9T8/G/2/850	G13	20	24	1100	5000K	80+	50K	Yes	Yes	Damp	Requires Driver
	8	38943	LED9T8/G/2/865	G13	20	24	1000	6500K	80+	50K	-	Yes	Damp	Requires Driver
Remote 2 ft LED Glass T5 Tubes (Operates on Remote Driver)														
T5	13	76150	LED15T5/G/2/830	G5	20	24	1800	3000K	80+	50K	-	Yes	Damp	Requires Driver
	13	76164	LED15T5/G/2/835	G5	20	24	1850	3500K	80+	50K	-	Yes	Damp	Requires Driver
	13	76129	LED15T5/G/2/840	G5	20	24	1900	4000K	80+	50K	-	Yes	Damp	Requires Driver
	13	76167	LED15T5/G/2/850	G5	20	24	1900	5000K	80+	50K	-	Yes	Damp	Requires Driver
	13	76192	LED15T5/G/2/865	G5	20	24	1900	6500K	80+	50K	-	Yes	Damp	Requires Driver
Remote Glass U6 Tubes (Operates on Remote Driver)														
T8	13	43131	LED15T8/G/U6/830	G13	12	22.5	1700	3000K	80+	50K	-	Yes	Damp	Requires Driver
	13	43135	LED15T8/G/U6/835	G13	12	22.5	1800	3500K	80+	50K	-	Yes	Damp	Requires Driver
	13	43143	LED15T8/G/U6/840	G13	12	22.5	1800	4000K	80+	50K	-	Yes	Damp	Requires Driver
	13	43145	LED15T8/G/U6/850	G13	12	22.5	1800	5000K	80+	50K	-	Yes	Damp	Requires Driver

Remote Drivers

	Watts	Order Code	Description	Input Volts (V)	Qty	Output Current (A)	Fre-quency	Eff	Output	Output Voltage (V)	Temp (Min)	Temp (Max)	Dimmable	Additional Information
Lightech™ Drivers - Non-dimming														
	18	93100	LED9T8/DR/UN/2L	120-277	10	0.27x2	50/60 Hz	>.9	DC	26-34	-4°F	113°F		Maximum 2 Tube (non potted)
	30	38970	LED15T8/DR/UN/2L	120-277	10	.44x2	50/60 Hz	>.9	DC	26-34	-4°F	113°F		Maximum 2 Tube (non potted)
	36	82347	LED18T8/DR/UN/2L	120-277	10	0.53x2	50/60 Hz	>.9	DC	26-34	-4°F	113°F		Maximum 2 Tube (non potted)
	24	76289	LED12T8/DR/2L	120-277	10	.21x2	50/60 Hz	>.9	DC	26-34	-4°F	113°F		Maximum 2 Tube
	21	94384	LED21T8/DR/1L	120-277	10	0.62	50/60 Hz	>.9	DC	26-34	-4°F	113°F		Maximum 1 Tube
	42	94385	LED21T8/DR/2L	120-277	10	0.62x2	50/60 Hz	>.9	DC	26-34	-4°F	113°F		Maximum 2 Tube
Lightech™ Drivers - Dimming														
	42	28174	LED14/DR/D3L	120-277	10	0.43x3	50/60 Hz	>.9	DC	26-34	-4°F	113°F	▲	Maximum 3 Tube
	24	76290	LED12T8/DR/D2L	120-277	10	.21x2	50/60 Hz	>.9	DC	26-34	-4°F	113°F	▲	Maximum 2 Tube
	48	76318	LED12T8/DR/D4L	120-277	10	.21x4	50/60 Hz	>.9	DC	26-34	-4°F	113°F	▲	Maximum 4 Tube
	30	38974	LED15T8/DR/D2L	120-277	10	.44x2	50/60 Hz	>.9	DC	26-34	-4°F	113°F	▲	Maximum 2 Tube
	60	38975	LED15T8/DR/D4L	120-277	10	.44x4	50/60 Hz	>.9	DC	26-34	-4°F	113°F	▲	Maximum 4 Tube
	36	88141	LED18T8/DR/D2L	120-277	10	0.53x2	50/60 Hz	>.9	DC	26-34	-4°F	113°F	▲	Maximum 2 Tube
	72	88139	LED18T8/DR/D4L	120-277	10	0.53x4	50/60 Hz	>.9	DC	26-34	-4°F	113°F	▲	Maximum 4 Tube
	42	60041	LED21T8/DR/D2L	120-277	10	0.62x2	50/60 Hz	>.9	DC	26-34	-4°F	113°F	▲	Maximum 2 Tube
	84	62030	LED21T8/DR/D4L	120-277	10	0.62x4	50/60 Hz	>.9	DC	26-34	-4°F	113°F	▲	Maximum 4 Tube
	45	34016	LED21T8/DR/VLC2L	120-277	10	0.62x2	50/60 Hz	>.9	DC	26-34	-4°F	113°F	▲	Maximum 2 Tube
	72	63126	LED36T8/DR/D2L	120-277	10	1.06x2	50/60 Hz	>.9	DC	26-34	-4°F	113°F	▲	Maximum 2 Tube
	144	92013	LED36T8/DR/D4L	120-277	10	1.06x4	50/60 Hz	>.9	DC	26-34	-4°F	113°F	▲	Maximum 4 Tube

* The life rating is based on the hours of operation the lamp will provide before reaching 70% of its original lumen rating (L70).
** Minimum order quantity = 6
† Incandescent or halogen wattage equivalencies based on Energy Star guidelines using lumens or CBPB according to lamp type
†† Energy Star status: Certified as meeting Energy Star guidelines.
‡ UL 1993 Environmental Requirements for LED Lamps.
Location, damp – Exterior or interior location that is normally or periodically subject to condensation of moisture in, on, or adjacent to electrical equipment, and includes partially protected locations.
Location, dry – Location not normally subject to dampness, may include a location subject to temporary dampness, i.e., building under construction, provided ventilation is adequate to prevent an accumulation of moisture.
Location, wet – Location in which water or other liquid can drip, splash, or flow on or against electrical equipment.
Note: Product descriptions ending in "/TP" indicate a carded blister or clamshell package nested in a tray for shelf display. Cards also designed for hook display.

LED Lamps, Tubes and Modules

Series	Order Code	Description	Body Color	Nominal Lumens [1]	CCT (Kelvin)	CRI	Nominal Watts	Color Variation (MacAdam)	Rated Drive Current (mA)	Rated Life (hours) [2]
Infusion™ LED Modules										
M1000 Series	19192	M1000/827/W/G4	White	1000	2700	> 80	10.5	< 4-step	700	50,000
	19193	M1000/830/W/G4	White	1100	3000	> 80	10.5	< 4-step	700	50,000
	19195	M1000/835/W/G4	White	1100	3500	> 80	10.5	< 4-step	700	50,000
	19196	M1000/930/W/G4	White	800	3000	90	10.5	< 2-step	700	50,000
	19197	M1000/840/W/G4	White	1100	4000	> 80	10.5	< 4-step	700	50,000
M1500 Series	19198	M1500/827/W/G4	White	1400	2700	> 80	14.5	< 4-step	700	50,000
	19200	M1500/830/W/G4	White	1500	3000	> 80	14.5	< 4-step	700	50,000
	19201	M1500/835/W/G4	White	1500	3500	> 80	14.5	< 4-step	700	50,000
	19202	M1500/930/W/G4	White	1200	3000	90	14.5	< 2-step	700	50,000
	19207	M1500/840/W/G4	White	1500	4000	> 80	14.5	< 4-step	700	50,000
M2000 Series	19209	M2000/827/W/G4	White	2000	2700	> 80	21	< 4-step	1400	50,000
	19210	M2000/830/W/G4	White	2100	3000	> 80	21	< 4-step	1400	50,000
	19211	M2000/835/W/G4	White	2200	3500	> 80	21	< 4-step	1400	50,000
	19214	M2000/930/W/G4	White	1700	3000	90	21	< 2-step	1400	50,000
	19215	M2000/840/W/G4	White	2200	4000	> 80	21	< 4-step	1400	50,000
M3000 Series	19216	M3000/827/W/G4	White	2800	2700	> 80	29.5	< 4-step	1400	50,000
	19218	M3000/830/W/G4	White	3000	3000	> 80	29.5	< 4-step	1400	50,000
	19220	M3000/835/W/G4	White	3000	3500	> 80	29.5	< 4-step	1400	50,000
	19224	M3000/930/W/G4	White	2300	3000	90	29.5	< 2-step	1400	50,000
	19225	M3000/840/W/G4	White	3100	4000	> 80	29.5	< 4-step	1400	50,000
M4500 Series	19226	M4500/827/W/G4	White	4300	2700	> 80	46	< 4-step	1400	50,000
	19230	M4500/830/W/G4	White	4500	3000	> 80	46	< 4-step	1400	50,000
	19231	M4500/835/W/G4	White	4600	3500	> 80	46	< 4-step	1400	50,000
	19307	M4500/930/W/G4	White	3600	3000	90	46	< 2-step	1400	50,000
	19337	M4500/840/W/G4	White	4700	4000	> 80	46	< 4-step	1400	50,000

[1]Lumens are 'hot lumens' measured at steady state at a Tp temperature of 65°C
[2]Rated life refers to 70% lumen maintenance (L70).
Note: For use in dry location only or in luminaire which is designed and tested to an environmental location appropriate for intended operating conditions.

Series	Order Code	Description	Body Color	Nominal Lumens [1]	CCT (Kelvin)	CRI	Nominal Watts	Beam Angle (°)	Rated Drive Current (mA)	Rated Life (hours) [2]
Infusion™ LED Downlight Modules (DLM)										
DLM1000 Series	99607	DLM1000/927	White	1000	2700	92	13	90	700	50,000
	99608	DLM1000/930	White	1000	3000	92	13	90	700	50,000
	99609	DLM1000/935	White	1000	3500	92	13	90	700	50,000
	99610	DLM1000/940	White	1000	4000	92	13	90	700	50,000
DLM1500 Series	99611	DLM1500/927	White	1475	2700	92	19	90	700	50,000
	99612	DLM1500/930	White	1475	3000	92	19	90	700	50,000
	99613	DLM1500/935	White	1475	3500	92	19	90	700	50,000
	99614	DLM1500/940	White	1475	4000	92	19	90	700	50,000
DLM2000 Series	99615	DLM2000/927	White	2000	2700	92	25	90	700	50,000
	99616	DLM2000/930	White	2000	3000	92	25	90	700	50,000
	99617	DLM2000/935	White	2000	3500	92	25	90	700	50,000
	99618	DLM2000/940	White	2000	4000	92	25	90	700	50,000
DLM3000 Series	99619	DLM3000/927	White	3000	2700	92	37	90	1,400	50,000
	99620	DLM3000/930	White	3000	3000	92	37	90	1,400	50,000
	99621	DLM3000/935	White	3000	3500	92	37	90	1,400	50,000
	99622	DLM3000/940	White	3000	4000	92	37	90	1,400	50,000
DLM4000 Series	99623	DLM4000/927	White	3925	2700	92	49	90	1,400	50,000
	99624	DLM4000/930	White	3925	3000	92	49	90	1,400	50,000
	99625	DLM4000/935	White	3925	3500	92	49	90	1,400	50,000
	99626	DLM4000/940	White	3925	4000	92	49	90	1,400	50,000

	Order Code	Description	Body Color	Nominal Lumens [1]	CCT (Kelvin)	CRI	Nominal Watts	Color Variation (MacAdam)	Rated Drive Current (mA)	Rated Life (hours) [2]
Infusion™ LED Narrow Punch Modules (NPM)										
	98471	MP30/827/W/N	White	1300	2700	> 80	25	< 4-step	700	50,000
	98472	MP30/830/W/N	White	1400	3000	> 80	25	< 4-step	700	50,000
	98473	MP30/930/W/N	White	1100	3000	> 87	25	< 2-step	700	50,000
	98474	MP30/840/W/N	White	1500	4000	> 80	25	< 4-step	700	50,000

[1]Lumens are 'hot lumens' measured at steady state at a Tp temperature of 65°C
[2]Rated life refers to 70% lumen maintenance (L70).
Note: For use in dry location only or in luminaire which is designed and tested to an environmental location appropriate for intended operating conditions.

	Order Code	Description	Body Color	Corresponding Module Series	Beam Category	Nominal Beam Angle (°)
Infusion™ Optics						
	97204	OP1000/SP/W	White	1000	Spot	14
	97205	OP1500/SP/W	White	1500	Spot	14
	97208	OP1000/1500/FL/W OP3000/WFL/W	White	1000 and 1500 3000 and 4500	Flood Wide Flood	25 / 25 35 / 35
	65294	OP1000/1500/FL/B, OP3000/WFL/B	Black	1000 and 1500 3000 and 4500	Flood Wide Flood	25 / 25 35 / 35
	98480	OP10001500FL100W	White	1000 and 1500	Flood	25 /25
	98486	OP10001500FL100B	Black	1000 and 1500	Flood	25 /25
	99995	OP10001500WFL50W	White	1000 and 1500	Wide Flood	25 / 25
	99996	OP10001500WFL50B	Black	1000 and 1500	Wide Flood	25 / 25
	97206	OP1000/1500/WFL	White	1000 and 1500	Wide Flood	35 / 35
	65295	OP1000/1500/WFLB	Black	1000 and 1500	Wide Flood	35 / 35
	98483	OP10/15/WFL/100W	White	1000 and 1500	Wide Flood	35 / 35
	98489	OP10/15/WFL/100B	Black	1000 and 1500	Wide Flood	35 / 35
	97207	OP1000/1500/VWFL	White	1000 and 1500	Very Wide Flood	55 / 55
	65296	OP1000/1500VWFLB	Black	1000 and 1500	Very Wide Flood	55 / 55
	98485	OP10-45/VWFL100W	White	1000, 1500, 2000, 3000, 4500	Very Wide Flood	55 / 55 / 55 / 55 / 55
	98491	OP10-45/VWFL100B	Black	1000, 1500, 2000, 3000, 4500	Very Wide Flood	55 / 55 / 55 / 55 / 55
	64996	OP2000/3000/FL	White	2000 , 3000 , 4500	Flood	25 / 25 / 25
	65297	OP2000/3000/FL/B	Black	2000 , 3000 , 4500	Flood	25 / 25 / 25
	98481	OP2000/FL/100/W	White	2000	Flood	25
	98487	OP2000/FL/100/B	Black	2000	Flood	25
	64995	OP2000/WFL	White	2000	Wide Flood	35
	65298	OP2000/WFL/B	Black	2000	Wide Flood	35
	98484	OP20-45/WFL/100W	White	2000 , 3000 , 4500	Wide Flood	35 / 35 / 35
	98490	OP20-45/WFL/100B	Black	2000 , 3000 , 4500	Wide Flood	35 / 35 / 35
	64994	OP2000/3000/VWFL	White	2000 , 3000 , 4500	Very Wide Flood	55 / 55
	65301	OP2000/3000VWFLB	Black	2000 , 3000 , 4500	Very Wide Flood	55 / 55
	98482	OP30004500FL100W	White	3000 and 4500	Flood	25 / 25
	98488	OP30004500FL100B	Black	3000 and 4500	Flood	25 / 25
	94637	OP30/SP/50MM/W	White	NPM	Narrow Spot	13
	94638	OP30/SP/50MM/B	Black	NPM	Narrow Spot	13
	94635	OP30/SP/75MM/G2W	White	NPM	Narrow Spot	11
	94636	OP30/SP/75MM/G2B	Black	NPM	Narrow Spot	11
	94633	OP30/SP100MM/G2W	White	NPM	Narrow Spot	8
	94634	OP30/SP100MM/G2B	Black	NPM	Narrow Spot	8
	98477	OP30/SP/75MM/W	White	NPM	Narrow Spot	12
	98478	OP30/SP/100MM/W	White	NPM	Narrow Spot	10
	98475	OP30/SP/75MM/B	Black	NPM	Narrow Spot	12
	98476	OP30/SP/100MM/B	Black	NPM	Narrow Spot	10

	Order Code	Description	Body Color	Lead Insulation	Lead Length (mm)
Infusion™ Collar					
	61450	MACC07HOLDERW	White	None	n/a
	78835	MACC07HOLDERB	Black	None	n/a
	66233	MHOLDERW/PVC600	White	PVC	600
	66232	MHOLDERB/PVC600	Black	PVC	600

Notes

Stage and Studio Lamps

Bulb Identification

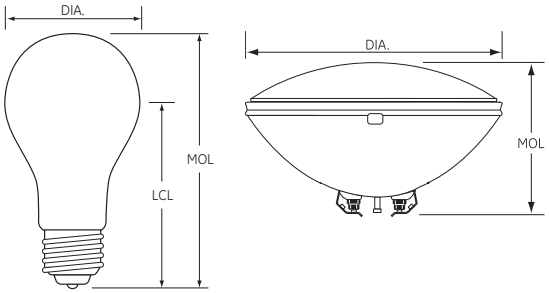

DIA: Diameter of bulb at widest point.

MOL: Maximum Overall Length including base or pins.

LCL: Distance between the center of the arc tube and the Light Center Length reference plane.

Note: Lamp drawings are not drawn to scale. Be sure to check size and dimension information when identifying each lamp.

To convert inches to millimeters, multiply the dimension (in inches) by 25.4 (i.e. 1.5" x 25.4 = 38.1 mm).

Lamp Locator

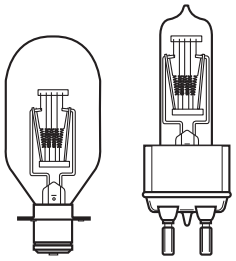

T12
Med Pf

T14
Med 2-Pin (G9.5)

Incandescent Lamps

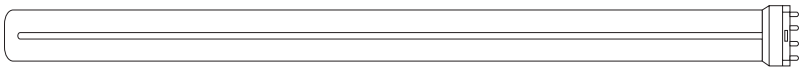

Biax®
2G11

Fluorescent Cinema Lamps

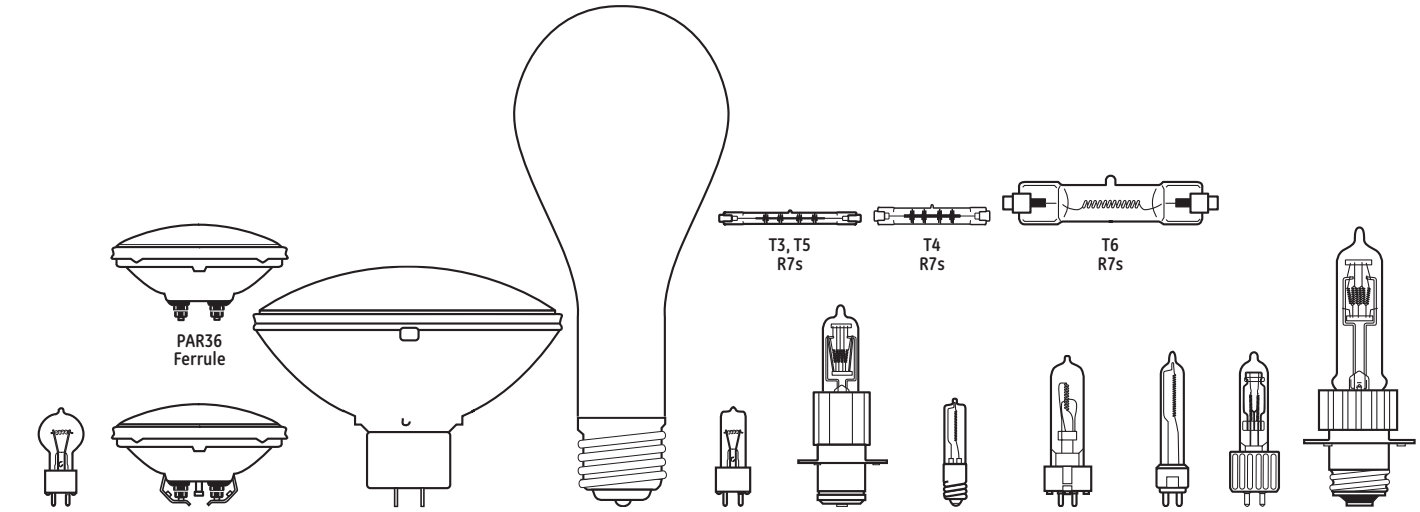

PAR36
Ferrule

T3, T5
R7s

T4
R7s

T6
R7s

G7
2-Pin Prefocus
(GX9.5 / GY9.5)

PAR36
Scrw Term

PAR64
Extended Mog End
Prefocus

PS52
Mog (E39)

T4, T6
Med 2-Pin
(G9.5)

T4, T6, T7, T8
Med Prefocus
(P28s)

T4
Mini-Cand

T5
2-Pin Prefocus
(GX9.5 / GY9.5)

T6
Med 2-Pin
(G9.5)

T6
Special

T7, T8, T10
Mog Prefocus
(P40s)

Quartzline® Tungsten Halogen

Lamp Locator (continued)

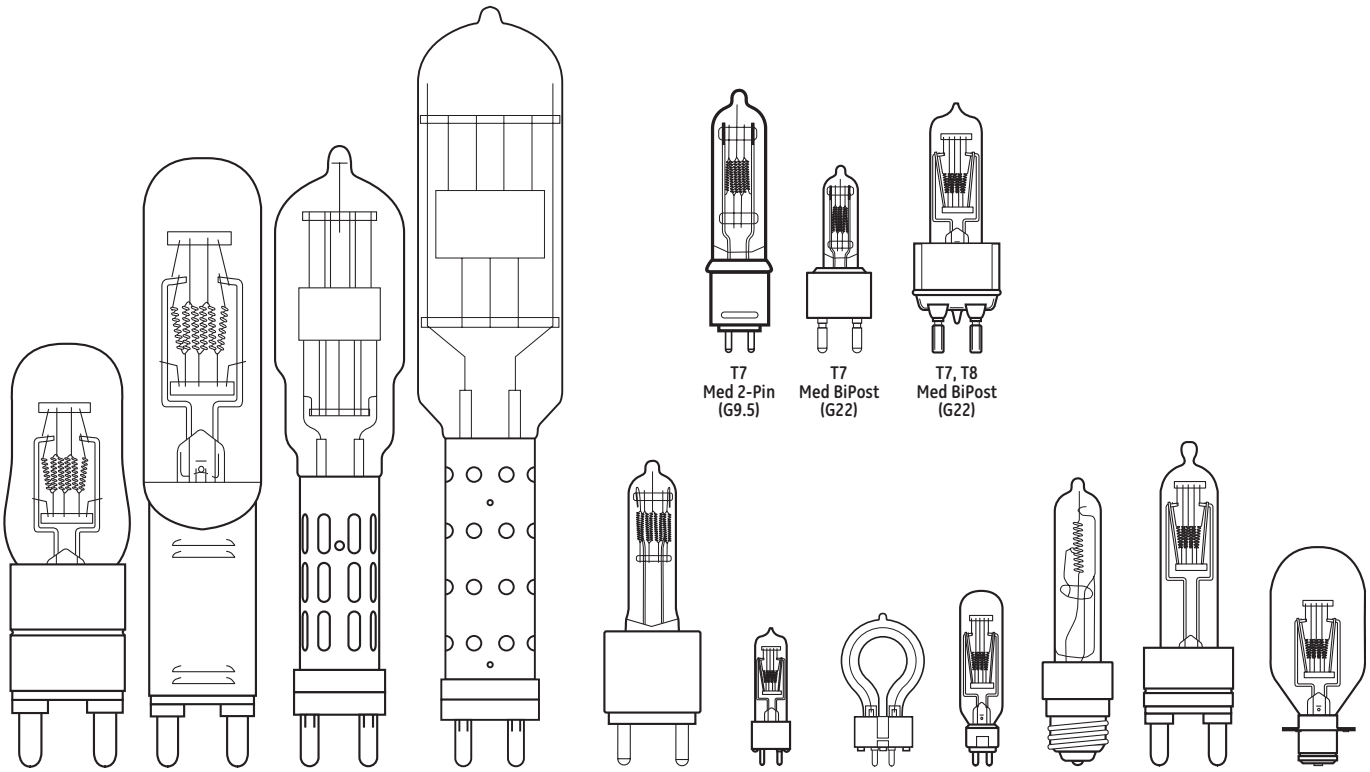

Quartzline® Tungsten Halogen (continued)

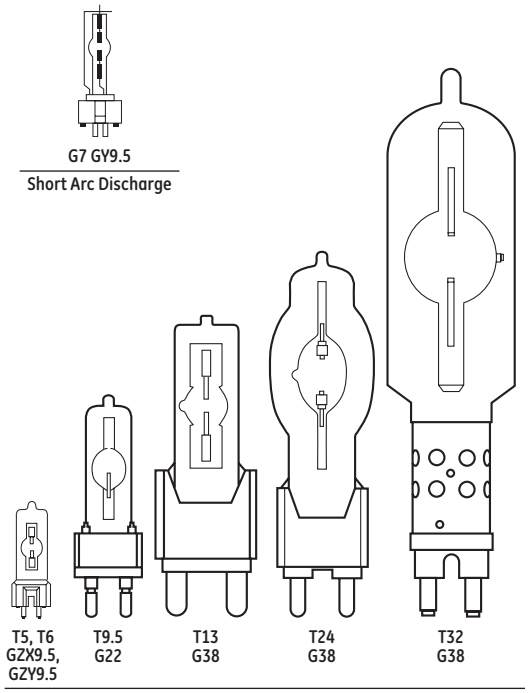

Single-Ended Hot Restrike

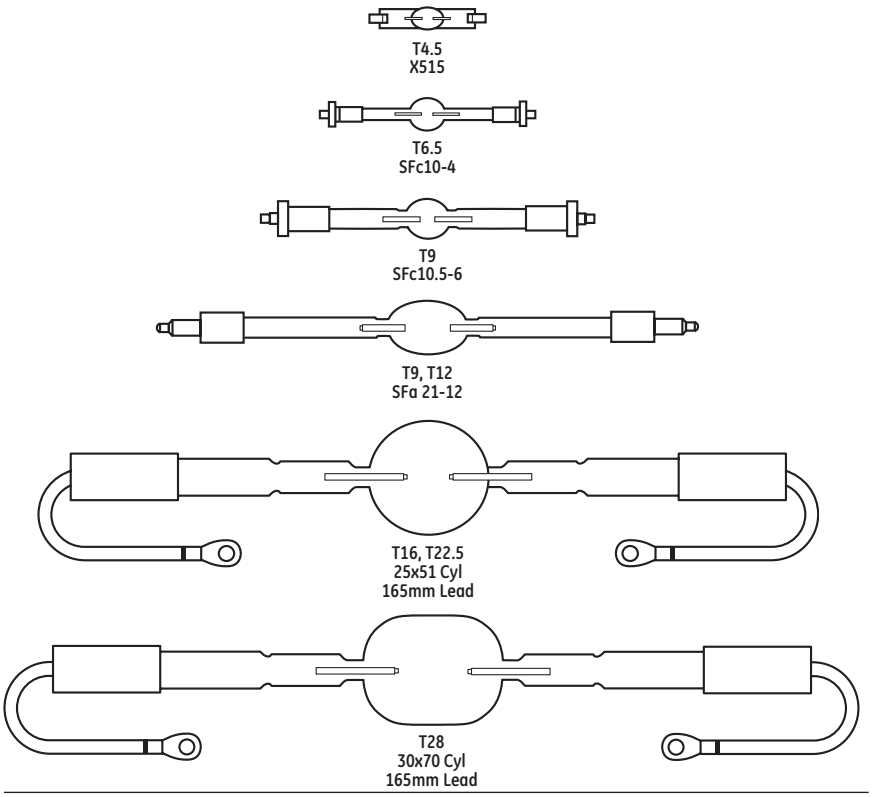

Double-Ended Hot Restrike

For the most up-to-date product information, see www.gelighting.com.

Lamp Locator (continued)

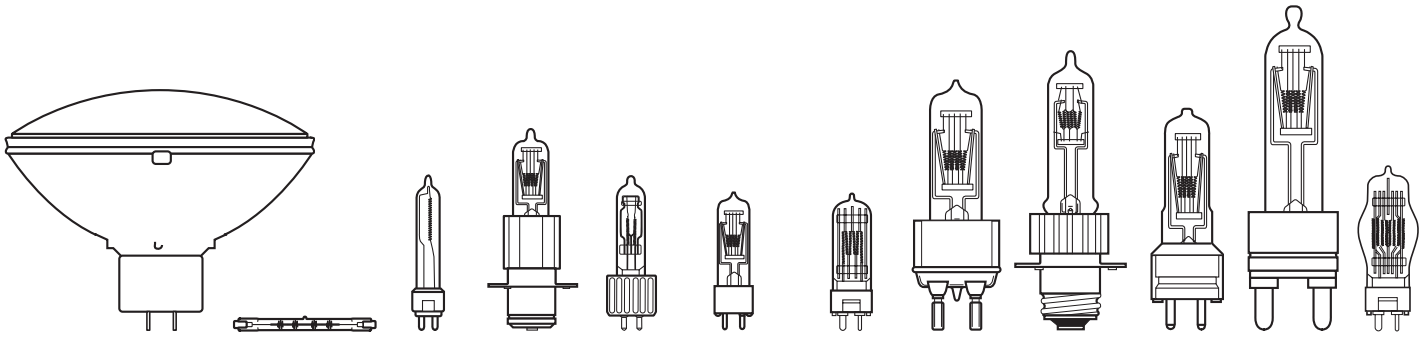

Quartzline® Tungsten Halogen High Voltage

Filament Identification

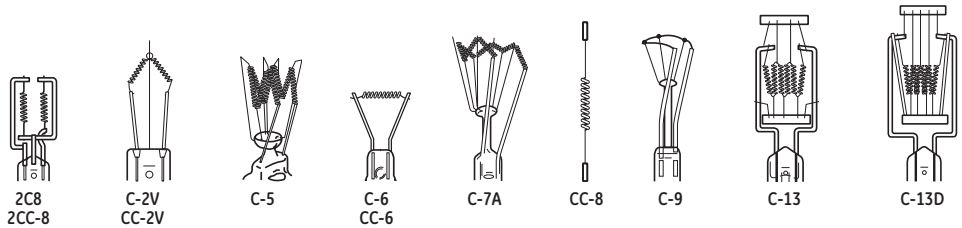

Base Identification

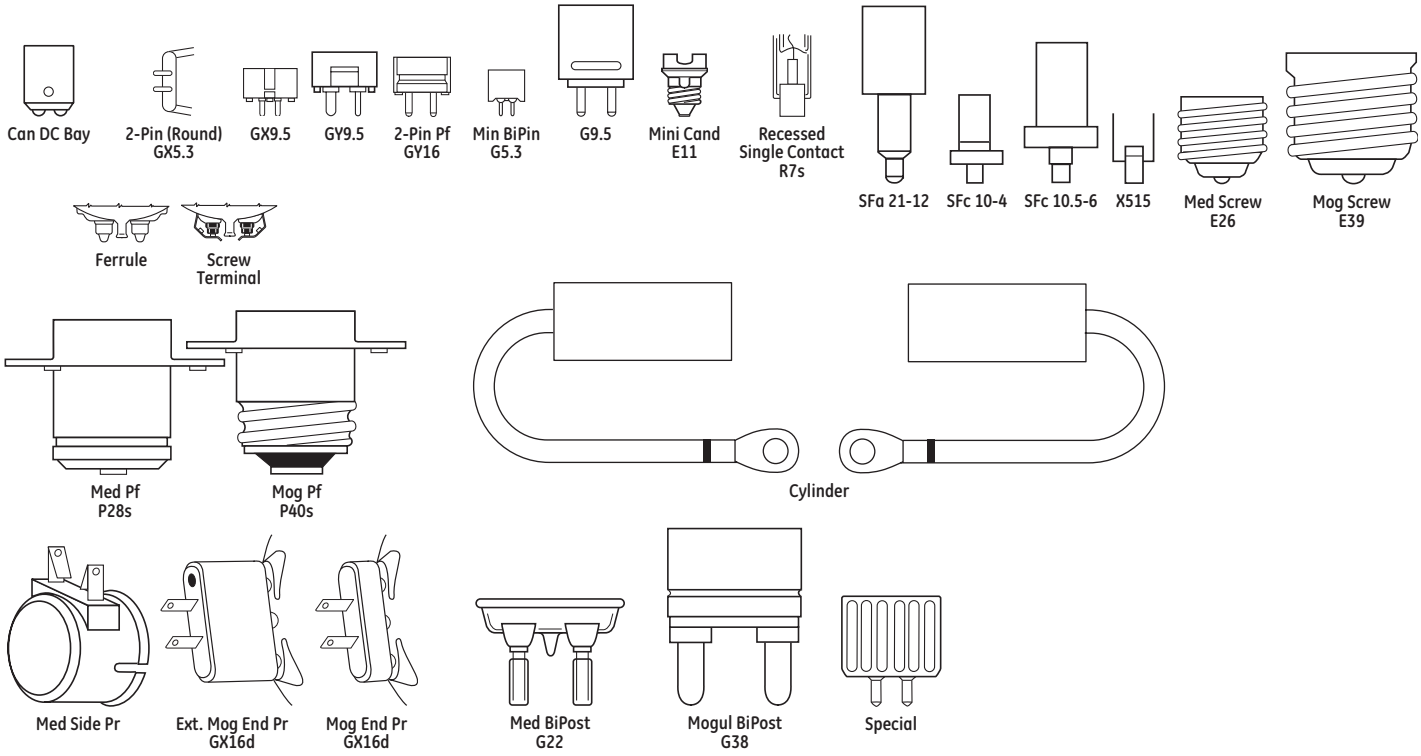

For the most up-to-date product information, see www.gelighting.com.

Introduction

GE has been a leading supplier to stage and studio users for many decades, and continues its pioneering work in the development of new and innovative light sources.

The primary change in recent years has been the migration from glass to quartz as the standard bulb material. The higher melting point of quartz enables bulb envelopes to be reduced in size and the halogen fillings to be run at higher pressures, leading to smaller, lighter, brighter, more energy-efficient and more reliable lamps.

GE's comprehensive range of single- and double-ended lamps is complemented by a group of PAR lamps, where the light source is enclosed in a sealed reflector unit.

The beam patterns of PAR lamps range from very narrow spot to wide-angle floods. This ensures consistency from lamp to lamp, interchangeability to suit the beam pattern needs of the moment and instant replaceability without the need to refocus and re-aim fixtures.

The sealed beam design prolongs the life of the inner lamp as well as protecting it from dust, vapor and other hazards, thereby ensuring high lumen maintenance over the life of the lamp.

PAR lamps may be used with very simple, lightweight, economical fixtures.

General Information

Operational Characteristics

Quartz halogen lamps are designed to be operated within close voltage tolerances, and excessive voltage can lead to drastically shortened life, albeit with significantly higher light output.

A second important variable is temperature. The tungsten halogen cycle does not operate properly below about 482°F (250°C) and quartz may begin to devitrify above about 1832°F (1000°C). Bulb envelopes should therefore be held in the range 482-1472°F (250-800°C).

The contact pins are plated to ensure good electrical connection with the lampholder. However, at temperatures above 350°C, the plating may lose adhesion, leading to deterioration in contact and possibly local hot spots, arcing and consequent irreparable damage to both lamp and holder. Note that if there is evidence that this has occurred, the lampholder should be replaced before the next lamp is fitted, otherwise it is likely to fail prematurely for the same reason.

Lamps normally fail by fusing of the filament. This is often followed by arcing, leading to very high currents which can cause the envelope and seals to fail and the lamp to shatter. A quick-acting, high-breaking capacity fuse should therefore be connected to the supply line in all applications. Suitable types are given in IEC 127, 241 and 269.

Chromised Seal Protection

Chromised seal protection for increased reliability.

Many Quartzline® Stage/Studio lamps have a special chromised seal protection, which allows lamp seal temperatures up to 500° C (vs traditional 350° C), which increases life and reliability.

If the package does not have this seal, lamp base temperatures for Quartzline® lamps should not exceed 350°C because, above that point, lead wires in the sealing area will deteriorate, and base cement can loosen, both causing premature lamp failure. Note overvoltaging a lamp will increase the seal heat.

Lamp Codes

GE Stage & Studio lamps are coded as such:

Lamp Description. This may be either an American National Standards Institute (ANSI) three-letter code such as EJG, or a descriptive code in the general form Q750T3/4CL. ANSI codes are assigned to lamp specifications—mechanical, electrical and photometric characteristics—filed with the Institute.

They ensure interchangeability among similarly coded lamps from different manufacturers. Most of these lamps are rated for 120-volt operation. In a few cases a pair of ANSI codes are given (e.g. BFL/BFK), where the first is the official code for the lamp and the second code describes lamps the specifications of which are met or exceeded. In such cases, the lamps may be used to replace lamps with either code.

Base designations conform to IEC standards.

Product Information

GE CSR/CSD Metal Halide Lamps

New GE range of metal halide lamps for use in a variety of applications including TV and film, stage, concerts, photographic and large-screen presentation and color simulation.

- Excellent color rendering Ra >90
- Daylight color temperature, typically 6000K
- Universal burning position
- High efficiency up to 100 Lm/Watt
- Hot restrike and dimmable with stable color temperature
- Superior color stability
- Excellent lumen maintenance
- Use with electronic or AC magnetic ballast/ignitor control gear
- Applications include inside and outside TV and film production, stage, concerts, sporting events, photographic studios, overhead and large-screen projection and color simulation.

GE Cinema Fluorescent Lamps

- High CRI (Color Rendering Index)...traditional fluorescent lamps have not been widely used in photography and film making because of relatively low CRI and the prominent green spike found in typical fluorescent phosphors. GE Lighting Cinema 32 and Cinema 55 lamps have corrected these deficiencies with products that now have a CRI of 95 (out of 100 max.) and colors that respond to the spectral sensitivity curves of film and electronic imaging media.
- Optional Shatter Resistance...GE Cinema 32 and 55 offer the option of GE's exclusive *covRguard*® shatter resistance that helps contain glass fragments if the lamps are broken. Reduce the possibility of glass-related injuries to irreplaceable talent, damage to expensive sets, contamination of delicate equipment or missing critical deadlines because GE offers shatter resistance. GE's covRguard® process wraps the Cinema lamps in a full 15-ml-thick casing of GE's exclusive Lexan® polycarbonate that helps contain the glass, phosphor and chemicals if the lamp is broken. Unlike some other shatter-resistant lamps, GE's covRguard® lamps require no assembly.

Product Information (continued)

- Superior Light Output...the GE covRguard® process offers maximum protection with minimal light loss...the lowest loss of initial light of other shielded products.
- Dependable UV Blocking...the GE covRguard® process also offers excellent UV blocking. CovRguard® blocks 98% of the UV that is normally transmitted from an unprotected fluorescent lamp—all UVC, all UVB and most of UVA. This is critical for protecting expensive sets and wardrobe from the fading effects of UV exposure.
- Chromaticity...the Cinema 32 has a chromaticity of X=.415 and Y=.377 with a CRI of 95. The Cinema 32 mixes well with both incandescent and quartz halogen light sources without color corrections. The Cinema 55 is a broad band spectrum daylight lamp with a chromaticity of X=.325 and Y=.321 and a CRI of 96. The Cinema 55 mixes well with ambient daylight and short arc discharge HID light sources without color corrections.

For more detailed information on all GE Stage and Studio lighting order "Showbiz®" 2008, PC 72475 from your GE sales representative.

Headings in this catalog section

The following terms and descriptions can help you when checking Stage/Studio lamp specifications and when ordering products. Within each product line, lamps are divided into families, within these families, lamps are then listed by wattage.

Watts: Energy used. To find actual energy used (kWh) multiply power (watts shown) x time divided by 1000.

Bulb Shape: Bulb shape followed by its size (the maximum diameter of the bulb expressed in eighths of an inch).

Base: The type of base (ANSI).

Volts: Lamp data is based on operation at rated voltage.

Order Code: It is important to use this five-digit code when ordering to ensure that you receive the exact product you require.

LIF Code: These are assigned by the Lighting Federation of London, U.K. They ensure electrical and mechanical interchangeability of similarly coded lamps. LIF codes are divided into groups according to the primary application of the lamps.

Description: The lamp's identification code.

ANSI Codes: These are 3-letter codes assigned by the American National Standards Institute. They provide a system of assuring mechanical and electrical interchangeability among similarly coded lamps from various manufacturers. General Electric uses the assigned ANSI Codes as Lamp Ordering Codes for most Projection Lamps.

Pack/Case Quantity: Number of product units packed in a pack or case.

Initial Lumens: Initial light output.

Approximate MBCP (Maximum Beam Candlepower): For reflector type lamps. Center Beam Candlepower is the intensity (candelas) at the center or maximum intensity of the beam.

Design Color Temperature – Kelvins (K): A measure of the visual "warmth" or "coolness" of the light from the lamp. The higher the value, the whiter or "cooler" the light appears.

Color Rendering Index (CRI): An indication of the ability of the lamp to render object colors in a normal, natural way. The higher the number (0-100), the better the color appearance.

Filament Type: Filaments are designated by a letter combination in which C is a coiled wire filament, CC is a coiled wire that is itself wound into a larger coil, and SR is a straight ribbon filament. Numbers represent the type of filament-support arrangement.

MOL (in): Maximum Overall Length in inches.

Light Center Length (LCL): This dimension defines the location of the filament in relation to the base. It is measured from the geometric center of the filament to a specified point on, or plane through, the base. Light Center Length is subject to manufacturing tolerances. Reference points/planes from which LCL is measured are tabulated on page 7-4 for the various styles of lamp bases.

Beam Spread: For reflector-type lamps. The total angle of the directed beam (in degrees) to where the intensity of the beam falls to 50% or 10% of the maximum value as indicated.

Rated Life – Hours: Lamp burning hours to rated life expectancy.

Footnotes and Safety Notices: See pg 7-11 for information.

Watts	Bulb Shape	Base	Volts	Order Code	LIF Code	Description	ANSI Codes	Pack Qty	Initial Lumens	MBCP	Design Color Temp K	CRI	CIE x	Color y	Arc Length (mm)	Filament Type	MOL (in)	LCL (in)	Beam Spread 50% H	Beam Spread 50% V	Rated Life (hrs)	Burning Position	Footnotes and Safety Notices
Quartzline® Tungsten Halogen																							
500	T6	Med Pf (P28s)	120	**11966**	T17	BTL-Q500 T6/CL/P		6	5500		3200					CC-2V	2.43	1.37			50		12

BTL- Q500 T6/CL/P

- BTL- : Identifies the lamp ANSI code.
- Q500 : Identifies the lamp's wattage. Q=Quartz Halogen
- T6/CL/P : Identifies the lamp shape and the bulb diameter in eighths of inches.

WHEN YOU DON'T KNOW THE LAMP DESCRIPTION

1. Identify bulb shape by using tables on page 7-2.
2. Measure bulb diameter using ruler in Appendix section page D-1 to determine width in eighths of an inch.
3. Identify base type using table on page 7-4.
4. Find your lamp in the table containing the bulb shape, size and base.

Watts	Bulb Shape	Base	Volts	Order Code	LIF Code	Description	ANSI Code	Pack Qty	Initial Lumens	Design Color Temp K	Rated Life (hrs)	Filament Type	MOL (in)	Burning Position	Footnotes and Safety Notices
Halogen Double-Ended															
300	T-3	R7s	120	43703		Q300T3/CL	EHM	6	5950	2950	2000	C-8	4.69	H4	62
500	T-3			23731		Q500T3/CL	FCL	12	11100	3000	2000	C-8	4.69	H4	62
				23744		Q500T3/CL/6		12	10950	2950	1500	C-8	4.69	H4	62
				23735	P2/30	FDF-Q500T3/4CL	FDF	12	13250	3200	400	C-8	4.69	H4	62
				23734	P2/31	FDN-Q500T3/4	FDN	12	12800	3200	400	C-8	4.69	H4	62,15
			130	23733		Q500T3/CL	DVS	12	10550	3000	2000	C-8	4.69	H4	62
650	T-4		120	30325	P2/6	FAD-Q650T4/4CL	FAD	24	16500	3200	100	CC-8	3.13	Any	62
750	T-3			23756	–	EJG-Q750T3/4CL	EJG	12	20600	3200	400	C-8	4.69	H4	62
				23755	–	EMD-Q750T3/4	EMD	12	19500	3200	400	C-8	4.69	H4	62,15
1000	T-5			30157		DXW-Q1000T5/4CL	DXW	24	28000	3200	150	CC-8	3.75	Any	62,27
				30374		FBY-Q1000T5/4	FBY	24	26000	3200	150	CC-8	3.75	Any	62,15
	T-6			33760		FER-Q1000T6/4CL	FER	6	27500	3200	500	CC-8	5.63	Any	62
	T-3			23797	P2/28	FCM-Q1000T3/4CL	FCM	12	28000	3200	400	C-8	4.69	H4	62
				23792	P2/29	FHM-Q1000/T3/4	FHM	12	27300	3200	400	C-8	4.69	H4	62,15,31
				33280	–	FFT-Q1000T3/1CL	FFT	12	26400	3200	400	C-8	6.56	H4	62
1500	T-4			23841	–	FDB-Q1500T4/4CL	FDB	12	41250	3200	400	C-8	6.56	H4	62
2000	T-10			88629	P2/27	FEY-Q2000T8/4CL	FEY	12	57000	3200	400	CC-8	5.63	H4	62
Halogen Single-Ended															
30	T-3.5	G5.3	10.8	37346		DZA	DZA	24	530	3100	400	C-6	2.00	BDTHCH	62
375	T-6	G9.5/Heat Sink	115	88540		HPL375/C 115V		12	10540	3250	300	4-C8	4.17	Any	62
				88539		HPL375/LL/C 115V		12	8000	3050	1000	4-C8	4.17	Any	62
500	T-6	G9.5	120	88624		EHD-Q500CL/TP	EHD	24	10,000	2900	2000	CC-8	4.13	Any	62
				88628		EHC-Q500/5CL	EHC	24	12,700	3150	500	CC-8	4.13	Any	62
	T-8	GY9.5		88467	CP82	FRG-Q500T8	FRG	24	13000	3200	150	C-13	3.54	BDTH	62
		G22		88509		EGN-Q500T8	EGN	12	13000	3200	150	C-13	5.51	BDTH	62
	T-6	P28s		88547	T17	BTL-Q500T6/CL/P	BTL	12	11000	3000	500	C-13	5.25	BDTH	62
				88546	–	BTM-Q500T6/4CL/2P	BTM	12	13000	3200	150	C-13	5.12	BDTH	62
	T-4	P28s		88617	–	EGE-Q500CL/P	EGE	12	10450	2950	2000	CC-8	6.00	Any	62
575	T-6	G9.5	115	88548		FLK-Q575T6	FLK	24	16500	3200	300	CC-8	4.13	Any	62
				88452		FLK/LL-Q575T6		24	12800	3100	1500	CC-8	4.13	Any	62
				88424		GLA-Q575T6/4CL	GLA	24	13000	3050	1500	C-13D	4.13	Any	62
				88423		GLC-Q575T6/5CL	GLC	24	14500	3200	300	C-13D	4.13	Any	62
		G9.5/Heat Sink		88438		HPL575/C 115V		12	16500	3200	300	4-C8	4.17	Any	62
				88435		HPL575/LL/C 115V		12	12360	3050	2000	4-C8	4.17	Any	62
			120	88436		HPL575/C 120V		12	16520	3200	300	4-C8	4.17	Any	62
				88434		HPL575/LL/C 120V		12	12360	3050	2000	4-C8	4.17	Any	62
600	G-7	GZ9.5	120	32955	A1/264	DYS/DYV/BHC	DYS	24	17000	3200	75	CC-6	2.50	BDTHCH	62
650	T-8	GY9.5		88462	CP89	FRK-Q650T8	FRK	24	16900	3200	200	C-13	3.54	BDTH	62
750	T-6	G9.5	115	88427		GLD-Q750T6/4CL	GLD	24	19000	3200	300	C-13D	4.13	Any	62
				88426		GLE-Q750T6/4CL	GLE	24	17400	3050	1500	C-13D	4.13	Any	62
		G9.5/Heat Sink		88437		HPL750/C 115V		12	22000	3200	300	4-C8	4.17	Any	62,7
				88428		HPL750/LL/C		12	16400	3050	2000	4-C8	4.17	Any	62,7
		G9.5	120	88626		EHG-Q750CL/TP	EHG	24	15000	3000	2000	CC-8	4.13	Any	62
				88627		EHF-Q750/4CL	EHF	24	20000	3200	300	CC-8	4.13	Any	62
	T-7	G22		88621		EGR-Q750T7/4CL	EGR	12	21000	3200	200	C-13D	5.00	BDTH	62,1
		P28s		88605	–	BTN-Q750T7/CL/2P	BTN	12	17600	3050	500	C-13D	4.75	BD30	62,1
				88606	–	BTP-Q750T7/4CL/2P	BTP	12	21000	3200	200	C-13D	4.75	BD30	62,1
	T-6	P28s		88619	–	EGG-Q750CL/P	EGG	12	15750	3000	2000	CC-8	6.00	Any	62
		G9.5/Heat Sink	230	88474		HPL750		12	19750	3200	300	6-C8	4.17	Any	62,7
1000	T-6	G9.5	120	88625	CP77	FEL-Q1000/4CL	FEL	24	27500	3200	300	CC-8	4.13	Any	62
	T-7	G22		88622		EGT-Q1000T7/4CL	EGT	12	28500	3200	250	C-13D	5.00	BDTH	62,1
		G38		88630		CYV-Q1000T7/4CL/BP	CYV	6	28500	3200	200	C-13D	8.00	BDTH	62,1
	PS-52	E39		39582	–	DKZ/DSE-Q1000PS52/4	DKZ	12	28000	3200	750	CC-8	13.00	Any	1,62,51
	ED-37	E39		19926		DSE/Q1000	DSE	10	28000	3200	750	CC-8	13.00	Any	1,62
	T-7	P28s		88607	–	BTR-Q1000T7/4CL/2P	BTR	12	28500	3200	250	C-13D	4.75	BD30	62,1
	T-6	P28s		88615	–	EGJ-Q1000/4/CL/P	EGJ	12	27500	3200	300	CC-8	6.00	Any	62
				88614	–	EGK-Q1000/4/P	EGK	12	26500	3200	300	CC-8	6.00	Any	62
	T-7	P40s		88608	–	BVT-Q1000T7/CL/MP	BVT	6	24500	3050	500	C-13D	7.25	BDTH	62,1
				88631	–	BVV-Q1000T7/4CL/MP	BVV	6	28500	3200	200	C-13D	7.25	BDTH	62,1

For the most up-to-date product information, see www.gelighting.com. To save energy costs, find the bulbs with the light output you need, then choose the one with the lowest watts. All footnotes and safety notices found at the end of this section (page 7-11).

Watts	Bulb Shape	Base	Volts	Order Code	LIF Code	Description	ANSI Code	Pack Qty	Initial Lumens	Design Color Temp K	Rated Life (hrs)	Filament Type	MOL (in)	Burning Position	Footnotes and Safety Notices
Halogen Single-Ended (continued)															
1500	T-10	G38	120	88612		CXZ-Q1500T10/4CL	CXZ	6	44500	3200	400	C-13	8.50	BDTH	62,1
	PS-52	E39		40357	–	DKX/DSF-Q1500PS52/4	DKX	12	41000	3200	1000	C-8	13.00	Any	1,62,51
2000	T-10	G38		88610		CYX-Q2000T10/4CL	CYX	6	59000	3200	350	C-13	8.50	BDTH	62,1
	T-8	E39		88611	–	BWF-Q2000/4CL	BWF	6	54000	3200	500	CC-8	7.50	Any	62
	T-10	P40s		88609	CP53	BVW-Q2000T10/4CL/MP	BVW	6	59000	3200	350	C-13	8.46	BDTH	62
5000	T-20	G38	120	41736	CP29	DPY-Q5000T20/4CL	DPY	6	143000	3200	500	C-13	11.00	BD45	62,1
				22959		HX5000		6	147000	3200	250	C-8	11.02	Any	62
10000	T-24	G38	120	24886	–	DTY-Q10M/T24/4CL	DTY	4	290000	3200	300	C-13	15.75	BD45	62,1
12000	T-26	GX38	120	48770		Q12MT26/4CL		1	420000	3400	150	C-13	16.13	BD45	62
			230	48771		Q12MT26/4CL		1	420000	3400	130	C-13	16.13	BD45	62
			240	48779		Q12MT26/4CL		1	420000	3400	130	C-13	16.13	BD45	62
20000	T-32	GX38	208	48772		BCM-Q20MT32/4CL	BCM	1	580000	3200	400	C-13	22.05	BD45	62
24000	T-32	GX38	230	48776		Q24MT32/4CL		1	800000	3400	150	C-13	22.05	BD45	62
			240	48777		Q24MT32/4CL		1	800000	3400	150	C-13	22.05	BD45	62

Watts	Bulb Shape	Base	Volts	Description	ANSI Code	LIF Code	Order Code	Pack Qty	MBCP	Design Color Temp K	Beam Spread 50%		MOL (in)	Rated Life (hrs)	Footnotes and Safety Notices
											H	V			
Halogen Sealed Beam															
500	PAR56	Mog End Pr	120	Q500PAR56NSP			43494	6	96000	2950	13	8	5	4000	63
			120	Q500PAR56MFL			43495	6	43000	2950	26	10	5	4000	63
			120	Q500PAR56WFL			43496	6	19000	2950	44	20	5	4000	63
	PAR64	ExMogEndPr	120	500PAR64/NSP			39406	12	110000	2800	12	7	6	2000	64
			120	500PAR64/MFL			39409	12	37000	2800	23	11	6	2000	64
			120	500PAR64/WFL			39412	12	13000	2800	42	20	6	2000	64
		MogEndPr	230	500PAR64/MFL			39411	12		2700	21	10	6	2000	64
			230	500PAR64/WFL			39414	12		2700	42	20	6	2000	64
650	PAR36	Ferrule	120	FAY-Q650PAR36/3D	FAY		41668	12	36000	5000	25	15	2.75	30	63
			120	FCW-Q650PAR36/6	FCW		41672	12	9000	3200	60	55	2.75	100	63
			120	FCX-Q650PAR36/7	FCX		41673	12	24000	3200	40	30	2.75	100	63
		Screw Terminals	120	DWE-Q650PAR36/1	DWE		41667	12	24000	3200	40	30	2.75	100	63
			120	FBE-Q650PAR36/5D	FBE		41669	12	36000	5000	25	15	2.75	30	63
			120	FBO-Q650PAR36/5	FBO		41671	12	67000	3400	25	15	2.75	30	63
1000	PAR64	ExMogEndPr	120	FFN-Q1000PAR64/1	FFN		13233	6	400000	3200	12	6	6	800	63
			120	FFP-Q1000PAR64/2	FFP		13229	6	330000	3200	14	7	6	800	63
			120	FFR-Q1000PAR64/5	FFR		13228	6	125000	3200	28	12	6	800	63
			120	FFS-Q1000PAR64/6	FFS		13227	6	40000	3200	48	24	6	800	63
			120	Q1000PAR64NSP			43497	6	200000	3000	15	8	6	4000	63
			120	Q1000PAR64MFL			43498	6	80000	3000	28	12	6	4000	63
			120	Q1000PAR64/WFL			43499	6	33000	3000	48	24	6	4000	63
1200	PAR64	ExMogEndPr	120	GFC-Q1200PAR64/1	GFC		88487	6	540000	3200	8	10	6	400	63

For the most up-to-date product information, see www.gelighting.com. To save energy costs, find the bulbs with the light output you need, then choose the one with the lowest watts. All footnotes and safety notices found at the end of this section (page 7-11).

CSR Metal Halide Lamps

Watts	Bulb Shape	Base	Volts	Description	Order Code	Pack Qty	Initial Lumens	Design Color Temp K	CRI	CIE x	Color y	Arc Length (mm)	Rated Life (hrs)	LCL (in)	MOL (in)	Burning Position	Footnotes and Safety Notices
Discharge-CSR/CSD (Daylight) Metal Halide Single-Ended Cold Start																	
300		PGJX28	95	CSR300/2/TAL	76160	4	23000	7800	75+			5	750	2.64	4.96	Any	14,63
575	T9	GX9.5	97	CSR575/2/SE	15378	10	46000	7200	65+	0.302	0.320	7	1000	2.56	4.92	Any	14,63
700	T9	G22	70	CSR700/2/SE	49491	10	55000	7200	70+	0.312	0.325	7.5	1000	2.95	6.10	Any	14,63
1200	T12	G22	100	CSR1200/2/SE	49490	6	110000	7200	75+	0.305	0.315	10	800	3.35	6.90	Any	14,63
1500		PGJX50	100	CSR1500/TAL/60/S	74873	4	135000	6000	85+			5	750	2.56	5.12	Any	14,63
Discharge-CSR (Daylight) Metal Halide, Single-Ended Short Arc																	
700	G7	GY9.5	70	CSR700/SA	15380	10	58000	5600	70+	0.330	0.342	4.3	500	1.53	3.35	Any	14,63
1200	G8	GY22	100	CSR1200/SA	21849	6	96000	5600	75+	0.326	0.330	7.5	750	2.32	5.31	Any	14,63
Discharge-CSR (Daylight) Metal Halide, Single-Ended Hot Restrike																	
125	T5	GZX9.5	80	CSR125/SE/HR	48461	10	9400	5600	90+	0.323	0.328	4	200	1.53	2.95	Any	14,63
12000	T32	G38	160	CSR12000/SE/HR	48468	4	1100000	6000	90+	0.323	0.328	28	250	10.04	17.72	Any	14,63
18000	T32	G51	225	CSR18000/SE/HR	22496	1	1650000	6000	90+	0.323	0.328	35	250	10.04	18.00	Any	14,63
Discharge-CSR (Daylight) Metal Halide, Double-Ended Hot Restrike																	
200	T4.5	X515	80	CSR200/DE	48450	10	16000	6000	90+	0.323	0.325	8	300		2.95	H15	14,63
575	T6.5	SFc 10-4 Sl/M4	95	CSR575/S/DE/70	70979	10	40000	7000	75+	0.307	0.309	7	750		5.43	Any	14,63
			100	CSR575/SS/DE/75	45231	10	44000	7500	70+	0.297	0.312	5	500		3.62	Any	14,63
700	T6.5		70	CSR700/S/DE/72	41357	10	59000	7200	75+	0.322	0.332	4	750		5.43	Any	14,63
1200	T6.5		100	CSR1200/S/DE/60	22494	10	110000	6000	90+	0.323	0.325	7	500		5.43	Any	14,63
1500	T6.5		115	CSR1500/S/DE/60	96800	10	135000	6000	85+	0.326	0.334	7	750		5.43	Any	14,63
4000	T12	Sfa21-12	200	CSR4000/DE	48455	6	410000	6000	90+	0.323	0.325	34	500		15.94	H15	14,63
18000	T28	30x70 Cyl 165mm	225	CSR18000/DE	48459	4	1650000	6000	90+	0.323	0.325	45	300		19.68	H15	14,63
Discharge-CSR (Daylight) Metal Halide, Single-Ended Hot Restrike UV Control																	
200	T6	GZY9.5	70	CSR200/SE/HR/UVC	48462	10	15000	5600	90+	0.323	0.328	5	200	1.53	3.15	Any	14,63
400	T7	GZZ9.5	70	CSR400/SE/HR/UVC	21853	10	32000	6000	85+	0.323	0.320	6.5	750	2.38	4.32	Any	14,63
575	T9.5	G22	95	CSR575/SE/HR/UVC	40460	10	49000	5600	80+	0.330	0.325	7	750		5.71	Any	14,63
800	T9.5	G22	95	CSR800/SE/HR/UVC	22495	10	64000	5600	90+	0.325	0.327	7	1000		5.71	Any	14,63
1200	T13	G38	100	CSR1200/SE/HR/UVC	27764	6	110000	5600	90+	0.333	0.333	10	750		7.87	Any	14,63
1800		G38	140	CSR1800/SE/HR/UVC	77390	4	165000	6000	90+	0.333	0.333	12	750		7.87	Any	14,63
2500	T19.5	G38	115	CSR2500/SE/HR/UVC	40482	6	220000	5600	90+	0.330	0.325	14	500		9.45	Any	14,63
4000	T24	G38	200	CSR4000/SE/HR/UVC	27765	6	380000	5600	90+	0.330	0.325	24	500		10.24	Any	14,63
6000	T26.5	G38	130	CSR6000/SE/HR/UVC	40492	6	540000	5600	90+	0.333	0.333	26	300		14.17	Any	14,63
9000	T26.5	G38	160	CSR9000/SE/HR	65852	6	875000	5800	90+	0.333	0.333	26	250		14.17	Any	14,63
12000	T32	G38	160	CSR12000/SE/HR/UVC	97272	4	1100000	6000	90+	0.323	0.328	28	250	18.04	17.72	Any	14.63

Watts	Bulb Shape	Base	Footnotes and Safety Notices	Order Code	Description	Case Qty	Lumens Initial	Design Color Temp K	MOL (in)	Rated Life (hrs)	CRI	Burning Position
Fluorescent Cinema Lighting												
Cinema Biax®												
55	T5	2G11-4 PIN	171	41869	F55BX/STUDIOBIAX32	10	4100	3200	21.10	8000	86	Any
			171	41873	F55BX/STUDIOBIAX56	10	4100	5600	21.10	8000	86	Any
			171	41903	F55BX/CINPLUS/32	10	2400	3200	21.10	2000	86	Any
			171	41911	F55BX/CINPLUS/56	10	2400	5600	21.10	2000	86	Any

ANSI Codes

ANSI Code	Order Code	Volts	Lamp Description
BCM	48772	208	BCM-Q20MT32/4CL
BCM	48773	230	BCM-Q20MT32/4CL
BCM	48774	240	BCM-Q20MT32/4CL
BTL	11966	120	BTL-Q500T6/CL/P
BTM	16465	120	BTM-Q500T6/4CL/2P
BTN	11953	120	BTN-Q750T7/CL/2P
BTP	11954	120	BTP-Q750T7/4CL/2P
BTR	11955	120	BTR-Q1000T7/4CL/2P
BVT	12554	120	BVT-Q1000T7/CL/MP
BVV	12553	120	BVV-Q1000T7/4CL/MP
BVW	12555	120	BVW-Q2000T10/4CL/MP
BWA	39587	120	BWA-Q2000/4CL/BP
BWF	37086	120	BWF-Q2000/4CL
CXZ	37564	120	CXZ-Q1500T10/4CL
CYV	42697	120	CYV-Q1000T7/4CL/BP
CYX	36636	120	CYX-Q2000T10/4CL
DKX	40357	120	DKX/DSF-Q1500PS52/4
DKZ	39582	120	DKZ/DSE-Q1000PS52/4
DPY	41736	120	DPY-Q5000T20/4CL
DSE	19926	120	DSE/Q1000
DSF	19927	120	DSF/Q1500
DTY	24886	120	DTY-Q10M/T24/4CL
DVS	23733	130	Q500T3/CL
DWE	41667	120	DWE-Q650PAR36/1

ANSI Code	Order Code	Volts	Lamp Description
DXW	30157	120	DXW-Q1000T5/4CL
DYS	32955	120	DYS/DYV/BHC
DZA	37346	10.8	DZA
EGE	39135	120	EGE-Q500CL/P
EGG	39137	120	EGG-Q750CL/P
EGJ	38853	120	EGJ-Q1000/4/CL/P
EGK	38852	120	EGK-Q1000/4/P
EGN	30373	120	EGN-Q500T8
EGR	39190	120	EGR-Q750T7/4CL
EGT	39191	120	EGT-Q1000T7/4CL
EHC	39789	120	EHC-Q500/5CL
EHD	39768	120	EHD-Q500CL/TP
EHF	39771	120	EHF-Q750/4CL
EHG	39770	120	EHG-Q750CL/TP
EHM	43703	120	Q300T3/CL
EJG	23756	120	EJG-Q750T3/4CL
EKB	33934	120	EKB-Q420/4CL/2PP
EMD	23755	120	EMD-Q750T3/4
FAD	30325	120	FAD-Q650T4/4CL
FAY	41668	120	FAY-Q650PAR36/3D
FBE	41669	120	FBE-Q650PAR36/5D
FBO	41671	120	FBO-Q650PAR36/5
FBY	30374	120	FBY-Q1000T5/4
FCL	23731	120	Q500T3/CL

ANSI Code	Order Code	Volts	Lamp Description
FCM	23797	120	FCM-Q1000T3/4CL
FCW	41672	120	FCW-Q650PAR36/6
FCX	41673	120	FCX-Q650PAR36/7
FDB	23841	120	FDB-Q1500T4/4CL
FDF	23735	120	FDF-Q500T3/4CL
FDN	23734	120	FDN-Q500T3/4
FEL	39769	120	FEL-Q1000/4CL
FER	33760	120	FER-Q1000T6/4CL
FEY	39790	120	FEY-Q2000T8/4CL
FFN	13233	120	FFN-Q1000PAR64/1
FFP	13229	120	FFP-Q1000PAR64/2
FFR	13228	120	FFR-Q1000PAR64/5
FFS	13227	120	FFS-Q1000PAR64/6
FFT	33280	120	FFT-Q1000T3/1CL
FHM	23792	120	FHM-Q1000/T3/4
FLK	11450	115	FLK-Q575T6
FRG	39623	120	FRG-Q500T8
FRK	39637	120	FRK-Q650T8
GFC	34808	120	GFC-Q1200PAR64/1
GLA	93428	115	GLA-Q575T6/4CL
GLC	93429	115	GLC-Q575T6/5CL
GLD	92771	115	GLD-Q750T6/4CL
GLE	92773	115	GLE-Q750T6/4CL

For the most up-to-date product information, see www.gelighting.com. To save energy costs, find the bulbs with the light output you need, then choose the one with the lowest watts. All footnotes and safety notices found at the end of this section (page 7-11).

Footnotes and Safety Notices

1 Filament with low noise construction.

2 New Product Code. See cross reference for previous code.

7 Pinned base to secure correct application.

14 Enclosed fixture only, per UL Standard 1572. In accordance to Federal Regulations (21CFR1040.30) the following notice applies:

WARNING: This lamp can cause serious skin burn and eye inflammation if the outer envelope is broken or punctured, and the arc tube continues to operate. Do not use where people will remain more than a few minutes unless adequate shielding or other safety precautions are used. Certain types of lamps that will automatically extinguish when the outer envelope is broken or punctured are commercially available.

15 Apparent lighted length slightly longer than similar clear lamp.

27 Has blackening collector grid on only one side of filament. Unless burned base down, install lamp so grid is above filament.

31 GE lamp is 240 volt; 250 volt lamp specified for Colortran.

51 Silica coated.

52 Rough service. 6 filament supports.

55 Burn BDTH, but avoid horizontal burning with support spine beneath filament to prevent premature arcing.

62 Safety Notice for exposed unshielded lamps (if shielded fixture use footnote 63)

⚠ Warning

Risk of electrical shock

- Turn power off before inspection, installation or removal

Risk of fire

- Keep combustible materials away from lamp
- Use in enclosed fixture rated for this product

Pressurized lamp—unexpected rupture may cause injury, fire, or property damage

- Use eye protection when handling lamp
- Do not touch glass with bare hands
- Use in enclosed fixtures rated for this product
- Do not use lamp if outer glass is scratched or broken
- Operate lamp only in specified position
- Do not exceed 110% of rated voltage

⚠ Caution

Risk of burn

- Allow lamp/fixture to cool before handling
- Turn power off before installing lamp

Lamp may shatter and cause injury if broken

- Do not use lamp if outer glass is scratched or broken
- Dispose of lamp in a closed container
- Wear safety glasses and gloves when handling lamp

Lamp emits UV radiation which may cause eye/skin irritation. RG-2.

- Limit unshielded exposure to less than 15 minutes per day

63 Safety Notice for PAR lamps and enclosed, shielded lamps

⚠ Warning

Risk of electrical shock

- Turn power off before inspection, installation or removal

Risk of fire

- Keep combustible materials away from lamp
- Use in fixture rated for this product

A damaged lamp emits UV radiation which may cause eye/skin injury

- Turn power off if glass is broken. Remove and dispose of lamp

Pressurized lamp—unexpected rupture may cause injury, fire, or property damage

- Use in enclosed fixtures rated for this product
- Do not use lamp if outer glass is scratched or broken
- Do not exceed 110% of rated voltage
- Avoid direct water/liquid contact

⚠ Caution

Risk of burn

- Allow lamp/fixture to cool before handling
- Turn power off before installing lamp

Lamp may shatter and cause injury if broken

- Do not use lamp if outer glass is scratched or broken
- Dispose of lamp in a closed container

64 High Wattage Incandescent Par Lamps

⚠ Warning

Risk of electrical shock

- Turn power off before inspection, installation, or removal

Risk of fire

- Keep combustible materials away from lamp

Unexpected lamp rupture may cause injury, fire, or property damage

- Avoid direct water/liquid contact
- Use in enclosed fixtures rated for this product

Burning Position Key

H4	operate horizontally +-4 degrees
H15	operate horizontally +-15 degrees
BDTH	operate base down to horizontal
BDTHCH	operate base down to horizontal with filament coil axis horizontal
ANYCH	base in any position, but with filament coil axis horizontal
BD30	base down +-30 degrees
BD45	base down +-45 degrees

Notes

Miniature, Sealed Beam and Automotive Lamps

GE LIGHTING: INNOVATING TECHNOLOGY

A revolutionary advance from a leader in automotive lighting.

Every technological advance we make is backed by our global reputation as a trusted partner, and an unwavering commitment to the customers we serve. With a wide variety of quality options, you can be sure that there is a GE Automotive lighting product for everything on wheels.

imagination at work

GE HAS THE RIGHT LIGHT FOR YOUR VEHICLE

Product Product Producto	Feature Feature Características	Benefit Benefit Beneficios	Miniatures Miniatures Miniaturas	Sealed Beam Faisceau étanche Haz sellado	Fog Feu de brouillard Faro antiniebla	Halogen Composite Composite Halogène Compuestos Halógenos
GE NIGHTHAWK™ LED	Superior LED technology Superior technologie LED Superior tecnología LED	Bright, white light that's virtually maintenance-free Lumineux, lumière blanche et pratiquement sans entretien Luz blanca brillante que es virtualmente libre de mantenimiento		✓		
GE NIGHTHAWK™ Xenon	HID caliber performance and style HID performance de calibre et de style HID calidad rendimiento y estilo	Exceptional visibility Une visibilité exceptionnelle Visibilidad excepcional				✓
GE NIGHTHAWK™ Platinum	Up to 90% more light* Jusqu'à 90% de lumière en plus* Hasta un 90% más de luz*	Better visibility during night time driving Une meilleure visibilité en conduite de nuit Una mejor visibilidad durante la noche conducción				✓
GE NIGHTHAWK™ Sport	Crisp, blue-white light Croustillant, bleu-blanc lumineux Crespo, luz blanca azulada	Increased contrast provides improved visibility Augmentation du contraste fournit une meilleure visibilité Mayor contraste para una mayor visibilidad		✓		✓
GE NIGHTHAWK™	Up to 50% more light* Jusqu'à 50% de lumière en plus* Hasta un 50% más de luz*	Improved visibility during night time driving Visibilité améliorée pendant la nuit lors de la conduite Mejora de la visibilidad durante la noche conducción	✓	✓	✓	✓
Long Life	2-6x the life of a standard** 2-6x plus longue durée de vie** Ya 2-6x vida**	Save time and money, less maintenance Économisez du temps et de l'argent, moins de maintenance Ahorre tiempo y dinero, menor mantenimiento	✓	✓		✓
Standard	High quality OE value Haute qualité OE valeur OE valor Alta calidad	Dependable performance Performances fiables Rendimiento fiable	✓	✓	✓	✓

*GE NIGHTHAWK™ halogen lamps focus more light in an area illuminated with more than 15,000 candelas in light intensity compared to a standard halogen headlamp bulb. Specific light levels vary by bulb type and headlamp assembly. See page 8-14 for illustration.
**Long Life lamps last up to 2-6x longer when compared to standard GE halogen lamps.

REVOLUTIONARY HEADLIGHT PERFORMANCE

GE NIGHTHAWK™ XENON:
Get closer to the look and feel of HID lighting without the cost or hassle of conversion.

Few things attract an auto enthusiast's gaze like the cutting-edge look of HID headlamps. That is, until they see the high cost of conversion. Now there's a revolutionary solution that delivers performance and style close to HID-caliber lighting at a fraction of the cost: GE NIGHTHAWK™ XENON headlamps.

up to 120% more light*

bright white light

breakthrough performance

exceptional visibility

GE NIGHTHAWK™ PLATINUM:
High performance lamps for visibility, convenience and style.

No matter the nighttime driving conditions, GE NIGHTHAWK™ PLATINUM headlamps give you a better chance of seeing – and reacting to – what's ahead of you. The bottom line is: with more light on the road, you'll have more peace of mind.

up to 90% more light*

improved reaction time

greater visibility

THE RIGHT LIGHT

FOR NEARLY EVERYTHING ON WHEELS

Feature / Benefit	GE NIGHTHAWK™ LED: 15,000 HOUR LAMP	GE NIGHTHAWK™ XENON: UP TO 120% MORE LIGHT**	GE NIGHTHAWK™ PLATINUM: UP TO 90% MORE LIGHT**	GE NIGHTHAWK™ SPORT: UP TO 50% MORE LIGHT**
	3 yr warranty*	up to 120% more light*	up to 90% more light*	up to 50% more light*
	bright white light	bright white light	improved reaction time	more visibility
	exceptional visibility	breakthrough performance	greater visibility	blue white color
		exceptional visibility		
Available in:	LED 7" RND, LED 200 RECT, LED 4.5" RND	9003, 9005, 9006, 9007, H1, H4, H7, H11	9003, 9004, 9005, 9006, 9007, H1, H4, H7, H11, H13	9003, 9004, 9005, 9006, 9007, H7, H13, H4656, H4666, H6024, H6054

*GE NIGHTHAWK™ halogen lamps focus more light in an area illuminated with more than 15,000 candelas in light intensity compared to a standard halogen headlamp bulb. Specific light levels vary by bulb type and headlamp assembly. See page 8-14 for illustration.

For the most up-to-date product information, see www.gelighting.com.

Miniature, Sealed Beam and Automotive Lamps

GE NIGHTHAWK™: UP TO 50% MORE LIGHT**	LONG LIFE: 2-6X LONGER LIFE**	STANDARD	HID	
up to 50% more light* improved reaction time more visibility	OEM quality 2-6X longer life* less time on maintenance	smart value OEM quality meets DOT requirements	exceptional visibility lasting performance white light	Feature / Benefit
9003, 9004, 9005, 9006, 9007, H1, H4, H7, H13, H4656, H4666, H6024, H6054	9003, 9004, 9005, 9006, 9007, H1, H7, H11, H5024, H5051, H5054, H5062	9003, 9004, 9005, 9006, 9007, 9008, H1, H3, H4, H7, H9, H11, H4656, H4666, H6024, H6054	D1S, D2R, D2S, D2S BLUE	Available in:

*GE NIGHTHAWK™ halogen lamps focus more light in an area illuminated with more than 15,000 candelas in light intensity compared to a standard halogen headlamp bulb. Specific light levels vary by bulb type and headlamp assembly. See page 8-14 for illustration.
**Long Life lamps last up to 2-6x longer when compared to standard GE halogen lamps.

North American Vehicles
Véhicules d'Amérique du Nord
Vehículos Norteamericanos

FRONT VIEW
VUE DE FACE
VISTA FRONTAL

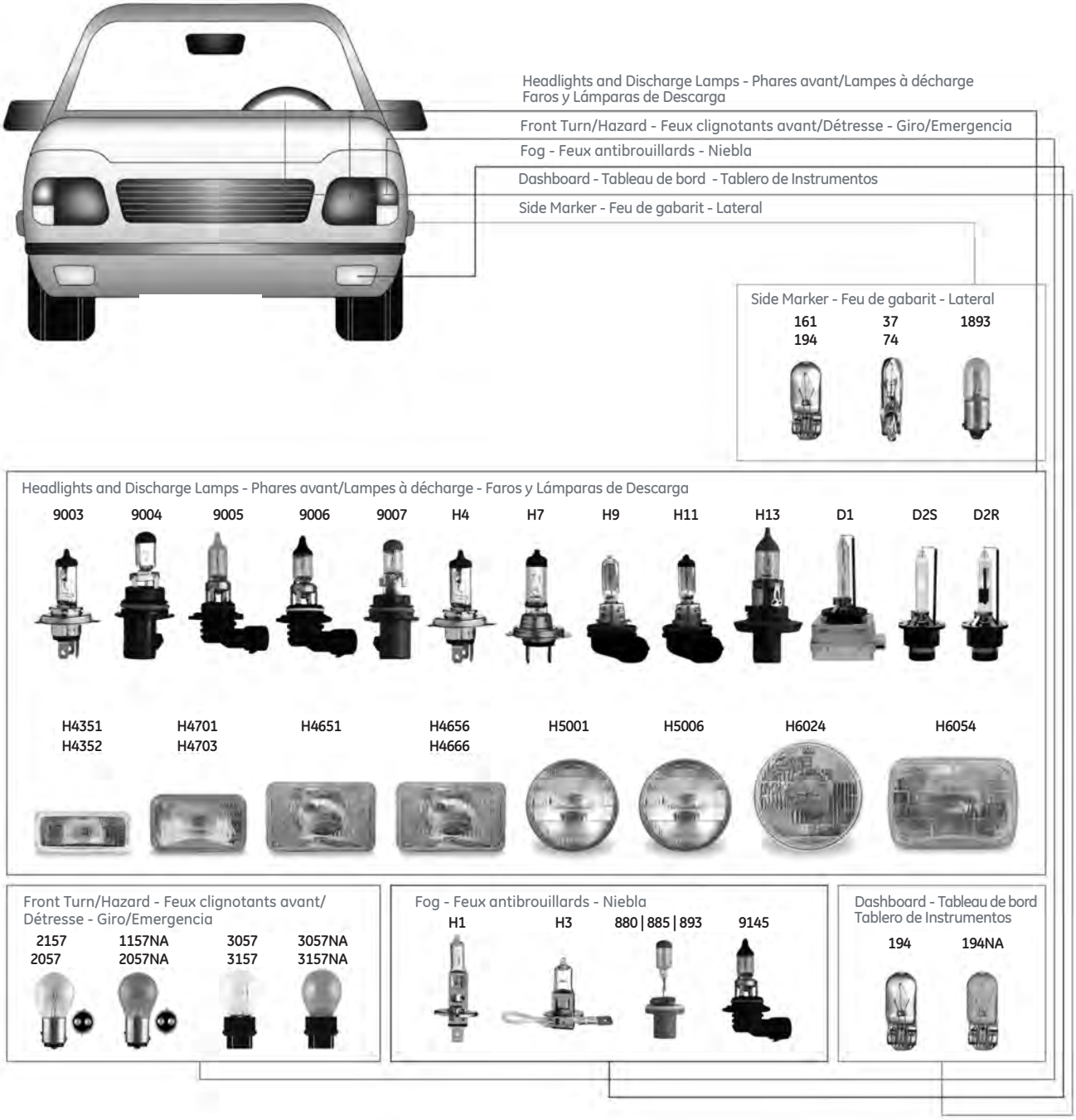

REAR VIEW
VUE DE DOS
VISTA POSTERIOR

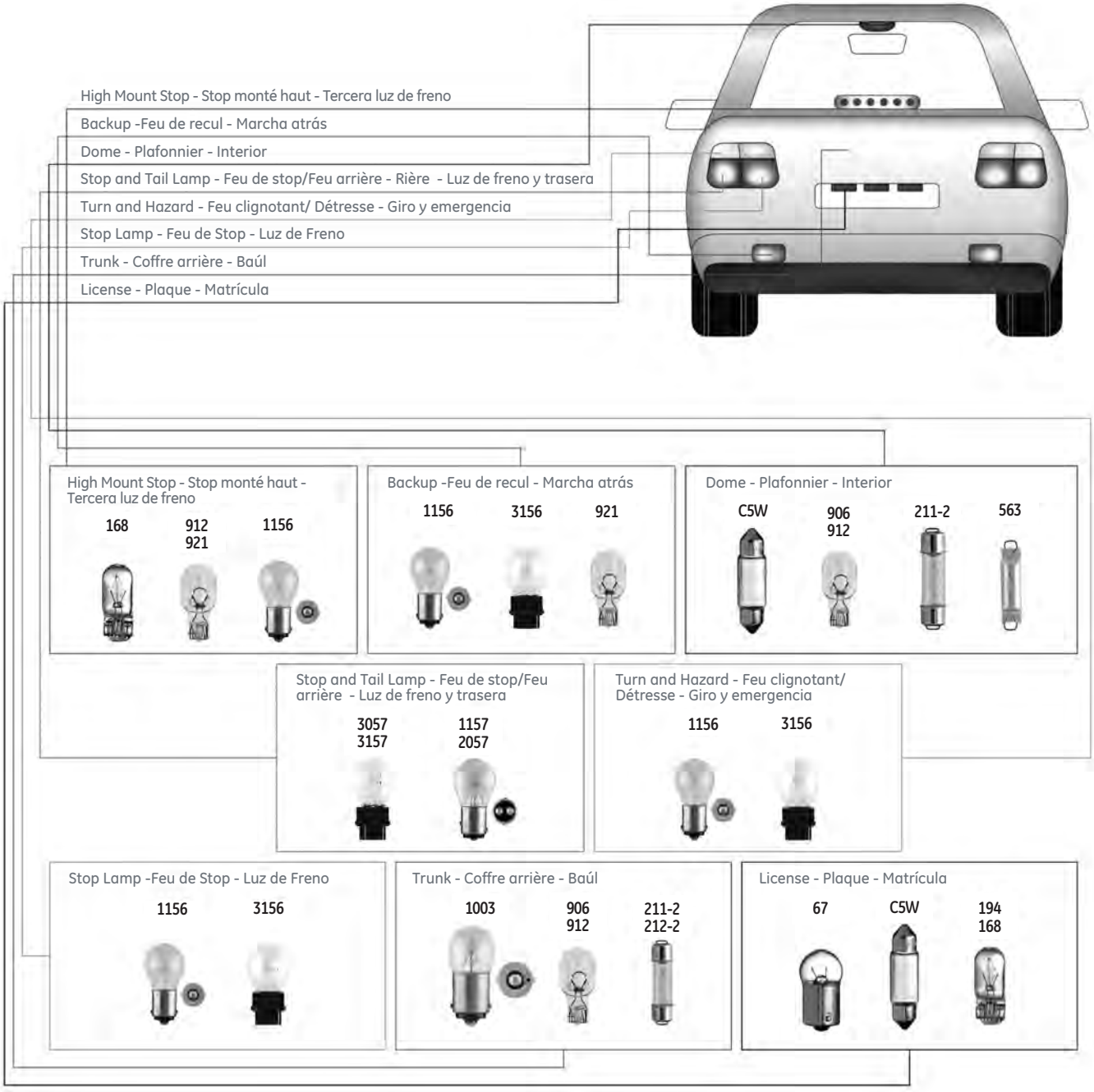

GE NIGHTHAWK™ Automotive Lighting
Éclairage Autmobile GE NIGHTHAWK™
Illuminación para automóviles GE NIGHTHAWK™

GE NIGHTHAWK LED™: 15,000 Hour Lamp

Product Code	Lamp Description	Direct Replacement For	Color	Meets DOT Requirements	Lamps/ Card	Cards/ Inner	Cards/ Master
69821	NH LED 7" RND	6012, 6014, 6015, 6016, 6017, H5024, H6024	5600K	✓	1	6	24
69822	NH LED 200 RECT	6052, 6053, H5054, H6054	5600K	✓	1	6	24
69823	NH LED 4.5" RND	Coming 2014	5600K	✓	1	6	24

GE NIGHTHAWK™ XENON: Up to 120% More Light†

Product Code	Lamp Description	Lamps/ Card	Cards/ Inner	Cards/ Master
69861	9003 NHX/BP2	2	3	12
69862	9005 NHX/BP2	2	3	12
69863	9006 NHX/BP2	2	3	12
69864	9007 NHX/BP2	2	3	12
69857	H1 NHX/BP2	2	3	12
69858	H4 NHX/BP2	2	3	12
69860	H7 NHX/BP2	2	3	12
69865	H11 NHX/BP2	2	3	12

GE NIGHTHAWK™ PLATINUM: Up to 90% More Light††

Product Code	Lamp Description	Lamps/ Card	Cards/ Inner	Cards/ Master
75814	9003NHP/BP2	2	3	12
75815	9004NHP/BP2	2	3	12
75816	9005NHP/BP2	2	3	12
75817	9006NHP/BP2	2	3	12
75818	9007NHP/BP2	2	3	12
78134	H1-55NHP/BP2	2	3	12
75820	H4-60NHP/BP2	2	3	12
75821	H7-55NHP/BP2	2	3	12
62267	H11-55NHP/BP2	2	3	12
62430	H13NHP/BP2	2	3	12

†GE NIGHTHAWK™ XENON headlamps focus up to 120% more light on the road - flux projected to area with more than 15,000 candelas in light intensity compared to a standard halogen headlamp bulb. Specific light levels vary by bulb type and headlamp assembly.
††GE NIGHTHAWK™ PLATINUM headlamps focus up to 90% more light on the road - flux projected to area with more than 15,000 candelas in light intensity compared to a standard halogen headlamp bulb. Specific light levels vary by bulb type and headlamp assembly.

GE NIGHTHAWK SPORT™: Up to 50% More Light‡

Product Code	Lamp Description	Lamps/ Card	Cards/ Inner	Cards/ Master
89139	9003NHS/BP	1	3	24
66004	9003NHS/BP2	2	3	12
97698	9004NHS/BP	1	3	24
97699	9004NHS/BP2	2	3	12
89140	9005NHS/BP	1	3	24
66005	9005NHS/BP2	2	3	12
97700	9006NHS/BP	1	3	24
97701	9006NHS/BP2	2	3	12
97696	9007NHS/BP	1	3	24
97697	9007NHS/BP2	2	3	12
89141	H7-55NHS/BP	1	3	24
66006	H7-55NHS/BP2	2	3	12
78654	H13NHS/BP2	2	3	12
97695	H4656NHS	1	-	6
97694	H4666NHS	1	-	6
97693	H6024NHS	1	-	6
97692	H6054NHS	1	-	6

GE NIGHTHAWK™ Composite Headlamps: Up to 50% More Light on the Road‡‡

Product Code	Lamp Description	Lamps/ Card	Cards/ Inner	Cards/ Master
25150	9003NH/BP	1	3	24
25107	9003NH/BP2	2	3	12
25149	9004NH/BP	1	3	24
25106	9004NH/BP2	2	3	12
25148	9005NH/BP	1	3	24
25105	9005NH/BP2	2	3	12
25147	9006NH/BP	1	3	24
25104	9006NH/BP2	2	3	12
25146	9007NH/BP	1	3	24
25103	9007NH/BP2	2	3	12
25159	H1-55NH/BP	1	3	24
25092	H1-55NH/BP2	2	3	12
25094	H4-60NH/BP1	1	3	24
25095	H7-55NH/BP2	2	3	12
25160	H7-55NH/BP	1	3	24
78653	H13NH/BP2	2	3	12

GE NIGHTHAWK™ Fog Lamps: Up to 30% More Light on the Road‡‡

Product Code	Lamp Description	Lamps/ Card	Cards/ Inner	Cards/ Master
25163	880NH/BP	1	3	24
25101	880NH/BP2	2	3	12
25172	893NH/BP	1	3	24
25102	893NH/BP2	2	3	12

GE NIGHTHAWK™ Sealed Beam Headlamps: Up to 30% More Light on the Road‡‡

Product Code	Lamp Description	Lamps/ Card	Cards/ Inner	Cards/ Master
25098	H4656NH	1	-	6
28157	H4666NH	1	-	6
28153	H6024NH	1	-	6
25097	H6054NH	1	-	6

‡GE NIGHTHAWK™ SPORT halogen lamps focus up to 50% more light in an area illuminated with more than 15,000 candelas in light intensity compared to a standard halogen headlamp bulb.
‡‡These GE NIGHTHAWK™ lamps focus 30%-50% more light in an area illuminated with more than 15,000 candelas in light intensity compared to a standard halogen headlamp bulb. Specific light levels vary by bulb type and headlamp assembly. See page 8-14 for light distribution illustration.

Long Life and Discharge Automotive Lighting
Long Life et Éclairage Automobile de Décharge
Illuminación para Automóviles Long Life y Descarga

Long Life Headlamps: 2-6X Longer Life**

Product Code	Lamp Description	Lamps/ Card	Cards/ Inner	Cards/ Master
78935	9003LL/BP	1	6	48
13993	9004LL/BP	1	6	48
45866	9005XSLL/BP	1	6	48
45868	9006XSLL/BP	1	6	48
78639	9007LL/BP	1	6	48
12777	H1-LL	1	-	300
78640	H7-55LL/BP	1	6	48
89255	H11-55LL/BP	1	6	48
19428	H5024	1	-	6
19411	H5051	1	-	6
19429	H5054	1	-	6
19412	H5062	1	-	6

HID

Ordering information

Description	Characteristic	Watts	Color Temperature	Packaging	Product Code
D1S Unit	HID projection beam	35	4200K	1/4/12 box	78734
D2R Unit	HID reflector beam	35	4000K	1/6/24 box	80851
D2R Bulk	HID reflector beam	35	4000K	144 bulk	46911
D2S Unit	HID projection beam	35	4200K	1/6/24 box	25088
D2S Bulk	HID projection beam	35	4200K	144 bulk	48504
D2S Blue	Off road only - no highway use	35	5100K	1/32 box	90057

**Long Life lamps last up to 2-6x longer when compared to standard GE halogen lamps.

Standard Headlamps

Product Code	Lamp Description	Lamps/ Card	Cards/ Inner	Cards/ Master
22389	9003	1	-	100
22432	9003/BP	1	6	48
72252	9003/BP2	2	-	4
13382	9004	1	-	100
18508	9004/BP	1	6	48
14604	9004/BP2	2	-	6
13384	9005	1	-	100
18509	9005/BP	1	6	48
13397	9006	1	-	100
18510	9006/BP	1	6	48
25135	9006/BP2	2	-	4
20551	9007	1	-	100
22388	9007/BP	1	6	48
25136	9007/BP2	2	-	4
71342	9008 (H13)/BP	1	6	48
40843	9145/BP	1	6	48
40336	H1-55/BP	1	6	48
12339	H3-55/BP	1	6	48
12341	H3-100/BP	1	6	48
27334	H4-60/55	1	-	10
18132	H4-60/55/BP	1	6	48
89256	H4-60MS/BP	1	3	24
26374	H7-55/BP	1	6	48
29047	H8-35W BP	1	6	48
29049	H9-65W BP	1	6	48
23762	H11-55/BP	1	6	48
18533	H4656	1	-	6
18535	H4666	1	-	6
18525	H6024	1	-	6
18534	H6054	1	-	6

Standard Fog Lamps

Product Code	Lamp Description
12320	880/BP
12334	881/BP
12335	885/BP
14689	886/BP
12336	889/BP
12337	890/BP
12308	891/BP
12338	893/BP

Product Code	Lamp Description
22112	894/BP
22113	896/BP
98093	898/BP
22111	899/BP
40843	9145/BP
40336	H1-55/BP
12339	H3-55/BP
12341	H3-100/BP

Heavy Duty Truck Automotive Lighting
Éclairage Automobile de Camions
Illuminación de Alto Rendimiento para Camiones

GE NIGHTHAWK LED™: 15,000 Hour Lamp

Product Code	Lamp Description	Direct Replacement For	Color	Meets DOT Requirements	Lamps/ Card	Cards/ Inner	Cards/ Master
69821	NH LED 7" RND	6012, 6014, 6015, 6016, 6017, H5024, H6024	5600K	✓	1	6	24
69822	NH LED 200 RECT	6052, 6053, H5054, H6054	5600K	✓	1	6	24
69823	NH LED 4.5" RND	Coming 2014	5600K	✓	1	6	24

Long Life Headlamps: 2-6X Longer Life**

Product Code	Lamp Description	Lamps/ Card	Cards/ Inner	Cards/ Master
78935	9003LL/BP	1	6	48
13993	9004LL/BP	1	6	48
45866	9005XSLL/BP	1	6	48
45868	9006XSLL/BP	1	6	48
78639	9007LL/BP	1	6	48
12777	H1-LL	1	-	300
78640	H7-55LL/BP	1	6	48
89255	H11-55LL/BP	1	6	48
19411	H5051	1	-	6
19412	H5062	1	-	6
19428	H5024	1	-	6
19429	H5054	1	-	6

**Long Life lamps last up to 2-6x longer when compared to standard GE halogen lamps.

Standard Replacement Sealed Beam Lamps

Product Code	Lamp Description	Product Code	Lamp Description	Product Code	Lamp Description
18511	4000	25114	6006	18525	H6024
24448	4411	18519	6014	28153	H6024NH*
24454	4412	38416	6015	18534	H6054
24460	4412A	18521	6052	14752	H6054HO◊
24478	4414	22386	H4351	25097	H6054NH*
22982	4415	22387	H4352	43576	H7604
24499	4415A	18532	H4656	49695	H7612
24539	4421	14753	H4656HO◊	45058	H7621-1
24572	4434A	18535	H4666	13426	H7921-1
18517	4651	28157	H4666NH*	16484	H9415
18518	4652	18536	H4701	17988	H9415A
24973	4800	18538	H4703	16976	H9420
45110	4912-1	18522	H5001	16482	H9421
45116	4921-1	18523	H5006		

Standard Replacement Headlamps

Product Code	Lamp Description	Product Code	Lamp Description	Product Code	Lamp Description
22432	9003/BP	45866	9005XSLL/BP	27342	H4-75/70
25150	9003NH/BP*	18510	9006/BP	26374	H7-55/BP
18508	9004/BP	25147	9006NH/BP*	29049	H9 65W BP
25149	9004NH/BP*	45868	9006XSLL/BP	23762	H11-55/BP
18509	9005/BP	22388	9007/BP	80851	D2R UNIT
25148	9005NH/BP*	25146	9007NH/BP*	25088	D2S UNIT
		27334	H4-60/55	78734	D1S UNIT

GE NIGHTHAWK™ PLATINUM

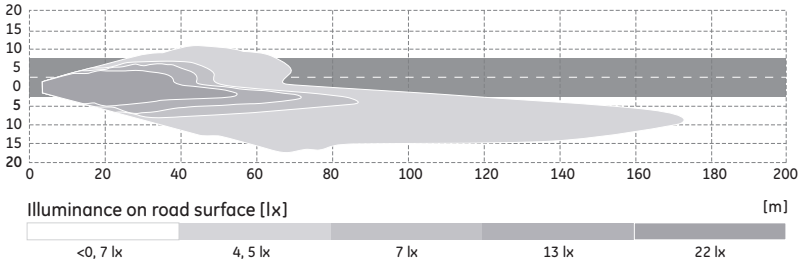

* GE NIGHTHAWK™ halogen lamps focus more light in an area illuminated with more than 15,000 candelas in light intensity compared to a standard halogen headlamp bulb. Specific light levels vary by bulb type and headlamp assembly.

◊ High Output headlamps offer increased light output over standard halogen.

Assortment Architecture Matrix
Assortiment D'ampoules
Surtido De Arquitectura De Matriz

HID Discharge • HID Décharge • HID Descarga

Bulb Type Type d'ampoule Tipo de Lápara	Projection Beam Faisceau de projection Proyección del Haz	Reflector Beam Réflecteur Reflector de Haz	Off Road Only - No Highway Hors route uniquement - Pas sur route Sólo Off Road - Momentos de Peligro
D1S	D1S	-	-
D2R	-	D2R	-
D2S	D2S	-	D2SBlue & D2S Superblue

Halogen Composite • Halogéne Composit • Halógeno Compuesto

Bulb Type Type D'ampoule Tipo De Lápara	Long Life La Fiabilité Fiabilidad	GE NIGHTHAWK™	GE NIGHTHAWK™ SPORT	GE NIGHTHAWK™ PLATINUM	GE NIGHTHAWK™ XENON
9003	9003LL	903NH	9003NHS	9003NHP	9003NHX
9004	9004LL	9004NH	9004NHS	9004NHP	_
9005	9005LL	9005NH	9005NHS	9005NHP	9005NHX
9006	9006LL	9006NH	9006NHS	9006NHP	9006NHX
9007	9007LL	9007NH	9007NHS	9007NHP	9007NHX
9005XS	9005XSLL	-	-	-	-
9006XS	9006XSLL	-	-	-	-
H1-55	-	H1-55NH	-	H1-55NHP	H1-55NHX
H4-60	-	H4-60NH	-	H4-60NHP	H4-60NHX
H7-55	H7-55LL	H7-55NH	H7-55NHS	H7-55NHP	H7-55NHX
H11-55	H11-55LL	H11-55NH	H11-55NHS	H11-55NHP	H11-55NHX
H13 (9008)	_	H13NH	H13NHS	H13NHP	_

Halogen Sealed Beam • Halogéne Faisceau Scelle • Halógeno Sellado Rayo

Bulb Type Type D'ampoule Tipo De Lápara	Long Life La Fiabilité Fiabilidad	GE NIGHTHAWK™	GE NIGHTHAWK™ SPORT
H4656, H4656LL, H4740, 4652, HP4656	H4656LL	H4656NH	H4656NHS
H6054, H6054LL, H6059, 6052, 6053, HP6054, H5054	H6054LL	H6054NH	H6054NHS
H4666 HP4666, H6545, HP6545	-	H4666NH	H4666NHS
H6024, H6026LL, 6014, 6015, 6016	H6024LL	H6024NH	H6024NHS
4651, H4651, H5051?	H5051	-	-
4652, H4656, H4662, 4739, H5062?, H5024?	H5062	-	-
6012, 6014, 6015, 6016, 6017, H6024, H6026	H5024	-	-
6052, 6053, H6054	H5054	-	-

Assortment Architecture Matrix
Assortiment D'ampoules
Surtido De Arquitectura De Matriz

Miniature • Miniature • Miniatura

Lamp	Standard OEM Standard OEM Estándar OEM		Long Life La fiabilité Fiabilidad		GE NIGHTHAWK™		Popular Applications
	Product Code	Lamp Description	Product Code	Lamp Description	Product Code	Lamp Description	
67	25652	67	-	-	71895	67 NH/BP2	License, Cargo • Plaque, Cargo • Licencia, de Carga
89	12363	89/BP2	47797	89LL/BP2	-	-	Instrument, License, Step/Courtesy, Underhood • Instrument, Plaque, Pied/Courtoisie, Sous le Capot • Instrumento, de Licencia, Paso/Coresía, Debajo del Capó
93	25811	93	-	-	71904	93 NH/BP2	Underhood, Backup • Sous le Capot, Backup • Bajo el Capó, de Copia de Seguridad
161	23016	161/BP2	-	-	71902	161 NH/BP2	Instrument • Instrument • Instrumento
168	12327	168/BP2	47827	168LL/BP2	89239	168NH/BP2	License, Courtesy, Map, Cargo, High Mount Stop • Plaque de Courtoisie, Carte, Cargo, Haute Arrétez le Mont • Licencia, de Cortesía, Mapa, de Cargo, Alta Detener el Monte
194	12328	194/BP2	25832	194LL/BP2	89240	194NH/BP2	Instrument, License, Dome, Sidemarker • Instrument, Licnce, Dome, Sidemarker • Instrumento, Licencia, Cúpula, Sidemarker
194NA	12319	194NA/BP2	47794	194NA/LL/BP2	71894	194NA NH/BP2	Front Sidemarker • Sidemarker Avant • Sidemarker Frente
211-2	12673	211-2/BP2	-	-	71900	211-2 NH/BP2	Cargo, Trunk, Dome • Cargo, Tranc, Dome • De Carga, del Tranco, la Cúpula
912	12365	912/BP2	-	-	89242	912NH/BP2	Dome, High Mount Stop, Cargo • Dome, Butée Haute Montagne, Cargo • Dome, Parada de Alta Montaña, de Carga
921	12307	921/BP2	-	-	89238	921NH/BP2	Backup, High Mount Stop, Cargo • Sauvegarde, Butée Haute Montagne, Cargo • Copia de Seguridad, Parada de Alta Montaña, de Carga
922	23027	922/BP2	-	-	71903	922 NH/BP2	High Mount Stop, Courtesy • Butée Haute Montagne, Courtoisie • Parada de Alta Montaña, Cortesía
1003	12367	1003/BP2	47800	1003LL/BP2	-	-	License, Underhood • Plaque, Sous le Capot • Licencia, Debajo del Capó
1073	26838	1073	-	-	71905	1073 NH/BP2	Directional, Stop and Backup • Directionnel, Stop et de Sauvegarde • Deje de Dirección y Copia de Seguridad
1141	12346	1141/BP2	47802	1141LL/BP2	71897	1141 NH/BP2	Directional, Stop and Backup • Directionnel, Stop et de Sauvegarde • Deje de Dirección y Copia de Seguridad
1154	12297	1154/BP2	-	-	71889	1154NH/BP2	Directional, Stop and Tail Lamp • Directionnel, Stop et de Sauvegarde, et Feux Arrié • Deje de Dirección, Copia de Seguridad, Luces Traseras
1156	12344	1156/BP2	23334	1156LL/BP2	89241	1156NH/BP2	Directional, Stop and Backup • Directionnel, Stop et de Sauvegarde • Deje de Dirección y Copia de Seguridad
1157	12294	1157/BP2	23337	1157LL/BP2	89236	1157NH/BP2	Directional, Stop and Tail Lamp • Directionnel, Stop et de Sauvegarde, et Feux Arrié • Deje de Dirección, Copia de Seguridad, Luces Traseras
1157NA	12310	1157NA/BP2	47798	1157NALL/BP2	71891	1157NA NH/BP2	Directional, Parking Lamp • Directionnel, Feu de Stationnement • Direccionales, Luz de Estacionamiento
1895	12330	1895/BP2	-	-	71896	1895 NH/BP2	Instrument, Sidemarker • Instrument, Sidemarker • Instrumento, Sidemarker
2057	12296	2057/BP2	23339	2057 LL/BP2	89237	2057NH/BP2	Directional, Stop and Tail Lamp • Directionnel, Stop et de Sauvegarde, et Feux Arrié • Deje de Dirección, Copia de Seguridad, Luces Traseras
2057NA	12312	2057NA/BP2	47799	2057NALL/BP2	71892	2057NA NH/BP2	Directional, Parking Lamp • Directionnel, Feu de Stationnement • Direccionales, Luz de Estacionamiento
2357	12298	2357/BP2	-	-	71890	2357NH/BP2	Directional, Stop and Tail Lamp • Directionnel, Stop et de Sauvegarde, et Feux Arrié • Deje de Dirección, Copia de Seguridad, Luces Traseras
3057	12305	3057/BP2	26378	3057LL/BP2	89243	3057NH/BP2	Directional, Stop and Tail Lamp • Directionnel, Stop et de Sauvegarde, et Feux Arrié • Deje de Dirección, Copia de Seguridad, Luces Traseras
3156	12351	3156/BP2	27565	3156LL/BP2	71898	3156 NH/BP2	Backup, Cornering, Directional • Directionnel, Sauvegarde, les Virages • Copia de Seguridad, en Curvas, Direccional
3157	12306	3157/BP2	26377	3157LL/BP2	89244	3157NH/BP2	Directional, Stop and Tail Lamp • Directionnel, Stop et de Sauvegarde, et Feux Arrié • Deje de Dirección, Copia de Seguridad, Luces Traseras
3157NA	12314	3157NA/BP2	26380	3157NA/LL/BP2	71893	3157NA NH/BP2	Directional, Parking Lamp • Directionnel, Feu de Stationnement, Avant Sidemarker • Direccionales, Luz de Estacionamiento, Frente Sidemarker
3457	14387	3457/BP2	26379	3457/LL/BP2	71901	3457 NH/BP2	Directional, Stop and Tail Lamp • Directionnel, Stop et de Sauvegarde, et Feux Arrié • Deje de Dirección, Copia de Seguridad, Luces Traseras
4157			15657	4157LL/BP2	-	-	Directional, Stop and Tail Lamp • Directionnel, Stop et de Sauvegarde, et Feux Arrié • Deje de Dirección, Copia de Seguridad, Luces Traseras
4157NA	-	-	47458	4157NA/LL/BP2	-	-	Directional, Parking Lamp • Directionnel, Feu de Stationnement • Direccionales, Luz de Estacionamiento
7443	26201	7443/BP2	-	-	89248	7443NH/BP2	Directional, Stop and Tail Lamp • Directionnel, Stop et de Sauvegarde, et Feux Arrié • Deje de Dirección, Copia de Seguridad, Luces Traseras
DE3175	12354	DE3175/BP2	-	-	89245	DE3175NH/BP2	Dome, Courtesy • Dome, Courtoisie • Dome, Cortesía
P21W	23306	P21W/BP2	-	-	89247	P21W NH/BP2	Directional, Stop and Backup • Directionnel, Stop et de Sauvegarde • Deje de Dirección y Copia de Seguridad
P21/5W	23303	P21/5W/BP2	-	-	89246	P21/5W NH/BP2	Directional, Stop and Tail Lamp • Directionnel, Stop et de Sauvegarde, et Feux Arrié • Deje de Dirección, Copia de Seguridad, Luces Traseras

Cross Reference Tables
Tableau de Renvoi
Referencias Cruzadas

Headlamps
Phares - Raros

GE	OSRAM	PHILIPS	WAGNER
H1-55	H1	H1-55W	1255/H1
H7-55	H7	H7-55W	1255/H7
H9-65	H9W	H9-65W	1265/H9
H11-55	H11	H11	1255/H11
H13	H13 (9008)	H13 (9008)	9008
4000	4000	4000	4000
4001	5001	5001	5001
4040	4040	4040	4040
H4351	H4351	H4351	H4351
H4352	H4352	H4352	H4352
4651	4651	4651	4651
H4651	H4651	H4651	H4651
H4651	H4651	H4651	HP4651
4652	4652	4652	4652
H4656	H4656	H4656	H4656
H4656	H4656	H4656	HP4656
H4666	H4666	H4666	H6545
H4666	H4666	H4666	HP6545
H4701	H4701	H4701	H4701
H4703	H4703	H4703	H4703
H5001	H5001	H5001	H5001
H5006	H5006	H5006	H5006
H5024	-	H6017LL	H6024LL
H5054	H6054LL	H6054LL	H6054LL
6006	6006	6006	6006
6014	6014	6014	6014
6015	6015	6015	6015
H6024	H6024	H6017	H6024
6052	6052	6052	6052
H6054	H6054	H6054	H6054
H6054	H6054	H6054	HP6054
9003	9003	9003	9003
9004	9004	9004	9004
9004LL	9004LL	9004LL	9004LL
9005	9005	9005	9005
9005LL	9005	9005LL	9005LL
9005XSLL	9005XS	9005XS	9005XS
9005XSLL	9005XS	9005XSLL	9005XS
9006	9006	9006	9006
9006HO	9006LL	9006LL	9006LL
9006XSLL	9006XS	9006XS	9006XS
9006XSLL	9006XS	9006XSLL	9006XSLL
9007	9007	9007	9007
9007LL	9007LL	9007LL	9007LL
9011	-	9011	9011
9012	-	-	-

Miniature Lamps
Ampoules Miniatures -Lámparas En Miniatura

GE	OSRAM	PHILIPS	WAGNER
12	12	12	12
24	24	24	24
24NA	24NA	24NA	24NA
37	37	37	37
53	53	53	53
57	57	57	57
67	67	67	67
68	68	68	68
70	70	70	70
73	73	73	73
74	74	74	74
89	89	89	89
90	90	90	90
93	93	93	93
94	94	94	94
97	97	97	97
98	98	98	98
105	105	105	105
158	158	194	158
161	161	161	161
168	168	168	168
193	193	193	193
194	194	194	194
194B	194B	194B	194B
194G	194G	194G	194G
194NA	194NA	194NA	194NA
194NALL	194NALL	194NALL	194NALL
194R	194R	194R	194R
198	1157	198	198
199	199	199	199
211-2	211-2	211-2	211-2
212-2	212-2	212-2	212-2
214-2	214-2	214-2	214-2
293	293	293	293
330	330	-	330
558	-	558	558
561	561	561	561
562	562	562	562
563	563	563	563
570	570	570	-
577	577	577	-
631	631	631	631
658	658	658	658
756	756	-	756
880	880	880	880
880LL	880	880	880
881	881	881	881
881LL	881	881	881
882	882	882	882
885	885	885	885
886	886	886	886

For the most up-to-date product information, see www.gelighting.com.

Cross Reference Tables
Tableau de Renvoi
Referencias Cruzadas

Miniature Lamps
Ampoules Miniatures -Lámparas En Miniatura

GE	OSRAM	PHILIPS	WAGNER
889	889	889	889
890	890	890	890
891	891	891	891
892	892	892	-
893	893	893	893
894	894	894	894
896	896	896	896
898	898	898	898
899	899	899	899
904	904	904	904
906	906	906	906
912	912	912	912
916	916	916	916
916NA	916NA	916NA	916NA
917	917	912	917
920	920	920	917
921	921	921	921
922	922	922	922
1003	1003	1003	1003
1004	1004	1004	1004
1034	1034	1157	1034
1073	1073	1156	1073
1141	1141	1141	1141
1142	1142	1142	1142
1155	1155	1155	1155
1156	1156	1156	1156
1156NA	1156A	1156NA	1156NA
1157	1157	1157	1157
1157NA	1157A	1157NA	1157NA
1295NA	1295NA	1295NA	1295NA
1445	1445	1445	1445
1815	1815	1815	1815
1816	1816	1816	1816
1889	1889	1889	1889
1891	1891	1891	1891
1892	1892	1892	1892
1893	1893	1893	1893
1895	1895	1895	1895
2040	2040	2040	2040
2057	2057	2057	2057
2057NA	2057A	2057NA	2057NA
2357	2357	2357	2357
2357NA	2357A	2357NA	2357NA
2396	2396	2396	2396
2397	2397	2397	2397
3057	3057	3057	3057
3057LL	3057LL	3057LL	3057LL
3057NA	3057A	3057NA	3057NA
3155	3155LL	3155	3155
3156	3156	3156	3156

Miniature Lamps
Ampoules Miniatures -Lámparas En Miniatura

GE	OSRAM	PHILIPS	WAGNER
3156LL	3156LL	3156LL	3156LL
3157	3157	3157	3157
3157LL	3157LL	3157LL	3157LL
3157NA	3157A	3157NA	3157NA
3157NALL	3157NALL	3157NALL	3157NALL
3457	3357	3457	3357
3457LL	3357LL	3457LL	3357LL
3457LL	3457LL	3457LL	3457LL
3457NA	3357NA	3457NA	3357NA
3457NA	3457ALL	3457NALL	3457NALL
3496	3496	3496	3496
3497	3497	3497	3497
3652	3652	-	3652
4157LL	4157LL	4157LL	4157LL
4157NALL	4157NALL	4157NALL	4157NALL
7440	7440	7440	7440
7443	7443	7443	7443
9145	9145	9145BP	9145
56110	64115	-	47835
58540	64111	12023	47830
C5W	6418	12844	11005
DE3021	DE3021	12818	11006
DE3022	DE3022	12818	13050
DE3175	DE3175	DE3175	12100
DE3425	DE3425	12854	11004
DE757	66411	12866	17314
H1-55	H1-64150	H1-55W	BP1255/H1
H2-55	H2-64173	H2-55W	BP1255/H2
H3-55	H3-64151	H3-55W	BP1255/H3
H3-100	H3-64153	12455	BP1210/H3
H4-60/55	H4-64193	12342	BP1260/H4
H4-75/70	H4-64196	13342	BP2475/H4
H7-55	H7-64210	H7-55W	BP1255/H7
H8-35	H8-35W	H8-35W	BP1235/H8
H9-65	H9-65W	H9-65W	BP1265/H9
H11-55	H11-55W	H11-55W	BP1255/H11
P21W	7506	12498	17635
P21WLL	7506	LL12498LL	
P21/4W	7225	12594	17881
P21/5W	7528	12499	17916
P21/5W LL	7528LL	-	-
PC168	-	PC168	-
PC194	-	PC194	PC194
PY21W	7507A	12496	17638NA
R5W	5007	12821	17171
R5WLL	5007LL	-	-
R10W	5008	12814	17311
T4W	3893	12929	17131
W3W	2821	12256	17097
W5W	2825	12961	17177

Lamp Locator

The lamps listed here are not to scale. To determine the diameter of a bulb in inches, multiply the bulb number by one-eighth. For example T-2 means approximately 2/8" or 1/4" diameter.

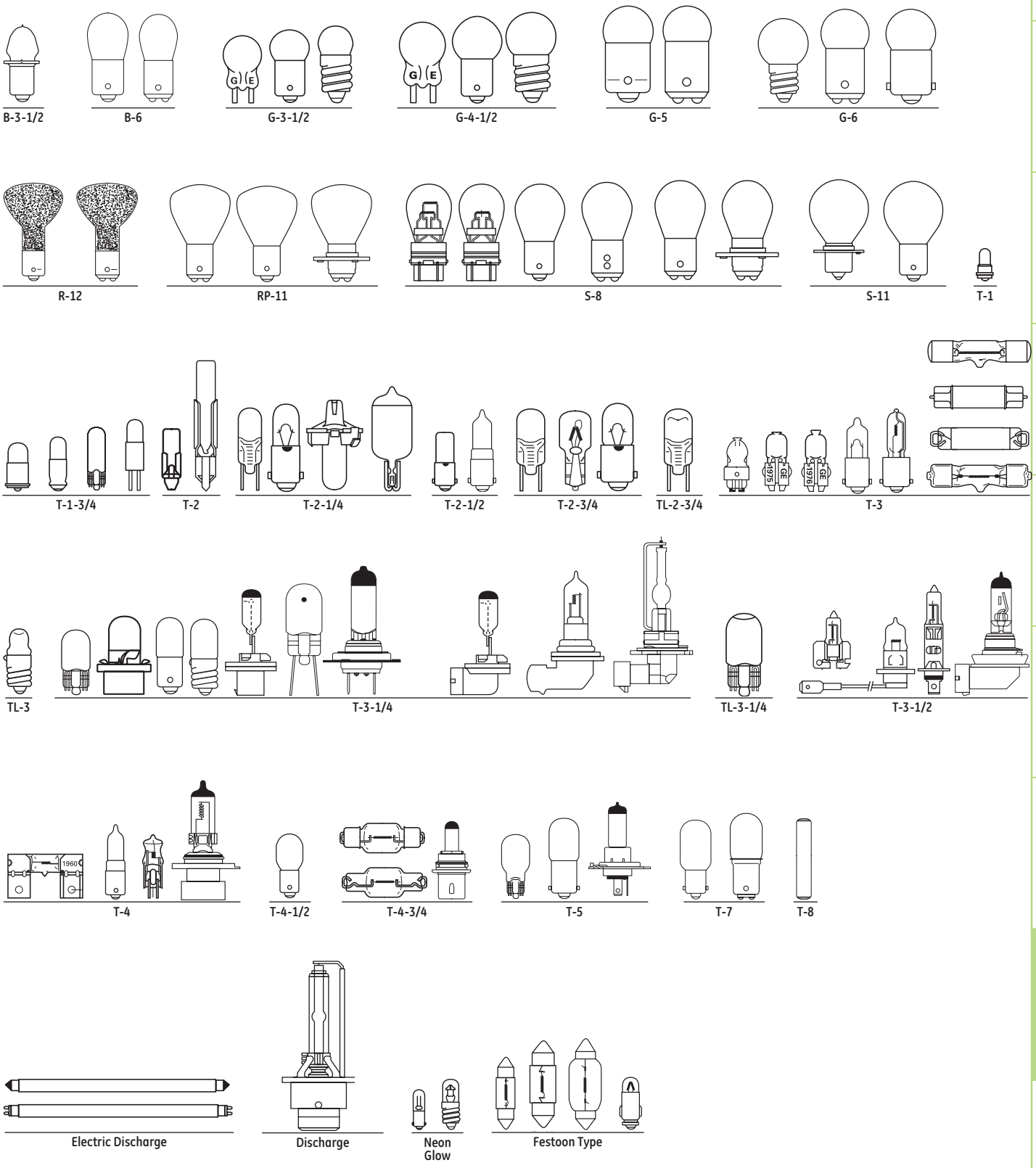

For the most up-to-date product information, see www.gelighting.com.

Miniature Bases

Bases provide electrical contact to the lamp and, in most cases, also support the lamp in the fixture. For miniature and subminiature lamps, bayonet or wedge base types are generally preferred over screw types when vibration is present.

In addition, wedge bases reduce socket size and complexity. Flanged or collared types are usually associated with requirements for filament location.

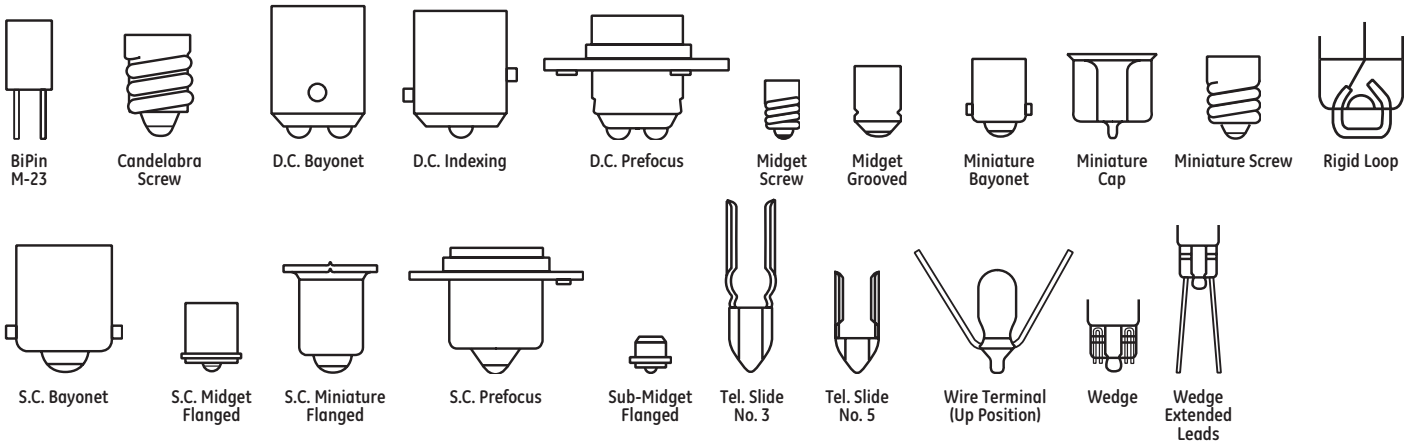

Sealed Beam Lamps

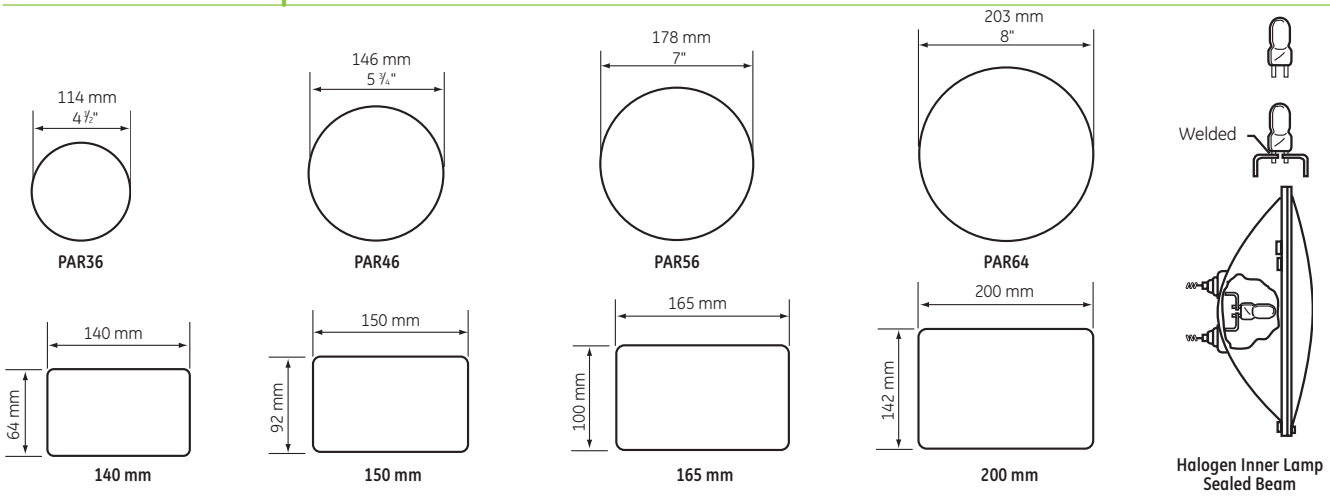

Sealed Beam Bases

Bases provide electrical contact to the lamp. The most common bases for sealed beam lamps are the screw terminal and contact lug types. Other types are also available, as illustrated.

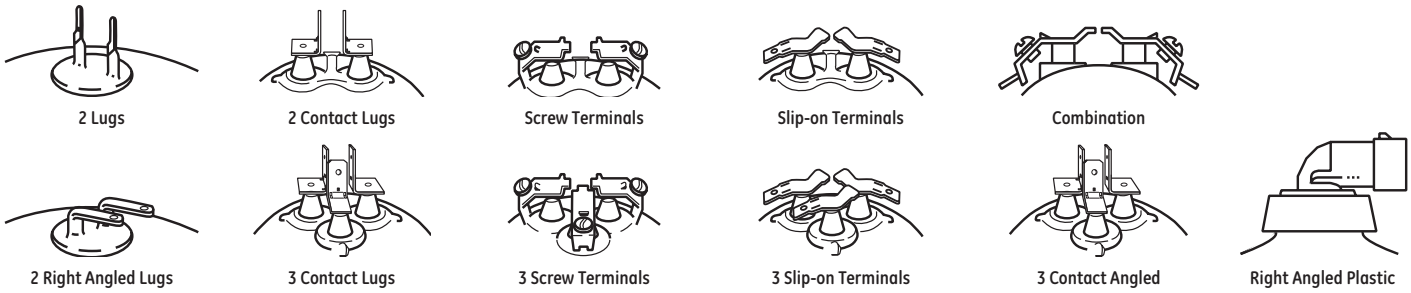

Introduction

GE Miniature and Sealed Beam Product Ordering Information

GE Miniature and Sealed Beam Lamps are designed for those applications requiring specific bulb size, base, and voltage. These lamps are operated on vehicles (cars, trucks, boats, aircraft, tractors) or in special applications utilizing low voltage sources. Most lamps are designated by common ANSI (American National Standards Institute) lamp numbers and lamps in this section are arranged in numerical order. To assist you in identifying lamps, drawings (not to scale) are provided, along with descriptions of bulb and base sizes.

Specific market segments covered in this section are products used in:

Aircraft	Emergency Building Lighting	Marine
Automotive	Flashlight/Hand Lanterns	Medical/Instruments
Agriculture	Garden/Outdoor	Telephone
CIM/Tractor	Indicator	Toys/Entertainment

For additional specifications refer to the Automotive Lamp Catalog obtained through your GE Sales Office. Automotive Selection Guide also available.

Finding and Ordering a Lamp

Most Miniature Lamps have a number on the base or bulb. Generally it will match the lamp number in this catalog, which is sorted in numeric order (prefixes last). The catalog is divided into Miniature and Sealed Beam sections. Sealed Beam lamps start on page 9-14. Often the first prefix is another lamp manufacturer's identification and can be ignored. You can verify the lamp using the drawings provided. Order codes for Blister, Unit, and Bulk Pack for OEM's are provided.

Formulas

The following are commonly used formulas to assist any calculations you may need. For further information, contact your GE Lamp Representative.

- Watts = Volts x Amps Candlepower
- Lumens = 12.57 x Mean Spherical
- Kelvin = Celsius + 273
- Footcandles = Candlepower/Distance squared (miniature lamps only)
- Hot Resistance (Ohms) = Volts/Amps

Abbreviations

The abbreviations used in this catalog include:

A	Amperes
ANSI	American National Standards Institute
Bay.	Bayonet
D.C.	Double Contact
ECE	European Common Market (European Motor Vehicle Standards)
Flg.	Flanged
HID	High Intensity Discharge
LCL	Light Center Length
Min.	Miniature
MOL	Maximum Overall Length
MSCP	Mean Spherical Candlepower
Nom.	Nominal
C.I.M.	Construction & Industrial Machinery
C.P.	Candlepower
Cand.	Candelabra
PAR	Parabolic Aluminized Reflector
Pf.	Prefocus
SAE	Society of Automotive Engineers (US Motor Vehicle Standards)
Sc.	Screw
S.C.	Single Contact
Spec.	Special
Tel.	Telephone
Term.	Terminals
V	Volts
W	Watts

GE Miniature Lamp Prefixes

DE	Double-Ended
H	Halogen
K	Krypton Gas
PC	Printed Circuit Application
PR	Prefocus Base (e.g., "Flashlight Lamp")
Q	Quartz Halogen
W,T,R, C,P	European Designation
D2	Discharge

GE Miniature Lamp Suffixes

A	Amber
AF	All Frost (on outside)
AS15	Ages and Selected to 15% (for candlepower)
B	Blue
CW	Cool White (aircraft lighting)
E-1	Different lead wire material (NI plated)
G	Green
HD	Heavy Duty
HO	High Output
LL	Long Life
NH	Nighthawk™
NHS	Nighthawk™ Sport
NA	Natural Amber (automotive lighting)
PSB	Pilot Indicator/ Short Base
R	Red
SB	Silver Bowl (all or some portion of bulb is silver). Also blue halogen.
TY	Letters after a quartz halogen lamp mean a deviation from the standard lamp – usually refers to the electrical terminals
WW	Warm White (aircraft lighting)
X	Indicates some arbitrary deviation from the normal product
Y	Yellow
-1	Slip-on terminals
-2	Represents various deviations
-3	Represents deviations (e.g. combination terminal)
W	European Designation (Watts)

Headings in this catalog section

The following terms and descriptions can help you when checking Halogen lamp specifications and when ordering products. Within each product line, lamps are divided into families. Within families, lamps are listed by wattage. In each of these groups, lamps are listed alphabetically by bulb shape.

GE Lamp No.: In nearly all cases lamps are marked with a General Electric Trade Number recorded with the ANSI. See glossary of prefixes and suffixes on page 8-21.

Order Code: Use this code when ordering to ensure that you receive the exact product you require.

Case Qty: Quantity of lamps per case if blister pack (BP), unit, or bulk (OEM's).*

Primary Application: Current uses of the lamp in general. Lamps are used in other applications than listed.

Volts: Voltage at which the lamp is designed to provide the amperes, candlepower, and laboratory life characteristics.

Amps or Watts: Energy used expressed as amperes (A) or watts (W) at design voltage.

MSCP/MBCP: Approximate output expressed as initial mean spherical candlepower (see lumen conversion). For Sealed Beam MBCP is the maximum intensity of the beam in candelas, generally in the beam's center, and spread is beam size expressed in degrees.

Bulb: The prefix letter describes the shape and the number is the approximate bulb diameter.

Base: Base types are depicted on the previous pages for both Miniature and Sealed Beam.

Filament Design: C = coiled, CC = coiled coil, -6 = horizontal, -8 = vertical to base. See Miniature and Sealed Beam Catalog for all variations.

LCL (in): Distance in inches between base reference plane and filament center.

MOL (in): In inches from the top of the bulb to the bottom of the base.

Rated Life (hrs): Lamp burning hours to medium life expectancy.

Footnotes, Warning and Caution Notices: See page 8-34 for explanation.

Order Code			Case Qty														
Blister	Unit	Bulk	BP	Unit	Bulk	GE Lamp No.	Primary Application	Volts	Amps (A) or Watts (W)	MSCP	Bulb	Base	Filament	LCL (in)	MOL (in)	Rated Life (hrs)	Footnotes, Warning and Caution Notices
12325	17853		48	50		24	Auto Sidemarker	14.0	.24A	2.0	T2 3/4	Wedge (W2.1x9.5d)	C-2V	0.46	0.91	1500	

T-2 is Tubular approximately 2/8" in diameter. Sealed Beam bulb sizes are also in eighths of an inch if round (PAR). PAR36 is 36/8" or 4-1/2" in diameter. If the Sealed Beam is rectangular in shape the longest side is measured in millimeters. A 165mm Sealed Beam measures 6-1/2" (165mm) across the top.

T 2-3/4

Identifies the shape (S=Pear, T=Tubular, G=Globe, R=Reflector)

Identifies the approximate bulb diameter in eighths of an inch.

*Miniature Incandescent BP is 2 lamps, Miniature Halogen BP is 1 lamp, selected miniature headlamps available in 2 pack BP; PC not shown.

Miniature Lamps

Order Code			Case Qty														
Blister	Unit	Bulk	BP	Unit	Bulk	GE Lamp No.	Primary Application	Volts	Amps (A) or Watts (W)	MSCP	Bulb	Base	Filament	LCL (in)	MOL (in)	Rated Life (hrs)	Footnotes, Warning and Caution Notices
12325	17853		48	50		24	Auto Sidemarker	14.0	.24A	2.0	T2 3/4	Wedge (W2.1x9.5d)	C-2V	0.46	0.91	1500	
12316			48			24NA	Auto Sidemarker	14.0	.24A	1.5	T2 3/4	Wedge (W2.1x9.5d)	C-2V	0.46	0.91	1500	
26480	39220	17460	48	50	4000	37	Auto	14.0	.09A	0.5	T1 3/4	Wedge (W2.1x9.5d)	C-2F	0.40	0.80	2500	
	25450			50		44	Indicator	6.3	.25A	0.9	T3 1/4	Miniature Bayonet (Ba9s)	C-2R	0.78	1.19	3000	
	25485			50		47	Indicator	6.3	.15A	0.5	T3 1/4	Miniature Bayonet (Ba9s)	C-2R	0.78	1.19	3000	
	25550	25552		50	4000	53	Auto and Indicator	14.4	.12A	1.0	G3 1/2	Miniature Bayonet (Ba9s)	C-2V	0.50	0.94	1000	
23218	25591		48	50		57	Auto and Instrument	14.0	.24A	2.0	G4 1/2	Miniature Bayonet (Ba9s)	C-2V	0.56	1.07	500	
12324	25652	25654	48	50	1000	67	Auto	13.5	.59A	4.0	G6	Single Contact Bayonet (BA15s)	C-2R	0.81	1.44	5000	4
71895			48			67NH	Auto, Nighthawk™	13.5	.59A	4.0	G6	Single Contact Bayonet (BA15s)	C-2R	0.81	1.44		
	25692			50		68	Auto and Marine	13.5	.59A	4.0	G6	Double Contact Bayonet (BA15d)	C-2R	0.81	1.44	5000	4
23015		28770	48		4000	73	Indicator	14.0	.08A	0.3	T1 3/4	Wedge (W2.1x9.5d)	C-2F	0.40	0.80	15000	79
21029	38457	38458	48	50	4000	74	Auto	14.0	.10A	0.7	T1 3/4	Wedge (W2.1x9.5d)	C-2F	0.40	0.80	1000	
	40969			50		85	Indicator	28.0	.04A	0.3	T1 3/4	Wedge (W2.1x9.5d)	C-2F	0.40	0.80	7000	79
	25772			10		88	Indicator	6.8	1.91A	15.0	S8	Double Contact Bayonet (BA15d)	C-6	1.12	2.00	300	
12363	25778		48	50		89	Auto	13.0	.58A	6.0	G6	Single Contact Bayonet (BA15s)	C-2R	0.75	1.44	750	
47797			48			89 LL	Auto, Long Life	13.0	.58A	6.0	G6	Single Contact Bayonet (BA15s)	C-2R	0.75	1.44	1500	
12364	25794	25796	48	50	1000	90	Auto and Marine	13.0	.58A	6.0	G6	Double Contact Bayonet (BA15d)	C-2R	0.75	1.44	750	
23217	25811	17461	48	50	500	93	Auto	12.8	1.04A	15.0	S8	Single Contact Bayonet (BA15s)	C-6	1.12	2.00	700	
71904			48			93NH	Auto, Nighthawk™	12.8	1.04A	15.0	S8	Single Contact Bayonet (BA15s)	C-6	1.12	2.00		
00764	25829		48	50		94	Auto and Marine	12.8	1.04A	15.0	S8	Double Contact Bayonet (BA15d)	C-6	1.12	2.00	700	
12322	25836	25838	48	50	1000	97	Auto	13.5	.69A	4.0	G6	Single Contact Bayonet (BA15s)	C-2V	0.81	1.44	5000	4
	16287			50		98	Auto	13.0	.62A	6.0	G6	Single Contact Bayonet (BA15s)	C-2V	0.75	1.44	800	
	36147			50		105	Auto	12.8	1.0A	12.0	B6	Single Contact Bayonet (BA15s)	C-6	1.06	1.75	500	
	25931			50		158	Auto Instrument	14.0	.24A	2.0	T3 1/4	Wedge (W2.1x9.5d)	C-2V	0.56	1.06	500	
23016	25956	16489	48	50	4000	161	Auto Instrument	14.0	.19A	1.0	T3 1/4	Wedge (W2.1x9.5d)	C-2F	0.56	1.06	4000	
71902			48			161 NH	Auto, Nighthawk™	14.0	.19A	1.0	T3 1/4	Wedge (W2.1x9.5d)	C-2F	0.56	1.06		
12327	25962	28757	48	50	4000	168	Auto Instrument	14.0	.35A	3.0	T3 1/4	Wedge (W2.1x9.5d)	C-2F	0.56	1.06	1500	
47827			48			168 LL	Auto, Long Life	14.0	.35A	3.0	T3 1/4	Wedge (W2.1x9.5d)	C-2F	0.56	1.06	3000	
89239			48			168 NH	Auto, Nighthawk™	14.0	.35A	3.0	T3 1/4	Wedge (W2.1x9.5d)	C-2F	0.56	1.06		
	19553	19852		50	4000	193	Truck	14.0	.33A	2.0	T3 1/4	Wedge (W2.1x9.5d)	C-2F	0.56	1.06	15000	
		11807			4000	193E1	Truck Clearance	14.0	.33A	2.0	T3 1/4	Wedge, Wire Terminal (122)	C-2F		1.06	15000	122
12328	25965	28758	48	50	4000	194	Auto	14.0	.27A	2.0	T3 1/4	Wedge (W2.1x9.5d)	C-2F	0.56	1.06	2500	
89240			48			194 NH	Auto, Nighthawk™	14.0	.27A	2.0	T3 1/4	Wedge (W2.1x9.5d)	C-2F	0.56	1.06		
12357			48			194G	Auto, Green	14.0	.27A		T3 1/4	Wedge (W2.1x9.5d)	C-2F		1.06	2500	132

For the most up-to-date product information, see www.gelighting.com.
All footnotes, warning and caution notices found at the end of this section (page 8-34).

Miniature Lamps (continued)

Order Code			Case Qty														
Blister	Unit	Bulk	BP	Unit	Bulk	GE Lamp No.	Primary Application	Volts	Amps (A) or Watts (W)	MSCP	Bulb	Base	Filament	LCL (in)	MOL (in)	Rated Life (hrs)	Footnotes, Warning and Caution Notices
12319	**44859**	**27470**	48	50	4000	**194NA**	Auto Sidemarker	14.0	.27A	1.5	T3 1/4	Wedge (W2.1x9.5d)	C-2F		1.06	2500	
47794			48			**194NA LL**	Auto Amber, Long Life	14.0	.27A	1.5	T3 1/4	Wedge (W2.1x9.5d)	C-2F		1.06	5000	
71894			48			**194NA LL NH**	Auto, Amber, Nighthawk™	14.0	.27A	1.5	T3 1/4	Wedge (W2.1x9.5d)	C-2F		1.06		
12355			48			**194R**	Auto, Red	14.0	.27A	2.0	T3 1/4	Wedge (W2.1x9.5d)	C-2F		1.06	2500	132
25832			48			**194LL**	Auto, Long Life	14.0	.27A	2.0	T3 1/4	Wedge (W2.1x9.5d)	C-2F	0.56	1.06	12000	
00760	**37983**	**37984**	48	50	500	**198**	Truck Stop, Signal	12.8/14.0	2.25/.59A	32.0/3.0	S8	Double Contact Index (BAY15d)	C-6/C-6	1.25	2.00	1200/1500	110,147
	37985	**37986**		50	500	**199**	Truck Stop	12.8	2.25A	32.0	S8	Single Contact Bayonet (BA15s)	C-6	1.25	2.00	1200	110
	25988			50		**210**	Instrument	6.5	1.78A	15.0	B6	Double Contact Bayonet (BA15d)	C-6	1.06	1.75	100	
12673	**39224**	**11803**	48	50	2520	**211-2**	Auto	12.8	.97A	12.0	T3	Miniature Cap	C-8		1.72	1000	
71900			48			**211-2 NH**	Auto, Nighthawk™	12.8	.97A	12.0	T3	Miniature Cap	C-8		1.72		
23220			48			**212-2**	Auto	13.5	.74A	6.0	T3	Miniature Cap	C-8		1.72	2000	4
	39356			50		**214-2**	Auto	13.5	.52A	4.0	T3	Miniature Cap	C-8		1.72	1000	4
	44719			50		**265**	Indicator	28.0	.08A	0.8	G3 1/2	Miniature Bayonet (Ba9s)	C-2F	0.50	0.94	5000	
	81642			50		**301**	Aircraft	28.0	.17A	3.0	G-5	Single Contact Bayonet (BA15s)	C-2F	0.69	1.25	500	
	81641			50		**303**	Aircraft	28.0	.30A	6.0	G-6	Single Contact Bayonet (BA15s)	C-2F	0.75	1.44	500	
	81643			50		**304**	Aircraft	28.0	.30A	6.0	G-6	Double Contact Bayonet (BA15d)	C-2F	0.75	1.44	500	
	26143			50		**305**	Aircraft	28.0	.51A	15.0	S8	Single Contact Bayonet (BA15s)	C-2V	1.12	2.00	300	
	26145			50		**305AF**	Aircraft, Frosted	28.0	.51A		S8	Single Contact Bayonet (BA15s)	C-2V		2.00	300	
	26152			50		**306**	Aircraft	28.0	.51A	15.0	S8	Double Contact Bayonet (BA15d)	C-2V	1.12	2.00	300	
	81644			50		**307**	Aircraft	28.0	.67A	21.0	S-8	Single Contact Bayonet (BA15s)	C-2V	1.12	2.00	300	
	26161			50		**307AF**	Aircraft, Frosted	28.0	.67A	21.0	S8	Single Contact Bayonet (BA15s)	C-2V		2.00	300	
	81645			50		**308**	Aircraft	28.0	.67A	21.0	S8	Double Contact Bayonet (BA15d)	C-2V	1.12	2.00	300	
	81646			50		**308AF**	Aircraft, Frosted	28.0	.67A		S8	Double Contact Bayonet (BA15d)	C-2V		2.00	300	
	26175			10		**309**	Aircraft, Frosted	28.0	.90A	32.0	S11	Single Contact Bayonet (BA15s)	C-2V	1.25	2.38	300	
	81647			10		**311**	Aircraft	28.0	1.29A	50.0	S11	Single Contact Bayonet (BA15s)	C-2V	1.25	2.38	300	
	81649	**81650**		50	4000	**313**	Aircraft	28.0	.17A	3.5	T3 1/4	Miniature Bayonet (Ba9s)	C-2F	0.62	1.19	500	
	81651			50		**315**	Aircraft	28.0	.90A	32.0	S8	Single Contact Bayonet (BA15s)	C-2V	1.12	2.00	300	
	81652			50		**316**	Aircraft	6.0	.70A	3.4	T3 1/4	Miniature Bayonet (Ba9s)	C-2R	0.62	1.19	500	
	80862			10		**317**	Aircraft	28.0	3.50W	2.6	T3	2-Pin (G4)	C-2R	0.78	1.16	1000	
	28519			50		**327**	Aircraft	28.0	.04A	0.3	T1 3/4	Single Contact Midget Flanged	C-2F	0.38	0.63	4000	79
	28546			50		**328**	Aircraft	6.0	.20A	0.3	T1 3/4	Single Contact Midget Flanged	C-2R	0.38	0.63	1000	10
	28567			50		**330**	Aircraft	14.0	.08A	0.5	T1 3/4	Single Contact Midget Flanged	C-2F	0.38	0.63	1500	
	28588			50		**334**	Aircraft	28.0	.04A	0.3	T1 3/4	Midget Grooved	C-2F	0.38	0.63	4000	79
	26255			50		**356**	Aircraft	28.0	.17A	3.5	G3 1/2	Miniature Bayonet (Ba9s)	C-2F	0.50	0.94	500	14
		87381			1000	**380**	Aircraft	6.3	.04A	0.0	T1 3/4	Single Contact Midget Flanged	C-2V		0.64	50000	79
	28653			50		**381**	Indicator	6.3	.20A	0.4	T1 3/4	Single Contact Midget Flanged	C-2F	0.38	0.63	20000	79
	28657			50		**382**	Indicator	14.0	.08A	0.3	T1 3/4	Single Contact Midget Flanged	C-2F	0.38	0.63	40000	79
	28660			50		**385**	Indicator	28.0	.04A	0.2	T1 3/4	Single Contact Midget Flanged	C-2F	0.44	0.81	10000	78,79
	28662			50		**386**	Indicator	14.0	.08A	0.3	T1 3/4	Midget Grooved	C-2F	0.38	0.63	40000	79
	28664	**25090**		50	1000	**387**	Indicator	28.0	.04A	0.3	T1 3/4	Single Contact Midget Flanged	C-2F	0.38	0.63	7000	
	28672			50		**388**	Indicator	28.0	.04A	0.3	T1 3/4	Midget Grooved	C-2F	0.38	0.63	7000	79
		87398			1000	**394**	Aircraft	12.0	.04A	0.1	T1 3/4	Single Contact Midget Flanged	C-2F		0.64	10000	79
	38918			50		**400**	Aircraft	28.0	.10A	1.6	T3 1/4	Wedge (W2.1x9.5d)	C-2F	0.56	1.06	1000	
	26441			50		**456**	Instrument	28.0	.17A	2.0	G4 1/2	Miniature Bayonet (Ba9s)	C-2F	0.56	1.07	5000	
	39645			50		**464**	Aircraft	28.0	.17A	3.0	T3 1/4	Wedge (W2.1x9.5d)	C-2F	0.56	1.06	1500	
12358	**39746**	**11820**	48	50	2520	**561**	Auto	12.8	.97A	12.0	T3	Rigid Loop	C-8		1.72	1000	
23019			48			**562**	Auto	13.5	.74A	6.0	T3	Rigid Loop	C-8		1.72	2000	4
		11825			1000	**563**	Auto	13.5	.52A	4.0	T3	Rigid Loop	C-8		1.72	1000	4
	18442			50		**590**	Strip Lighting	13.5	.37A	4.0	T3 1/4	Wedge (W2.1x9.5d)	C-2V	0.50	1.06	2000	
	81653	**81654**		50	1000	**623**	Instrument	28.0	.37A	6.0	G-6	Single Contact Bayonet (BA15s)	2C-2V	0.75	1.44	1000	
23023	**26570**		48	50		**631**	Auto	14.0	.63A	6.0	G6	Single Contact Bayonet (BA15s)	2C-2R	0.75	1.44	1000	
	81670	**81671**		50	4000	**658**	Indicator	14.0	.08A	0.3	T3 1/4	Wedge (W2.1x9.5d)	C-2F	0.56	1.06	15000	79
		87407			1000	**680**	Aircraft	5.0	.06A	0.03	T1	Wire Terminals	C-2R		0.24	100000	79
		87336			1000	**683**	Aircraft	5.0	.06A	0.05	T1	Wire Terminals	C-2R		0.24	100000	79
		87321			1000	**683AS15**	Aircraft	5.0	.06A	0.05	T1	Wire Terminals	C-2R		0.24	100000	79
		28706			1000	**685**	Aircraft	5.0	.06A	0.1	T1 3/4	Sub-Midget Flanged	C-2R	0.19	0.38	40000	79
	43132			50		**705**	Aircraft	28.0	.51A	15.0	S8	Single Contact Bayonet (BA15s)	CC-6	1.12	2.00	900	
		87411			1000	**713**	Aircraft	5.0	.75A	0.09	T1	Wire Terminals	C-2R		0.24	100000	79
		29903			1000	**715**	Aircraft	5.0	.115A	0.15	T1	Wire Terminals	C-2R		0.25	40000	79
		29901			1000	**715AS15**	Aircraft	5.0	.115A	0.15	T1	Wire Terminals	C-2R		0.25	40000	79
		29916			1000	**718**	Aircraft	5.0	.115A	0.15	T1	Sub-Midget Flanged	C-2R		0.36	40000	79
		29905			1000	**718AS15**	Aircraft	5.0	.115A	0.15	T1	Sub-Midget Flanged	C-2R		0.36	40000	79
	26591			50		**755**	Indicator	6.3	.15A	0.3	T3 1/4	Miniature Bayonet (Ba9s)	C-2R	0.78	1.19	20000	79

For the most up-to-date product information, see www.gelighting.com.
All footnotes, warning and caution notices found at the end of this section (page 8-34).

Miniature Lamps (continued)

Order Code			Case Qty			GE Lamp No.	Primary Application	Volts	Amps (A) or Watts (W)	MSCP	Bulb	Base	Filament	LCL (in)	MOL (in)	Rated Life (hrs)	Footnotes, Warning and Caution Notices
Blister	Unit	Bulk	BP	Unit	Bulk												
	26593			50		756	Indicator	14.0	.08A	0.3	T3 1/4	Miniature Bayonet (Ba9s)	C-2F	0.62	1.19	15000	79
	81655			50		757	Indicator	28.0	.08A	0.6	T3 1/4	Miniature Bayonet (Ba9s)	C-2F	0.62	1.19	15000	79
	11014			20		767	Instrument	6.0	2.00A	19.0	T2 1/4	Miniature Bayonet (Ba9s)	C-6	0.56	1.13	50	306
	11250			10		773	Instrument	12.0	.67A	10.0	T2 3/4	2-Pin (G4)	C-6	0.77	1.05	1000	124,306
	12723	12724		10	500	774	Emergency Lighting	12.0	.67A	13.0	T2 1/4	2-Pin (G4)	C-6	0.77	1.00	50	124,306
	49718			10		778	Instrument	6.0	3.33A	32.0	T2 3/4	2-Pin (G4)	C-6	0.77	1.05	100	124,306
	18344			10		780	Strip Lighting	12.0	10.00W	12.0	T2 3/4	2-Pin (G4)	C-6	0.77	1.05	2000	124,306
	44840	44841		10	500	782	Instrument	12.0	1.66A	25.0	T2 3/4	2-Pin (G4)	C-6	0.77	1.05	2000	124,306
	44500	44501		10	500	783	Emergency Lighting	12.0	1.00A	22.0	T2 1/4	2-Pin (G4)	C-6	0.77	1.00	50	124,306
	43760	43761		10	500	784	Emergency Lighting	6.0	1.00A	9.0	T2 1/4	2-Pin (G4)	C-6	0.77	1.00	50	124,306
	43762	43763		10	500	785	Emergency Lighting	6.0	1.33A	13.0	T2 1/4	2-Pin (G4)	C-6	0.77	1.00	50	124,306
	43764	43765		10	500	786	Emergency Lighting	6.0	2.00A	19.0	T2 1/4	2-Pin (G4)	C-6	0.77	1.00	50	124,306
	43115	43116		10	500	787	Instrument	6.0	1.67A	16.0	T2 1/4	2-Pin (G4)	C-6	0.77	1.00	100	124,306
	43117	43118		10	500	788	Instrument	6.0	3.33A	32.0	T2 1/4	2-Pin (G4)	C-6	0.77	1.00	100	124,306
	43119			10		789	Instrument	12.0	1.17A	22.0	T2 3/4	2-Pin (G4)	C-6	0.77	1.05	200	124,306
	43121			10		790	Instrument	14.0	1.79A	42.0	T2 3/4	2-Pin (G4)	C-6	0.77	1.05	200	124,306
	43123	43124		10	500	791	Instrument	14.0	2.50A	61.0	T2 3/4	2-Pin (G4)	C-6	0.77	1.05	200	124,306
	20469			10		795	Signal	12.8	50.00W	108.0	T4	Single Contact Bayonet (BA15s)	C-6	1.25	2.50	200	4,306
	40848	14132		10	540	862	Tractor	12.8	2.93A	60.0	T3 1/4	Right Angle Prefocus (PGJ13)	C-6	1.25	2.68	1900	306
12320		20904	48		540	880	Auto Fog	12.8	2.10A	43.0	T3 1/4	Axial Plastic (PG13)	C-6	1.25	2.68	300	17,160,306
		27582			540	880 LL	Auto Fog, Long Life	12.8	2.10A	43.0	T3 1/4	Axial Plastic (PG13)	C-6	1.25	2.68	1000	17,160,306
25101			12			880 NH	Auto Fog, Nighthawk™	12.8	2.10A	43.0	T3 1/4	Axial Plastic (PG13)	C-6	1.25	2.68		17,160,306
25163			24			880 NH	Auto Fog. Nighthawk™	12.8	2.10A	43.0	T3 1/4	Axial Plastic (PG13)	C-6	1.25	2.68		17,160,306
12334		20905	48		540	881	Auto Fog	12.8	2.10A	43.0	T3 1/4	Right Angle Prefocus (PGJ13)	C-6	1.25	2.68	300	17,160,306
		27583			540	881 LL	Auto Fog, Long Life	12.8	2.10A	43.0	T3 1/4	Right Angle Prefocus (PGJ13)	C-6	1.25	2.68	1000	17,160,306
	13158	13161		10	1000	882	Auto Instrument	12.8	.35A	3.8	T2 1/4	Printed Circuit Socket	C-6	0.37	1.18	2000	306
	18167			10		882X	Auto Instrument	12.8	.35A	3.8	T2 1/4	2-Pin (G4)	C-6	0.77	1.00	2000	124,306
12335		20907	48		540	885	Auto Fog	12.8	3.90A	100.0	T3 1/4	Axial Plastic (PG13)	C-6	1.25	2.68	200	4,306
14689		20909	48		540	886	Auto Fog	12.8	3.90A	100.0	T3 1/4	Right Angle Prefocus (PGJ13)	C-6	1.25	2.68	200	4,306
		25639			540	887	Tractor Work Light	12.8	3.90A	95.0	T3 1/4	Axial Plastic (PG13)	C-6	1.25	2.68	400	4,306
		25703			540	888	Tractor Work Light	12.8	3.90A	95.0	T3 1/4	Right Angle Prefocus (PGJ13)	C-6	1.25	2.68	400	4,306
12336		20910	48		540	889	Auto Signal	12.8	2.10A	43.0	T3 1/4	Right Angle Prefocus (PGJ13)	C-6	1.00	2.68	300	306
12337		20911	48		540	890	Auto Signal	12.8	2.10A	43.0	T3 1/4	Axial Plastic (PG13)	C-6	1.00	2.68	300	306
12308	15246	15248	48	10	500	891	Auto Stop	12.8	.63A	11.0	T2 1/4	2-Pin (G4)	C-6	0.77	1.00	500	124,306
12338		20913	48		540	893	Auto Fog	12.8	2.93A	75.0	T3 1/4	Axial Plastic (PG13)	C-6	1.25	2.68	200	4,17,160,306
		89115			540	893CL	Tractor	12.8	2.93A	75.0	T3 1/4	Axial Plastic (PG13)	C-6	1.25	2.68	200	4,160,306
25172			24			893 NH	Auto Fog, Nighthawk™	12.8	2.93A	75.0	T3 1/4	Axial Plastic (PG13)	C-6	1.25	2.68		4,17,160,306
25102			12			893 NH	Auto Fog, Nighthawk™	12.8	2.93A	75.0	T3 1/4	Axial Plastic (PG13)	C-6	1.25	2.68		4,17,160,306
22112	20238	18455	48	10	540	894	Tractor	12.8	2.93A	75.0	T3 1/4	Right Angle Prefocus (PGJ13)	C-6	1.25	2.68	200	4,306
22113		20914	48		540	896	Auto Fog	12.8	2.93A	75.0	T3 1/4	Right Angle Prefocus (PGJ13)	C-6	1.25	2.68	200	4,17,160,306
98093		12271	48		540	898	Auto Fog	12.8	2.93A	60.0	T3 1/4	Right Angle Prefocus (PGJ13)	C-6	1.25	2.68	1900	4,17,160,306
22111		12272	48		540	899	Auto Fog	12.8	2.93A	60.0	T3 1/4	Axial Plastic (PG13)	C-6	1.25	2.68	1900	4,17,160,306
14273			48			901	Garden	12.8	.31A	2.9	T5	Wedge (W2.1x9.5d)	C-2R	0.81	1.49	500	
23024	40462	40463	48	50	1000	904	Auto	13.5	.69A	4.0	T5	Wedge (W2.1x9.5d)	C-2F	0.81	1.49	5000	4
12366	40289	28763	48	50	1000	906	Auto	13.0	.69A	6.0	T5	Wedge (W2.1x9.5d)	C-2F	0.81	1.49	1000	
	44754	16858		50	1000	908	Emergency Lighting	6.0	1.50A	12.0	T5	Wedge (W2.1x9.5d)	C-2R	0.81	1.49	50	
	44756	16859		50	1000	909	Emergency Lighting	6.0	.62A	3.0	T5	Wedge (W2.1x9.5d)	C-2R	0.81	1.49	50	
12365	40504	28767	48	50	1000	912	Auto	12.8	1.00A	12.0	T5	Wedge (W2.1x9.5d)	C-2R	0.81	1.49	1000	
67903			48			912 LL	Auto, Long Life	12.8	1.00A	12	T5	Wedge (W2.1x9.5d)	C-2R	0.81	1.49	2000	
89242			48			912 NH	Auto, Nighthawk™	12.8	1.00A	12.0	T5	Wedge (W2.1x9.5d)	C-2R	0.81	1.49		
	44769			50		914	Emergency Lighting	4.0	.90A	3.5	T5	Wedge (W2.1x9.5d)	C-6	0.75	1.49	50	
	44771	44772		50	1000	915	Emergency Lighting	12.0	.75A	11.0	T5	Wedge (W2.1x9.5d)	C-2R	0.81	1.49	50	
23025		28768	48		1000	916	Auto	13.5	.54A	2.0	T5	Wedge (W2.1x9.5d)	C-2F	0.81	1.49	10000	
	21860			50		916NA	Auto, Amber	13.0	.54A	1.5	T5	Wedge (W2.1x9.5d)	C-2F	0.81	1.49	10000	
40179	17837		30	50		918	Garden	12.8	.56A	6.5	T5	Wedge (W2.1x9.5d)	C-2R	0.81	1.49	500	
12307	43374	45752	48	50	1000	921	Auto	12.8	1.40A	21.0	T5	Wedge (W2.1x9.5d)	C-2R	0.81	1.49	500	
67907			48			921LL	Auto, Long Life	12.8	1.40A	21	T5	Wedge (W2.1x9.5d)	C-2R	0.81	1.49	1000	
89238			48			921 NH	Auto, Nighthawk™	12.8	1.40A	21.0	T5	Wedge (W2.1x9.5d)	C-2R	0.81	1.49		
85938			25			921XE	Undercabinet	12.8	18.00W	21.0	T5	Wedge (W2.1x9.5d)	C-2R	0.81	1.49	10000	121
23027	13274	13275	48	50	1000	922	Auto	12.8	.98A	15.0	T5	Wedge (W2.1x9.5d)	C-2R	0.81	1.49	200	
71903			48			922 NH	Auto, Nighthawk™	12.8	.98A	15.0	T5	Wedge (W2.1x9.5d)	C-2R	0.81	1.49		

For the most up-to-date product information, see www.gelighting.com.
All footnotes, warning and caution notices found at the end of this section (page 8-34).

Miniature Lamps (continued)

Order Code			Case Qty															
Blister	Unit	Bulk	BP	Unit	Bulk	GE Lamp No.	Primary Application	Volts	Amps (A) or Watts (W)	MSCP	Bulb	Base	Filament	LCL (in)	MOL (in)	Rated Life (hrs)	Footnotes, Warning and Caution Notices
40180			30			**923**	Garden	12.8	.91A	12.5	T5	Wedge (W2.1x9.5d)	C-2R	0.81	1.49	500	
	13483			50		**926**	Emergency Lighting	4.0	1.80A	7.5	T5	Wedge (W2.1x9.5d)	C-2R	0.81	1.49	50	
	13485	**13486**		50	1000	**927**	Emergency Lighting	6.0	1.2A	8.0	T5	Wedge (W2.1x9.5d)	C-2R	0.81	1.49	50	
	16975	**15285**		50	1000	**939**	Emergency Lighting	6.0	.9A	5.4	T5	Wedge (W2.1x9.5d)	C-2R	0.81	1.49	50	
		23684			2500	**963**	Emergency Lighting	6.0	2.00A	15.0	T5	Wedge (W2.1x9.5d)	C-2R	0.81	1.49	50	
12367	**26709**		48	50		**1003**	Auto	12.8	.94A	15.0	B6	Single Contact Bayonet (BA15s)	C-6	1.06	1.75	200	
47800			48			**1003 LL**	Auto, Long Life	12.8	.94A	15.0	B6	Single Contact Bayonet (BA15s)	C-6	1.06	1.75	400	
71899			48			**1003 NH**	Auto, Nighthawk™	12.8	.94A	15.0	B6	Single Contact Bayonet (BA15s)	C-6	1.06	1.75		
12373	**26726**		48	50		**1004**	Auto	12.8	.94A	15.0	B6	Double Contact Bayonet (BA15d)	C-6	1.06	1.75	200	
	26775			50		**1034**	Auto Stop, Tail	12.8/14	1.80/.59A	32.0/3.0	S8	Double Contact Index (BAY15d)	C-6/C-6	1.25	2.00	200/ 5000	
40134	**26838**		48	50		**1073**	Auto Signal	12.8	1.8A	32.0	S8	Single Contact Bayonet (BA15s)	C-6	1.25	2.00	200	
71905			48			**1073NH**	Auto, Nighthawk™	12.8	1.8A	32.0	S8	Single Contact Bayonet (BA15s)	C-6	1.25	2.00		
00765	**26854**		48	50		**1076**	Auto	12.8	1.8A	32.0	S8	Double Contact Bayonet (BA15d)	C-6	1.25	2.00	200	
	26885			10		**1133**	Instrument	6.2	3.91A	32.0	RP11	Single Contact Bayonet (BA15s)	C-2R	1.25	2.25	200	305
12346	**26903**	**26905**	48	50	500	**1141**	Auto	12.8	1.44A	21.0	S8	Single Contact Bayonet (BA15s)	C-6	1.25	2.00	1000	
47802			48			**1141 LL**	Auto, Long Life	12.8	1.44A	21.0	S8	Single Contact Bayonet (BA15s)	C-6	1.25	2.00	2000	
71897			48			**1141 NH**	Auto, Nighthawk™	12.8	1.44A	21.0	S8	Single Contact Bayonet (BA15s)	C-6	1.25	2.00		
00759	**26917**	**26919**	48	50	500	**1142**	Auto	12.8	1.44A	21.0	S8	Double Contact Bayonet (BA15d)	C-6	1.25	2.00	1000	
12297			48			**1154**	Auto Stop, Tail	6.4/7.0	2.63/.75A	21.0/3.0	S8	Double Contact Index (BAY15d)	C-6	1.25	2.00	200/1000	
71889			48			**1154 NH**	Auto, Nighthawk™	6.4/7.0	2.63/.75A	21.0/3.0	S8	Double Contact Index (BAY15d)	C-6	1.25	2.00		
	26955			50		**1155**	Truck Marker	13.5	.59A	4.0	G6	Single Contact Bayonet (BA15s)	2C-2R	0.81	1.44	5000	4
12344	**26960**	**26962**	48	50	500	**1156**	Auto, Stop	12.8	2.10A	32.0	S8	Single Contact Bayonet (BA15s)	C-6	1.25	2.00	1200	
23334		**11666**	48		1000	**1156 LL**	Auto, Stop, Long Life	12.8	2.10A	32.0	S8	Single Contact Bayonet (BA15s)	C-6	1.25	2.00	2400	
21028	**20248**		48	50		**1156NA**	Auto, Amber	12.8	2.10A	24.0	S8	Single Contact Bayonet (BA15s)	C-6	1.25	2.00	1200	
89241			48			**1156 NH**	Auto, Nighthawk™	12.8	2.10A	32.0	S8	Single Contact Bayonet (BA15s)	C-6	1.25	2.00		
12294	**26969**	**26971**	48	50	500	**1157**	Auto Stop, Tail	12.8/14	2.10/.59A	32.0/3.0	S8	Double Contact Index (BAY15d)	C-6/C-6	1.25	2.00	1200 /5000	
23337			48			**1157 LL**	Auto Stop, Tail. Long Life	12.8/14	2.10/.59A	32.0/3.0	S8	Double Contact Index (BAY15d)	C-6/C-6	1.25	2.00	2400 /10000	
89236			48			**1157 NH**	Auto, Nighthawk™	12.8/14	2.10/.59A	32.0/3.0	S8	Double Contact Index (BAY15d)	C-6/C-6	1.25	2.00		
12310	**26975**	**26976**	48	50	500	**1157NA**	Auto, Amber	12.8/14	2.10/.59A	24.0/2.0	S8	Double Contact Index (BAY15d)	C-6/C-6	1.25	2.00	1200/ 5000	
47798			48			**1157NA LL**	Auto, Amber, Long Life	12.8/14	2.10/.59A	24.0/2.0	S8	Double Contact Index (BAY15d)	C-6/C-6	1.25	2.00	2400 /10000	
71891			48			**1157NA NH**	Auto, Amber, Nighthawk™	12.8/14	2.10/.59A	24.0/2.0	S8	Double Contact Index (BAY15d)	C-6/C-6	1.25	2.00		
	27004			10		**1176**	Auto Stop, Tail	12.8/14	1.34/.59A	21.0/6.0	S8	Double Contact Bayonet (BA15d)	C-6/C-6	1.25	2.00	300/ 1500	
	27021	**27023**		10	500	**1195**	Auto	12.5	3.00A	50.0	RP11	Single Contact Bayonet (BA15s)	C-2R	1.25	2.25	300	305
	27026			10		**1196**	Auto	12.5	3.00A	50.0	RP11	Double Contact Bayonet (BA15d)	C-2R	1.25	2.25	300	305
	39904			10		**1229**	Emergency Lighting	40.0	.38A	15.0	S8	Double Contact Bayonet (BA15d)	C-2V	1.12	2.00	400	
	81679			50		**1251**	Instrument	28.0	.23A	3.0	G6	Single Contact Bayonet (BA15s)	2C-2V	0.75	1.44	2000	
	22523		48	10		**1295NA**	Auto, Amber	12.5	3.00A	37.0	S8	Single Contact Bayonet (BA15s)	C-2R	1.25	2.00	200	
	12824			50		**1308**	Aircraft, Reading	28.0	.56A	16.0	B6	Single Contact Bayonet (BA15s)	CC-8	1.06	1.75	2000	
	81656			50		**1309**	Aircraft	28.0	.52A	15.0	B6	Single Contact Bayonet (BA15s)	CC-8	1.06	1.75	2000	
	81667			50		**1315**	Aircraft, Emergency	2.5	1.00A	1.8	G5	Single Contact Bayonet (BA15s)	C-6	0.69	1.25	20	116
	34265			50		**1317**	Aircraft, Emergency	6.0	.51A	3.4	B6	Single Contact Bayonet (BA15s)	C-6	1.12	1.75	100	116
	27150			10		**1383**	Aircraft, Reading	13.0	20.0W		R12	Single Contact Bayonet (BA15s)	C-8		2.63	300	
	27154			10		**1385**	Aircraft, Reading	28.0	20.0W		R12	Single Contact Bayonet (BA15s)	CC-8		2.63	300	
	27179			50		**1408**	Signal	10.0	.13A	0.9	T3 1/4	Miniature Bayonet (Ba9s)	C-2V	0.62	1.19	250	13
12329	**27207**		48	50		**1445**	Auto	14.4	.135A	0.7	G3 1/2	Miniature Bayonet (Ba9s)	C-2V	0.50	0.94	2000	13
	27263			50		**1450**	Indicator	24.0	.035A	0.2	G3 1/2	Miniature Bayonet (Ba9s)	C-2F	0.50	0.94	3000	
	81669			10		**1460X**	Microscope	6.5	2.75A	23.0	S8	Double Contact Prefocus	C-6	1.25	2.00	100	11
	81657			10		**1495**	Aircraft	28.0	.30A	6.0	T4 1/2	Miniature Bayonet (Ba9s)	C-2F	0.62	1.38	500	11
	81678			10		**1495X**	Aircraft, Gas Filled	28.0	.30A	6.0	T4 1/2	Miniature Bayonet (Ba9s)	C-2F	0.62	1.38	500	14
	81672			10		**1591**	Aircraft	28.0	.61A	15.0	S8	Single Contact Bayonet (BA15s)	C-2V	1.12	2.00	1000	13
	27461			10		**1612**	Instrument	5.4	1.90A	10.0	S8	Double Contact Bayonet (BA15d)	C-6	1.25	2.00	1000	147
	27472			10		**1619**	Instrument	6.7	1.90A	15.0	S8	Single Contact Bayonet (BA15s)	C-6	1.12	2.00	500	
	27488	**27489**		10	500	**1630**	Instrument	6.5	2.75A	23.0	S8	Double Contact Prefocus	C-6	1.00	2.00	100	11
	27504			50		**1638**	Marine	28.0	1.02A	32.0	S8	Double Contact Bayonet (BA15d)	2C-6	1.25	2.00	500	
	27529			10		**1662**	Aircraft	28/28	.93/.34A	32.0/6.0	S8	Double Contact Index (BAY15d)	CC-6/C-2V	1.25	2.00	400/1000	13,15,33
	27532			50		**1665**	Aircraft	28.0	.80A	21.0	S8	Single Contact Bayonet (BA15s)	C-2V	1.12	2.00	1000	13
	81658			50		**1665AF**	Aircraft, Frosted	28.0	.80A		S8	Single Contact Bayonet (BA15s)	C-2V		2.00	1000	13
	81668			10		**1680X**	Aircraft	6.0	4.10A	32.0	S8	Single Contact Bayonet (BA15s)	C-6	1.25	2.00	300	
	27557			50		**1683**	Aircraft, Series Filament	28.0	1.02A	32.0	S8	Single Contact Bayonet (BA15s)	2C-6	1.25	2.00	500	

For the most up-to-date product information, see www.gelighting.com.
All footnotes, warning and caution notices found at the end of this section (page 8-34).

Miniature Lamps (continued)

Order Code			Case Qty			GE Lamp No.	Primary Application	Volts	Amps (A) or Watts (W)	MSCP	Bulb	Base	Filament	LCL (in)	MOL (in)	Rated Life (hrs)	Footnotes, Warning and Caution Notices
Blister	Unit	Bulk	BP	Unit	Bulk												
	27566			50		1691	Aircraft, Series Filament	28.0	.61A	15.0	S8	Single Contact Bayonet (BA15s)	2C-2R	1.12	2.00	1000	
	27568			50		1691AF	Aircraft, Frosted	28.0	.61A		S8	Single Contact Bayonet (BA15s)	2C-2R		2.00	1000	
	27571			10		1692	Marine	28.0	.61A	15.0	S8	Double Contact Bayonet (BA15d)	2C-2R	1.12	2.00	1000	
	27630			10		1777	Aircraft	12.8	1.52A	26.0	S8	Single Contact Bayonet (BA15s)	C-2R	1.12	2.00	400	
	27667			50		1813	Radio	14.4	.10A	0.9	T3 1/4	Miniature Bayonet (Ba9s)	C-2V	0.62	1.19	1000	13
00758	27677	27679	48	50	4000	1815	Indicator	14.0	.20A	1.4	T3 1/4	Miniature Bayonet (Ba9s)	C-2F	0.75	1.19	3000	147
12359	27688		48	50		1816	Aircraft, Auto	13.0	.33A	3.0	T3 1/4	Miniature Bayonet (Ba9s)	C-2V	0.62	1.19	1000	13
	81659			50		1818	Aircraft	24.0	.17A	3.3	T3 1/4	Miniature Bayonet (Ba9s)	C-2F	0.62	1.19	250	147
	81660	81661		50	1000	1819	Indicator	28.0	.04A	0.3	T3 1/4	Miniature Bayonet (Ba9s)	C-2F	0.62	1.19	2500	
	81663			50		1820	Indicator	28.0	.10A	1.6	T3 1/4	Miniature Bayonet (Ba9s)	C-2F	0.62	1.19	1000	
	27749			50		1822	Indicator	36.0	.10A	2.1	T3 1/4	Miniature Bayonet (Ba9s)	C-2F	0.62	1.19	1000	
	27772			50		1828	Indicator	37.5	.05A	0.7	T3 1/4	Miniature Bayonet (Ba9s)	C-2F	0.62	1.19	3000	
	81664			50		1829	Indicator	28.0	.07A	1.0	T3 1/4	Miniature Bayonet (Ba9s)	C-2F	0.62	1.19	1000	
	27804			50		1835	Indicator	55.0	.05A	1.1	T3 1/4	Miniature Bayonet (Ba9s)	C-2F	0.62	1.19	5000	
	81665	81666		50	1000	1864	Aircraft	28.0	.17A	3.0	T3 1/4	Miniature Bayonet (Ba9s)	C-2F	0.62	1.19	1500	
	27868			50		1866	Radio	6.3	.25A	0.7	T3 1/4	Miniature Bayonet (Ba9s)	C-2R	0.78	1.19	5000	44
	40383			50		1873	Photo Scanner	28.0	.20A	3.0	T3 1/4	Miniature Bayonet (Ba9s)	C-2F	0.62	1.19	7000	
12331	27917		48	50		1891	Auto	14.0	.24A	2.0	T3 1/4	Miniature Bayonet (Ba9s)	C-2F	0.62	1.19	500	
00767	27927		48	50		1892	Auto	14.4	.12A	0.8	T3 1/4	Miniature Bayonet (Ba9s)	C-2F	0.62	1.19	1000	
12332	27935	27937	48	50	4000	1893	Auto	14.0	.33A	2.0	T3 1/4	Miniature Bayonet (Ba9s)	C-2F	0.62	1.19	7500	
12330	27945	27948	48	50	4000	1895	Auto	14.0	14.2	14.3	G4 1/2	Miniature Bayonet (Ba9s)	C-2F	0.56	1.07	2000	
71896			48			1895 NH	Auto, Nighthawk™	14.0	14.2	14.3	G4 1/2	Miniature Bayonet (Ba9s)	C-2F	0.56	1.07		
	34021			10		1939X	Aircraft	28.0	1.79A	70.0	T7	Single Contact Bayonet (BA15s)	C-2V	1.25	2.16	300	13,14
	28008			10		1940	Aircraft	14.0	3.57A	75.0	T7	Single Contact Bayonet (BA15s)	C-8Z	1.25	2.16	300	14
	18617			10		1946	Aircraft	28.0	250W	660.0	T3	2-Pin with Leads	CC-6	0.87	1.46	50	
	28011			10		1958	Aircraft	28.0	150W	250.0	T4	Tab	CC-8	0.75	2.25	300	304
	39641			10		1962B	Special Service	8.5	62W	100.0	T3	Wire Terminals	C-6	0.29	1.14	50	304
	12859			10		1962BG	Aircraft	8.5	62W	110.0	T3	Wire Terminals	C-6	0.29	1.14	50	304
	37947			10		1962DX	Special Service	8.5	62W	80.0	T3	Wire Terminals	C-6	0.29	1.14	150	304
	44152			10		1962DZ	Special Service	8.5	62W	80.0	T3	Wire Terminals	C-6	0.29	1.14	150	304
	13667			10		1962TY	Medical	8.5	62W	110.0	T3	Wire Terminals	C-6	0.29	1.14	50	304
	28034			10		1968	Aircraft	28.0	25W	15.0	T3	Double Slide	C-2V	0.41	1.17	500	13,304
	41938			100		1970X	Aircraft	28.0	100W	140.0	T3	Special	CC-8		2.25	1000	13,304
	32780			10		1974	Instrument	6.0	20W	10.0	T3	Wire Terminals	C-6	0.29	1.14	10000	304
	38545			100		1978X	Aircraft	10.0	100W	130.0	T3	Bi-Pin (Special)	C-8		2.15	2000	304
	38627			10		1982	Aircraft	28.0	75W	11.0	T3	Single Contact Bayonet (BA15s)	CC-8	1.06	1.88	1000	13,304
	21061			10		1982SP	Aircraft	28.0	75W	107.0	T3	Single Contact Bayonet (BA15s)	CC-6	1.00	1.97	2000	304
	39718			10		1983	Aircraft	10.0	100W	130.0	T4	2-Pin	C-8	1.25	1.80	2000	304
	44717			10		1986	Aircraft	28.0	250W	600.0	T4	Wire Terminals	CC-6	1.03	2.00	100	304
	47695			10		1987	Aircraft	28.0	150W	240.0	T4	Double Contact Bayonet (BA15d)	CC-6	1.18	2.44	700	304
	38535			10		1988	Aircraft	10.0	100W	130.0	T3	Special Wire Leads	C-8		2.15	2000	304
12326	19280		48	10		2040	Auto	12.8	.625A	10.5	T2 1/4	Wedge (W2.1x9.5d)	C-6	0.40	1.25	500	306
12296	44760	18620	48	50	500	2057	Auto, Stop, signal	12.8/14.0	2.1/.48A	32.0/2.0	S8	Double Contact Index (BAY15d)	C-6/C-6	1.25	2.00	1200/ 5000	
23339			48			2057 LL	Auto, Long Life	12.8/14.0	2.1/.48A	32.0/2.0	S8	Double Contact Index (BAY15d)	C-6/C-6	1.25	2.00	2400/ 10000	
89237			48			2057 NH	Auto, Nighthawk™	12.8/14.0	2.1/.48A	32.0/2.0	S8	Double Contact Index (BAY15d)	C-6/C-6	1.25	2.00		
12312	44763		48	50		2057NA	Auto, Amber	12.8/14.0	2.1/.48A	24.0/1.5	S8	Double Contact Index (BAY15d)	C-6/C-6	1.25	2.00	1200/ 5000	
47799			48			2057NA LL	Auto, Amber, Long Life	12.8/14.0	2.1/.48A	24.0/1.5	S8	Double Contact Index (BAY15d)	C-6/C-6	1.25	2.00	2400/ 10000	
71892			48			2057NA NH	Auto, Amber, Nighthawk™	12.8/14.0	2.1/.48A	24.0/1.5	S8	Double Contact Index (BAY15d)	C-6/C-6	1.25	2.00		
		12899			600	2058U	Truck	12.8/14.0	2.1/.48A	32.0/2.0	S8	Wire Terminals	C-6/C-6		1.81	1200/ 5000	113
	26697			10		2059	Aircraft	12.0	.833A	9.1	T2 1/2	Miniature Bayonet (Ba9s)	C-8	0.59	1.30	4000	304
	26698			10		2059X	Aircraft	12.0	.833A	8.0	T2 1/2	Miniature Bayonet (Ba9s)	C-8	0.59	1.30	4000	304
	21494			10		2074	Instrument	7.0	25W	24.0	T3	Wire Terminals	C-6	0.285	1.14	2700	304
	34763			50		2232	Aircraft	28.0	18W	18.0	S8	Single Contact Bayonet (BA15s)	CC-8	1.19	2.00	2000	
	26702			50		2232LL	Aircraft, Long Life	28.0	18W	18.0	S8	Single Contact Bayonet (BA15s)	CC-8	1.19	2.00	4000	
	81677			10		2232SB	Aircraft, Reflectorized	28.0	18W		S8	Single Contact Bayonet (BA15s)	CC-8	1.19	2.00	2000	
	36906			10		2233	Aircraft	28.0	21W	21.0	S8	Single Contact Bayonet (BA15s)	CC-8	1.19	2.00	2000	
12298	16291		48	50		2357	Auto, Stop, signal	12.8/14.0	2.2/.59A	40.0/3.0	S8	Double Contact Index (BAY15d)	C-6/C-6	1.25	2.00	400/ 5000	
67904			48			2357LL	Auto, Stop, signal, Long Life	12.8/14.0	2.2/.59A	40.0/3.0	S8	Double Contact Index (BAY15d)	C-6/C-6	1.25	2	800/ 10000	
71890			48			2357 NH	Auto, Nighthawk™	12.8/14.0	2.2/.59A	40.0/3.0	S8	Double Contact Index (BAY15d)	C-6/C-6	1.25	2.00		

For the most up-to-date product information, see www.gelighting.com.
All footnotes, warning and caution notices found at the end of this section (page 8-34).

Miniature Lamps (continued)

Order Code			Case Qty			GE Lamp No.	Primary Application	Volts	Amps (A) or Watts (W)	MSCP	Bulb	Base	Filament	LCL (in)	MOL (in)	Rated Life (hrs)	Footnotes, Warning and Caution Notices
Blister	Unit	Bulk	BP	Unit	Bulk												
12299	15698		48	50		2357NA	Auto, Amber	12.8/14.0	2.2/.59A	30.0/2.2	S8	Double Contact Index (BAY15d)	C-6	1.25	2.00	400/ 5000	
	18047			10		2396	Auto, Stop	12.8	2.23A	40.0	S8	Single Contact Bayonet (BA15s)	C-6	1.25	2.00	400	
27560			48			2397	Auto, Stop, signal	12.8/14.0	2.23/.48A	40.0/2.0	S8	Double Contact Index (BAY15d)	C-6/C-6	1.25	2.00	400/ 5000	
		19792			100	2556	Aircraft	28.0	200W	525.0	T3	2-Pin	CC-6	0.87	1.46	50	304
		19566			100	2586	Aircraft	28.0	250W	600.0	T4	2-Pin with Insulation Leads	CC-6	1.30	1.90	100	304
	43805			10		2604X	Instrument, Lens end	5.0	2.0A		TL2 3/4	2-Pin (G4)	C-6		1.18	5000	124,128,306
	36508			10		3011	Aircraft	28.0	1.29A	44.0	S11	Single Contact Bayonet (BA15s)	C-2V	1.25	2.38	1000	13
12305	18389		48	50		3057	Auto, Stop, signal	12.8/14.0	2.1/.48A	32.0/2.0	S8	Plastic Wedge	C-6/C-6	1.10	2.09	1200/ 5000	
26378			48			3057 LL	Auto, Long Life	12.8/14.0	2.1/.48A	32.0/2.0	S8	Plastic Wedge	C-6/C-6	1.10	2.09	2000/ 10000	
89243			48			3057 NH	Auto, Nighthawk™	12.8/14.0	2.1/.48A	32.0/2.0	S8	Plastic Wedge	C-6/C-6	1.10	2.09		
12313	18391		48	50		3057NA	Auto, Amber	12.8/14.0	2.1/.48A	24.0/1.5	S8	Plastic Wedge	C-6/C-6	1.10	2.09	1200/ 5000	
	14698			10		3078	Aircraft	10.0	100W	95.0	T3	Special	C-8	1.10	2.15	4500	304
23028			48			3155	Auto, Signal	12.8	1.60A	21.0	S8	Plastic Wedge	C-6	1.10	2.09	1500	
12351	21863		48	50		3156	Auto, Stop	12.8	2.1A	32.0	S8	Plastic Wedge	C-6	1.10	2.09	1200	
27565			48			3156 LL	Auto, Long Life	12.8	2.1A	32.0	S8	Plastic Wedge	C-6	1.10	2.09	2000	
71898			48			3156 NH	Auto, Nighthawk™	12.8	2.1A	32.0	S8	Plastic Wedge	C-6	1.10	2.09		
12306	17172		48	50		3157	Auto, Stop, signal	12.8/14.0	2.1/.59A	32.0/3.0	S8	Plastic Wedge	C-6/C-6	1.10	2.09	1200/ 5000	
26377			48			3157 LL	Auto, Long Life	12.8/14.0	2.1/.59A	32.0/3.0	S8	Plastic Wedge	C-6/C-6	1.10	2.09	2000/ 10000	
89244			48			3157 NH	Auto, Nighthawk™	12.8/14.0	2.1/.59A	32.0/3.0	S8	Plastic Wedge	C-6/C-6	1.10	2.09		
12314	17173		48	50		3157NA	Auto, Amber	12.8/14.0	2.1/.59A	24.0/2.2	S8	Plastic Wedge	C-6/C-6	1.10	2.09	1200/ 5000	
26380			48			3157NA LL	Auto, Amber, Long Life	12.8/14.0	2.1/.59A	24.0/2.2	S8	Plastic Wedge	C-6/C-6	1.10	2.09	2000/ 10000	
71893			48			3157NA NH	Auto, Amber, Nighthawk™	12.8/14.0	2.1/.59A	24.0/2.2	S8	Plastic Wedge	C-6/C-6	1.10	2.09		
14387	22525		48	50		3357/3457	Auto, Stop, signal	12.8/14.0	2.1/.59A	40.0/3.0	S8	Plastic Wedge	C-6/C-6	1.10	2.09	400/ 5000	
26379			48			3357/ 3457 LL	Auto, Long Life	12.8/14.0	2.1/.59A	40.0/3.0	S8	Plastic Wedge	C-6/C-6	1.10	2.09	800/ 10000	
71901			48			3457NH	Auto, Nighthawk™	12.8/14.0	2.1/.59A	40.0/3.0	S8	Plastic Wedge	C-6/C-6	1.10	2.09		
14388	22526		48	50		3357NA/ 3457NA	Auto, Amber	12.8/14.0	2.1/.59A	30.0/2.2	S8	Plastic Wedge	C-6/C-6	1.10	2.09	400/ 5000	
67910			48			3357NALL/ 3457NALL	Auto, Amber, Long Life	12.8/14.0	2.1/.59A	30.0/2.2	S8	Plastic Wedge	C-6/C-6	1.1	2.09	800/ 10000	
25834			48			3496	Auto, Japanese	12.8/14.0	2.1/.59A	43.0/3.0	T7	Double Contact Index (BAY15d)	C-6/C-6		2.00	600/ 5000	
25835			48			3497	Auto, Japanese	12.8	2.1A	45.0	T7	Single Contact Bayonet (BA15s)	C-6		2.00	600	
25837			48			3652	Auto, Japanese	13.5	.37A	6.0	T3 1/4	Wedge (W2.1x9.5d)			1.06	700	
15657			48			4157LL	Auto, Stop, signal	12.8/14.0	2.23/.59A	32.0/3.0	S8	Plastic Wedge	C-6/C-6	1.10	2.09	3600/ 10000	
47458			48			4157NA LL	Auto, Stop, signal, Amber	12.8/14.0	2.23/.59A	24.0/2.2	S8	Plastic Wedge	C-6/C-6	1.10	2.09	3600/ 10000	
	28154			24		5004 CW	Aircraft-Cool White	A.C.	4W	11.9	T5	Miniature Pinless			6.00	7500	32,162,309
	28155			24		5004 WW	Aircraft-Warm White	A.C.	4W	11.1	T5	Miniature Pinless			6.00	7500	32,162,309
	28160			24		5008CW	Aircraft-Cool White	A.C.	8W	35.4	T5	Miniature Pinless			12.00	7500	32,162,309
	28163			24		5008WW	Aircraft-Warm White	A.C.	8W	34.6	T5	Miniature Pinless			12.00	7500	32,162,309
	28168			24		5013CW	Aircraft-Cool White	A.C.	13W	65.2	T5	Miniature Pinless			21.00	7500	32,162,309
	28169			24		5013WW	Aircraft-Warm White	A.C.	13W	62.8	T5	Miniature Pinless			21.00	7500	32,162,309
	27367			24		5104CW	Aircraft-Cool White	A.C.	4W	11.9	T5	Miniature Bi-Pin			6.00	7500	32,162,309
	28173			24		5104 WW	Aircraft-Warm White	A.C.	4W	11.1	T5	Miniature Bi-Pin			6.00	7500	32,162,309
	12774			24		5106CW	Aircraft-Cool White	A.C.	6W	24.7	T5	Miniature Bi-Pin			9.00	7500	32,162,309
	33612			24		5106WW	Aircraft-Warm White	A.C.	6W	23.9	T5	Miniature Bi-Pin			9.00	7500	32,162,309
	27466			24		5108CW	Aircraft-Cool White	A.C.	8W	35.4	T5	Miniature Bi-Pin			12.00	7500	32,162,309
	28175			24		5108 WW	Aircraft-Warm White	A.C.	8W	34.6	T5	Miniature Bi-Pin			12.00	7500	32,162,309
	12775			24		5113CW	Aircraft-Cool White	A.C.	13W	65.2	T5	Miniature Bi-Pin			21.00	7500	32,162,309
	28178			24		5113 WW	Aircraft-Warm White	A.C.	13W	62.8	T5	Miniature Bi-Pin			21.00	7500	32,162,309
		29897			1000	6034BP	Aircraft	28.0	.024A	0.15	T1 3/4	Bi-Pin (M-23)	C-2F		0.64	5000	
		29895			1000	6034BPGPL	Aircraft	28.0	.024A	0.15	T1 3/4	BI-Pin (M-23)	C-2F		0.64	5000	
		87360			1000	6832	Aircraft	5.0	.06A	0.05	T1	Short Wire Terminal	C-2R		0.14	100000	
		87351			1000	6832AS15	Aircraft	5.0	.06A	0.05	T1	Short Wire Terminal	C-2R		0.14	100000	
		87291			1000	6839	Aircraft	28.0	.024A	0.15	T1	Sub-Midget Flanged	CC-2F		0.36	16000	
		29893			1000	6839BPE	Aircraft	28.0	.024A	0.15	T1	BI-Pin (M-23)	CC-2F		0.35	16000	
		29894			1000	6839BPEGPL	Aircraft	28.0	.024A	0.15	T1	BI-Pin (M-23)	CC-2F		0.35	16000	
		87274			1000	7132AS15	Aircraft	5.0	.075A	0.09	T1	Short Wire Terminal	C-2R		0.14	40000	

For the most up-to-date product information, see www.gelighting.com.
All footnotes, warning and caution notices found at the end of this section (page 8-34).

Miniature Lamps (continued)

Order Code			Case Qty			GE Lamp No.	Primary Application	Volts	Amps (A) or Watts (W)	MSCP	Bulb	Base	Filament	LCL (in)	MOL (in)	Rated Life (hrs)	Footnotes, Warning and Caution Notices
Blister	Unit	Bulk	BP	Unit	Bulk												
		87402			1000	**7152**	Aircraft	5.0	.115A	0.15	T1	Short Wire Terminal	C-2R		0.14	40000	
		97548			1000	**7152AS15**	Aircraft	5.0	.115A	0.15	T1	Short Wire Terminal	C-2R		0.14	40000	
	28926			50		**7387**	Indicator	28.0	.04A	0.3	T1 3/4	Bi-Pin (M-23)	C-2F	0.50	0.61	7000	79
26200			48			**7440**	Auto, Japanese Vehicles	13.5	1.85A	37.0	T7	Wedge (103x16DQ)	C-6		1.75	300	
67905			48			**7440LL**	Auto, Japanese Vehicles, Long Life	13.5	1.85A	37	T7	Wedge (103x16DQ)	C-6		1.75	600	
26201			48			**7443**	Auto, Japanese Vehicles	13.5/13.5	1.85/.4A	35.0/3.0	T7	Wedge (103x16DQ)	C-6/C-6		1.75	500/1000	
67906			48			**7443LL**	Auto, Japanese Vehicles, Long Life	13.5/13.5	1.85/.4A	35.0/3.0	T7	Wedge (103x16DQ)	C-6/C-6		1.75	1000/2000	
89248			48			**7443 NH**	Auto, Nighthawk™	13.5/13.5	1.85/.4A	35.0/3.0	T7	Wedge (103x16DQ)	C-6/C-6		1.75		
22432	**22389**	**14542**	48	100	200	**9003/HB2**	Auto headlamp	12.8/12.8	60/55W	119.0/72.0	T4 3/4	P43T-38	C-8/C-8	1.12	3.62	150/800	4,306
78935			48			**9003 LL**	Auto headlamp, Long Life	12.8/12.8	67/60W	119.0/72.0	T4 3/4	P43T-38	C-8/C-8	1.12	3.62	300/1600	4,306
25107			12			**9003 NH**	Auto, Nighthawk™	12.8/12.8	67/60W	119.0/72.0	T4 3/4	P43T-38	C-8/C-8	1.12	3.62	160/260	4,306
25150			24			**9003 NH**	Auto, Nighthawk™	12.8/12.8	67/60W	119.0/72.0	T4 3/4	P43T-38	C-8/C-8	1.12	3.62	160/260	4,306
89139			24			**9003 NHS**	Auto, Nighthawk™ Sport	12.8/12.8	67/60W	119.0/72.0	T4 3/4	P43T-38	C-8/C-8	1.12	3.62	100/200	4,306
89230			12			**9003 NHS**	Auto, Nighthawk™ Sport	12.8/12.8	67/60W	119.0/72.0	T4 3/4	P43T-38	C-8/C-8	1.12	3.62	100/200	4,306
66004			3			**9003 NHS**	Auto, Nighthawk™ Sport	12.8/12.8	67/60W	119.0/72.0	T4 3/4	P43T-38	C-8/C-8	1.12	3.62	100/200	4,306
75814			12			**9003 NHP**	Auto, Nighthawk™ Platinum	12.8/12.8	67/60W	119.0/72.0	T4 3/4	P43T-38	C-8/C-8	1.12	3.62	125/125	4,306
69861			12			**9003 NHX**	Auto, Nighthawk™ Xenon	12.8/12.8	67/60W	119.0/72.0	T4 3/4	P43T-38	C-8/C-8	1.12	3.62	125/125	4,306
18508	**13382**		48	100		**9004/HB1**	Auto headlamp	12.8/12.8	65/45A	95.0/55.0	T4 3/4	Axial Plastic Prefocus	C-6/C-6	1.75	4.17	150/320	4,306
13993	**11249**	**20559**	48	100	250	**9004 LL**	Auto, Long Life	12.8/12.8	65/47W	95.0/55.0	T4 3/4	Axial Plastic Prefocus	C-6/C-6	1.75	4.17	150/850	4,306
25106			12			**9004 NH**	Auto, Nighthawk™	12.8/12.8	65/45A	95.0/55.0	T4 3/4	Axial Plastic Prefocus	C-6/C-6	1.75	4.17	150/225	4,306
25149			24			**9004 NH**	Auto, Nighthawk™	12.8/12.8	65/45A	95.0/55.0	T4 3/4	Axial Plastic Prefocus	C-6/C-6	1.75	4.17	150/225	4,306
97698			24			**9004 NHS**	Auto, Nighthawk™ Sport	12.8/12.8	65/45A	95.0/55.0	T4 3/4	Axial Plastic Prefocus	C-6/C-6	1.75	4.17	97/178	4,306
97699			12			**9004 NHS**	Auto, Nighthawk™ Sport	12.8/12.8	65/45A	95.0/55.0	T4 3/4	Axial Plastic Prefocus	C-6/C-6	1.75	4.17	97/178	4,306
75815			12			**9004 NHP**	Auto, Nighthawk™ Platinum	12.8/12.8	65/45A	95.0/55.0	T4 3/4	Axial Plastic Prefocus	C-6/C-6	1.75	4.17	50/150	4,306
18509	**13384**	**36431**	48	100	200	**9005/HB3**	Auto headlamp	12.8	65W	135.0	T4	Right Angle (P20d)	C-8	1.24	3.13	800	4,306
25105			12			**9005 NH**	Auto, Nighthawk™	12.8	65W	135.0	T4	Right Angle (P20d)	C-8	1.24	3.13	340	4,306
25148			24			**9005 NH**	Auto, Nighthawk™	12.8	65W	135.0	T4	Right Angle (P20d)	C-8	1.24	3.13	340	4,306
89140			24			**9005 NHS**	Auto, Nighthawk™ Sport	12.8	65W	135.0	T4	Right Angle (P20d)	C-8	1.24	3.13	340	4,306
89232			12			**9005 NHS**	Auto, Nighthawk™ Sport	12.8	65W	135	T4	Right Angle (P20d)	C-8	1.24	3.13	120	4,306
75816			12			**9005 NHP**	Auto, Nighthawk™ Platinum	12.8	65W	135	T4	Right Angle (P20d)	C-8	1.24	3.13	100	4,306
69862			12			**9005 NHX**	Auto, Nighthawk™ Xenon	12.8	65W	135	T4	Right Angle (P20d)	C-8	1.24	3.13	100	4,306
45866			48			**9005 XS LL**	Auto, Axial Base, Long Life	12.8	65W	135.0	T4	Axial Plastic	C-8	1.24	3.13	700	4,306
18510	**13397**	**36432**	48	100	200	**9006/HB4**	Auto headlamp	12.8	51W	80.0	T4	Right Angle (P22d)	C-8	1.24	3.13	850	4,306
25104			12			**9006 NH**	Auto, Nighthawk™	12.8	55W	80.0	T4	Right Angle (P22d)	C-8	1.24	3.13	1200	4,306
25147			24			**9006 NH**	Auto, Nighthawk™	12.8	55W	80.0	T4	Right Angle (P22d)	C-8	1.24	3.13	1200	4,306
97700			24			**9006 NHS**	Auto, Nighthawk™ Sport	12.8	55W	80.0	T4	Right Angle (P22d)	C-8	1.24	3.13	400	4,306
97701			12			**9006 NHS**	Auto, Nighthawk™ Sport	12.8	55W	80.0	T4	Right Angle (P22d)	C-8	1.24	3.13	400	4,306
75817			12			**9006 NHP**	Auto, Nighthawk™ Platinum	12.8	55W	80	T4	Right Angle (P22d)	C-8	1.24	3.13	125	4,306
69863			12			**9006 NHX**	Auto, Nighthawk™ Xenon	12.8	55W	80	T4	Right Angle (P22d)	C-8	1.24	3.13	125	4,306
45868			48			**9006 XS LL**	Auto, Axial Base, Long Life	12.8	55W	80.0	T4	Axial Plastic	C-8	1.24	3.13	1500	4,306
22388	**20551**	**20552**	48	100	250	**9007/HB5**	Auto headlamp	12.8/12.8	65/55W	107.0/79.0	T4 3/4	Axial Plastic Prefocus	C-8/C-8	1.75	4.17	150/1,100	4,306
78639			48			**9007 LL**	Auto headlamp, Long Life	12.8/12.8	65/55W	107.0/79.0	T4 3/4	Axial Plastic Prefocus	C-8/C-8	1.75	4.17	300/2200	4,306
25103			12			**9007 NH**	Auto, Nighthawk™	12.8/12.8	65/55W	107.0/79.0	T4 3/4	Axial Plastic Prefocus	C-8/C-8	1.75	4.17	250/250	4,306
25146			24			**9007 NH**	Auto, Nighthawk™	12.8/12.8	65/55W	107.0/79.0	T4 3/4	Axial Plastic Prefocus	C-8/C-8	1.75	4.17	250/250	4,306
97696			24			**9007 NHS**	Auto, Nighthawk™ Sport	12.8/12.8	65/55W	107.0/79.0	T4 3/4	Axial Plastic Prefocus	C-8/C-8	1.75	4.17	131/370	4,306

For the most up-to-date product information, see www.gelighting.com.
All footnotes, warning and caution notices found at the end of this section (page 8-34).

Miniature Lamps (continued)

Order Code			Case Qty															
Blister	Unit	Bulk	BP	Unit	Bulk	GE Lamp No.	Primary Application	Volts	Amps (A) or Watts (W)	MSCP	Bulb	Base	Filament	LCL (in)	MOL (in)	Rated Life (hrs)	Footnotes, Warning and Caution Notices
97697			12			9007 NHS	Auto, Nighthawk™ Sport	12.8/12.8	65/55W	107.0/79.0	T4 3/4	Axial Plastic Prefocus	C-8/C-8	1.75	4.17	131/370	4,306
75818						9007 NHP	Auto, Nighthawk™ Platinum	12.8/12.8	65/55W	107.0/79.0	T4 3/4	Axial Plastic Prefocus	C-8/C-8	1.75	4.17	90/150	4,306
69864			12			9007 NHX	Auto, Nighthawk™ Xenon	12.8/12.8	65/55W	107.0/79.0	T4 3/4	Axial Plastic Prefocus	C-8/C-8	1.75	4.17	90/150	4,306
71342			48			9008(H13)	Auto headlamp	12.8/12.8	65/55w	119.0/79.6	T4 5/8	P26.4t	C-8/C-8	1.00	3.54	320/150	4,306
78653			12			9008(H13) NH	Auto headlamp, Nighthawk™	12.8/12.8	65/55w	119.0/79.6	T4 5/8	P26.4t	C-8/C-8	1	3.54	320/150	4,306
78654			12			9008(H13) NHS	Auto headlamp, Nighthawk™ Sport	12.8/12.8	65/55w	119.0/79.6	T4 5/8	P26.4t	C-8/C-8	1	3.54	320/150	4,306
62430			12			9008(H13) NHP	Auto headlamp, Nighthawk™ Platinum	12.8/12.8	65/55w	119.0/79.6	T4 5/8	P26.4t	C-8/C-8	1	3.54	320/150	4,306
40843		42382	48		200	9145/H10	Auto Fog	12.8	45W	65.0	T4	PY20D	C-8	1.24	3.01	1500	4,306
47461			48			58540	Auto, Halogen	13.5	.37A	63.0	T3	Miniature Bayonet (Ba9s)	C-2R	0.59	1.22	240	308
	26696			10		A-103	Aircraft	28.0	50W	60.0	T3	Bi-Pin (Special)	CC-8		1.87	1000	304
	12064			10		B1A	Neon Glow-NE51	120.0	1/25W		T3 1/4	Miniature Bayonet (Ba9s)			1.19	15000	164
	12065			10		B2A	Neon Glow-NE51H	120.0	1/7W		T3 1/4	Miniature Bayonet (Ba9s)			1.19	25000	164
	31675			10		B7A	Neon Glow-NE45	120.0	1/4W		T4 1/2	Candelabra Screw (E12)			1.53	7500	164
23312			48			C5W	Auto. ECE C5W	13.5	.37A	3.6	T3 1/2	SV8.5MM			1.45	450	
	78734			12		D1S	Auto Discharge-Projector	85	35W					1.06		3000	1,2,310
	80851	70603		24	144	D2R	Auto Discharge-Reflector	85.0	35W	114.0	T3	P32d-3		1.06	3.09	1000	1,2,310
	25088	70605		24	144	D2S	Auto Discharge-Projector	85.0	35W	254.0	T3	P32d-2		1.06	3.09	1000	1,2,310
	90057			32		D2S BLUE	Non-Auto Discharge	85.0	35W		T3	P32d-2		1.06	3.09	1000	1,2,310
	90059			32		D2S SUPERBLUE	Non-Auto Discharge	85.0	35W		T3	P32d-2		1.06	3.09	1000	1,2,310
25323			48			DE3021	Auto	14.0	.24A	2.0	T2 1/4	#10 Spade			1.15	1000	
12353			48			DE3022	Auto	13.0	.38A	3.0	T2 1/4	#10 Spade			1.18	1000	
12354	12084	28858	48	50	5000	DE3175	Auto	13.0	.77A	9.6	T3 1/4	SV8.5MM			1.25	400	
67909			48			DE3175LL	Auto, Long Life	13	.77A	9.6	T3 1/4	SV8.5MM			1.25	800	
89245			48			DE3175 NH	Auto, Nighthawk™	13.0	.77A	9.6	T3 1/4	SV8.5MM			1.25		
	12085			10		DE 3425	Auto	13.0	.77A	9.6	T4	SV8.5MM			1.50	400	
23324			48			DE7576	Strip Lighting	13.5	.74A	9.8	T3 1/2	SV8.5MM			1.65	200	
40336	27328	32376	48	10	300	H1-55	Auto, GE 50310/1	13.2	62W	123.0	T3 1/2	P14.5S	C-8	1.08	2.66	225	308
25159			24			H1-55 NH	Auto, Nighthawk™	13.2	62W	123.0	T3 1/2	P14.5S	C-8	1.08	2.66	1000	308
25092			12			H1-55 NH	Auto, Nighthawk™	13.2	62W	123.0	T3 1/2	P14.5S	C-8	1.08	2.66	1000	308
94193			12			H1-55NHP	Auto, Nighthawk™ Platinum	13.2	62W	123	T3 1/2	P14.5S	C-8	1.08	2.66	250	308
69857			12			H1-55NHX	Auto, Nighthawk™ Xenon	13.2	62W	123	T3 1/2	P14.5S	C-8	1.08	2.66	250	308
78134			12			H1-55NHP	Auto, Nighthawk™ Platinum	13.2	62W	123	T3 1/2	P14.5S	C-8	1.08	2.66	250	308
	27569			10		H1-70	Auto, GE50230/1	28.0	80W	151.0	T3 1/2	P14.5S	C-8	1.08	2.46	600	308
	27330			10		H2-55	Auto, GE 50410	13.2	62W	143.0	T3 1/2	X511	C-8	0.48	1.22	225	308
		23442			400	H3-35	CIM, GE 50390	13.2	40W	60.0	T3 1/2	PK22S	C-6	0.71	1.65	200	308
12339	27331	22132	48	10	400	H3-55	Auto, GE 50340	12	62W	115.0	T3 1/2	PK22S	C-6	0.71	1.65	225	308
		23445			400	H3-55D	CIM, GE 50340D	13.2	62W	111.0	T3 1/2	PK22S	C-6	0.71	1.65	600	308
		35044			400	H3-55LL	Auto, GE50340, Long Life	13.2	64W	106.0	T3 1/2	PK22S	C-6	0.71	1.65	2000	308
		23428			400	H3-65/28V	CIM, GE 52590D	28.0	66W	102.0	T3 1/2	PK22S	C-6	0.71	1.65	1000	308
	27332			10		H3-70/28V	CIM, GE50350	28.0	75W	135.0	T3 1/2	PK22S	CC-6	0.71	1.65	225	308
12341			48			H3-100	Off Road, GE52130	13.2	92W	187.0	T3 1/2	PK22S	C-6	0.71	1.65	100	308
18132	27334	22133	48	10	200	H4-60/55	Auto H4.GE 50440	13.2/13.2	71/66W	138.0/80.0	T5	P43T-38	C-8/C-8	1.12	3.62	225/900	308
25094			24			H4-60 NH	Auto, Nighthawk™	13.2/13.2	71/66W	138.0/80.0	T5	P43T-38	C-8/C-8	1.12	3.62	300	
75820			12			H4-60NHP	Auto, Nighthawk™ Platinum	13.2/13.2	71/66W	138.0/80.0	T5	P43T-38	C-8/C-8	1.12	3.62	250/250	
69858			12			H4-60NHX	Auto, Nighthawk™ Xenon	13.2/13.2	71/66W	138.0/80.0	T5	P43T-38	C-8/C-8	1.12	3.62	250/250	
	27342	93732		10	200	H4-75/70/24V	Bus, GE 50450	24.0/24.0	80/73W	151.0/95.0	T5	P43T-38	C-8/C-8	1.14	3.62	150/300	308
26374		38641	48		200	H7-55	Auto, ECE/DOT, GE58520	13.2	57W	115.0	T3 1/2	PX26D	C-8	0.98	2.36	500	308
78640			48			H7-55 LL	Auto, ECE/DOT, GE58520, Long Life	13.2	57W	115	T3 1/2	PX26D	C-8	0.98	2.36	1000	308
		35755			200	H7-55LL	Auto, ECE/DOT	13.2	57W	115.0	T3 1/2	PX26D	C-8	0.98	2.36	610	
25160			24			H7-55 NH	Auto, Nighthawk™	13.2	57W	115.0	T3 1/2	PX26D	C-8	0.98	2.36	250	

For the most up-to-date product information, see www.gelighting.com.
All footnotes, warning and caution notices found at the end of this section (page 8-34).

Miniature Lamps (continued)

Order Code			Case Qty														
Blister	Unit	Bulk	BP	Unit	Bulk	GE Lamp No.	Primary Application	Volts	Amps (A) or Watts (W)	MSCP	Bulb	Base	Filament	LCL (in)	MOL (in)	Rated Life (hrs)	Footnotes, Warning and Caution Notices
89141			24			**H7-55 NHS**	Auto, Nighthawk™ Sport	13.2	57W	115.0	T3 1/2	PX26D	C-8	0.98	2.36	130	308
89235			12			**H7-55 NHS**	Auto, Nighthawk™ Sport	13.2	57W	115	T3 1/2	PX26D	C-8	0.98	2.36	130	308
66006			3			**H7-55 NHS**	Auto, Nighthawk™ Sport	13.2	57W	115	T3 1/2	PX26D	C-8	0.98	2.36	130	308
75821			12			**H7-55NHP**	Auto, Nighthawk™ Platinum	13.2	57W	115	T3 1/2	PX26D	C-8	0.98	2.36	130	308
69860			12			**H7-55NHX**	Auto, Nighthawk™ Xenon	13.2	57W	115	T3 1/2	PX26D	C-8	0.98	2.36	130	308
29047		**15765**	48		140	**H8**	Auto, ECE Fog	13.2	40W	64.0	T3 1/2	PGJ19-1	C-8	1.06	2.63	400	2,308
29049		**15827**	48		140	**H9**	Auto, ECE headlamp	13.2	65W	167.0	T3 1/2	PGJ19-5	C-8	1.08	2.63	125	2,308
23762		**15828**	48		140	**H11**	Auto, ECE headlamp	13.2	55W	107.0	T3 1/2	PGJ19-2	C-8	1.07	2.63	550	2,308
89255		**15963**	48		140	**H11LL**	Auto, ECE headlamp. Long Life	13.2	55W	107.0	T3 1/2	PGJ19-2	C-8	1.07	2.63	1100	4,308
62267			12			**H11-55NHP**	Auto, Nighthawk™ Platinum	13.2	55W	107	T3 1/2	PGJ19-2	C-8	1.07	2.63	125	4,308
69865			12			**H11-55NHX**	Auto, Nighthawk™ Xenon	13.2	55W	107	T3 1/2	PGJ19-2	C-8	1.07	2.63	125	4,308
76189			12			**H11 C55NHP**	Auto, Nighthawk™ Platinum	13.2	55W	107	T3 1/2	PGJ19-2	C-8	1.07	2.63	125	4,308
71342			48			**H13 (9008)**	Auto headlamp	12.8/12.8	65/55W	119.0/79.6	T4 5/8	P26.4t	C-8/C-8	1.00	3.54	320/150	308
78653			12			**H13 (9008) NH**	Auto headlamp, Nighthawk™	12.8/12.8	65/55w	119.0/79.6	T4 5/8	P26.4t	C-8/C-8	1	3.54	320/150	4,306
78654			12			**H13 (9008) NHS**	Auto headlamp, Nighthawk™ Sport	12.8/12.8	65/55w	119.0/79.6	T4 5/8	P26.4t	C-8/C-8	1	3.54	320/150	4,306
62430			12			**H13 (9008) NHP**	Auto headlamp, Nighthawk™ Platinum	12.8/12.8	65/55w	119.0/79.6	T4 5/8	P26.4t	C-8/C-8	1	3.54	320/150	4,306
22961			48			**KPR102**	Flashlight-2D Krypton	2.4	.7A	3.0	B3 1/2	Single Contact Miniature Flanged	C-2R	0.25	48.00	15	116
23153			48			**KPR 113**	Flashlight-4D Krypton	4.8	.47A	4.1	B3 1/2	Single Contact Miniature Flanged	C-2R	0.25	1.25	20	116
23306			48			**P21W**	Auto, ECE.Stop	13.5	1.85A	36.6	S8	Single Contact Bayonet (BA15s)	C-6	1.25	2.00	250	
89247			48			**P21W NH**	Auto, Nighthawk™	13.5	1.85A	36.6	S8	Single Contact Bayonet (BA15s)	C-6	1.25	2.00		
20695		**30852**	48		1000	**P21W LL**	Auto, Long Life	13.5	1.85A	36.6	S8	Single Contact Bayonet (BA15s)	C-6	1.25	2.00	300	
67896			48			**P21W LL**	Auto, Long Life	13.5	1.85A	36.6	S8	Single Contact Bayonet (BA15s)	C-6	1.25	2	300	
	40778			10		**P21W 24V**	Bus, Stop	28.0	1.0A	36.6	S8	Single Contact Bayonet (BA15s)	C-6	1.25	2.00	150	
27561			48			**P21/4W**	Auto, ECE, Stop, tail	13.5/13.5	1.85/.37A	35.0/1.19	S8	Double Contact Index (BAY15d)	C-6/C-6	1.25	2.00	100/100	
23303		**30856**	48		1000	**P21/5W**	Auto, ECE, Stop, tail	13.5/13.5	1.85/.44	35.0/2.78	S8	Double Contact Index (BAY15d)	C-6/C-6	1.25	2.00	250 1000	
67894			48			**P21/5WLL**	Auto, ECE, Stop, tail, Long Life	13.5/13.5	1.85/.44	35.0/2.78	S8	Double Contact Index (BAY15d)	C-6/C-6	1.25	2	500/2000	
		21274			1000	**P21/5W LL**	Auto, Long Life	13.5/13.5	1.85/.44	35.0/2.78	S8	Double Contact Index (BAY15d)	C-6/C-6	1.25	2.00	600/3000	
89246			48			**P21/5W NH**	Auto, Nighthawk™	13.5/13.5	1.85/.44	35.0/2.78	S8	Double Contact Index (BAY15d)	C-6/C-6	1.25	2.00		
	27222	**23037**		10	1000	**PC168**	Auto Instrument	14.0	.35A	3.0	T3 1/4	Printed Circuit Socket	C-2F	0.45	1.11	1500	
	27221			10		**PC194**	Auto Instrument	14.0	.27A	2.0	T3 1/4	Printed Circuit Socket	C-2F	0.45	1.11	2500	
12675	**25181**		48	50		**PR2**	Flashlight-2D cells	2.4	.5A	0.8	B3 1/2	Single Contact Miniature Flanged	C-2R	0.25	1.25	15	116
12676	**25193**		48	50		**PR3**	Flashlight-3D cells	3.6	.5A	1.5	B3 1/2	Single Contact Miniature Flanged	C-2R	0.25	1.25	15	116
12677			48			**PR4**	Flashlight-2C cells	2.3	.27A	0.4	B3 1/2	Single Contact Miniature Flanged	C-2R	0.25	1.25	15	116
	25222			50		**PR6**	Flashlight-2D cells	2.5	.3A	0.5	B3 1/2	Single Contact Miniature Flanged	C-2R	0.25	1.25	30	116
	25235			50		**PR7**	Flashlight-3D cells	3.7	.3A	0.9	B3 1/2	Single Contact Miniature Flanged	C-2R	0.25	1.25	30	116
	25252			50		**PR12**	Flashlight-5D cells	6.0	.5A	3.1	B3 1/2	Single Contact Miniature Flanged	C-2R	0.25	1.25	15	116
12681	**25262**		48	50		**PR13**	Flashlight-4F cells	4.8	.5A	2.2	B3 1/2	Single Contact Miniature Flanged	C-2R	0.25	1.25	15	116
	25289			50		**PR18**	Flashlight-6D cells	7.2	.55A	5.5	B3 1/2	Single Contact Miniature Flanged	C-2R	0.25	1.25	3	116
41370		**18294**	48		500	**PY21W**	Auto, ECE, Stop, Tail, Amber	13.5	1.85A	22.3	S8	Single Contact Bayonet (BA15s)	C-6	1.25	2.00	250	
23314			48			**R5W**	Auto, ECE, GE2619	13.5	5W	4.0	G6	Single Contact Bayonet (BA15s)	C-2R	0.75	1.47		
23765		**30859**			2000	**R5WLL**	Auto, ECE	13.5	5W	4.0	G6	Single Contact Bayonet (BA15s)	C-2R	0.75	1.47	500	
23322		**35417**	48		2000	**R10W**	Auto, ECE, GE2641	13.5	10W	10.0	G6	Single Contact Bayonet (BA15s)	C-2R	0.75	1.47	400	
23318			48			**T4W**	Auto, ECE, GE2662	13.5	4W	2.8	T2 3/4	Miniature Bayonet (Ba9s)	C-2R	0.59	1.08	450	
	12756			50		**TEL/6PSB**	Telephone Indicator	6.0	.14A	550.0	T2	Tel. Slide No. 5	C-2V		1.11	20000	80
	12760			50		**TEL/12PSB**	Telephone Indicator	12.0	.17A	2000.0	T2	Tel. Slide No. 5	C-2F		1.11	12000	80
	29001			50		**TEL/24E2**	Telephone Indicator	24.0	.035A	600.0	T2	Tel. Slide No. 3	C-2F		1.69	7000	80
	12071			50		**TEL/24PSB**	Telephone Indicator	24.0	.073A	3000.0	T2	Tel. Slide No. 5	C-2F		1.11	10000	80
	12761			50		**TEL/28MB**	Telephone Indicator	28.0	.04A	0.3	T2 1/2	Miniature Bayonet (Ba9s)	C-2F		1.19	5000	80
	12072			50		**TEL/28PSB**	Telephone Indicator	28.0	.04A	1600.0	T2	Tel. Slide No. 5	C-2F		1.11	5000	80
	29041			50		**TEL/48C2**	Telephone Indicator	48.0	.035A	750.0	T2	Tel. Slide No. 3	C-2F		1.69	5000	80
	12075			50		**TEL/48PSB**	Telephone Indicator	48.0	.05A	1800.0	T2	Tel. Slide No. 5	C-7A		1.11	10000	80
	12076			50		**TEL/60MB**	Telephone Indicator	60.0	.05A	0.7	T2 1/2	Miniature Bayonet (Ba9s)	C-7A		1.19	7500	80
	12077			50		**TEL/60PSB**	Telephone Indicator	60.0	.05A	1800.0	T2	Tel. Slide No. 5	C-7A		1.11	7500	80

For the most up-to-date product information, see www.gelighting.com.
All footnotes, warning and caution notices found at the end of this section (page 8-34).

Miniature Lamps (continued)

Order Code			Case Qty			GE Lamp No.	Primary Application	Volts	Amps (A) or Watts (W)	MSCP	Bulb	Base	Filament	LCL (in)	MOL (in)	Rated Life (hrs)	Footnotes, Warning and Caution Notices
Blister	Unit	Bulk	BP	Unit	Bulk												
	12078			50		TEL/120MB	Telephone Indicator	120.0	.025A	0.4	T2 1/2	Miniature Bayonet (Ba9s)	CC-7A		1.19	7500	80
	12080			50		TEL/120PSB	Telephone Indicator	120.0	.025A	1000.0	T2	Tel. Slide No. 5	CC-7A		1.11	7500	80
27562		35030	48		2000	W3W	Auto, ECE	13.5	3W	1.8	T3 1/4	Wedge (W2.1x9.5d)	C-2V	0.50	1.06	1000	
27563		28759	48		2000	W5W	Auto, ECE	13.5	5W	4.0	T3 1/4	Wedge (W2.1x9.5d)	C-2V	0.50	1.06	300	
67895			48			W5WLL	Auto, ECE, Long Life	13.5	5W	4	T3 1/4	Wedge (W2.1x9.5d)	C-2V	0.5	1.06	600	
		26353			1000	W16W	Auto, ECE	13.5	16W	24.6	T5	Wedge (W2.1x9.5d)	C-2F	0.81	1.49	250	121
		20280			1000	W16W	Auto, ECE	13.5	16W	24.6	T5	Wedge (W2.1x9.5d)	C-2F	0.81	1.49	250	121
		20279			1000	WY5W	Auto, ECE, Amber	13.5	5W	3.0	T3 1/4	Wedge (W2.1x9.5d)	C-2V	0.50	1.06	300	

Sealed Beam and Automotive Lamps

Product Code		Quantity		GE Lamp No.	Bulb	Applications	Volts	Watts	MBCP	Base	MOL (in)	Rated Life (hrs)	Spread to 10% MBCP		Footnotes, Warning and Caution Notices
Unit	Bulk	Unit	Bulk										Horizontal	Vertical	
18511		6		4000	PAR46	Headlamp-Low beam	12.8/12.8	38/60	SAE	3 Contact Lugs	4.00	200/320			4
24327		12		4013	PAR46	Tractor, Flood	6.4	25	800	Screw Terminals	3.75	300	80°	20°	
	24338		60	4014	PAR36	Emergency Building Light	6.4	18	1500	Screw Terminals	2.75	200	50°	25°	
24369		12		4019	PAR46	Tractor	6.2	30	1200	Screw Terminals	3.75	300	Trapezoidal		23
38418		12		4040	PAR46	Truck, Low beam	12.8/12.8	38/60	SAE	3 Contact Lugs	4.00	300/500			4
39585	39586	12	60	4042	PAR36	Emergency Building Light	6.4	12	1100	Screw Terminals	2.75	150	45°	20°	
40588	40589	12	60	4044	PAR36	Emergency Building Light	12.0	12	1100	Screw Terminals	2.75	150	50°	25°	
10540	10541	12	60	4044-1	PAR36	Emergency Building Light	12.0	12	1100	Slip-on Terminals	2.75	150	50°	25°	
25051		12		4313	PAR36	Aircraft Landing	13.0	250	140000	Screw Terminals	2.75	25 h	16°	7°	302
39366	39367	12	60	4340	PAR36	Electric Truck Worklight	48.0	80	2500	Slip-on Terminals	2.75	400	Trapezoidal		15
39362	39363	12	60	4350	PAR36	Electric Truck Worklight	36.0	60	2100	Slip-on Terminals	2.75	400	Trapezoidal		15
12961		12		4402A	PAR36	CIM Signal	28.0	50	1000	Screw Terminals	2.75	400	50°	25°	
24425	24423	12	60	4405	PAR36	Spotlamp	12.8	30	50000	Screw Terminals	2.75	100	6°	5°	167
24430	24428	12	60	4406	PAR36	Tractor ,Flood	12.8	35	600	Screw Terminals	2.75	300	80°	30°	4
24439		12		4410	PAR36	Backup, Tractor Flood	12.8	35	600	Screw Terminals	2.75	300	80°	30°	4
24448	24443	12	60	4411	PAR36	Tractor	12.8	35	3000	Screw Terminals	2.75	300	Trapezoidal		4
37889	37890	12	60	4411-1	PAR36	Tractor	12.8	35	3000	Slip-on Terminals	2.75	300	Trapezoidal		4
29040		12		4411-3	PAR36	Tractor	12.8	35	3000	Combination	2.75	300	Trapezoidal		4
24454	24453	12	24	4412	PAR46	Fog	12.8	35	11000	Screw Terminals	3.75	300	40°	7°	167
24460	24459	12	24	4412A	PAR46	Fog, yellow	12.8	35	8800	Screw Terminals	3.75	300	40°	7°	167
22981	24464	12	24	4413	PAR46	Tractor ,Flood	12.8	35	1100	Screw Terminals	3.75	300	80°	20°	4
24478	24477	12	60	4414	PAR36	Garden	12.8	18	1500	Screw Terminals	2.75	300	50°	25°	
24487		12		4414R	PAR36	Warning Signal, Red Lens	12.8	18	275	Screw Terminals	2.75	300	50°	25°	
22982	24490	12	60	4415	PAR36	Fog	12.8	35	9000	Screw Terminals	2.75	300	40°	5°	167
24499	24497	12	60	4415A	PAR36	Truck Fog, Amber Lens	12.8	35	7000	Screw Terminals	2.75	300	40°	5°	167
22983	24503	12	60	4416	PAR36	Narrow Spot	12.8	30	35000	Screw Terminals	2.75	300	11°	4°	
	34901		60	4416-1	PAR36	Warning Signal, Narrow Spot	12.8	30	35000	Slip-on Terminals	2.75	300	11°	4°	
24506		12		4416A	PAR36	Signal, Amber	12.8	30	26000	Screw Terminals	2.75	300	11°	4°	
24513		12		4416R	PAR36	Signal, Red	12.8	30	4000	Screw Terminals	2.75	300	11°	4°	
24531	24525	12	24	4419	PAR46	Tractor	12.8	35	1600	Screw Terminals	3.75	300	Trapezoidal		4
24539		12		4421	PAR46	Truck	13.0	100	23000	Slip-on Terminals	3.75	300	50°	7°	109,167
24542		12		4422	PAR36	Tractor	12.8	35	600	Screw Terminals	2.75	300	75° Cone		4
24572		12		4434A	PAR46	Bus, Red Lens	12.8	40	1000	Screw Terminals	3.75	100	55°	25°	
24577	24576	12	24	4435	PAR46	Pin Spotlight	12.8	30	75000	Screw Terminals	3.75	100	5°	5°	167
24582		12		4436	PAR46	Signal	12.8	35	60000	Screw Terminals	3.75	300	10°	4°	
39932	39933	12	60	4440X	PAR36	Tractor	12.8/12.8	40/40	6000/4500	3 Contact Lugs	3.00	320/320	40°/33°	7°/9°	4
39748		12		4440X-1	PAR36	Tractor	12.8/12.8	40/40	6000/4500	3 Slip-on Terminals	2.75	320/320	40°/33°	7°/9°	4
37046	37047	12	60	4446	PAR36	Emergency Building Light	12.8	25	400	Screw Terminals	2.75	300	80°	80°	
40176		12		4460X	PAR36	Tractor	12.8/12.8	40/40	0	3 Screw Terminals	2.75	320/320	22°	13°	4
24592		12		4461	PAR36	Tractor	12.8	60	6000	Screw Terminals	2.7500 cm	300	Trapezoidal		4
24596		12		4466	PAR36	Tractor	12.8	60	1000	Screw Terminals	2.75	300	80°	30°	4
24613		12		4478	PAR46	CIM	13.0	60	1600	2 Contact Lugs	4.00	800	56°	32°	4
24627		12		4502	PAR36	Headlamp Military	28.0	50	10000	Screw Terminals	2.75	400	40°	7°	
24640	24638	12	60	4505	PAR36	Aircraft Navigation	28.0	50	45000	Screw Terminals	2.75	400	11°	5°	
24650	24649	12	60	4509	PAR36	Aircraft Landing	13.0	100	110000	Screw Terminals	2.75	25	12°	6°	167
41503		12		4509X	PAR36	Marine Spotlight	13.0	100	110000	Screw Terminals	2.75	25	12°	6°	167
11524		12		4509Y	PAR36	Emergency Vehicle	13.0	100		Screw Terminals	2.75	25	12°	6°	
24654	24653	12	60	4510	PAR36	Tractor	6.4	25	800	Screw Terminals	2.75	300	80°	20°	
24663	24661	12	60	4511	PAR36	Tractor	6.2	30	2300	Screw Terminals	2.75	300	Trapezoidal		23
24673	24671	12	60	4515	PAR36	Pin Spot	6.4	30	55000	Screw Terminals	2.75	100	5°	5°	167
24678		12		4516	PAR36	Narrow Spot	6.2	30	45000	Screw Terminals	2.75	300	9°	4°	

For the most up-to-date product information, see www.gelighting.com.
All footnotes, warning and caution notices found at the end of this section (page 8-34).

Sealed Beam and Automotive Lamps (continued)

Product Code		Quantity		GE Lamp							MOL	Rated Life	Spread to 10% MBCP		Footnotes, Warning
Unit	Bulk	Unit	Bulk	No.	Bulb	Applications	Volts	Watts	MBCP	Base	(in)	(hrs)	Horizontal	Vertical	and Caution Notices
24690		12		**4519**	PAR36	Marine	13.0	100	30000	Screw Terminals	2.75	25	40°	7°	
24700		12		**4522**	PAR46	Aircraft Landing	13.0	250	290000	Screw Terminals	3.13	25	12°	10°	92,138,167
24721		12		**4530**	PAR46	Signal, Flashing	26.0	139	100000	Screw Terminals	3.75	50	11°	11°	
24726		12		**4531**	PAR46	Headlamp, Military	12.5	40	30000	Screw Terminals	3.75	400	20°	5°	
19628		12		**4532**	PAR46	Aircraft	28.0/28.0	250/150	75000/14500	Screw Terminals	3.75	100/100	12°/16°	19°/19°	
24735		12	24	**4535**	PAR46	Pin Spot	6.4	30	95000	Screw Terminals	3.75	100	20°	4°	167
24742	**24775**	12		**4537**	PAR46	Aircraft Landing	13.0	100	200000	Screw Terminals	3.13	25	11°	6°	167
40822		12		**4537-2**	PAR46	Spotlamp	13.0	100	200000	Screw Terminals	3.13	25	11°	6°	
39022		12		**4537X**	PAR46	Marine	13.0	100	200000	Screw Terminals	3.13	25	11°	6°	167
24756		12		**4541**	PAR56	Aircraft Landing	28.0	450	470000	Screw Terminals	4.50	25	15°	11°	167,302
24764		12		**4543**	PAR56	Marine	12.5	100	250000	Screw Terminals	4.50	50	9°	5°	
24768		12		**4545**	PAR56	Marine, Hand Lantern	12.0	100	225000	Screw Terminals	4.50	100	9°	5°	167
24780	**24783**	12	60	**4546**	PAR36	Hand Lantern	4.7	2	6300	Screw Terminals	2.75	100	3°	3°	
24770		12		**4546-1**	PAR36	Hand Lantern	4.7	2	6300	Slip-on Terminals	2.75	100	3°	3°	
24795		12		**4551**	PAR46	Aircraft Taxiing	28.0	250	75000	Screw Terminals	3.75	25	50°	10°	138
40576		12		**4552**	PAR64	Aircraft Landing	28.0	250	500000	Screw Terminals	3.75	25	7°	8°	138,167
24799		12		**4553**	PAR46	Aircraft Landing	28.0	250	300000	Screw Terminals	3.13	25	11°	12°	138,167
24802		12		**4554**	PAR46	Aircraft Taxiing	28.0	450	90000	Screw Terminals	3.13	25	50°	16°	302
40581		12		**4557**	PAR64	Aircraft Landing	28.0/28.0	1000/400	540000/100000	3 Screw Terminals	3.75	25 /100	25°/100°	11°/25°	138,302
40578		12		**4559**	PAR64	Aircraft Landing	28.0	600	600000	Screw Terminals	3.75	25	11°	12°	138,167
24828		12		**4570**	PAR46	Aircraft Taxiing	28.0	150	32000	Screw Terminals	3.75	300	50°	9°	
24830		12		**4571**	PAR46	CIM Flood	28.0	150	7000	Screw Terminals	3.75	300	80°	25°	
24833		12		**4572**	PAR46	Military	28.0	150	4500	Screw Terminals	3.75	300	55°	55°	
25005	**25007**	12	24	**4578**	PAR46	CIM Flood	28.0	60	1600	2 Contact Lugs	4.00	800	55°	30°	
25009		12		**4579**	PAR46	CIM Headlamp	28.0/28.0	80/60	24000/11000	3 Contact Lugs	4.00	400/400	25°/7°	25°/7°	
24859		12		**4580**	PAR46	Aircraft Landing	28.0	450	400000	Screw Terminals	3.75	10	13°	14°	302
24862		12		**4581**	PAR46	Aircraft Landing	28.0	450	400000	Screw Terminals	3.13	10	13°	14°	302
24853		12		**4582**	PAR46	Aircraft Flood	28.0	450	20000	Screw Terminals	3.75	10	50°	55°	302
24867		12		**4587**	PAR36	Aircraft Taxiing	28.0	250	40000	Screw Terminals	2.75	25 h	40°	13°	302
24873	**24871**	12	60	**4589**	PAR36	Aircraft Flood	28.0	50	5000	Screw Terminals	2.75	400	Trapezoidal		
	23509		60	**4589-1**	PAR36	Aircraft Flood	28.0	50	5000	Slip-on Terminals	2.75	400	Trapezoidal		
24882		12		**4591**	PAR36	Aircraft Landing	28.0	100	90000	Screw Terminals	2.75	25 h	12°	6°	
24887		12		**4593**	PAR36	Aircraft Refueling	28.0	50	1500	Screw Terminals	2.75	400	80°	30°	
24891		12		**4594**	PAR36	Aircraft Navigation	28.0	100	70000	Screw Terminals	2.75	300	13°	7°	
24892		12		**4595**	PAR36	Aircraft Navigation	13.0	100	60000	Screw Terminals	2.75	300	14°	6°	
24898		12		**4596**	PAR36	Aircraft Landing	28.0	250	150000	Screw Terminals	2.75	25 h	11°	12°	302
24964		12		**4626**	PAR36	Aircraft Taxiing	28.0	150	25000	Screw Terminals	2.75	300	40°	9°	
24966		12		**4627**	PAR36	Aircraft Flood	28.0	100	3000	Screw Terminals	2.75	300	80°	30°	
33284		12		**4635**	PAR46	Aircraft Landing	16.5	450	325000	Screw Terminals	3.75	25 h	14°	15°	302
19632	**16407**	12	672	**4636-3**	PAR46	Emergency Vehicle	14.0	80	90000	Combination	3.75	200	9°	7.5°	
18517		6		**4651**	165mm	Headlamp-High beam	12.8	50	SAE	2 Contact Lugs	4.80	200			4,307
18518		6		**4652**	165mm	Headlamp-Low beam	12.8/12.8	40/60	SAE	3 Contact Lugs	4.80	200/320			4,307
39906	**39907**	12	60	**4700**	PAR36	Spot/ Flood	13.0/13.0	100/100	100000/50000	3 Screw Terminals	2.75	25/250	12°/17°	7°/18°	
46427		12		**4713**	PAR36	Aircraft Logo	28.0	150	4200	Screw Terminals	2.75	300	50°	65°	
44724		12		**4752**	PAR36	CIM Flood	28.0	60	2000	Screw Terminals	2.75	800	50°	25°	
24973		12		**4800**	PAR56	Military Headlamp	28.0/28.0	50/40	SAE	3 Contact Lugs	5.00	400/400			
24980		12		**4811**	PAR36	Military Headlamp	28.0/28.0	110/55	SAE	3 Contact Lugs	3.00	400/400			
24981	**24982**	12	60	**4825R**	PAR36	CIM Stop/Tail, Red Lens	28.0/28.0	50/18	200/40	3 Screw Terminals	2.75	200/200			
24995		12		**4880**	PAR46	CIM Headlamp	28.0	60	6000	2 Contact Lugs	4.00	800			
45110	**45111**	12	576	**4912-1**	165mm	Truck Fog	12.8	50	14000	Slip-on Terminals	4.53	300	40°	7°	167,307
	45113		16	**4913-1**	165mm	Tractor Flood	12.8	50		Slip-on Terminals	4.53	400	80°	20°	4,307
45116	**16195**	12	576	**4921-1**	165mm	Truck	13.0	100	25000	Slip-on Terminals	4.53	300	40°	7°	109,307
11639		6		**5001**	PAR46	Headlamp-High beam	12.8	50		2 Contact Lugs	4.00	200			4
16152		12		**5557**	PAR64	Aircraft Landing	28.0/28.0	1000/40	540000/100000	3 Screw Terminals	3.75	50/100	11° 25°	15° 11°	138,302
25114		12		**6006**	PAR56	Headlamp-High/Low beam	6.1/6.2	50/40	SAE	3 Contact Lugs	5.00	300/500			
18519		6		**6014**	PAR56	Headlamp-High/Low beam	12.8/12.8	60/50	SAE	3 Contact Lugs	5.00	320/150			4
38416	**38607**	12	432	**6015**	PAR56	Truck-High/Low beam	12.8/12.8	50/50	SAE	3 Contact Lugs	5.00	300/500			4
25153		12		**6045**	PAR56	Signal	26.0	170	230000	Screw Terminals	4.50	100	9°	8°	
18521	**43867**	6	448	**6052**	200mm	Headlamp-High/Low beam	12.8/12.8	65/55	SAE	3 Contact Lugs	5.44	150/320			4,307
69822	**85695**	1	24		200mm	LED Sealed Beam	11/33			3 Contact Lugs	5.44	15000			
40190	**40191**	12	60	**7400**	PAR36	Signal-rotating beacon	12.8	35	33000	Slip-on Terminals	2.75	300	12°	5°	
	42385		60	**7400-1**	PAR36	Signal-rotating beacon	12.8	35	33000	Screw Terminals	2.75	300	12°	5°	
39987		12	60	**7414Y**	PAR36	Signal-Amber Lens	12.8	18	1000	Screw Terminals	2.75	300	50°	25°	
41865	**41866**	12	60	**7613**	PAR36	Emergency Building Light	6.0	8	400	Screw Terminals	2.75	50	30°	20°	
45101	**45102**	12	60	**7613-1**	PAR36	Emergency Building Light	6.0	8	400	Slip-on Terminals	2.75	50	30°	20°	

For the most up-to-date product information, see www.gelighting.com.
All footnotes, warning and caution notices found at the end of this section (page 8-34).

Sealed Beam and Automotive Lamps (continued)

Product Code		Quantity		GE Lamp No.	Bulb	Applications	Volts	Watts	MBCP	Base	MOL (in)	Rated Life (hrs)	Spread to 10% MBCP		Footnotes, Warning and Caution Notices
Unit	Bulb	Unit	Bulk										Horizontal	Vertical	
11421	**11422**	12	60	**7672-1**	PAR36	Emergency Building Light	6.0	7	350	Slip-on Terminals	2.75	50	30°	20°	
22386		6		**H4351**	140mm	Headlamp-Low beam	12.8	55	SAE	Right Angle Lugs	4.00	500			307
10211		6		**H4351LH**	140mm	Auto export only	12.8	55		Right Angle Lugs	4.00	500			307
22387		6		**H4352**	140mm	Headlamp-High beam	12.8	65	SAE	Right Angle Lugs	4.00	150			307
	18350		48	**H4360**	140mm	Tractor	12.8	38	2000	2 Right Angle Lugs	3.00	320	Trapezoidal		307
15129		12		**H4405**	PAR36	Very Narrow Spot	12.8	30	66000	Screw Terminals	2.75	100	7°	4°	167,307
	17674		60	**H4460X**	PAR36	Tractor	12.8/12.8	40/40	11000/8500	3 Screw Terminals	2.75	320/320	22°/22°	10°/13°	4,307
15133		12		**H4515**	PAR36	Very Narrow Spot	6.4	30	67000	Screw Terminals	2.75	100	5.5°	4°	167,307
18532	**45027**	6	576	**H4651**	165mm	Headlamp-High beam	12.8	50	SAE	2 Contact Lugs	4.80	200			4,307
46375		6		**H4651SB**	165mm	Headlamp-High beam	12.8	50	SAE	2 Contact Lugs	4.80	200			4,307
18533	**49810**	6	576	**H4656**	165mm	Headlamp-Low beam	12.8/12.8	35/35	SAE	3 Contact Lugs	4.80	200/320			4,307
14753		6		**H4656HO**	165mm	Headlamp-Low beam	12.8/12.8	40/55	SAE	3 Contact Lugs	4.80	200/700			4,307
45475		6		**H4656SB**	165mm	Headlamp-Low beam	12.8/12.8	40/55	SAE	3 Contact Lugs	4.80	75/200			4,307
25098		6		**H4656 NH**	165mm	Headlamp Nighthawk™	12.8/12.8	40/55	SAE	3 Contact Lugs	4.80				307
97695		6		**H4656 NHS**	165mm	Headlamp Nighthawk™ Sport	12.8/12.8	40/55	SAE	3 Contact Lugs	4.80				307
18535	**22879**	6	576	**H4666**	165mm	Headlamp-High/Low beam	12.8/12.8	65/55	SAE	3 Contact Lugs	4.80	150/320			4,166,307
28157		6		**H4666 NH**	165mm	Headlamp Nighthawk™	12.8/12.8	65/55	SAE	3 Contact Lugs	4.80				166,307
97694		6		**H4666 NHS**	165mm	Headlamp Nighthawk™ Sport	12.8/12.8	65/55	SAE	3 Contact Lugs	4.80				166,307
18536	**48533**	6	480	**H4701**	150mm	Headlamp-High beam	12.8	65	SAE	2 Lugs	3.40	150			307
18538	**48534**	6	480	**H4703**	150mm	Headlamp-Low beam	12.8	55	SAE	2 Lugs	3.40	320			307
18522		6		**H5001**	PAR46	Headlamp-High beam	12.8	50	SAE	2 Contact Lugs	4.00	200			
18523		6		**H5006**	PAR46	Headlamp-Low beam	12.8/12.8	35/35	SAE	3 Contact Lugs	4.00	200/320			4,307
19428	**19559**	6	432	**H5024**	PAR56	Truck-High/Low beam	12.8/12.8	65/42	SAE	3 Contact Lugs	5.00	400/2000			4,307
69821	**85694**	1	24		PAR56	LED Sealed Beam	11/33			3 Contact Lugs	5	15000			
19411	**19556**	6	576	**H5051**	165mm	Truck- High beam	12.8	50	SAE	2 Contact Lugs	4.80	500			4,307
19429	**19558**	6	448	**H5054**	200mm	Truck-High/Low beam	12.8/12.8	65/42	SAE	3 Contact Lugs	5.44	400/2000			4,307
19412	**19557**	6	576	**H5062**	165mm	Truck-High/Low beam	12.8/12.8	40/55	SAE	3 Contact Lugs	4.80	400/2000			4,307
	41453		448	**H5360**	140mm	Tractor Worklight	12.8	38	2000	2 Right Angle Lugs	3.00	900	Trapezoidal		307
18525		6		**H6024**	PAR56	Headlamp-High/Low beam	12.8/12.8	65/35	SAE	3 Contact Lugs	5.00	150/320			4,307
28153		6		**H6024 NH**	PAR56	Headlamp Nighthawk™	12.8/12.8	65/35	SAE	3 Contact Lugs	5.00				307
97693		6		**H6024NHS**	PAR56	Headlamp Nighthawk™ Sport	12.8/12.8	65/35	SAE	3 Contact Lugs	5.00				307
18534	**11545**	6	448	**H6054**	200mm	Headlamp-High/Low beam	12.8/12.8	65/35	SAE	3 Contact Lugs	5.44	150/320			4,307
14752		6		**H6054HO**	200mm	Headlamp-High/Low beam	12.8/12.8	65/55	SAE	3 Contact Lugs	5.44	150/700			4,307
25097		6		**H6054 NH**	200mm	Headlamp Nighthawk™	12.8/12.8	65/55	SAE	3 Contact Lugs	5.44				307
97692		6		**H6054NHS**	200mm	Headlamp Nighthawk™ Sport	12.8/12.8	65/55	SAE	3 Contact Lugs	5.44				307
43561	**43562**	12	60	**H7550**	PAR36	Hand Lantern	6.0	8	25000	Screw Terminals	2.75	50	3°	3°	307
	23541		60	**H7550-1**	PAR36	Hand Lantern	6.0	8	25000	Slip-on Terminals	2.75	50	3°	3°	307
43564	**43565**	12	60	**H7551**	PAR36	Emergency Building Lighting	6.0	8	550	Screw Terminals	2.75	50	30°	20°	307
43567		12		**H7552**	PAR36	Emergency Building Lighting	6.0	10	650	Screw Terminals	2.75	50	30°	20°	307
43570	**43571**	12	60	**H7553**	PAR36	Emergency Building Lighting	6.0	12	850	Screw Terminals	2.75	50	30°	20°	307
	43574		60	**H7554**	PAR36	Emergency Building Lighting	6.0	20	1400	Screw Terminals	2.75	50	30°	20°	307
44642	**44643**	12	60	**H7555**	PAR36	Emergency Building Lighting	12.0	8	550	Screw Terminals	2.75	50	30°	20°	307
44924	**44925**	12	60	**H7556**	PAR36	Emergency Building Lighting	6.0	6	400	Screw Terminals	2.75	50	30°	20°	307
12720	**12721**	12	60	**H7557**	PAR36	Emergency Building Lighting	12.0	12	850	Screw Terminals	2.75	50	30°	20°	307
42841	**42842**	12	60	**H7600**	PAR36	Signal, Rotating Beacon	12.8	38	60000	Screw Terminals	2.75	300	9°	4.5°	307
43576	**43577**	12	60	**H7604**	PAR36	Very Narrow Spot	12.8	50	100000	Screw Terminals	2.75	100	7°	5°	307
14616	**48580**	6	60	**H7606**	PAR36	Tractor Flood	12.8	50	1000	Screw Terminals	2.75	400	80°	30°	4,307
	17672		60	**H7607**	PAR36	Tractor Flood	12.8	65		Screw Terminals	2.75	600	Non-symmetrical		4,307
14617	**43583**	6	24	**H7609**	PAR46	Tractor Flood	12.8	50	2200	Screw Terminals	3.75	400	80°	20°	4,307
14618	**43586**	6	60	**H7610**	PAR36	Tractor	12.8	50	5200	Screw Terminals	2.75	400	Trapezoidal		4,307
49695		12		**H7612**	PAR46	Truck Fog	12.8	38	15000	Screw Terminals	3.75	450	40°	7°	307
49731	**49732**	12	60	**H7614**	PAR36	Wide Flood	12.8	50	2000	Screw Terminals	2.75	100	70°	30°	307
42838	**42839**	12	60	**H7616**	PAR36	Very Narrow Spot	12.8	38	70000	Screw Terminals	2.75	300	7°	4°	307
14619	**43589**	6	24	**H7619**	PAR46	Tractor	12.8	50	6000	Screw Terminals	3.75	400	Trapezoidal		4,307
	45058		24	**H7621-1**	PAR46	Truck	12.8	50		Slip-on Terminals	3.75	200	50°	7°	4,109,307
43591	**43592**	12	24	**H7635**	PAR46	Very Narrow Spot	12.8	50	160000	Screw Terminals	3.75	100	6.5°	4°	307
	18022		24	**H7635X**	PAR46	Spot. Shielded Filament	12.8	50	160000	Screw Terminals	3.75	100	6.5°	4°	167,307
	13426		16	**H7921-1**	165mm	Truck Special Service	12.8	50		Slip-on Terminals	4.53	200	35°	5°	4,109,307
47460	**14892**	6	16	**H7935-1**	165mm	Narrow Spot	12.8	50	175000	Slip-on Terminals	4.53	100	6.5°	3.5°	307
15767	**15763**	12	48	**H9405**	150mm	Spotlamp	12.8	50	100000	2 Right Angle Lugs	3.00	100	7°	4°	307
15769	**15768**	12	48	**H9406**	150mm	Tractor Flood	12.8	50	1350	2 Right Angle Lugs	3.00	400	70°	30°	4,307
15771	**15770**	12	48	**H9411**	150mm	Tractor Trapezoidal Beam	12.8	50	5400	2 Right Angle Lugs	3.00	400	Trapezoidal		4,307
	15772		48	**H9414**	150mm	Tractor Flood	12.8	50		2 Right Angle Lugs	3.00	400	45°	20°	4,307

For the most up-to-date product information, see www.gelighting.com.
All footnotes, warning and caution notices found at the end of this section (page 8-34).

Sealed Beam and Automotive Lamps (continued)

Product Code		Quantity		GE Lamp No.	Bulb	Applications	Volts	Watts	MBCP	Base	MOL (in)	Rated Life (hrs)	Spread to 10% MBCP		Footnotes, Warning and Caution Notices
Unit	Bulk	Unit	Bulk										Horizontal	Vertical	
16484	**16483**	12	48	**H9415**	150mm	Truck Fog	12.8	38	12000	2 Right Angle Lugs	3.00	200	45°	5°	4,307
17988		12		**H9415A**	150mm	Truck Fog, Amber	12.8	38		2 Right Angle Lugs	3.00	200	45°	5°	4,307
16976	**16978**	12	48	**H9420**	150mm	Truck, Driving	12.8	50	47000	2 Right Angle Lugs	3.00	200	15°	5°	4,307
16482	**16204**	12	48	**H9421**	150mm	Truck, Special Service	12.8	50	4000	2 Right Angle Lugs	3.00	200	45°	8°	4,109,307
22109		12		**Q4509**	PAR36	Aircraft Landing	13.0	100	140000	Screw Terminals	2.75	100	7°	7°	301
37706		12		**Q4554**	PAR46	Aircraft Taxing	28.0	450	65000	Screw Terminals	2.63	100	50°	11°	301
40579		12		**Q4559**	PAR64	Aircraft Landing	28.0	600	600000	Screw Terminals	3.75	100	12°	8°	138,301
42552		12		**Q4559X**	PAR64	Aircraft Landing	28.0	600	765000	Screw Terminals	3.75	100	11°	7.5°	139,301
41097		12		**Q4566**	PAR46	Aircraft Logo	28.0	450	150000	Screw Terminals	3.32	1000	16°	12°	301
37372		12		**Q4597**	PAR46	Aircraft Flood	28.0	450	16000	Screw Terminals	3.32	1000	60°	35°	301
34537		12		**Q4631**	PAR36	Aircraft Landing	13.0	250	80000	Screw Terminals	2.75	500	13°	12°	301
39112		12		**Q4632**	PAR36	Aircraft Logo	13.0	250	75000	Screw Terminals	2.75	500	14°	12°	301
36271		12		**Q4681**	PAR46	Aircraft Landing	28.0	450	310000	Screw Terminals	2.63	50	15°	9°	301
41452		12		**Q5551**	PAR46	Aircraft Taxing	28.0	250	60000	Screw Terminals	3.32	100	48°	12°	301
16784		12		**Q5559**	PAR64	Aircraft Landing	28.0	600	650000	Screw Terminals	3.75	200	11°	7.5°	138,301
29130	**22227**	12	60	**Q7558**	PAR36	Landscape Lighting	12.0	18	365	Screw Terminals	2.75	5000	55°	45°	301
28113		12		**Q7559**	PAR36	Landscape Lighting	12.0	18	120	Screw Terminals	2.75	5000	70°	70°	301
28111		12		**Q7560**	PAR36	Landscape Lighting	12.0	18	1900	Screw Terminals	2.75	5000	24°	23°	301
28874		12		**Q7561**	PAR36	Landscape Lighting	12.0	18	11000	Screw Terminals	2.75	5000	9°	8°	301

Footnotes

1 Special ballast required per ECE R99.

2 B3 life, not average life.

4 Life at 14 volts.

10 Life at 5 volts.

11 Filament vertical.

12 Average overall length.

13 Filament supported.

14 This lamp may not be suitable for some uses because of its excessive wattage requirements for the bulb size.

15 This lamp may not be suitable for some uses because of its limited mechanical strength.

17 Filament shielded.

23 Life at 7 volts.

32 Designed and rated for operation in supplementary cathode preheat circuits.

33 Connections of major and minor filament to base are reversed from those for automotive lamps with Double Contact Index bases. Burn base down to horizontal.

44 Life at 6.6 volts.

78 ANSI specifies .38" LCL and .63" MOL.

79 Life shown is AC voltage only. DC life will be approx. 50% of AC.

80 Light output is approx. end foot candles, not spherical MSCP.

92 Filament segments parallel.

109 Special fixture required for highway use.

110 To be used with variable load flasher in applications where bulb outage indication is not required, or with an appropriate fixed load flasher. Flash rate may be altered if used with incorrect fixed load flasher.

113 This is a flange seal wire terminal lamp. When unbased lamps such as these are handled and wired into a device, damage can be kept to a minimum by allowing sufficient clearance so that no physical strain or excessive heat is placed on the exhaust tube, exhaust tube tip, or glass seal; by taking care in mounting lamp in equipment so that any material touching the glass is compatible in thermal expansion; and by avoiding excessive tensile strain on the lead wires.

116 Life tests are performed on DC voltage only.

121 To minimize the possible adverse effects on lamp life due to excessive wattage in relationship to bulb size: Burn Base Down to Base 45° Above Horizontal. Regardless of burning position, this excessive wattage will abnormally decrease light output during lamp life.

122 This is a wire terminal lamp. The glass-to-metal seal (and tip where applicable) are susceptible to damage by thermal shock, and soldering or welding within 1⁄8" of the glass should be avoided as glass cracks and air leaks may develop. Solderability may be adversely affected by storage for an extended period in excess of six months or by storage in a high-humidity environment. Lamps with tinned leads would be subject to these storage restrictions. Nickel-plated leads are not recommended for soldering; however, their ability to be welded is not affected by these storage restrictions.

124 .028" metal pins spaced 44mm (.157") apart. GE's two-pin lamps might not be compatible with all G-4 sockets since many sockets do not provide clearance for the exhaust tip.

128 Output is minimum 1⁄4" spot at .100" from bulb top.

132 Paint may peel, craze or discolor when subjected to excessive moisture, heat, and freezing in housings with plugged drain holes or which otherwise leak or trap moisture.

138 Life Test Conditions: Cycled 5 minutes on, 5 off.

139 Life Test Conditions: Cycled 20 minutes on, 20 off.

147 Differs from ANSI.

160 Filament will generate specified MSCP in a non-shielded bulb.

162 Life based on three hours of burning per start. MSCP at 100 hours. Designed and rated for operation in supplementary cathode preheat circuits. Use these lamps with auxiliary equipment specially designed to produce proper electrical values according to established specification. For total load, add auxiliary watts to lamp watts.

166 Contact Lugs are angled.

167 Filament shielded.

All footnotes, warning and caution notices found at the end of this section (page 8-34).

Warning and Caution Notices

301

⚠ WARNING

Risk of fire

- Keep combustible materials away from lamp
- Use in fixture rated for this product

A damaged lamp emits UV radiation which may cause eye/skin injury

- Turn power off if glass bulb is broken. Remove and dispose of lamp

Pressurized lamp—unexpected rupture may cause injury, fire, or property damage

- Use in enclosed fixture rated for this product
- Do not use lamp if outer glass is scratched or broken

⚠ CAUTION

Risk of burn

- Allow lamp/fixture to cool before handling

Lamp may shatter and cause injury if broken

- Do not use lamp if outer glass is scratched or broken
- Dispose of lamp in a closed container

302

⚠ WARNING

Risk of fire

- Keep combustible materials away from lamp
- Use in fixture rated for this product

Unexpected lamp rupture may cause injury, fire, or property damage

- Avoid contact with glass during operation
- Avoid direct water/liquid contact
- Use in enclosed fixture rated for this product

304

⚠ WARNING

Risk of fire

- Keep combustible materials away from lamp
- Use in fixture rated for this product

Lamp emits UV radiation which may cause eye/skin injury

- Avoid exposure of eyes and skin to unshielded lamp

Pressurized lamp—unexpected rupture may cause injury, fire, or property damage

- Use eye protection when handling lamp
- Do not exceed rated voltage
- Do not touch glass with bare hands
- Do not use lamp if outer glass is scratched or broken
- Dispose of lamp in a closed container
- Do not turn on lamp until fully installed
- Keep away from children
- Use protective screen when handling

⚠ CAUTION

Risk of burn

- Allow lamp/fixture to cool before handling

For Best Performance

- Limit seal temperature to 350°C
- Maintain 250°C minimum bulb wall temperature
- Remove fingerprints from bulb with grease-free solvent
- Operate at design voltage

305

⚠ CAUTION

Lamp may shatter and cause injury if broken

- Do not use excessive force when installing lamp

306

⚠ WARNING

Pressurized lamp—unexpected rupture may cause injury, fire, or property damage

- Use eye protection when handling lamp
- Do not exceed rated voltage
- Avoid direct water/liquid contact
- Use in enclosed fixture rated for this product
- Do not use lamp if outer glass is scratched or broken
- Dispose of lamp in a closed container
- Do not turn on lamp until fully installed
- Keep away from children
- Use protective screen when handling

⚠ CAUTION

Risk of burn

- Allow lamp/fixture to cool before handling

307

⚠ WARNING

Pressurized lamp—unexpected rupture may cause injury, fire, or property damage

- Do not use lamp if outer glass is scratched or broken
- Dispose of lamp in a closed container

308

⚠ WARNING

Risk of fire

- Keep combustible materials away from lamp
- Use in fixture rated for this product

Pressurized lamp—unexpected rupture may cause injury, fire, or property damage

- Use eye protection when handling lamp
- Do not exceed rated voltage
- Do not touch glass with bare hands
- Do not use lamp if outer glass is scratched or broken
- Dispose of lamp in a closed container
- Do not turn on lamp until fully installed
- Keep away from children
- Use protective screen when handling

⚠ CAUTION

Risk of burn

- Allow lamp/fixture to cool before handling

For Best Performance

- Limit seal temperature to 350°C
- Maintain 250°C minimum bulb wall temperature
- Remove fingerprints from bulb with grease-free solvent
- Operate at design voltage

Warning and Caution Notices (continued)

309

⚠ WARNING

Risk of electric shock

- Turn power off before inspection, installation or removal

⚠ CAUTION

Lamp may shatter and cause injury if broken

- Wear safety glasses and gloves when handling lamp
- Do not use excessive force when installing lamp

310

⚠ WARNING

Risk of electric shock

- Turn power off before inspection, installation or removal

Risk of fire

- Use in fixture rated for this product

A damaged lamp emits UV radiation which may cause eye/skin injury

- Turn power off if glass bulb is broken. Remove and dispose of lamp

Pressurized lamp—unexpected rupture may cause injury, fire, or property damage

- Use eye protection when handling lamp
- Do not exceed rated voltage
- Do not touch glass with bare hands
- Avoid direct water/liquid contact
- Use in enclosed fixture rated for this product
- Do not use lamp if outer glass is scratched or broken
- Use only properly rated ballast
- Operate lamp only in specified position
- Do not use beyond rated life
- Do not turn on lamp until fully installed

⚠ CAUTION

Risk of burn

- Allow lamp to cool before handling
- Do not turn on lamp until fully installed
- Turn power off before installing lamp

Lamp may rupture if used on wrong ballast

- Use only properly rated ballast

Lamp may shatter and cause injury if broken

- Wear safety glasses and gloves when handling lamp
- Do not use lamp if outer glass is scratched or broken
- Dispose of lamp in a closed container
- Remove and install by grasping only plastic portion of the lamp
- Do not use excessive force when installing lamp

INSTRUCTIONS

FDA Warning

WARNING – This lamp can cause serious skin burn and eye inflammation from short-wave ultraviolet radiation if outer envelope of the lamp is broken or punctured and the arc tube continues to operate. Do not use where people will remain for more than a few minutes unless adequate shielding or other safety precautions are used. Certain types of lamps that will automatically extinguish when the outer envelope is broken or punctured are commercially available. 21 CFR 1040.30.

Hg – LAMP CONTAINS MERCURY

Manage in Accord with Disposal Laws

See: www.lamprecycle.org or 1-800-435-4448

Lamp should be installed by an automotive service specialist.

Projection Lamps

Lamp Locator

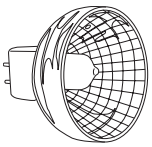

Mini Multi-Mirror®

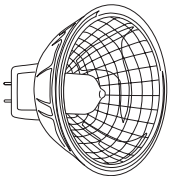

Multi-Mirror®

Quartzline® Projection Lamps

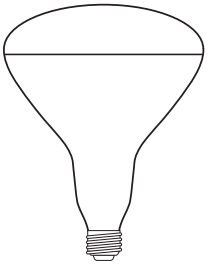

Reflector Photofloods

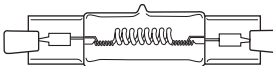

Double-Ended

Quartzline® Projection Lamps

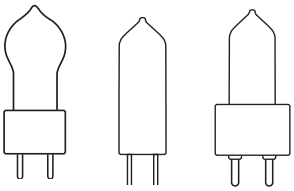

G-7 GZ9.5 | T-4 GY6.35 | T-4 GZ9.5

Quartzline® Projection Lamps – Single-Ended

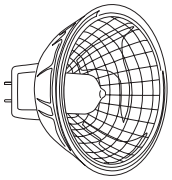

ELC
ENH
ESJ

Enlarger & Printer Lamps

Base Identification

Typical bases used on Projection lamps in this catalog are shown below along with their names and common abbreviations. Where the base is an ANSI standard type, the ANSI reference code (which is the same as the IEC base code) is also shown. ANSI reference codes conform to American National Standard C81.10. C81.30. C81.50 specifications for electric lamp bases and lampholders. Illustrations are not to scale.

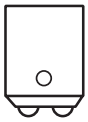

Double Contact Bayonet (D.C. Bay.) BA15d

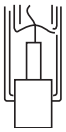

Recessed Single Contact R7

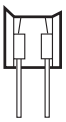

Glass 2-Pin G6.35 (.040" diam. Pins) GY6.35 (.050" diam. Pins) GZ6.35 (Reflector Quartzline® lamps)

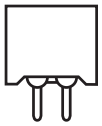

Miniature 2-Pin G5.3

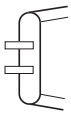

GY5.3 2-Pin (Flat Pins)

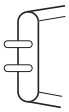

GX5.3 2-Pin (Round Pins)

2-Pin Prefocus GY & GZ9.5

Light Center Length (LCL)

Light center length is the distance from the center of the light source to the point indicated below for the lamp base used. It is a measurement to which the lamp is designed and is subject to the manufacturer's tolerances.

Base Type	LCL Reference
D.C. Bayonet	Top of base pins
2-Pin Prefocus	Bottom of base ceramic
Miniature 2-Pin	Bottom of base pins
Glass 2-Pin	Bottom of base pins

Filament Identification

The configuration of the filament in all tungsten filament lamps (including Quartzline®) is identified by a prefix letter and a suffix number. The prefix letter indicates whether the filament wire is a single coil (C) or a coiled coil (CC). The suffix number indicates the form or arrangement of the filament coil or coils on its support structure. Illustrations are not to scale.

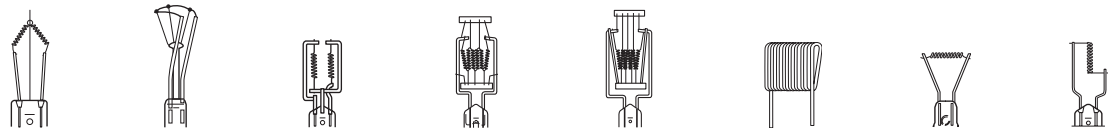

C-2V CC2-V | C-9 | 2C-8 2CC-8 | C-13 | C-13D | C-6 Oval | C-6 CC-6 | C-8 CC-8

Introduction

General Electric Projection Lamps are designed for a wide variety of applications...and now extending well beyond the original picture-taking and audio-visual projection uses into such fields as: fiber optical systems, graphic arts, video camera lights, airport runway markers, micrographics, photo printers and enlargers, medical/scientific instruments and many others.

The information contained in this section is designed to provide end-users, equipment manufacturers and lamp distributors and dealers with:

- Essential technical data on GE Projection Lamps (Quartzline®, Incandescent and Photoflood)
- Suggested substitutes for improved performance or discontinued lamps

The majority of Projection Lamps described herein are characterized by:

- Precisely manufactured, tailored filaments maximizing source brightness, optimum performance in precision optical devices
- High light-generating efficacy (lumens per watt)...to help minimize power requirements and heat generation
- Prefocus type bases, or rim-reference mounting for Multi-Mirror® lamps...to position the filament accurately in relation to the associated optics
- Design life Rated Life (per ANSI Standard)
- Lamps with internal or external reflectors (as in Multi-Mirror® and some 4-pin projection lamps) permitting high-efficiency illumination system designs with a minimum of additional optical control elements

Manufacturers and designers of equipment requiring lamps should select lamps of established design whenever possible for maximum economy, as well as for ease of replacement by their customers through regular trade channels. General Electric offers application engineering assistance to all customers for applying lamps in product design. Contact your local GE Lamp Representative for additional information or assistance.

Warning and Caution Notices Information

As with any product, certain precautions should be observed in the handling and use of GE Projection Lamps to provide optimum performance and safety. These are given in the Caution Notices that are printed on page 9-7.

Important Notice

This catalog contains accumulated data to March 2008. Additional information is constantly being uncovered through research and testing, which may modify the data given herein. This is particularly true of newer lamps. For the latest lamp design data and information, contact your General Electric Lamp Representative.

The data and suggested applications contained in this catalog, as well as any additional information our representative may be able to furnish, are for general information only and are not intended and should not be taken as representations or warranties as to the suitability of a lamp for any particular application or use in any particular equipment, nor are our representatives authorized to make any such representations or give any such warranties.

Applications and conditions of use are many and varied, and beyond our control. We cannot possibly have the same degree of knowledge that the purchaser has with respect to the design of his equipment and the conditions of its use. Therefore, it is up to the purchaser to make its own determination as to the suitability of a lamp for his intended application or use and to assume the responsibility for that determination.

General Electric desires to supply the best possible products at all times. For this reason, General Electric reserves the right to make changes in its products when it believes such charges will improve its products.

General Information

General Electric Projection Lamps are briefly described in the ANSI lamp index (page 9-7). More extensive descriptive and performance data are found in the lamp tables, which are organized as "families" of lamps with one or more features in common – such as Multi-Mirror® Quartzline®, Single-Ended Quartzline®, 4-Pin Based Incandescent, Photoflood, etc. Within each table, lamps are listed alphabetically by GE Lamp Code.

GE Multi-Mirror® Quartzline® Projection Lamps

Invented By GE For Optimized Projection System Performance, the Multi-Mirror® and its new companion, the Mini Multi-Mirror®, are reflector halogen Quartzline® lamps with innovative GE features that result in better system efficiency, screen uniformity, lamp-to-lamp consistency and relamping convenience.

Feature	Benefit	Applications
• Dichroic reflector	• Cool light beam • Efficient light reflection	• Slide Projection • Front/Rear Screen Projection
• Precise rim reference	• Quick lamp installation	• Microfilm
• Accurate snap-in alignment		• Overhead Projection
• Faceted reflector	• Efficient beam for brighter image • Uniform screen image • Precision beam control	• 16mm Movie • 8mm Movie • Film Strip
• Halogen Quartzline® lamp	• Whiter and brighter light • No bulb blackening/blistering • Constant light output through life • Stable color temperature	• Enlargers/Printers • Fiber Optics • Medical/Scientific Instruments • Video Camera Lights • Airport Runways • Display

Each GE Multi-Mirror® lamp type is optically tailored to its application. First, the appropriate type of multi-faceted reflector is determined. Then a filament tube developed, using advanced Quartzline® technology. Finally, the two are combined, using sophisticated, computerized precision-assembly techniques. The result – consistently high performance...lamp after lamp after lamp.

Headings in this catalog section

The following terms and descriptions can help you when checking Projection lamp specifications and when ordering products. Within each product line, lamps are divided into families. Within families, lamps are listed by ANSI code.

ANSI Codes:
These are 3-letter codes assigned by the American National Standards Institute. They provide a system of assuring mechanical and electrical interchangeability among similarly coded lamps from various manufacturers. General Electric uses the assigned ANSI Codes as Lamp Ordering Codes for most Projection Lamps.

Multiple-ANSI-Coded Projection Lamps:
Some GE Projection Lamps have an ordering code comprising two or more 3-letter ANSI codes – such as EM/EKS and DYS/DYV/BHC. The first code is the ANSI code, the secondary codes identify the multiple-coded lamp can directly replace. Only the first code appears on the lamp itself. Multiple-coded lamps are so-designated by General Electric for the convenience of the customer.

Maximum Overall Length (MOL):
This dimension includes the lamp bulb and all rigid parts of the base. Since the listed lengths include maximum tolerances, actual lamps are generally slightly shorter.

Bulb Shape:
Projection Lamp bulb designations use a combination of letters and numerals to indicate bulb shape and maximum diameter in eighths of an inch. For example: a "T12" bulb is Tubular-shaped and twelve-eighths of an inch, or 1-1/2" in diameter. Illustrations of typical Projector Lamps and their respective bulb designations are shown in the tables of lamp families, pages 9-2.

Light Center Length (LCL):
This dimension defines the location of the filament in relation to the base. It is measured from the geometric center of the filament to a specified point on, or plane through, the base. Light Center Length is subject to manufacturing tolerances. Reference points/planes from which LCL is measured are tabulated on page 9-2 for the various styles of lamp bases.

Base:
Projection Lamp base illustrations appear on page 9-2, along with their common trade names and abbreviations, plus their letter-number ANSI/IEC designations where applicable.

Rated Life:
Life ratings of Projection Lamps are based on closely controlled laboratory tests of lamps, at their rated voltage, over a long period of production time. Rated Life is not necessarily the same as service life; mechanical shock and vibration, voltage fluctuation, temperature and other environmental factors may result in shorter service life. As with any median value, some individual lamps will operate longer and some will operate shorter, than their Rated Life (supply voltage variation can significantly affect lamp life).

Source Size:
This is defined as the dimensions of the rectangular area, centered on the lamp axis, within which all luminous parts of the filament lie, when viewed perpendicular to the axis of the filament coil or to the plane of C-13 and C-13D filaments.

Watts (or Amps):
This column shows the rated power consumption (watts) of the lamp at its design voltage. A few lamps, in Table 5, are rated in terms of current (amperes) drawn initially at their rated voltage. The watts shown for the lamps in Table 5 are the approximate initial values for operation at rated amperes.

Order Code:
It is important to use this five-digit code when ordering to ensure that you receive the exact product you require.

Initial Lumens:
The value shown is based on spherical photometry, at rated voltage, of lamps that have been seasoned for approximately 15% (or minimum of 2 hours) or more of their rated average life.

Typical Working Distance:
For Multi-Mirror® and other reflector Quartzline® lamps, the Working Distance shown is the distance from the front surface of the reflector rim to the film plane, in the optical system for which the lamp was first designed. In most cases, it provides a uniform plane of light for the intended aperture.

Description:
This is a 3-letter or letter-number code uniquely identifying the lamp for ordering purposes. In some instances, lamps with 3-letter (ANSI) codes are offered in more than one design voltage, in which case the voltage required should also be specified when ordering.

Color Temperature:
The radiation within the visible spectrum from tungsten filament lamps is similar in spectral distribution to that from a "blackbody" at specific color temperatures. The Color Temperatures shown are approximate initial values in degrees Kelvin (K) for lamps operated at rated voltage.

Volts:
The voltage shown is the design voltage of the lamp, on which the life and wattage ratings are based. Lamps are available only in the design voltage(s) shown. When ordering lamps listed for more than one voltage, be sure to specify the voltage required (supply voltage variation can significantly affect lamp life).

CBCP (Center Beam Candlepower):
For reflector type lamps. Center Beam Candlepower is the intensity (candelas) at the center or maximum intensity of the beam.

Operating Position:
For good performance, lamps must be used within specified limitations on operating position. The following abbreviations are used in the lamp tables to indicate these limits:
BD = Base Down. Operate only vertical, base down.
HD = Base Down to Horizontal. Do not operate base above horizontal.
H22 = Operate base down to 22° base up.
U = Operate in any position.

Case Quantity:
Number of product units packed in a case.

Filament Design:
Typical filament configurations for Projection Lamps are shown on page 9-3, along with an explanation of the filament designation system.

Warning and Caution/Footnote:
See page 9-7 for explanation.

Additional Information:
Typical application and/or other important information.

Bulb Shape	Base	Watts	Order Code	Description	Volts	Case Qty	Filament Design	MOL (in)	LCL (in)	Rated Life (hrs)	Initial Lumens	Color Temp K	CBCP	Burn Position	Additional Information	Warning and Caution/ Footnote	Typical Working Distance	Source Size (W x H)
Quartzline® Multi-Mirror® Reflectors																		
MR-11 Faceted Dichroic Reflector. 1-3/8" Diameter (35mm). Table 1.																		
MR11	GZ4 2-Pin	28	30894	FLS	12	10	CC-6	1.38		1000		3000		HD	Microfilm	A		

FLS

ANSI Code.

Projection Lamps

Bulb Shape	Base	Watts	Order Code	Description	Volts	Case Qty	Filament Design	MOL (in)	LCL (in)	Rated Life (hrs)	Lumens Initial	Color Temp K	CBCP	Burn Position	Additional Information	Warning and Caution/ Footnote	Typical Working Distance	Source Size (W x H)
Quartzline® Multi-Mirror® Reflectors																		
MR-16 Faceted Dichroic Reflector, 2" Diameter (51mm)																		
MR16	GX5.3 2-Pin	150	43537	DDL	20	20	C-6	1.75		500		3150		HD	Microfilm	A	7.75	
		85	43950	DED	13.8	20	C-6	1.75		1000		3150		HD	Microfilm	A	6.50	
	GX5.3 2-Pin	150	35200	EKE	21	20	CC-6	1.75		250		3250		HD	8mm Projection, Fiber Optics	A	1.75	
		250	37462	ELC	24	20	CC-6	1.75		50		3400		HD	Fiber Optics, Color Printer	A	1.25	
		250	15377	ELC/500	24	20	CC-6	1.75		500		3350		HD	Fiber Optics, Disco	A	1.25	
	GX5.3 2-Pin	50	25475	ENL	12	20	C-6	1.75		4000		3050		HD	Fiber Optics, Display Lighting	A	1.50	
	GY5.3 2-Pin	360	41705	ENX	82	20	CC-8	1.75		75		3300		HD	Overhead Projection	A	11.75	
			19475	ENX-5	86	20	CC-8	1.75		75		3300		HD	Overhead Projection	A		
	GX5.3 2-Pin	42	41729	EPT	10.8	20	C-6	1.75			10000		2900	HD	Fiber Optics	A	1.50	
	GX5.3 2-Pin	50	14887	FML	13.8	20	CC-6	1.75		1000		3150		HD	Microfilm	A	8.44	
	GY5.3 2-Pin	410	21613	FXL	82	20	CC-8	1.75		38		3300		HD	Overhead Projection	A	11.75	
Quartzline® Single-Ended																		
Applications: Projection, Microfilm, Studio, Etc.																		
G7	GZ9.5 2-Pin Pf	650	33250	DYR	240	24	2CC-8	2.50	1.44	50	16500	3200		U		A		.45 x .45
		600	32955	DYS/DYV/ BHC	120	24	CC-6	2.50	1.44	75	17000	3200		HD		A		.50 x .25
T3.5	G5.3 2-Pin	30	37346	DZA	10.8	24	C-6	2.00	1.06	400	530	3100		HD		A		.15 x .05
T4	G6.35 2-Pin	250	14874	EHJ	24	100	C-6 Oval	2.25	1.31	50	8000	3400		HD		A		.30 x .15
T3.5	G5.3 2-Pin	360	12696	EYB	82	24	CC-8	2.25	1.25	75	10000	3300		HD		A		
T3	GY6.35 2-Pin	100	14876	FCR	12	100	C-6 Oval	1.75	1.18	50	2800	3300		HD		A		
T4	G6.35 2-Pin	150	13598	FCS	24	100	C-6 Oval	2.00	1.18	50	4500	3300		HD		A		
T3	GZ9.5 2-Pin Pf	100	35321	FDT	12	24	C-6 Oval	2.12	1.06	50	2900	3300		HD		A		
T4	G6.35 2-Pin	150	36878	FDV	24	24	C-6 Oval	2.00	1.19	100	4300	3050		U		A		
Quartzline® Single-Ended – Amp Rated																		
T4	GZ9.5 2-Pin	120	10099	EVV	6.6A	24	C-6 Oval	2.50	1.54	500	3150	3200		BD	Airport	A		
		150	11427	EWR	6.6A	24	C-6 Oval	2.50	1.54	500	4100	3200		BD	Airport	A		
T3.5	GZ9.5 2-Pin	30	11478	EXL	6.6A	24	C-8	1.75	1.00	1000	375	2900		HD	Airport	A		
		45	11482	EXM	6.6A	24	C-8	1.75	1.00	1000	750	2950		HD	Airport	A		
T4	GZ9.5 2-Pin	200	15243	EZL	6.6A	24	C-6 Oval	2.50	1.54	500	5000	3100		BD	Airport	A		
Quartzline® Double-Ended Projection																		
T5	R7s	1000	38311	ETT	120	24	CC-8	3.75		70		3350		U	Spec. (PH1000H)	A		
Incandescent Projection																		
Double Contact Bayonet Base, ANSI Base Designation: BA15D																		
T8	D. C. Bay.	50	29171	CAX	118	24	CC-2V	3.13	1.38	50	775	2875		BD	Optical Projection			
		50	29169	CAX	130	24	CC-2V	3.13	1.38	50	775	2875		BD	Optical Projection			
Photoflood																		
Reflector																		
R40	Medium	500	30151	DXB	120	24	CC-2V	6.63		6		3300	45000		Spot Beam, 15 Degrees	A, Q		

For the most up-to-date product information, see www.gelighting.com. To convert inches to millimeters, multiply by 25.4.
All footnotes, warning and caution notices found at the end of this section (page 9-7).

Footnotes

Q Approximate beam spread to 1/2 center-beam intensity.

Warning and Caution Notices

A

⚠ Warning

Risk of electrical shock

- Turn power off before inspection, installation or removal

Risk of fire

- Keep combustible material away from lamp
- Use in enclosed fixtures rated for this product

Pressurized lamp – unexpected rupture may cause injury, fire, or property damage

- Do not exceed 110% of rated voltage
- Avoid direct water/liquid contact
- Use in enclosed fixtures rated for this product
- Do not use lamp if outer glass is scratched or broken

Caution

⚠ Risk of burn

- Allow lamp/fixture to cool before handling
- Turn off power before installing lamp

Lamp may shatter and cause injury if broken

- Do not use lamp if outer glass is scratched or broken
- Dispose of lamp in enclosed container

ANSI Coded GE Projection Lamps Index

Order Code	Description	Watts	Volts	Bulb Shape	Base	Page No.
BHC USE DYS/DYV/BHC						
29171	CAX	50	118	T8	D. C. Bay.	9-6
29169	CAX	50	130	T8	D. C. Bay.	9-6
DAB USE CZX/DAB DAK USE DAT/DAK						
43537	DDL	150	20	MR16	GX5.3 2-Pin	9-6
43950	DED	85	13.8	MR16	GX5.3 2-Pin	9-6
DLG USE DLS/DLG/DHX						
30151	DXB	500	120	R40	Medium	9-6
33250	DYR	650	240	G7	GZ9.5 2-Pin Pf	9-6
32955	DYS/DYV/BHC	600	120	G7	GZ9.5 2-Pin Pf	9-6
DYV USE DYS/DYV/BHC						
37346	DZA	30	10.8	T3.5	G5.3 2-Pin	9-6
14874	EHJ	250	24	T4	G6.35 2-Pin	9-6
EJN USE ELD/EJN						
35200	EKE	150	21	MR16	GX5.3 2-Pin	9-6
EKS USE EMM/EKS						
37462	ELC	250	24	MR16	GX5.3 2-Pin	9-6
15377	ELC/500	250	24	MR16	GX5.3 2-Pin	9-6
ENA USE EKP/ENA ENC USE ENW/ENC						
25475	ENL	50	12	MR16	GX5.3 2-Pin	9-6
41705	ENX	360	82	MR16	GY5.3 2-Pin	9-6
19475	ENX-5	360	86	MR16	GY5.3 2-Pin	9-6
41729	EPT	42	10.8	MR16	GX5.3 2-Pin	9-6
38311	ETT	1000	120	T5	R7s	9-6
10099	EVV	120	6.6A	T4	GZ9.5 2-Pin	9-6
11427	EWR	150	6.6A	T4	GZ9.5 2-Pin	9-6
11478	EXL	30	6.6A	T3.5	GZ9.5 2-Pin	9-6
11482	EXM	45	6.6A	T3.5	GZ9.5 2-Pin	9-6
12696	EYB	360	82	T3.5	G5.3 2-Pin	9-6
EZJ USE EZF/EZJ						
15243	EZL	200	6.6A	T4	GZ9.5 2-Pin	9-6
FBD USE FBG/FBD						
14876	FCR	100	12	T3	GY6.35 2-Pin	9-6
13598	FCS	150	24	T4	G6.35 2-Pin	9-6
FDS USE DZE/FDS						
35321	FDT	100	12	T3	GZ9.5 2-Pin Pf	9-6
36878	FDV	150	24	T4	G6.35 2-Pin	9-6
FKT USE EYH/FKT						
14887	FML	50	13.8	MR16	GX5.3 2-Pin	9-6
21613	FXL	410	82	MR16	GY5.3 2-Pin	9-6

Notes

Table of Contents
T8 Instant Start Ballasts

See page E-1 for warranty information.

Understanding the New Fluorescent Ballast Rule, EPCA 10 CFR 430

In 2008 Congress began the Rulemaking for Fluorescent Ballasts, and as it is a 3-year process, the New Rule was completed in November 2011, and will come into effect in November of 2014. The current rule covered only the Federally Regulated T12 lamp ballast for 4-foot and 8-foot T12 lamps and was based on Ballast Efficacy Factor (BEF) as the performance metric. The BEF measurement is a complicated photometric process with many opportunities for error in the measurements. In order to improve the accuracy of the rating process, a new metric was developed, Ballast Luminous Efficiency (BLE), a purely electrical measurement without the error prone photometric measurements.

The New Rule also expands the number and types of ballasts that will be under Federal Regulation. Currently, until November 2014, only the T12 types mentioned are under Regulation. In November 2014, many more types of ballasts will be under Regulation, including most T8 and T5 ballasts. Sign and Residential ballasts are also included in the New Rule. Ballast manufacturers are required to report the performance of these ballast types to the Department of Energy and certify that they meet the BLE requirements for the specific ballast types.

The test plan for the BLE metric measurement is based on the ballast operating a known lamp load. The total discharge or output power is measured and applied to an equation for the specific ballast type. The equation provides the minimum performance limit. The ratio of the output power divided by the input power defines the ballast efficiency, and the ballast efficiency must be greater than the calculated limit for the ballast to be compliant.

One other change that is coming is a new way to determine Ballast Factor, or the light output level of the ballast. The present way is a photometric ratio measurement requiring a controlled environment and reference ballasts and lamps. In the new method, a purely electrical measurement, the output the average output power for one lamp is compared to an Industry Standard (ANSI) rated lamp power. The ballast factor is simply the ratio of the measured power divided by the ANSI rated power.

The familiar BEF value can be calculated as it always has been, dividing the Ballast Factor by the input power. However, an existing BEF cannot be "back calculated" to arrive at an input wattage or ballast factor.

The increased performance requirements of the New Rule will cause some ballasts to be taken off the market. Many GE ballasts already meet the new 2014 requirements and will continue to be available for sale as the Rule becomes effective.

See page E-1 for warranty information.

Understanding T8 Fluorescent Ballasts

A comprehensive range of solutions...from GE, the name you trust.

GE introduced the first fluorescent ballast more than 60 years ago. Today we are providing high-frequency electronic ballasts for almost every fluorescent application.

With our UltraMax® and UltraStart® ballasts, we are bringing you the future in ballast performance.

GE revolutionizes lighting again with breakthrough technology. Our patented UltraMax® instant-start and UltraStart® programmed start electronic ballasts transform the power of light into efficiency and savings from store shelves to the installation site. The foundation of the "Ultra" family of ballasts starts with its high efficiency ratings. High efficiency ballasts are a minimum of 90% efficiency with some ballasts nearly 95% efficient which means the ballast only consumes 5-10% of the total system power. These high efficiency ballasts exceed minimum high efficiency standards as established by almost all energy advocate groups, utility rebate programs and the NEMA Premium® ballast program. The ballasts are marked with the Ultra brand as well as the NEMA Premium® ballast mark. These ballasts have multi-voltage control (MVC), which automatically adjusts to handle voltage from 120V through 277V. That cuts the ballast models you need to stock from 40 down to 13, which can dramatically reduce inventory carrying costs. UltraMax® ballasts have ArcGuard Protection, too, with a UL Type CC Anti-Arc Rating. Plus, they're ultra-lamp-friendly, with a low lamp current crest factor of 1.4 for optimal lamp performance. Both UltraMax® and UltraStart® have anti-striation control for better light quality with no lamp striations (spiraling). And the small, low-profile design of these ballasts makes retrofits effortless at the job site. Also unique to our programmed start UltraStart® ballasts is parallel lamp operation which means that if one lamp fails the others remain on, and quick starting times of less than 700 milliseconds which is necessary in avoiding delays with automatic sensors.

GE Fluorescent Ballast Types

Electronic Instant Start

The most common fluorescent ballast is the instant start and is used typically in long 3 to 10-hour lamp cycle applications. These ballasts are energy efficient and can deliver 20% to 40% energy savings when installed with energy-efficient lamps in building retrofits. These ballasts deliver >550 open circuit volts when starting lamps and operate lamps at high frequencies which offers flicker-free operation and better lamp efficiencies.The ballasts are significantly quieter than conventional magnetic ballasts and are backed by GE's ultra system 5-year ballast limited warranty and extended lamp warranties.

UltraMax® Professional Series

A family of high-efficiency GE T8 instant-start electronic linear fluorescent ballasts designed to optimize GE's T8 Ultra lamps for optimal system energy savings. UltraMax® ballasts have a low lamp current crest factor and virtually "read" and adapt to incoming voltage from 108V to 305V. Other features include UL Type CC Anti-Arc Rating and anti-striation control to eliminate lamp striations and spiraling. These ballasts are offered in ballast factors: low wattage (.77), normal light (.87), normal-high (N+) (1.0) and high (>1.15).

UltraMax® General Series

Offered in dedicated or multi-volt (120-277V), these high-performance T8 instant-start ballasts also meet minimum efficiency requirements as established with the NEMA Premium® ballast program. These ballasts are offered in ballast factors: low wattage (.77), normal light (.87), and high (>1.15).

Programmed Start

Programmed Start electronic ballasts have a lamp starting method that preheats lamp filaments before applying an open circuit voltage (OCV) to start the lamp. Use Programmed Start ballasts to ensure long lamp life when turning lamps on and off more than five times in a day or in conjunction with any automatic light control or sensor. This type of starting circuit keeps lamp-end blackening to a minimum and improves lamp life performance, especially in applications where the lamps are frequently switched on and off.

UltraStart®

UltraStart® is a family of high-efficiency GE Programmed Start electronic linear fluorescent ballasts that also exceed NEMA Premium® ballast efficiency requirements but are designed to optimize GE's T8 Ultra lamps in frequently switched applications. Instant start ballasts provide 7,000-13,000 starts before 50% lamp failure. UltraStart® provides greater than 100,000 starts before 50% lamp failure. UltraStart® ballasts provide the same energy savings and convenience of instant start ballasts but with the longer lamp life offered a programmed start ballast. These ballasts are offered in ballast factors: programmed start x-low wattage (XL) (.60), low wattage (.71), normal light (.87), and high (>1.15).

Ballast Date Codes

Date Codes

GE electronic ballast manufacturing date codes are located on the upper right-hand corner of the label. The code lists the month, year and day of manufacture. A typical code is C16-073, where the month is listed as A (January), B (February), C (March) as in this code followed by the year 16 (2016) and the date of manufacture 073 (the 73rd day of 2016).

Ballast Life

GE electronic ballasts are designed and manufactured to an average life expectancy of 60,000 hours of operation at maximum rated case temperatures. As a rule of thumb, ballast life is doubled for every 10C reduction in ballast case temperature. However there are other variables such as transients, voltage sags and swells, ambient temperature, etc., which affect ballast life as well.

See page E-1 for warranty information.

Instant Start vs. Rapid Start Sockets

When using programmed start or dimming ballasts in fixtures, sockets must be 2-pin rapid start type. Fixtures with T8 instant start ballasts must use jumpered rapid start sockets or shunted lamp holders (internal to the lamp holder) that bridge the lamp bi-pins together into one contact on each side of the lamp. If retrofitting from a instant start ballast fixture with shunted sockets to a dimming or programmed start ballast, rapid start type sockets must be used to properly start lamps and maintain rated lamp life.

GE Ballast Electronic nomenclature

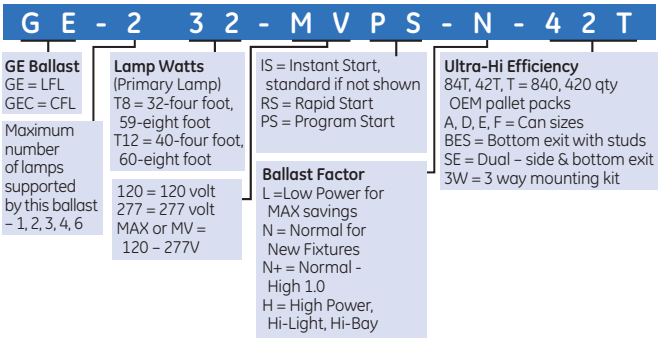

Understanding Fluorescent Systems

GE introduced the first practical fluorescent lamp in 1938. All fluorescent lamps operate on electrical control gear called a ballast. Today, electronic ballasts have continued to replace the magnetic designs that were common previously. The 4-foot T8 lamp on an electronic ballast is the most common system. The generic version of this lamp is called the F32T8 and in recent years, energy saving reduced wattage lamps like the F28T8 and the F32T8/25W have become popular. These lamps typically operate on Instant Start (IS) or Programmed Rapid Start (PRS) ballasts and both types of ballasts are available in a variety of ballast factors ranging from 0.60 to 1.18.

Ballast Factor

The F32T8 lamp has a "nominal" wattage of 32 watts. Nominal means "in name only" because there are no ballasts commercially available that will operate this lamp at 32 watts! The "N" or "Normal" ballast factor ballast operates this at around 26 watts while the "L" operates the lamp around 23 watts; the "N+" operates it around 29 watts and the "H" around 34 watts. Electronic ballasts operate lamps at high frequencies of greater than 20 kHz, which results in more efficient lamp operation than at 60 kHz, like the magnetic ballasts they replace. This results in a lamp that is more efficient than the 32 nominal watts.

Unlike HID lamps and Incandescent/Halogen lamps which are designed for optimum performance at a specific wattage, linear fluorescent lamps can be operated over a reasonably wide range without sacrificing performance, such as life or efficacy. Therefore, there is no "optimum" wattage for a lamp, only a range. The F32T8 lamp can produce between 60% to 118% of its catalog lumens when operated on a ballast with a ballast factor of 0.60 to 1.18. The higher the operating wattage, the higher the lumen output within this range.

Consumers have a choice among ballasts, depending on how much light they desire from the lamp and how much energy they are trying to save. The ballast specification from the ballast manufacturer provides the "input wattage" of the ballast. A two lamp electronic ballast with input watts of 56 watts (BF of 0.88) is using 56 watts of power to operate 2 lamps--typically 26 watts in each lamp and 4 watts in the ballast. In contrast, a ballast with BF of 1.18 will consume 76 watts but also produce more light.

An engineer or designer will choose a high BF when trying to "squeeze" as much light as possible from the lamp, e.g. in high-bay applications or when they are trying to reduce the number of lamps used in the area. A lower BF reduces the light output and wattage of each lamp, so that more lamps (and more fixtures) are needed to achieve a certain footcandle level in the same area. Of course more fixtures also means closer spacing and more uniform lighting.

It must be noted that ballast factor (and any measure involving BF) requires a measurement of lamp lumens and is, therefore, not a pure electrical measurement. The uncertainty and variation associated with individual lamp performance is present in these measures.

Actual Light Output of Lamp = (Catalog Lumens) x (Ballast Factor)

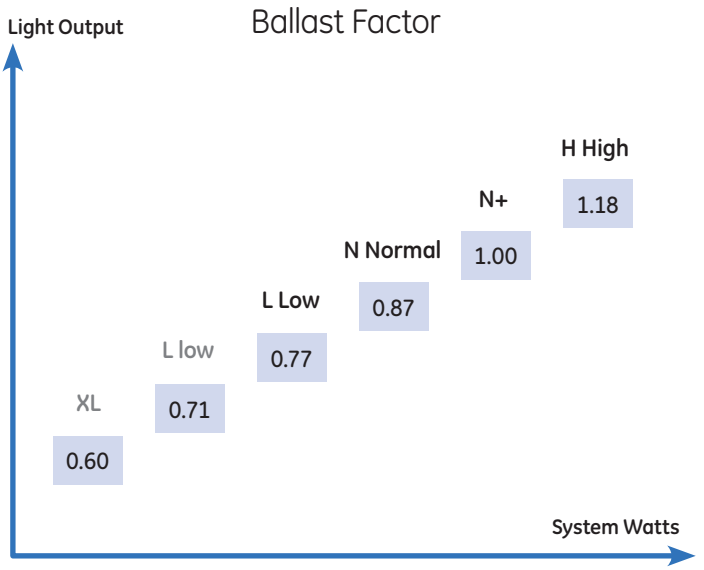

See page E-1 for warranty information.

Instant Start and Programmed Rapid Start Ballasts

There are two major families of ballasts. While the current limiting function is the same, these ballasts differ in how they start the lamp.

Instant Start (IS) Ballasts apply a relatively high voltage (e.g. 550 volts) to get the discharge going and the lamp starts instantaneously. (GE's UltraMax® family)

Programmed Rapid Start (PRS) Ballasts provide a gentler start through cathode heating prior to application of starting voltage, and are particularly useful when lamps are turned on and off frequently (motion sensors, occupancy sensors). However, they are being used even in one-start-a-day applications because they extend lamp life significantly. (GE's UltraStart® family)

Ballast Efficacy Factor (BEF)

BEF is BF (Ballast factor) divided by ballast input watts. For a given BF and a certain number of lamps operated on the ballast, the more efficient ballast will have lower watts and, therefore, a higher BEF.

$$\text{Ballast Efficacy (BEF) Factor} = \frac{\text{Ballast Factor}}{\text{Ballast Input Watts}} \times 100$$

Some industry groups write standards based on BEF in order to identify more efficient ballasts. However, this measure is somewhat obscure and an alternate measure that is simpler to understand is:

System Efficacy (Mean System LPW or MLPW)

This is the mean source lumens provided by the particular system divided by the watts the system is using.

$$\text{Mean Source Lumens} = \left(\text{Lamp Mean Lumen Rating}\right) \times \left(\text{Ballast Factor}\right) \times \left(\text{Number of Lamps}\right)$$

and

$$\text{System Efficacy (MLPW)} = \frac{\text{Mean Source Lumens}}{\text{Ballast Input Watts}}$$

The Consortium on Energy Efficiency (CEE) uses both BEF and MLPW in its documents on high performance T8 specifications and reduced wattage T8 specifications. The rebate programs of many utilities around the country currently use these two measures to determine which systems will qualify for rebates.

Ballast Electrical Efficiency (BE)

A simple electrical measure of how efficiently a ballast performs is:

$$\text{Ballast Efficiency} = \frac{\text{Watts Delivered to Lamps}}{\text{Ballast Input Watts}}$$

NEMA (National Electric Manufacturer's Association) uses Ballast Efficiency (BE) as an alternative method to designate "NEMA PREMIUM" ballasts as those having 90% or greater electrical efficiency. BE is gaining increasing acceptance as an objective and reproducible measure because it excludes the variability present in individual lamp performance and the difficulties associated with accurate determination of lumens.

Fluorescent Ballast Application Notes

Ballast Operating Lifetime

Heat is the enemy of modern electronic ballasts. As ballast case temperature increases, life expectancy decreases. GE ballast designs feature patented high efficiency circuits that have less losses and lower internal heat generation than competitive ballasts. Ballast lifetime is developed from thermal testing conducted per UL specified test conditions at a 40°C still air ambient condition. Some GE ballasts are even UL approved for use at 55°C ambient without exceeding the maximum permissible case temperature. Since GE ballasts typically operate well below the maximum temperature rating, the ballast lifetime will usually extend longer that the design life of 60,000 hours. Reducing the case temperature by 10°C will double the life expectancy, but this depends on the operating environment which includes ambient temperature, fixture thermal performance and input voltage conditions.

EMI and RFI

All electronic ballasts operate at frequencies that generate Electromagnetic Interference or Radio Frequency Interference. GE Ballasts are tested by FCC certified labs to ensure their emissions are well within the established limits for Class A Commercial and Industrial applications. Some GE ballasts are designed for Residential applications and meet a more stringent Class B Consumer FCC rating. The Consumer rating will minimize chances of the ballast interfering with radio and television reception. If interference results, ensure the ballast case is properly grounded to the metal fixture, and the fixture is grounded by a green ground wire that connects directly to the service panel. As the electromagnetic spectrum is increasing occupied, it is recommended to test a sample lamp and ballast system in the intended environment to ensure there are no undesired interactions with other equipment or systems operating in the same environment.

Energy Saving Lamps

Energy saving lamps lower the lamp operating wattage by use of special gas mixtures. These lamp are sometimes harder to strike or break down than full wattage lamps and due to the gas mixture, may be more susceptible to striations during operation. GE Ballasts feature proprietary anti striation circuitry that minimize or completely eliminate striation effect of energy saving lamps. Ballast remote mounting distance is specified for standard full wattage lamps only.

Fixture Wiring Techniques

Electronic ballasts are now much more popular than the old magnetic ballasts, offering superior energy efficiency, greater lamp efficacy, and cooler operation. The first electronic ballasts operated only slightly above the audible frequency range around 22 kHz. As today's ballasts operate at high frequency, typically 40 kHz and higher, some attention is needed to ensure the fixture wiring does not create any starting or operational issues due to wiring capacitance.

See page E-1 for warranty information.

As ballasts decrease in size, the operation frequency increases. The increased frequency of operation makes capacitive effects more pronounced. Capacitive effects come from a high frequency lead wire being in proximity to another lead wire or the grounded metal of the fixture. Worse capacitive effects result when the lead wires are closer and the frequency is higher.

When installing ballasts into fixtures, the wiring needs to be routed point to point and if possible, the excess wire trimmed out. Occasionally, some installers tend to be too neat, twisting the wires together or bundling the wires together with wire ties. While this does make for a neat fixture, it may create capacitive effect issues for the lamp and ballast system.

Wire bundling can create unintended current flows from lead to lead and also from lead to ground in the fixture. These current flows are parasitic, and will reduce the available starting voltage, preheating current or discharge current in the lamp. The results can be poor or erratic starting or reduced system efficacy as some of the energy from the ballast is getting "short circuited" away from the intended lamp load. In T5 or CFL applications, excessive stray capacitance can also affect End Of Life circuit operation, causing the ballast to prematurely shut down.

In dual switched systems, or systems that use two or more ballasts within the same fixture, ballasts more subject to cross talk and interference due to capacitive effects. It is important the wiring be placed neatly without bunching up the excess in the wiring channel. Lamp leads can run parallel to each other but should not be bundled or tied together. Lamp leads should also trimmed when possible to eliminate excess lead length. It is also good to keep the output leads from one ballast away from those of the other ballast. Lamp leads should also be kept away from the AC input leads as this can cause undesired interference or EMI, which can affect other devices operating on the same power source.

In summary, the lamp lead wiring should be laid parallel into the fixture with excess length trimmed. Do not twist or otherwise bundle the leads together, and ensure no leads are caught or crimped between the ballast channel cover and the fixture body.

Remote and Tandem Mounting of Ballasts

As today's economics drive lower first costs, many fixture manufacturers increasingly use only one ballast to operate lamps in two or more fixtures. This tandem mounting scheme decreases the total number of ballasts needed for a given installation. The fixtures are typically interconnected with a wiring "whip" of flexible metal conduit with a number of wires inside. The whip brings the high frequency lamp leads from the ballast in one fixture to the lamp or lamps in a satellite fixture. Tandem operation has lamps operating in the fixture that has the ballast and also in the satellite fixture.

Remote mounting is when a ballast is located in a separate enclosure without lamps and wires to all the lamps run through a conduit or flexible whip to a remote fixture which contains the lamps.

In past years, ballasts were magnetic and operated at 60 Hz, and tandem or remote mounting scheme was only occasionally used, so issues with remote or tandem mounting were not so frequent. In today's energy efficient electronic ballasts, the frequency is much higher, usually greater than 40 kHz, and more fixtures are being tandem operated to manage first costs of a system. Tandem operation can lead to system issues such as poor or erratic starting and differences in light level during steady state lamp operation.

These issues develop when the combination of high operating frequency and parasitic capacitance from the wiring create unintended coupling between conductors or to earth ground. Each wire in the fixture and the interconnect whip will have a certain capacitance to other wires running parallel to it, and also a capacitance to earth ground. This unintended capacitive coupling creates a shunt path taking away some energy that was intended for the lamp load. This causes reductions in the available open circuit voltage need to strike the lamp or a loss of preheating energy. Both cases lead to poor or erratic starting in the remote fixture(s).

For some multiple lamp ballasts, certain lamp leads are at higher potential and should be connected to lamps that reside in the same fixture as the ballast. The ballast manufacturer may have specific recommendations as to which of the lamp leads can be utilized for the remote fixture of a tandem set, and restrictions on how long the wiring from ballast to lamp may be. Ballasts may also have different permissible wiring lengths per lamp lead color based on the application. Remote mounting applications may permit a longer wiring length than some tandem applications as the remote situation presents a uniform loss to all lamp leads. The tandem operation scheme may present different capacitances to different lamp leads that could result in poor starting and differences in light level during operation.

In some cases, these issues are compounded because the interconnect whip is carrying wires connected to two different ballasts. Since the ballasts are not likely to be exactly in phase, there can be additional losses due to capacitive phase cancellation between leads of the two different ballasts. There may also be system interactions where either ballast will work fine separately, but will not work together. In these cases, the interconnect whip may need to be shorter, limiting the distance between the fixtures, or two separate whips could be used.

As the ballast operating frequency gets higher, the capacitive shunting effect become more pronounced. Dimming ballasts typically are at the highest frequency when in deep dimming. Due to the effects of capacitive losses, lamps may appear at different intensities or drop out and may flicker due to losses of cathode heating energy. It is recommended that dimming ballasts not be remote mounted or used in tandem operation, all lamp wiring must stay within the fixture containing the dimming ballast.

Energy saving lamps may be more susceptible to starting issues when used in remote or tandem fixture operation. These lamps utilize a gas mixture that does not ionize as easily as full wattage lamps, and are more likely to have starting issues due to the reduced starting voltage resulting from the capacitive losses.

Remote starting distances are specified at room temperature using standard life, full wattage lamps, with one ballast driving all lamps located in the remote fixture through a single conduit at the specified distance. In view of the possible differences related to any specific application, it is advised that any tandem or remote mount application using one or more ballasts be tested in the final configuration to ensure the system will perform as expected in the intended environment.

See page E-1 for warranty information.

UltraMax® Professional Series
Instant Start Multi-Voltage 120–277V High-Efficiency
T8 Instant Start Ballasts For F17 (2 ft), F25 (3 ft), F32 (4 ft), F40 (5 ft) Lamps

72258 – GE132MAXP-L/ULTRA

UltraMax® P-Series Instant Start
Multi-Voltage High-Efficiency
1 – F32T8 120 to 277 "L" .77 BF UltraMax®P

- Energy-saving high-efficiency instant-start electronic ballast (>90%)
- Multi-voltage technology handles voltage from 120 to 277V
- UL Type CC Rating provides protection against arcing in electrical devices
- Anti-striation control for better light quality
- UL 55°C Ambient Temperature rating
- Cold temperature -22°F Minimum Starting Temperature

General characteristics

Ballast Type	Electronic – High-Efficiency Multivolt Instant Start
Starting Method	Instant start
Lamp Wiring	
Line Voltage Regulation(+/-)	10%
Ambient Temperature (MAX)	55°C (131°F)
Case Temperature (MAX)	70°C (158°F)
Ballast Factor	Low
Power Factor Correction	Active
Sound Rating	A (20-24 decibels)
Enclosure Type	Metal
Additional Info	Anti-striation control, Auto-restart, Inherently Thermally Protected, UL Class P

Electrical characteristics

Supply Current Frequency	50 Hz/60 Hz

Order information

10 Pack	Pallet Pack	DIY Pack	IP Pack
72258			

Dimensions

Wiring diagram – LFL 1A – see example on Page 10-61	
Case dimensions – Ref Drawing -A – see Page 10-62	
Length (L)	9.5 in (241 mm)
Width (W)	1.3 in (33 mm)
Height (H)	1.0 in (25.4 mm)
Mounting dimensions	
Mount Length (M)	8.9 in (226 mm)
Mount Width (X or F)	0.87 in (22 mm)
Mount Slots (MS)	0.3 in (8 mm)
Weight	0.6lbs
Exit Type	Side
Remote Mounting Distance to Lamp (F32T8)	18 ft
Remote Mounting Wire Gauge	18 AWG
Lead lengths	
Black	25 in (635 mm)
White	25 in (635 mm)
Blue	31 in (787 mm)
Red	37 in (940 mm)

Specifications by lamp and wattage

Lamp	# of Lamps	Line Volts (V)	System Watts (W)	Nom. Line Current (A)	System Ballast Factor	Ballast Efficacy Factor	Power Factor% (>=)	Crest Factor (<=)	THD% (<=)	Min. Starting Temp (°F/°C)
	1	120	25	0.22	.78	3.12	99	1.5	10	-22/-30
F32T8	1	277	25	0.10	.78	3.12	94	1.5	10	-22/-30
	1	120	24	0.21	.77	3.21	99	1.5	10	-22/-30
F32T8/WM	1	277	24	0.09	.77	3.21	94	1.5	10	-22/-30
	1	120	22	0.20	.81	3.68	99	1.5	10	-22/-30
F28T8	1	277	22	0.09	.81	3.68	94	1.5	10	-22/-30
	1	120	21	0.18	.77	3.67	99	1.5	10	-22/-30
F32T8/25W	1	277	21	0.08	.77	3.67	93	1.5	10	-22/-30
	1	120	21	0.18	.87	4.14	99	1.5	10	-22/-30
F25T8	1	277	21	0.08	.87	4.14	93	1.5	10	-22/-30
	1	120	15	0.13	.92	6.13	99	1.5	10	-22/-30
F17T8	1	277	15	0.07	.92	6.13	89	1.5	10	-22/-30
	1	120	14	0.10	.77	5.5	99	1.5	10	-22/-30
FE15T8	1	277	14	0.05	.77	5.5	87	1.5	10	-22/-30
	1	120	21	0.19	.80	3.81	99	1.5	10	0/-18
F25T12	1	277	21	0.09	.80	3.81	94	1.5	10	0/-18

Safety and performance

UL Class P UL Type 1 Outdoor UL Type CC UL Type HL FCC – CLASS A Non-Consumer

Product is compliant with material restriction requirements of RoHS

See page E-1 for warranty information.

UltraMax® Professional Series
Instant Start Multi-Voltage 120–277V High-Efficiency
T8 Instant Start Ballasts For F17 (2 ft), F25 (3 ft), F32 (4 ft), F40 (5 ft) Lamps

72259 – GE132MAXP-N/ULTRA

UltraMax® P-Series Instant Start
Multi-Voltage High-Efficiency
1 – F32T8 120 to 277 "N" .87 BF UltraMax®P

- Energy-saving high-efficiency instant-start electronic ballast (>90%)
- Multi-voltage technology handles voltage from 120 to 277V
- UL Type CC Rating provides protection against arcing in electrical devices
- Anti-striation control for better light quality
- UL 55°C Ambient Temperature rating
- Cold temperature -22°F Minimum Starting Temperature

General characteristics

Ballast Type	Electronic – High-Efficiency Multivolt Instant Start
Starting Method	Instant start
Lamp Wiring	
Line Voltage Regulation(+/-)	10%
Ambient Temperature (MAX)	55°C (131°F)
Case Temperature (MAX)	70°C (158°F)
Ballast Factor	Normal
Power Factor Correction	Active
Sound Rating	A (20-24 decibels)
Enclosure Type	Metal
Additional Info	Anti-striation control, Auto-restart, Inherently Thermally Protected, UL Class P

Electrical characteristics

Supply Current Frequency	50 Hz/60 Hz

Order information

10 Pack	Pallet Pack	DIY Pack	IP Pack
72259			

Dimensions

Wiring diagram – LFL 1A – see example on Page 10-61	
Case dimensions – Ref Drawing -A – see Page 10-62	
Length (L)	9.5 in (241 mm)
Width (W)	1.3 in (33 mm)
Height (H)	1.0 in (25.4 mm)
Mounting dimensions	
Mount Length (M)	8.9 in (226 mm)
Mount Width (X or F)	0.87 in (22 mm)
Mount Slots (MS)	0.3 in (8 mm)
Weight	0.6lbs
Exit Type	Side
Remote Mounting Distance to Lamp (F32T8)	18 ft
Remote Mounting Wire Gauge	18 AWG
Lead lengths	
Black	25 in (635 mm)
White	25 in (635 mm)
Blue	31 in (787 mm)
Red	37 in (940 mm)

Specifications by lamp and wattage

Lamp	# of Lamps	Line Volts (V)	System Watts (W)	Nom. Line Current (A)	System Ballast Factor	Ballast Efficacy Factor	Power Factor% (>=)	Crest Factor (<=)	THD% (<=)	Min. Starting Temp (°F/°C)
	1	120	28	0.24	.88	3.14	99	1.5	10	-22/-30
F32T8	1	277	28	0.11	.88	3.14	98	1.5	10	-22/-30
	1	120	27	0.23	.87	3.22	99	1.5	10	-22/-30
F32T8/WM	1	277	27	0.10	.87	3.22	98	1.5	10	-22/-30
	1	120	25	0.22	.89	3.56	99	1.5	10	-22/-30
F28T8	1	277	25	0.10	.89	3.56	98	1.5	10	-22/-30
	1	120	24	0.19	.88	3.67	99	1.5	10	-22/-30
F32T8/25W	1	277	23	0.09	.88	3.83	94	1.5	10	-22/-30
	1	120	23	0.19	.94	4.09	99	1.5	10	-22/-30
F25T8	1	277	24	0.09	.94	3.92	94	1.5	10	-22/-30
	1	120	17	0.14	.98	5.76	99	1.5	10	-22/-30
F17T8	1	277	17	0.07	.98	5.76	90	1.5	10	-22/-30
	1	120	14	0.12	.92	6.57	99	1.5	10	-22/-30
FE15T8	1	277	14	0.06	.92	6.57	88	1.5	10	-22/-30
	1	120	25	0.21	.94	3.76	99	1.5	10	0/-18
F25T12	1	277	25	0.10	.94	3.76	94	1.5	10	0/-18

Safety and performance

UL Class P UL Type 1 Outdoor UL Type CC UL Type HL FCC – CLASS A Non-Consumer

Product is compliant with material restriction requirements of RoHS

See page E-1 for warranty information.

UltraMax® Professional Series
Instant Start Multi-Voltage 120–277V High-Efficiency
T8 Instant Start Ballasts For F17 (2 ft), F25 (3 ft), F32 (4 ft), F40 (5 ft) Lamps

63885 – GE132MAXP-H/ULTRA

UltraMax® P-Series Instant Start
Multi-Voltage High-Efficiency
1 – F32T8 120 to 277 "H" 1.18 BF UltraMax®P

- Energy-saving high-efficiency instant-start electronic ballast (>90%)
- Multi-voltage technology handles voltage from 120 to 277V
- UL Type CC Rating provides protection against arcing in electrical devices
- Anti-striation control for better light quality
- UL 55°C Ambient Temperature rating
- Cold temperature -22°F Minimum Starting Temperature

General characteristics

Ballast Type	Electronic – High-Efficiency Multivolt Instant Start
Starting Method	Instant start
Lamp Wiring	
Line Voltage Regulation(+/-)	10%
Ambient Temperature (MAX)	55°C (131°F)
Case Temperature (MAX)	90°C (194°F)
Ballast Factor	High
Power Factor Correction	Active
Sound Rating	A (20-24 decibels)
Enclosure Type	Metal
Additional Info	Anti-striation control, Auto-restart, Inherently Thermally Protected, UL Class P

Electrical characteristics

Supply Current Frequency	50 Hz/60 Hz

Order information

10 Pack	Pallet Pack	DIY Pack	IP Pack
63885			

Dimensions

Wiring diagram – LFL 1A – see example on Page 10-61	
Case dimensions – Ref Drawing -A – see Page 10-62	
Length (L)	9.5 in (241 mm)
Width (W)	1.3 in (33 mm)
Height (H)	1.0 in (25.4 mm)
Mounting dimensions	
Mount Length (M)	8.9 in (226 mm)
Mount Width (X or F)	0.87 in (22 mm)
Mount Slots (MS)	0.3 in (8 mm)
Weight	0.6lbs
Exit Type	Side
Remote Mounting Distance to Lamp (F32T8)	18 ft
Remote Mounting Wire Gauge	18 AWG
Lead lengths	
Black	25 in (635 mm)
White	25 in (635 mm)
Blue	31 in (787 mm)
Red	37 in (940 mm)

Specifications by lamp and wattage

Lamp	# of Lamps	Line Volts (V)	System Watts (W)	Nom. Line Current (A)	System Ballast Factor	Ballast Efficacy Factor	Power Factor% (>=)	Crest Factor (<=)	THD% (<=)	Min. Starting Temp (°F/°C)
	1	120	38	0.32	1.18	3.11	99	1.5	10	-22/-30
F32T8	1	277	37	0.14	1.18	3.19	97	1.5	10	-22/-30
	1	120	36	0.30	1.15	3.19	99	1.5	10	-22/-30
F32T8/WM	1	277	35	0.13	1.15	3.29	97	1.5	10	-22/-30
	1	120	33	0.28	1.15	3.48	99	1.5	10	-22/-30
F28T8	1	277	33	0.12	1.15	3.48	96	1.5	10	-22/-30
	1	120	30	0.25	1.20	4.00	99	1.5	10	-22/-30
F32T8/25W	1	277	30	0.11	1.20	4.00	96	1.5	10	-22/-30
	1	120	30	0.25	1.20	4.00	99	1.5	10	-22/-30
F25T8	1	277	30	0.11	1.20	4.00	96	1.5	10	-22/-30
	1	120	22	0.18	1.23	5.59	99	1.5	10	-22/-30
F17T8	1	277	22	0.09	1.23	5.59	93	1.5	10	-22/-30
	1	120	19	0.16	1.20	6.32	99	1.5	10	-22/-30
FE15T8	1	277	19	0.08	1.20	6.32	91	1.5	10	-22/-30
	1	120	33	0.27	1.20	3.64	99	1.5	10	0/-18
F25T12	1	277	32	0.12	1.20	3.75	96	1.5	10	0/-18

Safety and performance

UL Class P · UL Type 1 Outdoor · UL Type CC · UL Type HL · FCC – CLASS A Non-Consumer

Product is compliant with material restriction requirements of RoHS

UltraMax® Professional Series
Instant Start Multi-Voltage 120–277V High-Efficiency
T8 Instant Start Ballasts For F17 (2 ft), F25 (3 ft), F32 (4 ft), F40 (5 ft) Lamps

73190 – GE232MAXP-H/ULTRA

UltraMax® P-Series Instant Start
Multi-Voltage High-Efficiency

2 or 1 – F32T8 120 to 277 "H" 1.18 BF UltraMax®P

- Energy-saving high-efficiency instant-start electronic ballast (>90%)
- Multi-voltage technology handles voltage from 120 to 277V
- UL Type CC Rating provides protection against arcing in electrical devices
- Anti-striation control for better light quality
- UL 55°C Ambient Temperature rating
- Cold temperature -22°F Minimum Starting Temperature

General characteristics

Ballast Type	Electronic – High-Efficiency Multivolt Instant Start
Starting Method	Instant start
Lamp Wiring	Parallel
Line Voltage Regulation(+/-)	10%
Ambient Temperature (MAX)	55°C (131°F)
Case Temperature (MAX)	90°C (194°F)
Ballast Factor	High
Power Factor Correction	Active
Sound Rating	A (20-24 decibels)
Enclosure Type	Metal
Additional Info	Anti-striation control, Auto-restart, Inherently Thermally Protected, UL Class P

Electrical characteristics

Supply Current Frequency	50 Hz/60 Hz

Order information

10 Pack	Pallet Pack	DIY Pack	IP Pack
73190	73191		

Dimensions

Wiring diagram – LFL 1B – see example on Page 10-61	
Case dimensions – Ref Drawing -A – see Page 10-62	
Length (L)	9.5 in (241 mm)
Width (W)	1.3 in (33 mm)
Height (H)	1.0 in (25.4 mm)
Mounting dimensions	
Mount Length (M)	8.9 in (226 mm)
Mount Width (X or F)	0.87 in (22 mm)
Mount Slots (MS)	0.3 in (8 mm)
Weight	0.7lbs
Exit Type	Side
Remote Mounting Distance to Lamp (F32T8)	18 ft
Remote Mounting Wire Gauge	18 AWG
Lead lengths	
Black	25 in (635 mm)
White	25 in (635 mm)
Blue	31 in (787 mm)
Red	37 in (940 mm)

Specifications by lamp and wattage

Lamp	# of Lamps	Line Volts (V)	System Watts (W)	Nom. Line Current (A)	System Ballast Factor	Ballast Efficacy Factor	Power Factor% (>=)	Crest Factor (<=)	THD% (<=)	Min. Starting Temp (°F/°C)
	2	120	74	0.62	1.19	1.61	99	1.5	10	-22/-30
	2	277	73	0.26	1.19	1.63	98	1.5	10	-22/-30
	1	120	47	0.40	1.38	2.94	99	1.5	10	-22/-30
F32T8	1	277	46	0.18	1.38	3.00	96	1.5	20	-22/-30
	2	120	70	0.59	1.16	1.66	99	1.5	10	22/-30
	2	277	69	0.26	1.16	1.68	98	1.5	10	22/-30
	1	120	43	0.37	1.37	3.19	99	1.5	10	22/-30
F32T8/WM	1	277	43	0.17	1.37	3.19	95	1.5	15	22/-30
	2	120	65	0.55	1.14	1.75	99	1.5	10	22/-30
	2	277	64	0.24	1.14	1.78	97	1.5	10	22/-30
	1	120	40	0.34	1.34	3.35	99	1.5	10	22/-30
F28T8	1	277	41	0.16	1.34	3.27	94	1.5	20	22/-30
	2	120	60	0.51	1.16	1.93	99	1.5	10	22/-30
	2	277	60	0.22	1.16	1.93	97	1.5	15	22/-30
	1	120	38	0.32	1.37	3.60	99	1.5	15	22/-30
F32T8/25W	1	277	38	0.15	1.37	3.60	94	1.5	20	22/-30
	2	120	62	0.52	1.16	1.87	99	1.5	10	22/-30
	2	277	61	0.22	1.16	1.90	97	1.5	15	22/-30
	1	120	38	0.32	1.37	3.61	99	1.5	15	22/-30
F25T8	1	277	38	0.15	1.37	3.61	94	1.5	20	22/-30
	2	120	41	0.36	1.17	2.85	99	1.5	10	22/-30
	2	277	41	0.17	1.17	2.85	95	1.5	20	22/-30
	1	120	26	0.23	1.37	5.27	99	1.5	15	22/-30
F17T8	1	277	27	0.12	1.37	5.07	90	1.5	20	22/-30
	2	120	32	0.29	1.02	3.19	99	1.5	15	22/-30
	2	277	33	0.14	1.02	3.09	93	1.5	20	22/-30
	1	120	23	0.19	1.21	5.26	98	1.5	15	22/-30
FE15T8	1	277	22	0.10	1.21	5.50	87	1.5	20	22/-30
	1	120	56	0.46	.66	1.18	99	1.5	10	22/-30
F40T8	1	277	55	0.21	.66	1.20	94	1.5	15	22/-30
	2	120	64	0.54	1.11	1.73	99	1.5	10	0/-18
	2	277	63	0.24	1.11	1.76	97	1.5	10	0/-18
	1	120	40	0.35	1.36	3.40	99	1.5	10	0/-18
F25T12	1	277	40	0.16	1.36	3.40	94	1.5	15	0/-18

Safety and performance

UL Class P · UL Type 1 Outdoor · UL Type CC · UL Type HL · FCC – CLASS A Non-Consumer

Product is compliant with material restriction requirements of RoHS

See page E-1 for warranty information.

UltraMax® Professional Series
Instant Start Multi-Voltage 120–277V High-Efficiency
T8 Instant Start Ballasts For F17 (2 ft), F25 (3 ft), F32 (4 ft), F40 (5 ft) Lamps

72262 – GE232MAXP-L/ULTRA

UltraMax® P-Series Instant Start
Multi-Voltage High-Efficiency
2 or 1 – F32T8 120 to 277 "L" .77 BF UltraMax®P

- Energy-saving high-efficiency instant-start electronic ballast (>90%)
- Multi-voltage technology handles voltage from 120 to 277V
- UL Type CC Rating provides protection against arcing in electrical devices
- Anti-striation control for better light quality
- UL 55°C Ambient Temperature rating
- Cold temperature -22°F Minimum Starting Temperature

General characteristics

Ballast Type	Electronic – High-Efficiency Multivolt Instant Start
Starting Method	Instant start
Lamp Wiring	Parallel
Line Voltage Regulation(+/-)	10%
Ambient Temperature (MAX)	55°C (131°F)
Case Temperature (MAX)	70°C (158°F)
Ballast Factor	Low
Power Factor Correction	Active
Sound Rating	A (20-24 decibels)
Enclosure Type	Metal
Additional Info	Anti-striation control, Auto-restart, Inherently Thermally Protected, UL Class P

Electrical characteristics

Supply Current Frequency	50 Hz/60 Hz

Order information

10 Pack	Pallet Pack	DIY Pack	IP Pack
72262	72263		

Dimensions

Wiring diagram – LFL 1B – see example on Page 10-61	
Case dimensions – Ref Drawing -A – see Page 10-62	
Length (L)	9.5 in (241 mm)
Width (W)	1.3 in (33 mm)
Height (H)	1.0 in (25.4 mm)
Mounting dimensions	
Mount Length (M)	8.9 in (226 mm)
Mount Width (X or F)	0.87 in (22 mm)
Mount Slots (MS)	0.3 in (8 mm)
Weight	0.7lbs
Exit Type	Side
Remote Mounting Distance to Lamp (F32T8)	18 ft
Remote Mounting Wire Gauge	18 AWG
Lead lengths	
Black	25 in (635 mm)
White	25 in (635 mm)
Blue	31 in (787 mm)
Red	37 in (940 mm)

Specifications by lamp and wattage

Lamp	# of Lamps	Line Volts (V)	System Watts (W)	Nom. Line Current (A)	System Ballast Factor	Ballast Efficacy Factor	Power Factor% (>=)	Crest Factor (<=)	THD% (<=)	Min. Starting Temp (°F/°C)
	2	120	48	0.42	.78	1.63	99	1.5	10	-22/-30
	2	277	48	0.19	.78	1.63	98	1.5	10	-22/-30
	1	120	30	0.24	.96	3.20	99	1.5	10	-22/-30
F32T8	1	277	30	0.11	.96	3.20	95	1.5	10	-22/-30
	2	120	46	0.39	.77	1.67	99	1.5	10	-22/-30
	2	277	46	0.17	.77	1.67	98	1.5	10	-22/-30
	1	120	28	0.22	.77	2.75	99	1.5	10	-22/-30
F32T8/WM	1	277	28	0.11	.77	2.75	94	1.5	10	-22/-30
	2	120	43	0.36	.77	1.79	99	1.5	10	-22/-30
	2	277	42	0.16	.77	1.83	97	1.5	10	-22/-30
	1	120	26	0.21	.77	2.96	99	1.5	10	-22/-30
F28T8	1	277	26	0.10	.77	2.96	94	1.5	10	-22/-30
	2	120	39	0.33	.78	2.00	99	1.5	10	-22/-30
	2	277	39	0.15	.78	2.00	96	1.5	10	-22/-30
	1	120	22	0.18	.78	3.55	98	1.5	10	-22/-30
F32T8/25W	1	277	22	0.09	.78	3.55	93	1.5	10	-22/-30
	2	120	40	0.34	.78	1.95	99	1.5	10	-22/-30
	2	277	40	0.15	.78	1.95	96	1.5	10	-22/-30
	1	120	23	0.21	.96	4.17	99	1.5	10	-22/-30
F25T8	1	277	24	0.10	.96	4.00	93	1.5	15	-22/-30
	2	120	28	0.24	.79	2.82	99	1.5	10	-22/-30
	2	277	29	0.11	.79	2.72	94	1.5	10	-22/-30
	1	120	17	0.15	.98	5.76	99	1.5	10	-22/-30
F17T8	1	277	18	0.08	.98	5.44	90	1.5	10	-22/-30
	2	120	23	0.20	.78	3.39	99	1.5	10	-22/-30
	2	277	23	0.10	.78	3.39	91	1.5	15	-22/-30
	1	120	14	0.13	.78	5.57	99	1.5	10	-22/-30
FE15T8	1	277	15	0.07	.78	5.20	87	1.5	10	-22/-30
	2	120	42	0.35	.80	1.90	99	1.5	10	0/-18
	2	277	41	0.15	.80	1.95	97	1.5	10	0/-18
	1	120	24	0.21	.80	3.33	99	1.5	10	0/-18
F25T12	1	277	24	0.10	.80	3.33	95	1.5	10	0/-18

Safety and performance

c UL us LISTED; UL Class P; UL Type 1 Outdoor; UL Type CC; UL Type HL; FCC – CLASS A Non-Consumer

NEMA Premium; Product is compliant with material restriction requirements of RoHS

See page E-1 for warranty information.

UltraMax® Professional Series
Instant Start Multi-Voltage 120–277V High-Efficiency
T8 Instant Start Ballasts For F17 (2 ft), F25 (3 ft), F32 (4 ft), F40 (5 ft) Lamps

72266 – GE232MAXP-N/ULTRA

UltraMax® P-Series Instant Start
Multi-Voltage High-Efficiency

2 or 1 – F32T8 120 to 277 "N" .87 BF UltraMax®P

- Energy-saving high-efficiency instant-start electronic ballast (>90%)
- Multi-voltage technology handles voltage from 120 to 277V
- UL Type CC Rating provides protection against arcing in electrical devices
- Anti-striation control for better light quality
- UL 55°C Ambient Temperature rating
- Cold temperature -22°F Minimum Starting Temperature

General characteristics

Ballast Type	Electronic – High-Efficiency Multivolt Instant Start
Starting Method	Instant start
Lamp Wiring	Parallel
Line Voltage Regulation(+/-)	10%
Ambient Temperature (MAX)	55°C (131°F)
Case Temperature (MAX)	70°C (158°F)
Ballast Factor	Normal
Power Factor Correction	Active
Sound Rating	A (20-24 decibels)
Enclosure Type	Metal
Additional Info	Anti-striation control, Auto-restart, Inherently Thermally Protected, UL Class P

Electrical characteristics

Supply Current Frequency	50 Hz/60 Hz

Order information

10 Pack	Pallet Pack	DIY Pack	IP Pack
72266	72267	72268	

Dimensions

Wiring diagram – LFL 1B – see example on Page 10-61	
Case dimensions – Ref Drawing -A – see Page 10-62	
Length (L)	9.5 in (241 mm)
Width (W)	1.3 in (33 mm)
Height (H)	1.0 in (25.4 mm)
Mounting dimensions	
Mount Length (M)	8.9 in (226 mm)
Mount Width (X or F)	0.87 in (22 mm)
Mount Slots (MS)	0.3 in (8 mm)
Weight	0.7lbs
Exit Type	Side
Remote Mounting Distance to Lamp (F32T8)	18 ft
Remote Mounting Wire Gauge	18 AWG
Lead lengths	
Black	25 in (635 mm)
White	25 in (635 mm)
Blue	31 in (787 mm)
Red	37 in (940 mm)

Specifications by lamp and wattage

Lamp	# of Lamps	Line Volts (V)	System Watts (W)	Nom. Line Current (A)	System Ballast Factor	Ballast Efficacy Factor	Power Factor% (>=)	Crest Factor (<=)	THD% (<=)	Min. Starting Temp (°F/°C)
	2	120	54	0.47	.88	1.63	99	1.5	10	-22/-30
	2	277	53	0.20	.88	1.66	98	1.5	10	-22/-30
	1	120	31	0.26	1.08	3.48	99	1.5	10	-22/-30
F32T8	1	277	31	0.12	1.08	3.48	96	1.5	10	-22/-30
	2	120	52	0.44	.87	1.67	99	1.5	10	-22/-30
	2	277	51	0.19	.87	1.71	98	1.5	10	-22/-30
	1	120	29	0.25	1.07	3.69	99	1.5	10	-22/-30
F32T8/WM	1	277	29	0.12	1.07	3.69	96	1.5	10	-22/-30
	2	120	48	0.40	.85	1.77	99	1.5	10	-22/-30
	2	277	47	0.17	.85	1.81	98	1.5	10	-22/-30
	1	120	27	0.24	1.05	3.89	99	1.5	10	-22/-30
F28T8	1	277	27	0.11	1.05	3.89	95	1.5	10	-22/-30
	2	120	44	0.37	.87	1.98	99	1.5	10	-22/-30
	2	277	43	0.16	.87	2.02	98	1.5	10	-22/-30
	1	120	25	0.23	.87	3.48	99	1.5	10	-22/-30
F32T8/25W	1	277	25	0.10	.87	3.48	94	1.5	10	-22/-30
	2	120	44	0.38	.87	1.98	99	1.5	10	-22/-30
	2	277	44	0.16	.87	1.98	98	1.5	10	-22/-30
	1	120	26	0.23	1.09	4.19	99	1.5	10	-22/-30
F25T8	1	277	26	0.11	1.09	4.19	94	1.5	10	-22/-30
	2	120	31	0.27	.88	2.84	99	1.5	10	-22/-30
	2	277	31	0.12	.88	2.84	96	1.5	10	-22/-30
	1	120	19	0.17	1.09	5.74	99	1.5	10	-22/-30
F17T8	1	277	19	0.08	1.09	5.74	90	1.5	20	-22/-30
	2	120	25	0.21	.91	3.64	99	1.5	10	-22/-30
	2	277	25	0.10	.91	3.64	93	1.5	15	-22/-30
	1	120	16	0.14	.91	5.69	99	1.5	10	-22/-30
FE15T8	1	277	16	0.07	.91	5.69	88	1.5	15	-22/-30
	2	120	46	0.39	.93	2.02	99	1.5	10	0/-18
	2	277	46	0.17	.93	2.02	98	1.5	10	0/-18
	1	120	27	0.24	.93	3.44	99	1.5	10	0/-18
F25T12	1	277	27	0.11	.93	3.44	95	1.5	10	0/-18

Safety and performance

UL Class P UL Type 1 Outdoor UL Type CC UL Type HL FCC – CLASS A Non-Consumer

Product is compliant with material restriction requirements of RoHS

See page E-1 for warranty information.

UltraMax® Professional Series
Instant Start Multi-Voltage 120–277V High-Efficiency
T8 Instant Start Ballasts For F17 (2 ft), F25 (3 ft), F32 (4 ft), F40 (5 ft) Lamps

71421 – GE232MAXP-N+

UltraMax® P-Series Instant Start
Multi-Voltage High-Efficiency

2 or 1 – F32T8 120 to 277 "N+" 1.0 BF UltraMax®P

- Energy-saving high-efficiency instant-start electronic ballast (>90%)
- Multi-voltage technology handles voltage from 120 to 277V
- UL Type CC Rating provides protection against arcing in electrical devices
- Anti-striation control for better light quality
- UL 55°C Ambient Temperature rating
- Cold temperature -22°F Minimum Starting Temperature

General characteristics

Ballast Type	Electronic – High-Efficiency Multivolt Instant Start
Starting Method	Instant start
Lamp Wiring	Parallel
Line Voltage Regulation(+/-)	10%
Ambient Temperature (MAX)	55°C (131°F)
Case Temperature (MAX)	70°C (158°F)
Ballast Factor	Normal-High
Power Factor Correction	Active
Sound Rating	A (20-24 decibels)
Enclosure Type	Metal
Additional Info	Anti-striation control, Auto-restart, Inherently Thermally Protected, UL Class P

Electrical characteristics

Supply Current Frequency	50 Hz/60 Hz

Order information

10 Pack	Pallet Pack	DIY Pack	IP Pack
71421			

Dimensions

Wiring diagram – LFL 1B – see example on Page 10-61	
Case dimensions – Ref Drawing -A – see Page 10-62	
Length (L)	9.5 in (241 mm)
Width (W)	1.3 in (33 mm)
Height (H)	1.0 in (25.4 mm)
Mounting dimensions	
Mount Length (M)	8.9 in (226 mm)
Mount Width (X or F)	0.87 in (22 mm)
Mount Slots (MS)	0.3 in (8 mm)
Weight	0.7lbs
Exit Type	Side
Remote Mounting Distance to Lamp (F32T8)	18 ft
Remote Mounting Wire Gauge	18 AWG
Lead lengths	
Black	25 in (635 mm)
White	25 in (635 mm)
Blue	31 in (787 mm)
Red	37 in (940 mm)

Specifications by lamp and wattage

Lamp	# of Lamps	Line Volts (V)	System Watts (W)	Nom. Line Current (A)	System Ballast Factor	Ballast Efficacy Factor	Power Factor% (>=)	Crest Factor (<=)	THD% (<=)	Min. Starting Temp (°F/°C)
	2	120	63	0.53	1.01	1.60	99	1.5	10	-22/-30
	2	277	62	0.22	1.01	1.63	98	1.5	10	-22/-30
	1	120	39	0.33	1.17	3.00	99	1.5	10	-22/-30
F32T8	1	277	39	0.14	1.17	3.00	96	1.5	10	-22/-30
	2	120	60	0.50	1.00	1.67	99	1.5	10	-22/-30
	2	277	60	0.22	1.00	1.67	98	1.5	10	-22/-30
	1	120	37	0.30	1.16	3.14	99	1.5	10	-22/-30
F32T8/WM	1	277	37	0.14	1.16	3.14	96	1.5	10	-22/-30
	2	120	55	0.46	.98	1.78	99	1.5	10	-22/-30
	2	277	55	0.21	.98	1.78	98	1.5	10	-22/-30
	1	120	34	0.28	1.16	3.41	99	1.5	10	-22/-30
F28T8	1	277	34	0.13	1.16	3.41	95	1.5	10	-22/-30
	2	120	51	0.43	1.00	1.96	99	1.5	10	-22/-30
	2	277	51	0.19	1.00	1.96	98	1.5	10	-22/-30
	1	120	31	0.26	1.00	3.23	99	1.5	10	-22/-30
F32T8/25W	1	277	31	0.12	1.00	3.23	95	1.5	15	-22/-30
	2	120	51	0.43	1.00	1.96	99	1.5	10	-22/-30
	2	277	51	0.19	1.00	1.96	98	1.5	10	-22/-30
	1	120	31	0.26	1.19	3.84	99	1.5	10	-22/-30
F25T8	1	277	31	0.12	1.19	3.84	95	1.5	15	-22/-30
	2	120	37	0.31	1.01	2.73	99	1.5	10	-22/-30
	2	277	37	0.14	1.01	2.73	97	1.5	10	-22/-30
	1	120	24	0.20	1.19	4.96	99	1.5	10	-22/-30
F17T8	1	277	24	0.10	1.19	4.96	91	1.5	20	-22/-30
	2	120	30	0.26	1.00	3.33	99	1.5	10	-22/-30
	2	277	31	0.12	1.00	3.23	94	1.5	15	-22/-30
	1	120	20	0.17	1.00	5.00	99	1.5	10	-22/-30
FE15T8	1	277	21	0.09	1.00	4.76	89	1.5	15	-22/-30
	2	120	55	0.46	.98	1.78	99	1.5	10	0/-18
	2	277	54	0.20	.98	1.81	98	1.5	10	0/-18
	1	120	34	0.28	.98	2.88	99	1.5	10	0/-18
F25T12	1	277	34	0.13	.98	2.88	96	1.5	10	0/-18

Safety and performance

UL Class P UL Type 1 Outdoor UL Type CC UL Type HL FCC – CLASS A Non-Consumer

Product is compliant with material restriction requirements of RoHS

See page E-1 for warranty information.

UltraMax® Professional Series
Instant Start Multi-Voltage 120–277V High-Efficiency
T8 Instant Start Ballasts For F17 (2 ft), F25 (3 ft), F32 (4 ft), F40 (5 ft) Lamps

78619 – GE332MAXP-H/ULTRA

UltraMax® P-Series Instant Start
Multi-Voltage High-Efficiency

3 or 2 – F32T8 120 to 277 "H" 1.18 BF UltraMax®P

- Energy-saving high-efficiency instant-start electronic ballast (>90%)
- Multi-voltage technology handles voltage from 120 to 277V
- UL Type CC Rating provides protection against arcing in electrical devices
- Anti-striation control for better light quality
- UL 55°C Ambient Temperature rating
- Cold temperature -22°F Minimum Starting Temperature

General characteristics

Ballast Type	Electronic – High-Efficiency Multivolt Instant Start
Starting Method	Instant start
Lamp Wiring	Parallel
Line Voltage Regulation(+/-)	10%
Ambient Temperature (MAX)	55°C (131°F)
Case Temperature (MAX)	90°C (194°F)
Ballast Factor	High
Power Factor Correction	Active
Sound Rating	A (20-24 decibels)
Enclosure Type	Metal
Additional Info	Anti-striation control, Auto-restart, Inherently Thermally Protected, UL Class P

Electrical characteristics

Supply Current Frequency	50 Hz/60 Hz

Order information

10 Pack	Pallet Pack	DIY Pack	IP Pack
78619	78620		

Dimensions

Wiring diagram – LFL 1C – see example on Page 10-61	
Case dimensions – Ref Drawing -A – see Page 10-62	
Length (L)	9.5 in (241 mm)
Width (W)	1.3 in (33 mm)
Height (H)	1.0 in (25.4 mm)
Mounting dimensions	
Mount Length (M)	8.9 in (226 mm)
Mount Width (X or F)	0.87 in (22 mm)
Mount Slots (MS)	0.3 in (8 mm)
Weight	0.9lbs
Exit Type	Side
Remote Mounting Distance to Lamp (F32T8)	18 ft
Remote Mounting Wire Gauge	18 AWG
Lead lengths	
Black	25 in (635 mm)
White	25 in (635 mm)
Blue	31 in (787 mm)
Red	37 in (940 mm)

Specifications by lamp and wattage

Lamp	# of Lamps	Line Volts (V)	System Watts (W)	Nom. Line Current (A)	System Ballast Factor	Ballast Efficacy Factor	Power Factor% (>=)	Crest Factor (<=)	THD% (<=)	Min. Starting Temp (°F/°C)
	3	120	110	0.93	1.18	1.10	99	1.5	10	-22/-30
	3	277	108	0.40	1.18	1.12	98	1.5	10	-22/-30
	2	120	85	0.74	1.30	1.53	99	1.5	10	-22/-30
F32T8	2	277	84	0.32	1.30	1.55	98	1.5	10	-22/-30
	3	120	103	0.86	1.13	1.07	99	1.5	10	-22/-30
	3	277	101	0.36	1.13	1.09	98	1.5	10	-22/-30
	2	120	79	0.68	1.26	1.59	99	1.5	10	-22/-30
F32T8/WM	2	277	78	0.30	1.26	1.62	98	1.5	10	-22/-30
	3	120	95	0.82	1.14	1.20	99	1.5	10	-22/-30
	3	277	94	0.35	1.14	1.21	98	1.5	10	-22/-30
	2	120	73	0.63	1.28	1.75	99	1.5	10	-22/-30
F28T8	2	277	72	0.27	1.28	1.78	97	1.5	10	-22/-30
	3	120	91	0.79	1.18	1.30	99	1.5	10	-22/-30
	3	277	90	0.34	1.18	1.31	98	1.5	10	-22/-30
	2	120	70	0.59	1.26	1.80	99	1.5	10	-22/-30
F32T8/25W	2	277	68	0.26	1.26	1.85	97	1.5	10	-22/-30
	3	120	90	0.79	1.17	1.30	99	1.5	10	-22/-30
	3	277	90	0.34	1.17	1.30	98	1.5	10	-22/-30
	2	120	70	0.59	1.32	1.89	99	1.5	10	-22/-30
F25T8	2	277	68	0.26	1.32	1.94	97	1.5	10	-22/-30
	3	120	61	0.53	1.18	1.93	99	1.5	10	-22/-30
	3	277	60	0.23	1.18	1.97	97	1.5	10	-22/-30
	2	120	47	0.41	1.32	2.81	99	1.5	10	-22/-30
F17T8	2	277	47	0.19	1.32	2.81	95	1.5	15	-22/-30
	3	120	50	0.42	1.03	2.06	99	1.5	10	-22/-30
	3	277	50	0.20	1.03	2.06	97	1.5	10	-22/-30
	2	120	39	0.33	1.13	2.90	99	1.5	10	-22/-30
FE15T8	2	277	39	0.16	1.13	2.90	95	1.5	15	-22/-30
	2	120	102	0.85	1.24	1.22	99	1.5	10	-22/-30
F40T8	2	277	101	0.37	1.24	1.23	97	1.5	10	-22/-30
	3	120	94	0.81	1.10	1.17	99	1.5	10	0/-18
	3	277	92	0.35	1.10	1.20	98	1.5	10	0/-18
	2	120	73	0.63	1.23	1.68	99	1.5	10	0/-18
F25T12	2	277	73	0.27	1.23	1.68	97	1.5	10	0/-18

Safety and performance

UL Class P · UL Type 1 Outdoor · UL Type CC · UL Type HL · FCC – CLASS A Non-Consumer

Product is compliant with material restriction requirements of RoHS

See page E-1 for warranty information.

UltraMax® Professional Series
Instant Start Multi-Voltage 120–277V High-Efficiency
T8 Instant Start Ballasts For F17 (2 ft), F25 (3 ft), F32 (4 ft), F40 (5 ft) Lamps

78621 – GE332MAXP-L/ULTRA

UltraMax® P-Series Instant Start
Multi-Voltage High-Efficiency
3 or 2 – F32T8 120 to 277 "L" .77 BF UltraMax®P

- Energy-saving high-efficiency instant-start electronic ballast (>90%)
- Multi-voltage technology handles voltage from 120 to 277V
- UL Type CC Rating provides protection against arcing in electrical devices
- Anti-striation control for better light quality
- UL 55°C Ambient Temperature rating
- Cold temperature -22°F Minimum Starting Temperature

General characteristics

Ballast Type	Electronic – High-Efficiency Multivolt Instant Start
Starting Method	Instant start
Lamp Wiring	Parallel
Line Voltage Regulation(+/-)	10%
Ambient Temperature (MAX)	55°C (131°F)
Case Temperature (MAX)	70°C (158°F)
Ballast Factor	Low
Power Factor Correction	Active
Sound Rating	A (20-24 decibels)
Enclosure Type	Metal
Additional Info	Anti-striation control, Auto-restart, Inherently Thermally Protected, UL Class P

Electrical characteristics

Supply Current Frequency	50 Hz/60 Hz

Order information

10 Pack	Pallet Pack	DIY Pack	IP Pack
78621			

Dimensions

Wiring diagram – LFL 1C – see example on Page 10-61	
Case dimensions – Ref Drawing -A – see Page 10-62	
Length (L)	9.5 in (241 mm)
Width (W)	1.3 in (33 mm)
Height (H)	1.0 in (25.4 mm)
Mounting dimensions	
Mount Length (M)	8.9 in (226 mm)
Mount Width (X or F)	0.87 in (22 mm)
Mount Slots (MS)	0.3 in (8 mm)
Weight	0.8lbs
Exit Type	Side
Remote Mounting Distance to Lamp (F32T8)	18 ft
Remote Mounting Wire Gauge	18 AWG
Lead lengths	
Black	25 in (635 mm)
White	25 in (635 mm)
Blue	31 in (787 mm)
Red	37 in (940 mm)

Specifications by lamp and wattage

Lamp	# of Lamps	Line Volts (V)	System Watts (W)	Nom. Line Current (A)	System Ballast Factor	Ballast Efficacy Factor	Power Factor% (>=)	Crest Factor (<=)	THD% (<=)	Min. Starting Temp (°F/°C)
	3	120	73	0.61	.78	1.07	99	1.5	10	-22/-30
	3	277	72	0.26	.78	1.08	98	1.5	10	-22/-30
	2	120	58	0.49	.89	1.53	99	1.5	10	-22/-30
F32T8	2	277	58	0.22	.89	1.53	97	1.5	15	-22/-30
	3	120	70	0.59	.76	1.09	99	1.5	10	-22/-30
	3	277	69	0.26	.76	1.10	98	1.5	10	-22/-30
	2	120	54	0.45	.87	1.61	99	1.5	10	-22/-30
F32T8/WM	2	277	54	0.20	.87	1.61	97	1.5	15	-22/-30
	3	120	64	0.54	.75	1.17	99	1.5	10	-22/-30
	3	277	64	0.24	.75	1.17	97	1.5	10	-22/-30
	2	120	49	0.41	.84	1.71	99	1.5	10	-22/-30
F28T8	2	277	49	0.19	.84	1.71	96	1.5	15	-22/-30
	3	120	61	0.51	.77	1.26	99	1.5	10	-22/-30
	3	277	60	0.22	.77	1.28	97	1.5	15	-22/-30
	2	120	46	0.39	.84	1.83	99	1.5	10	-22/-30
F32T8/25W	2	277	46	0.18	.84	1.83	95	1.5	15	-22/-30
	3	120	61	0.51	.78	1.28	99	1.5	10	-22/-30
	3	277	60	0.22	.78	1.30	97	1.5	15	-22/-30
	2	120	46	0.39	.86	1.87	99	1.5	10	-22/-30
F25T8	2	277	46	0.18	.86	1.87	95	1.5	15	-22/-30
	3	120	42	0.36	.78	1.86	99	1.5	10	-22/-30
	3	277	42	0.17	.78	1.86	95	1.5	15	-22/-30
	2	120	32	0.28	.88	2.75	99	1.5	15	-22/-30
F17T8	2	277	33	0.14	.88	2.67	93	1.5	15	-22/-30
	3	120	33	0.29	.70	2.12	99	1.5	15	-22/-30
	3	277	33	0.14	.70	2.12	93	1.5	15	-22/-30
	2	120	26	0.23	.77	2.96	99	1.5	15	-22/-30
FE15T8	2	277	26	0.12	.77	2.96	90	1.5	15	-22/-30
	3	120	61	0.52	.70	1.15	99	1.5	10	0/-18
	3	277	61	0.23	.70	1.15	97	1.5	10	0/-18
	2	120	47	0.40	.80	1.70	99	1.5	10	0/-18
F25T12	2	277	47	0.18	.80	1.70	96	1.5	15	0/-18

Safety and performance

UL Class P · UL Type 1 Outdoor · UL Type CC · UL Type HL · FCC – CLASS A Non-Consumer

Product is compliant with material restriction requirements of RoHS

See page E-1 for warranty information.

UltraMax® Professional Series
Instant Start Multi-Voltage 120–277V High-Efficiency
T8 Instant Start Ballasts For F17 (2 ft), F25 (3 ft), F32 (4 ft), F40 (5 ft) Lamps

78623 – GE332MAXP-N/ULTRA

UltraMax® P-Series Instant Start
Multi-Voltage High-Efficiency

3 or 2 – F32T8 120 to 277 "N" .87 BF UltraMax®P

- Energy-saving high-efficiency instant-start electronic ballast (>90%)
- Multi-voltage technology handles voltage from 120 to 277V
- UL Type CC Rating provides protection against arcing in electrical devices
- Anti-striation control for better light quality
- UL 55°C Ambient Temperature rating
- Cold temperature -22°F Minimum Starting Temperature

General characteristics

Ballast Type	Electronic – High-Efficiency Multivolt Instant Start
Starting Method	Instant start
Lamp Wiring	Parallel
Line Voltage Regulation (+/-)	10%
Ambient Temperature (MAX)	55°C (131°F)
Case Temperature (MAX)	70°C (158°F)
Ballast Factor	Normal
Sound Rating	A (20-24 decibels)
Power Factor Correction	Active
Sound Rating	A (20-24 decibels)
Additional Info	Anti-striation control, Auto-restart, Inherently Thermally Protected, UL Class P

Electrical characteristics

Supply Current Frequency	50 Hz/60 Hz

Order information

10 Pack	Pallet Pack	DIY Pack	IP Pack
78623		71722	

Dimensions

Wiring diagram – LFL 1C – see example on Page 10-61	
Case dimensions – Ref Drawing -A – see Page 10-62	
Length (L)	9.5 in (241 mm)
Width (W)	1.3 in (33 mm)
Height (H)	1.0 in (25.4 mm)
Mounting dimensions	
Mount Length (M)	8.9 in (226 mm)
Mount Width (X or F)	0.87 in (22 mm)
Mount Slots (MS)	0.3 in (8 mm)
Weight	0.8lbs
Exit Type	Side
Remote Mounting Distance to Lamp (F32T8)	18 ft
Remote Mounting Wire Gauge	18 AWG
Lead lengths	
Black	25 in (635 mm)
White	25 in (635 mm)
Blue	31 in (787 mm)
Red	37 in (940 mm)

Specifications by lamp and wattage

Lamp	# of Lamps	Line Volts (V)	System Watts (W)	Nom. Line Current (A)	System Ballast Factor	Ballast Efficacy Factor	Power Factor% (>=)	Crest Factor (<=)	THD% (<=)	Min. Starting Temp (°F/°C)
	3	120	82	0.70	.88	1.07	99	1.5	10	-22/-30
	3	277	81	0.30	.88	1.09	98	1.5	10	-22/-30
	2	120	64	0.54	.97	1.52	99	1.5	10	-22/-30
F32T8	2	277	63	0.24	.97	1.54	97	1.5	10	-22/-30
	3	120	77	0.65	.86	1.12	99	1.5	10	-22/-30
	3	277	76	0.28	.86	1.13	98	1.5	10	-22/-30
	2	120	59	0.50	.98	1.66	99	1.5	10	-22/-30
F32T8/WM	2	277	58	0.22	.98	1.69	97	1.5	15	-22/-30
	3	120	70	0.60	.84	1.20	99	1.5	10	-22/-30
	3	277	70	0.26	.84	1.20	98	1.5	10	-22/-30
	2	120	54	0.45	.94	1.74	99	1.5	10	-22/-30
F28T8	2	277	53	0.20	.94	1.77	97	1.5	15	-22/-30
	3	120	67	0.57	.87	1.30	99	1.5	10	-22/-30
	3	277	66	0.25	.87	1.32	98	1.5	10	-22/-30
	2	120	51	0.43	.93	1.82	99	1.5	10	-22/-30
F32T8/25W	2	277	51	0.19	.93	1.82	97	1.5	15	-22/-30
	3	120	67	0.57	.85	1.27	99	1.5	10	-22/-30
	3	277	67	0.25	.85	1.27	98	1.5	10	-22/-30
	2	120	51	0.43	.97	1.90	99	1.5	10	-22/-30
F25T8	2	277	51	0.19	.97	1.90	97	1.5	15	-22/-30
	3	120	45	0.40	.86	1.91	99	1.5	10	-22/-30
	3	277	45	0.18	.86	1.91	97	1.5	15	-22/-30
	2	120	35	0.30	.99	2.83	99	1.5	10	-22/-30
F17T8	2	277	36	0.14	.99	2.75	95	1.5	15	-22/-30
	3	120	36	0.31	.77	2.14	99	1.5	10	-22/-30
	3	277	36	0.15	.77	2.14	96	1.5	15	-22/-30
	2	120	28	0.25	.86	3.07	99	1.5	15	-22/-30
FE15T8	2	277	28	0.12	.86	3.07	93	1.5	20	-22/-30
	3	120	68	0.58	.78	1.15	99	1.5	10	0/-18
	3	277	67	0.25	.78	1.16	97	1.5	10	0/-18
	2	120	52	0.45	.89	1.71	99	1.5	10	0/-18
F25T12	2	277	52	0.20	.89	1.71	96	1.5	15	0/-18

Safety and performance

UL Class P · UL Type 1 Outdoor · UL Type CC · UL Type HL · FCC – CLASS A Non-Consumer

Product is compliant with material restriction requirements of RoHS

See page E-1 for warranty information.

UltraMax® Professional Series
Instant Start Multi-Voltage 120–277V High-Efficiency
T8 Instant Start Ballasts For F17 (2 ft), F25 (3 ft), F32 (4 ft), F40 (5 ft) Lamps

71422 – GE332MAXP-N+

UltraMax® P-Series Instant Start
Multi-Voltage High-Efficiency
3 or 2 – F32T8 120 to 277 "N+" 1.0 BF UltraMax®P

- Energy-saving high-efficiency instant-start electronic ballast (>90%)
- Multi-voltage technology handles voltage from 120 to 277V
- UL Type CC Rating provides protection against arcing in electrical devices
- Anti-striation control for better light quality
- UL 55°C Ambient Temperature rating
- Cold temperature -22°F Minimum Starting Temperature

General characteristics

Ballast Type	Electronic – High-Efficiency Multivolt Instant Start
Starting Method	Instant start
Lamp Wiring	Parallel
Line Voltage Regulation(+/-)	10%
Ambient Temperature (MAX)	55°C (131°F)
Case Temperature (MAX)	70°C (158°F)
Ballast Factor	Normal-High
Power Factor Correction	Active
Sound Rating	A (20-24 decibels)
Enclosure Type	Metal
Additional Info	Anti-striation control, Auto-restart, Inherently Thermally Protected, UL Class P

Electrical characteristics

Supply Current Frequency	50 Hz/60 Hz

Order information

10 Pack	Pallet Pack	DIY Pack	IP Pack
71422			

Dimensions

Wiring diagram – LFL 1C – see example on Page 10-61	
Case dimensions – Ref Drawing -A – see Page 10-62	
Length (L)	9.5 in (241 mm)
Width (W)	1.3 in (33 mm)
Height (H)	1.0 in (25.4 mm)
Mounting dimensions	
Mount Length (M)	8.9 in (226 mm)
Mount Width (X or F)	0.87 in (22 mm)
Mount Slots (MS)	0.3 in (8 mm)
Weight	0.8lbs
Exit Type	Side
Remote Mounting Distance to Lamp (F32T8)	18 ft
Remote Mounting Wire Gauge	18 AWG
Lead lengths	
Black	25 in (635 mm)
White	25 in (635 mm)
Blue	31 in (787 mm)
Red	37 in (940 mm)

Specifications by lamp and wattage

Lamp	# of Lamps	Line Volts (V)	System Watts (W)	Nom. Line Current (A)	System Ballast Factor	Ballast Efficacy Factor	Power Factor% (>=)	Crest Factor (<=)	THD% (<=)	Min. Starting Temp (°F/°C)
	3	120	93	0.78	1.01	1.09	99	1.5	10	-22/-30
	3	277	92	0.33	1.01	1.10	98	1.5	10	-22/-30
	2	120	73	0.61	1.13	1.55	99	1.5	10	-22/-30
F32T8	2	277	73	0.26	1.13	1.55	97	1.5	10	-22/-30
	3	120	87	0.73	1.00	1.15	99	1.5	10	-22/-30
	3	277	85	0.32	1.00	1.18	98	1.5	10	-22/-30
	2	120	62	0.52	1.10	1.77	99	1.5	10	-22/-30
F32T8/WM	2	277	61	0.23	1.10	1.80	97	1.5	10	-22/-30
	3	120	83	0.69	1.00	1.20	99	1.5	10	-22/-30
	3	277	82	0.30	1.00	1.22	98	1.5	10	-22/-30
	2	120	61	0.50	1.08	1.77	99	1.5	10	-22/-30
F28T8	2	277	60	0.22	1.08	1.80	97	1.5	10	-22/-30
	3	120	77	0.64	1.01	1.31	99	1.5	10	-22/-30
	3	277	76	0.27	1.01	1.33	98	1.5	10	-22/-30
	2	120	59	0.49	1.01	1.71	99	1.5	10	-22/-30
F32T8/25W	2	277	58	0.21	1.01	1.74	96	1.5	10	-22/-30
	3	120	77	0.64	1.01	1.31	99	1.5	10	-22/-30
	3	277	76	0.27	1.01	1.33	98	1.5	10	-22/-30
	2	120	59	0.49	1.14	1.93	99	1.5	10	-22/-30
F25T8	2	277	58	0.21	1.14	1.97	96	1.5	10	-22/-30
	3	120	54	0.46	1.03	1.91	99	1.5	10	-22/-30
	3	277	54	0.20	1.03	1.91	96	1.5	15	-22/-30
	2	120	42	0.35	1.03	2.45	99	1.5	10	-22/-30
F17T8	2	277	42	0.16	1.03	2.45	94	1.5	15	-22/-30
	3	120	44	0.37	1.00	2.27	99	1.5	10	-22/-30
	3	277	44	0.17	1.00	2.27	95	1.5	15	-22/-30
	2	120	34	0.30	1.00	2.94	99	1.5	15	-22/-30
FE15T8	2	277	35	0.14	1.00	2.86	92	1.5	15	-22/-30
	3	120	80	0.67	.93	1.16	99	1.5	10	0/-18
	3	277	79	0.29	.93	1.18	98	1.5	10	0/-18
	2	120	60	0.51	.93	1.55	99	1.5	10	0/-18
F25T12	2	277	60	0.22	.93	1.55	97	1.5	10	0/-18

Safety and performance

UL LISTED · UL Class P · UL Type 1 Outdoor · UL Type CC · UL Type HL · FCC – CLASS A Non-Consumer

NEMA Premium · Product is compliant with material restriction requirements of RoHS

See page E-1 for warranty information.

UltraMax® Professional Series
Instant Start Multi-Voltage 120–277V High-Efficiency
T8 Instant Start Ballasts For F17 (2 ft), F25 (3 ft), F32 (4 ft), F40 (5 ft) Lamps

71723 – GE432MAXP-H/ULTRA

UltraMax® P-Series Instant Start
Multi-Voltage High-Efficiency
4 or 3 – F32T8 120 to 277 "H" 1.18 BF UltraMax®P

- Energy-saving high-efficiency instant-start electronic ballast (>90%)
- Multi-voltage technology handles voltage from 120 to 277V
- UL Type CC Rating provides protection against arcing in electrical devices
- Anti-striation control for better light quality
- UL 55°C Ambient Temperature rating
- Cold temperature -22°F Minimum Starting Temperature

General characteristics

Ballast Type	Electronic – High-Efficiency Multivolt Instant Start
Starting Method	Instant start
Lamp Wiring	Parallel
Line Voltage Regulation(+/-)	10%
Ambient Temperature (MAX)	55°C (131°F)
Case Temperature (MAX)	90°C (194°F)
Ballast Factor	High
Power Factor Correction	Active
Sound Rating	A (20-24 decibels)
Enclosure Type	Metal
Additional Info	Anti-striation control, Auto-restart, Inherently Thermally Protected, UL Class P

Electrical characteristics

Supply Current Frequency	50 Hz/60 Hz

Order information

10 Pack	Pallet Pack	DIY Pack	IP Pack
71723	71724		

Dimensions

Wiring diagram – LFL 1D – see example on Page 10-61	
Case dimensions – Ref Drawing -A – see Page 10-62	
Length (L)	9.5 in (241 mm)
Width (W)	1.7 in (43 mm)
Height (H)	1.18 in (30 mm)
Mounting dimensions	
Mount Length (M)	8.9 in (226 mm)
Mount Width (X or F)	1.05 in (27 mm)
Mount Slots (MS)	0.3 in (8 mm)
Weight	1.4lbs
Exit Type	Side
Remote Mounting Distance to Lamp (F32T8)	18 ft
Remote Mounting Wire Gauge	18 AWG
Lead lengths	
Black	25 in (635 mm)
White	25 in (635 mm)
Red & Blue	31 in (787 mm)
Yellow	39 in (991 mm)

Specifications by lamp and wattage

Lamp	# of Lamps	Line Volts (V)	System Watts (W)	Nom. Line Current (A)	System Ballast Factor	Ballast Efficacy Factor	Power Factor% (>=)	Crest Factor (<=)	THD% (<=)	Min. Starting Temp (°F/°C)
	4	120	148	1.30	1.18	.80	99	1.4	10	-22/-30
	4	277	146	0.55	1.18	.81	98	1.4	10	-22/-30
	3	120	119	1.07	1.28	1.08	99	1.4	10	-22/-30
F32T8	3	277	117	0.46	1.28	1.09	97	1.4	15	-22/-30
	4	120	139	1.21	1.18	.85	99	1.4	10	50/10
	4	277	136	0.51	1.18	.87	97	1.4	10	50/10
	3	120	113	0.99	1.25	1.11	99	1.4	10	50/10
F32T8/WM	3	277	112	0.41	1.25	1.12	97	1.4	16	50/10
	4	120	127	1.10	1.18	.93	99	1.4	10	50/10
	4	277	125	0.48	1.18	.94	98	1.4	10	50/10
	3	120	105	0.91	1.24	1.18	99	1.4	10	50/10
F28T8	3	277	102	0.40	1.24	1.22	97	1.4	16	50/10
	4	120	120	1.06	1.18	.98	99	1.4	10	60/16
	4	277	116	0.45	1.18	1.02	98	1.4	10	60/16
	3	120	99	0.88	1.24	1.25	99	1.4	10	60/16
F32T8/25W	3	277	95	0.38	1.24	1.31	97	1.4	10	60/16
	4	120	119	0.45	1.16	.97	97	1.4	10	-22/-30
	4	277	121	1.06	1.16	.96	99	1.4	10	-22/-30
	3	120	101	0.87	1.27	1.26	99	1.4	10	-22/-30
F25T8	3	277	100	0.38	1.27	1.27	96	1.4	17	-22/-30
	4	120	79	0.62	1.16	1.47	99	1.4	10	-22/-30
	4	277	78	0.31	1.16	1.49	96	1.4	10	-22/-30
	3	120	62	0.57	1.25	2.02	99	1.4	10	-22/-30
F17T8	3	277	62	0.27	1.25	2.02	95	1.4	21	-22/-30
	4	120	62	0.54	1.03	1.66	99	1.4	10	0/-18
	4	277	62	0.26	1.03	1.66	95	1.4	20	0/-18
	3	120	51	0.45	1.12	2.20	99	1.4	10	0/-18
FE15T8	3	277	52	0.22	1.12	2.15	92	1.4	20	0/-18
	3	120	146	1.27	1.22	.84	99	1.4	10	-22/-30
F40T8	3	277	142	0.54	1.22	.86	97	1.4	14	-22/-30
	4	120	125	1.10	1.11	.89	99	1.4	10	0/-18
	4	277	122	0.47	1.11	.91	97	1.4	14	0/-18
	3	120	101	0.90	1.22	1.21	99	1.4	10	0/-18
F25T12	3	277	100	0.39	1.22	1.22	97	1.4	17	0/-18

Safety and performance

UL Class P UL Type 1 Outdoor UL Type CC UL Type HL FCC – CLASS A Non-Consumer

Product is compliant with material restriction requirements of RoHS

See page E-1 for warranty information.

UltraMax® Professional Series
Instant Start Multi-Voltage 120–277V High-Efficiency
T8 Instant Start Ballasts For F17 (2 ft), F25 (3 ft), F32 (4 ft), F40 (5 ft) Lamps

78625 – GE432MAXP-L/ULTRA

UltraMax® P-Series Instant Start
Multi-Voltage High-Efficiency
4 or 3 – F32T8 120 to 277 "L" .77 BF UltraMax®P

- Energy-saving high-efficiency instant-start electronic ballast (>90%)
- Multi-voltage technology handles voltage from 120 to 277V
- UL Type CC Rating provides protection against arcing in electrical devices
- Anti-striation control for better light quality
- UL 55°C Ambient Temperature rating
- Cold temperature -22°F Minimum Starting Temperature

General characteristics

Ballast Type	Electronic – High-Efficiency Multivolt Instant Start
Starting Method	Instant start
Lamp Wiring	Parallel
Line Voltage Regulation(+/-)	10%
Ambient Temperature (MAX)	55°C (131°F)
Case Temperature (MAX)	70°C (158°F)
Ballast Factor	Low
Power Factor Correction	Active
Sound Rating	A (20-24 decibels)
Enclosure Type	Metal
Additional Info	Anti-striation control, Auto-restart, Inherently Thermally Protected, UL Class P

Electrical characteristics

Supply Current Frequency	50 Hz/60 Hz

Order information

10 Pack	Pallet Pack	DIY Pack	IP Pack
78625			

Dimensions

Wiring diagram – LFL 1D – see example on Page 10-61	
Case dimensions – Ref Drawing -A – see Page 10-62	
Length (L)	9.5 in (241 mm)
Width (W)	1.3 in (33 mm)
Height (H)	1.0 in (25.4 mm)
Mounting dimensions	
Mount Length (M)	8.9 in (226 mm)
Mount Width (X or F)	0.87 in (22 mm)
Mount Slots (MS)	0.3 in (8 mm)
Weight	0.9lbs
Exit Type	Side
Remote Mounting Distance to Lamp (F32T8)	18 ft
Remote Mounting Wire Gauge	18 AWG
Lead lengths	
Black	25 in (635 mm)
White	25 in (635 mm)
Red & Blue	31 in (787 mm)
Yellow	39 in (991 mm)

Specifications by lamp and wattage

Lamp	# of Lamps	Line Volts (V)	System Watts (W)	Nom. Line Current (A)	System Ballast Factor	Ballast Efficacy Factor	Power Factor% (>=)	Crest Factor (<=)	THD% (<=)	Min. Starting Temp (°F/°C)
	4	120	98	0.82	.78	.80	99	1.5	10	-22/-30
	4	277	96	0.35	.78	.81	98	1.5	10	-22/-30
	3	120	84	0.72	.88	1.05	99	1.5	10	-22/-30
F32T8	3	277	83	0.31	.88	1.06	98	1.5	10	-22/-30
	4	120	92	0.79	.76	.83	99	1.5	10	-22/-30
	4	277	91	0.34	.76	.84	98	1.5	10	-22/-30
	3	120	77	0.66	.83	1.08	99	1.5	10	-22/-30
F32T8/WM	3	277	76	0.28	.83	1.09	97	1.5	10	-22/-30
	4	120	85	0.72	.75	.88	99	1.5	10	-22/-30
	4	277	84	0.31	.75	.89	98	1.5	10	-22/-30
	3	120	68	0.59	.81	1.19	99	1.5	10	-22/-30
F28T8	3	277	67	0.26	.81	1.21	97	1.5	10	-22/-30
	4	120	78	0.66	.77	.99	99	1.5	10	-22/-30
	4	277	77	0.29	.77	1.00	98	1.5	10	-22/-30
	3	120	62	0.52	.81	1.31	99	1.5	10	-22/-30
F32T8/25W	3	277	61	0.22	.81	1.33	97	1.5	10	-22/-30
	4	120	80	0.67	.76	.95	99	1.5	10	-22/-30
	4	277	79	0.29	.76	.96	98	1.5	10	-22/-30
	3	120	66	0.55	.84	1.27	99	1.5	10	-22/-30
F25T8	3	277	65	0.25	.84	1.29	97	1.5	10	-22/-30
	4	120	56	0.47	.79	1.41	99	1.5	10	-22/-30
	4	277	56	0.21	.79	1.41	96	1.5	10	-22/-30
	3	120	47	0.40	.86	1.83	99	1.5	10	-22/-30
F17T8	3	277	47	0.18	.86	1.83	95	1.5	15	-22/-30
	4	120	44	0.38	.76	1.73	99	1.5	10	-22/-30
	4	277	44	0.18	.76	1.73	95	1.5	10	-22/-30
	3	120	36	0.32	.76	2.11	99	1.5	10	-22/-30
FE15T8	3	277	37	0.15	.76	2.05	93	1.5	15	-22/-30
	4	120	81	0.69	.76	.94	99	1.5	10	0/-18
	4	277	81	0.30	.76	.94	98	1.5	10	0/-18
	3	120	68	0.58	.76	1.12	99	1.5	10	0/-18
F25T12	3	277	67	0.25	.76	1.13	97	1.5	10	0/-18

Safety and performance

UL Class P · UL Type 1 Outdoor · UL Type CC · UL Type HL · FCC – CLASS A Non-Consumer

Product is compliant with material restriction requirements of RoHS

See page E-1 for warranty information.

UltraMax® Professional Series
Instant Start Multi-Voltage 120–277V High-Efficiency
T8 Instant Start Ballasts For F17 (2 ft), F25 (3 ft), F32 (4 ft), F40 (5 ft) Lamps

78627 – GE432MAXP-N/ULTRA

UltraMax® P-Series Instant Start
Multi-Voltage High-Efficiency
4 or 3 – F32T8 120 to 277 "N" .87 BF UltraMax P

- Energy-saving high-efficiency instant-start electronic ballast (>90%)
- Multi-voltage technology handles voltage from 120 to 277V
- UL Type CC Rating provides protection against arcing in electrical devices
- Anti-striation control for better light quality
- UL 55°C Ambient Temperature rating
- Cold temperature -22°F Minimum Starting Temperature

General characteristics

Ballast Type	Electronic – High-Efficiency Multivolt Instant Start
Starting Method	Instant start
Lamp Wiring	Parallel
Line Voltage Regulation(+/-)	10%
Ambient Temperature (MAX)	55°C (131°F)
Case Temperature (MAX)	70°C (158°F)
Ballast Factor	Normal
Power Factor Correction	Active
Sound Rating	A (20-24 decibels)
Enclosure Type	Metal
Additional Info	Anti-striation control, Auto-restart, Inherently Thermally Protected, UL Class P

Electrical characteristics

Supply Current Frequency	50 Hz/60 Hz

Order information

10 Pack	Pallet Pack	DIY Pack	IP Pack
78627		71730	

Dimensions

Wiring diagram – LFL 1D – see example on Page 10-61	
Case dimensions – Ref Drawing -A – see Page 10-62	
Length (L)	9.5 in (241 mm)
Width (W)	1.3 in (33 mm)
Height (H)	1.0 in (25.4 mm)
Mounting dimensions	
Mount Length (M)	8.9 in (226 mm)
Mount Width (X or F)	0.87 in (22 mm)
Mount Slots (MS)	0.3 in (8 mm)
Weight	0.9lbs
Exit Type	Side
Remote Mounting Distance to Lamp (F32T8)	18 ft
Remote Mounting Wire Gauge	18 AWG
Lead lengths	
Black	25 in (635 mm)
White	25 in (635 mm)
Red & Blue	31 in (787 mm)
Yellow	39 in (991 mm)

Specifications by lamp and wattage

Lamp	# of Lamps	Line Volts (V)	System Watts (W)	Nom. Line Current (A)	System Ballast Factor	Ballast Efficacy Factor	Power Factor% (>=)	Crest Factor (<=)	THD% (<=)	Min. Starting Temp (°F/°C)
	4	120	110	0.93	.88	.80	99	1.5	10	-22/-30
	4	277	108	0.4	.88	.81	98	1.5	10	-22/-30
	3	120	92	0.78	.96	1.04	99	1.5	10	-22/-30
F32T8	3	277	91	0.34	.96	1.05	98	1.5	10	-22/-30
	4	120	103	0.87	.88	.85	99	1.5	10	-22/-30
	4	277	101	0.37	.88	.87	98	1.5	10	-22/-30
	3	120	85	0.73	.97	1.14	99	1.5	10	-22/-30
F32T8/WM	3	277	84	0.31	.97	1.15	98	1.5	10	-22/-30
	4	120	94	0.80	.84	.89	99	1.5	10	-22/-30
	4	277	92	0.34	.84	.91	98	1.5	10	-22/-30
	3	120	77	0.66	.93	1.21	99	1.5	10	-22/-30
F28T8	3	277	76	0.29	.93	1.22	98	1.5	10	-22/-30
	4	120	87	0.73	.87	1.00	99	1.5	10	-22/-30
	4	277	87	0.32	.87	1.00	98	1.5	10	-22/-30
	3	120	72	0.60	.89	1.24	99	1.5	10	-22/-30
F32T8/25W	3	277	71	0.26	.89	1.25	97	1.5	10	-22/-30
	4	120	89	0.74	.86	.97	99	1.5	10	-22/-30
	4	277	88	0.32	.86	.98	98	1.5	10	-22/-30
	3	120	74	0.62	.97	1.31	99	1.5	10	-22/-30
F25T8	3	277	73	0.27	97	1.33	97	1.5	10	-22/-30
	4	120	61	0.53	.89	1.46	99	1.5	10	-22/-30
	4	277	61	0.23	.89	1.46	97	1.5	10	-22/-30
	3	120	51	0.44	.99	1.94	99	1.5	10	-22/-30
F17T8	3	277	51	0.20	.99	1.94	96	1.5	10	-22/-30
	4	120	48	0.42	.77	1.60	99	1.5	10	-22/-30
	4	277	48	0.19	.77	1.60	96	1.5	10	-22/-30
	3	120	41	0.35	.85	2.07	99	1.5	10	-22/-30
FE15T8	3	277	40	0.17	.85	2.13	94	1.5	10	-22/-30
	4	120	91	0.78	.79	.87	99	1.5	10	0/-18
	4	277	90	0.33	.79	.88	98	1.5	10	0/-18
	3	120	76	0.65	.87	1.14	99	1.5	10	0/-18
F25T12	3	277	75	0.28	.87	1.16	98	1.5	10	0/-18

Safety and performance

UL Class P UL Type 1 Outdoor UL Type CC UL Type HL FCC – CLASS A Non-Consumer

Product is compliant with material restriction requirements of RoHS

See page E-1 for warranty information.

UltraMax® Professional Series
Instant Start Multi-Voltage 120–277V High-Efficiency
T8 Instant Start Ballasts For F17 (2 ft), F25 (3 ft), F32 (4 ft), F40 (5 ft) Lamps

71423 – GE432MAXP-N+

UltraMax® P-Series Instant Start
Multi-Voltage High-Efficiency
4 or 3 – F32T8 120 to 277 "N+" 1.0 BF UltraMax®P

- Energy-saving high-efficiency instant-start electronic ballast (>90%)
- Multi-voltage technology handles voltage from 120 to 277V
- UL Type CC Rating provides protection against arcing in electrical devices
- Anti-striation control for better light quality
- Cold temperature -22°F Minimum Starting Temperature

General characteristics

Ballast Type	Electronic – High-Efficiency Multivolt Instant Start
Starting Method	Instant start
Lamp Wiring	Parallel
Line Voltage Regulation(+/-)	10%
Ambient Temperature (MAX)	40°C (104°F)
Case Temperature (MAX)	70°C (158°F)
Ballast Factor	Normal-High
Power Factor Correction	Active
Sound Rating	A (20-24 decibels)
Enclosure Type	Metal
Additional Info	Anti-striation control, Auto-restart, Inherently Thermally Protected, UL Class P

Electrical characteristics

Supply Current Frequency	50 Hz/60 Hz

Order information

10 Pack	Pallet Pack	DIY Pack	IP Pack
71423			

Dimensions

Wiring diagram – LFL 1D – see example on Page 10-61	
Case dimensions – Ref Drawing -A – see Page 10-62	
Length (L)	9.5 in (241 mm)
Width (W)	2.4 in (61 mm)
Height (H)	1.6 in (40 mm)
Mounting dimensions	
Mount Length (M)	8.9 in (226 mm)
Mount Width (X or F)	1.7 in (43 mm)
Mount Slots (MS)	0.3 in (8 mm)
Weight	2.16lbs
Exit Type	Side
Remote Mounting Distance to Lamp (F32T8)	12 ft
Remote Mounting Wire Gauge	18 AWG
Lead lengths	
Black	25 in (635 mm)
White	25 in (635 mm)
Red & Blue	31 in (787 mm)
Yellow	47 in (1194 mm)

Specifications by lamp and wattage

Lamp	# of Lamps	Line Volts (V)	System Watts (W)	Nom. Line Current (A)	System Ballast Factor	Ballast Efficacy Factor	Power Factor% (>=)	Crest Factor (<=)	THD% (<=)	Min. Starting Temp (°F/°C)
	4	120	124	1.03	1.00	.81	99	1.5	10	-22/-30
	4	277	121	0.45	1.00	.83	98	1.5	10	-22/-30
	3	120	97	0.81	0.97	1.00	99	1.5	10	-22/-30
F32T8	3	277	113	0.45	1.15	1.02	97	1.5	10	-22/-30
	4	120	119	1	1.00	.84	99	1.5	10	60/16
	4	277	117	0.44	1.00	.86	98	1.5	10	60/16
	3	120	92	0.77	.99	1.08	99	1.5	10	60/16
F32T8/WM	3	277	92	0.35	.99	1.08	97	1.5	10	60/16
	4	120	114	0.95	1.00	.88	99	1.5	10	60/16
	4	277	96	0.36	1.00	1.04	97	1.5	10	60/16
	3	120	89	0.74	.99	1.12	99	1.5	10	60/16
F28T8	3	277	88	0.33	.99	1.13	96	1.5	10	60/16
	4	120	110	0.92	.96	.87	99	1.5	10	0/-18
	4	277	108	0.14	.96	.89	97	1.5	10	0/-18
	3	120	86	0.72	.97	1.13	99	1.5	10	0/-18
F25T12	3	277	86	0.32	.97	1.13	96	1.5	10	0/-18

Safety and performance

UL Class P · UL Type 1 Outdoor · UL Type CC · UL Type HL · FCC – CLASS A Non-Consumer

Product is compliant with material restriction requirements of RoHS

See page E-1 for warranty information.

UltraMax® Professional Series
Instant Start Multi-Voltage 120–277V High-Efficiency
T8 Instant Start Ballasts For F17 (2 ft), F25 (3 ft), F32 (4 ft), F40 (5 ft) Lamps

74117 – GE632MAXP-H90

UltraMax® P-Series Instant Start
Multi-Voltage High-Efficiency
6 or 5 – F32T8 120 to 277 "H" 1.18 BF UltraMax®P

- Energy-saving high-efficiency instant-start electronic ballast (>95%)
- Multi-voltage technology handles voltage from 120 to 277V
- UL Type CC Rating provides protection against arcing in electrical devices
- Anti-striation control for better light quality
- UL 55°C Ambient Temperature rating
- High temperature 90°C max case
- Cold temperature -22°F Minimum Starting Temperature

General characteristics

Ballast Type	Electronic – High-Efficiency Multivolt Instant Start
Starting Method	Instant start
Lamp Wiring	Parallel
Line Voltage Regulation(+/-)	10%
Ambient Temperature (MAX)	55°C (131°F)
Case Temperature (MAX)	90°C (194°F)
Ballast Factor	High
Power Factor Correction	Active
Sound Rating	A (20-24 decibels)
Enclosure Type	Metal
Additional Info	Anti-striation control, Auto-restart, Inherently Thermally Protected, UL Class P

Electrical characteristics

Supply Current Frequency	50Hz/60Hz

Order information

10 Pack	Pallet Pack	DIY Pack	IP Pack
74117			

Dimensions

Wiring diagram – LFL 6H – see example on Page 10-61	
Case dimensions – Ref Drawing -A – see Page 10-62	
Length (L)	11.75 in (299 mm)
Width (W)	1.7 in (43 mm)
Height (H)	1.18 in (30 mm)
Mounting dimensions	
Mount Length (M)	11.1 in (283 mm)
Mount Width (X or F)	
Mount Slots (MS)	0.3 in (8 mm)
Weight	3.1lbs
Exit Type	Side
Remote Mounting Distance to Lamp (F32T8)	18 ft
Remote Mounting Wire Gauge	18 AWG
Lead lengths	
Black	25 in (635 mm)
White	25 in (635 mm)
Red & Blue	34 in (864 mm)
Yellow	36 in (914 mm)

Specifications by lamp and wattage

Lamp	# of Lamps	Line Volts (V)	System Watts (W)	Nom. Line Current (A)	System Ballast Factor	Ballast Efficacy Factor	Power Factor% (>=)	Crest Factor (<=)	THD% (<=)	Min. Starting Temp (°F/°C)
	6	120	221	1.94	1.18	.53	99	1.5	10	-20/-29
	6	277	215	0.82	1.18	.55	97	1.5	10	-20/-29
	5	120	197	1.73	1.25	.63	99	1.5	10	-20/-29
F32T8	5	277	192	0.73	1.25	.65	97	1.5	13	-20/-29
	6	120	205	1.8	1.18	.58	99	1.5	10	60/16
	6	277	200	0.76	1.18	.59	97	1.5	10	60/16
	5	120	182	1.6	1.23	.68	99	1.5	10	60/16
F32T8/WM	5	277	178	0.68	1.23	.69	96	1.5	16	60/16
	6	120	187	1.64	1.18	.63	99	1.5	10	60/16
	6	277	184	0.7	1.18	.64	96	1.5	13	60/16
	5	120	166	1.45	1.20	.72	99	1.5	10	60/16
F28T8	5	277	164	0.63	1.20	.73	96	1.5	16	60/16
	6	120	178	1.57	1.18	.66	99	1.5	10	-20/-29
	6	277	176	0.68	1.18	.67	96	1.5	16	-20/-29
	5	120	159	1.4	1.16	.73	99	1.5	10	-20/-29
F32T8/25W	5	277	157	0.61	1.16	.74	95	1.5	18	-20/-29
	6	120	122	1.08	1.17	.96	99	1.5	10	-20/-29
	6	277	121	0.5	1.17	.97	90	1.5	24	-20/-29
	5	120	107	0.95	1.24	1.16	99	1.5	10	-20/-29
F17T8	5	277	106	0.44	1.24	1.17	88	1.5	26	-20/-29
	5	120	231	2.03	1.18	.51	99	1.5	10	0/-18
F40T8	5	277	225	0.86	1.18	.52	97	1.5	10	0/-18

Safety and performance

UL Class P · UL Type 1 Outdoor · UL Type CC · UL Type HL · FCC – CLASS A Non-Consumer

Product is compliant with material restriction requirements of RoHS

See page E-1 for warranty information.

UltraMax® Professional Series
Instant Start Multi-Voltage 120–277V High-Efficiency
T8 Instant Start Ballasts For 46-59W 4ft-8ft Slimline Lamps

49767 – GE259MAXP-N/ULTRA

UltraMax® P-Series Instant Start
Multi-Voltage High-Efficiency
2 or 1 – F96T8 120 to 277 "N" 0.87 BF UltraMax®P

- Energy-saving high-efficiency instant-start electronic ballast (>90%)
- Multi-voltage technology handles voltage from 120 to 277V
- Anti-striation control for better light quality
- Cold temperature 0°F Minimum Starting Temperature

General characteristics

Ballast Type	Electronic – High-Efficiency Multivolt Instant Start
Starting Method	Instant start
Lamp Wiring	Parallel
Line Voltage Regulation(+/-)	10%
Ambient Temperature (MAX)	40°C (104°F)
Case Temperature (MAX)	70°C (158°F)
Ballast Factor	Normal
Power Factor Correction	Active
Sound Rating	A (20-24 decibels)
Enclosure Type	Metal
Additional Info	Anti-striation control, Auto-restart, Inherently Thermally Protected, UL Class P

Electrical characteristics

Supply Current Frequency	50 Hz/60 Hz

Order information

10 Pack	Pallet Pack	DIY Pack	IP Pack
49767		23954	

Dimensions

Wiring diagram – LFL 1B – see example on Page 10-61	
Case dimensions – Ref Drawing -A – see Page 10-62	
Length (L)	9.5 in (241 mm)
Width (W)	1.3 in (33 mm)
Height (H)	1.18 in (30 mm)
Mounting dimensions	
Mount Length (M)	8.9 in (226 mm)
Mount Width (X or F)	0.87 in (22 mm)
Mount Slots (MS)	0.3 in (8 mm)
Weight	1.4lbs
Exit Type	Side
Remote Mounting Distance to Lamp (F32T8)	18 ft
Remote Mounting Wire Gauge	18 AWG
Lead lengths	
Black	22 in (559 mm)
White	22 in (559 mm)
Blue	46 in (1168 mm)
Red	78 in (1981 mm)

Specifications by lamp and wattage

Lamp	# of Lamps	Line Volts (V)	System Watts (W)	Nom. Line Current (A)	System Ballast Factor	Ballast Efficacy Factor	Power Factor% (>=)	Crest Factor (<=)	THD% (<=)	Min. Starting Temp (°F/°C)
	2	120	107	0.91	.87	.81	99	1.7	10	0/-18
	2	277	105	0.4	.87	.83	98	1.7	15	0/-18
	1	120	62	0.53	.87	1.40	99	1.7	10	0/-18
F96T8	1	277	62	0.24	.87	1.40	97	1.7	20	0/-18
	2	120	102	0.87	.87	.85	99	1.7	10	50/10
	2	277	100	0.38	.87	.87	98	1.7	15	50/10
	1	120	59	0.5	.87	1.47	99	1.7	10	50/10
F96T8/WM	1	277	59	0.23	.87	1.47	97	1.7	20	50/10
	2	120	85	0.78	.89	1.05	99	1.7	10	50/10
	2	277	84	0.32	.89	1.06	98	1.7	15	50/10
	1	120	59	0.5	.87	1.47	99	1.7	10	50/10
F96T8/WMP	1	277	59	0.23	.87	1.47	97	1.7	20	50/10
	2	120	79	0.72	.89	1.13	99	1.7	10	0/-18
	2	277	78	0.29	.89	1.14	98	1.7	13	0/-18
	1	120	44	0.39	.87	1.98	99	1.7	10	0/-18
F72T8	1	277	44	0.17	.87	1.98	96	1.7	20	0/-18

Safety and performance

UL Class P UL Type 1 Outdoor UL Type HL FCC – CLASS A Non-Consumer

Product is compliant with material restriction requirements of RoHS

See page E-1 for warranty information.

UltraMax® Professional Series
Instant Start Multi-Voltage 120–277V High-Efficiency
T8 Instant Start Ballasts For 46-59W 4ft-8ft Slimline Lamps

73199 – GE259MAXP-L/ULTRA

UltraMax® P-Series Instant Start
Multi-Voltage High-Efficiency

2 or 1 – F96T8 120 to 277 "L" 0.77 BF UltraMax®P

- Energy-saving high-efficiency instant-start electronic ballast (>90%)
- Multi-voltage technology handles voltage from 120 to 277V
- Anti-striation control for better light quality
- Cold temperature 0°F Minimum Starting Temperature

General characteristics

Ballast Type	Electronic – High-Efficiency Multivolt Instant Start
Starting Method	Instant start
Lamp Wiring	Parallel
Line Voltage Regulation(+/-)	10%
Ambient Temperature (MAX)	40°C (104°F)
Case Temperature (MAX)	70°C (158°F)
Ballast Factor	Low
Power Factor Correction	Active
Sound Rating	A (20-24 decibels)
Enclosure Type	Metal
Additional Info	Anti-striation control, Auto-restart, Inherently Thermally Protected, UL Class P

Electrical characteristics

Supply Current Frequency	50Hz/60 Hz

Order information

10 Pack	Pallet Pack	DIY Pack	IP Pack
73199			

Dimensions

Wiring diagram – LFL 1B – see example on Page 10-61	
Case dimensions – Ref Drawing -A – see Page 10-62	
Length (L)	9.5 in (241 mm)
Width (W)	1.3 in (33 mm)
Height (H)	1.18 in (30 mm)
Mounting dimensions	
Mount Length (M)	8.9 in (226 mm)
Mount Width (X or F)	0.87 in (22 mm)
Mount Slots (MS)	0.3 in (8 mm)
Weight	1.4lbs
Exit Type	Side
Remote Mounting Distance to Lamp (F32T8)	18 ft
Remote Mounting Wire Gauge	18 AWG
Lead lengths	
Black	22 in (559 mm)
White	22 in (559 mm)
Blue	46 in (1168 mm)
Red	78 in (1981 mm)

Specifications by lamp and wattage

Lamp	# of Lamps	Line Volts (V)	System Watts (W)	Nom. Line Current (A)	System Ballast Factor	Ballast Efficacy Factor	Power Factor% (>=)	Crest Factor (<=)	THD% (<=)	Min. Starting Temp (°F/°C)
	2	120	95	0.81	.77	.81	99	1.7	10	0/-18
	2	277	94	0.35	.77	.82	99	1.7	15	0/-18
	1	120	59	0.5	.92	1.56	99	1.7	10	0/-18
F96T8	1	277	59	0.22	.92	1.56	97	1.7	20	0/-18
	2	120	93	0.79	.77	.83	99	1.7	10	60/16
	2	277	91	0.34	.77	.85	98	1.7	15	60/16
	1	120	58	0.48	.92	1.59	99	1.7	10	60/16
F96T8/WM	1	277	58	0.21	.92	1.59	97	1.7	20	60/16
	2	120	89	0.74	.77	.87	99	1.7	10	60/16
	2	277	87	0.32	.77	.89	98	1.7	15	60/16
	1	120	54	0.5	.92	1.70	99	1.7	10	60/16
F96T8/WMP	1	277	54	0.2	.92	1.70	96	1.7	20	60/16
	2	120	65	0.54	.79	1.22	99	1.7	10	0/-18
	2	277	64	0.24	.79	1.23	97	1.7	13	0/-18
	1	120	41	0.34	.94	2.29	99	1.7	10	0/-18
F72T8	1	277	41	0.16	.94	2.29	97	1.7	20	0/-18

Safety and performance

UL Class P · UL Type 1 Outdoor · UL Type HL · FCC – CLASS A Non-Consumer

Product is compliant with material restriction requirements of RoHS

See page E-1 for warranty information.

UltraMax® Professional Series MultiVolt High Output 120–277V
T8 Instant Start Ballasts For 44-86W 4ft-8ft HO Lamps

63888 – GE286MAXP-HO-N

UltraMax® P-Series Multivolt High Output 120V-277V

2 or 1 – F96T8HO IS 120 to 277 "N" 0.87 BF

- High-performance electronic ballast for all general fluorescent applications
- Instant start electronic ballast for long lamp starting cycles and low initial cost
- Multi-voltage technology handles voltage from 120 to 277V
- Parallel lamp operation means system maintenance is easier to manage
- Anti-striation control for better light quality
- Cold temperature -22°F Minimum Starting Temperature

General characteristics

Ballast Type	Electronic –Multivolt Instant Start
Starting Method	Instant start
Lamp Wiring	Parallel
Line Voltage Regulation(+/-)	10%
Ambient Temperature (MAX)	40°C (104°F)
Case Temperature (MAX)	70°C (158°F)
Ballast Factor	Normal
Power Factor Correction	Active
Sound Rating	A (20-24 decibels)
Enclosure Type	Metal
Additional Info	Auto-restart, Inherently Thermally Protected, UL Class P

Electrical characteristics

Supply Current Frequency	50 Hz/60 Hz

Order information

10 Pack	Pallet Pack	DIY Pack	IP Pack
63888			

Dimensions

Wiring diagram – LFL 1B – see example on Page 10-61	
Case dimensions – Ref Drawing -A – see Page 10-62	
Length (L)	9.5 in (241 mm)
Width (W)	1.7 in (43 mm)
Height (H)	1.18 in (30 mm)
Mounting dimensions	
Mount Length (M)	8.9 in (226 mm)
Mount Width (X or F)	1.05 in (27 mm)
Mount Slots (MS)	0.3 in (8 mm)
Weight	1.40lbs
Exit Type	Side
Remote Mounting Distance to Lamp (F32T8)	18 ft
Remote Mounting Wire Gauge	18 AWG
Lead lengths	
Black	22 in (559 mm)
White	22 in (559 mm)
Blue	46 in (1168 mm)
Red	78 in (1981 mm)

Specifications by lamp and wattage

Lamp	# of Lamps	Line Volts (V)	System Watts (W)	Nom. Line Current (A)	System Ballast Factor	Ballast Efficacy Factor	Power Factor% (>=)	Crest Factor (<=)	THD% (<=)	Min. Starting Temp (°F/°C)
	2	120	111	0.95	1.37	1.23	99	1.7	10	-22/-30
	2	277	110	0.41	1.37	1.25	97	1.7	10	-22/-30
	1	120	70	0.58	1.63	2.33	99	1.7	10	-22/-30
F96T849W	1	277	70	0.26	1.63	2.33	95	1.7	10	-22/-30
	2	120	124	1.10	1.37	1.10	99	1.7	10	-22/-30
	2	277	122	0.46	1.37	1.12	98	1.7	10	-22/-30
	1	120	77	0.68	1.63	2.11	99	1.7	10	-22/-30
F96T8WMP	1	277	77	0.30	1.63	2.11	96	1.7	10	-22/-30
	2	120	135	1.18	1.14	.85	99	1.7	10	-22/-30
	2	277	133	0.50	1.15	.86	98	1.7	10	-22/-30
	1	120	84	0.73	1.35	1.61	99	1.7	10	-22/-30
F96T8WM	1	277	84	0.32	1.35	1.61	96	1.7	10	-22/-30
	2	120	145	1.25	.78	.54	99	1.7	10	-22/-30
	2	277	142	0.54	.78	.55	98	1.7	10	-22/-30
	1	120	91	0.78	.91	1.01	99	1.7	10	-22/-30
F96T8HO	1	277	90	0.35	.92	1.02	97	1.7	10	-22/-30
	2	120	142	1.24	1.15	.81	99	1.7	10	-22/-30
	2	277	140	0.52	1.15	.82	98	1.7	10	-22/-30
	1	120	88	0.76	1.35	1.54	99	1.7	10	-22/-30
F96T8	1	277	87	0.34	1.36	1.56	97	1.7	10	-22/-30
	2	120	115	1.02	.82	.71	99	1.7	10	-22/-30
	2	277	114	0.43	.82	.72	97	1.7	16	-22/-30
	1	120	73	0.64	.95	1.30	99	1.7	10	-22/-30
F72T8HO	1	277	72	0.28	.95	1.31	95	1.7	22	-22/-30
	2	120	95	0.84	.81	.86	99	1.7	10	-22/-30
	2	277	92	0.35	.81	.88	97	1.7	18	-22/-30
	1	120	60	0.53	.95	1.58	99	1.7	11	-22/-30
F60T8HO	1	277	62	0.24	.95	1.53	94	1.7	23	-22/-30
	2	120	78	0.68	.79	1.01	99	1.7	10	-22/-30
	2	277	78	0.30	.79	1.01	96	1.7	10	-22/-30
	1	120	49	0.43	.93	1.91	99	1.7	10	-22/-30
F58T8	1	277	50	0.20	.93	1.87	93	1.7	10	-22/-30
	2	120	78	0.70	.82	1.05	99	1.7	10	-22/-30
	2	277	77	0.30	.82	1.06	96	1.7	21	-22/-30
	1	120	51	0.45	.95	1.87	99	1.7	13	-22/-30
F48T8HO	1	277	51	0.20	.95	1.87	93	1.7	26	-22/-30
	2	120	97	0.85	1.20	1.24	99	1.7	10	-22/-30
	2	277	96	0.37	1.20	1.25	97	1.7	10	-22/-30
	1	120	62	0.52	1.39	2.24	99	1.7	10	-22/-30
F40T8	1	277	62	0.24	1.37	2.21	95	1.7	10	-22/-30

Safety and performance

UL Class P UL Type 1 Outdoor UL Type HL FCC – CLASS A Non-Consumer Product is compliant with material restriction requirements of RoHS

See page E-1 for warranty information.

UltraMax® Professional Series 347V High-Efficiency
T8 Instant Start Ballasts

74093 – GE232MAXP347-N

UltraMax® P-Series 347V High-Efficiency

2 or 1 – F32T8 347V "N" 0.87 BF UltraMax®P

- Energy-saving high-efficiency instant-start electronic ballast (>90%)
- Instant start ballast for long lamp starting cycles and low initial cost
- Anti-striation control for better light quality
- Cold temperature -22°F Minimum Starting Temperature
- Parallel lamp operation means system maintenance is easier to manage

General characteristics

Ballast Type	Electronic – High-Efficiency Instant Start
Starting Method	Instant start
Lamp Wiring	Parallel
Line Voltage Regulation(+/-)	10%
Ambient Temperature (MAX)	40°C (104°F)
Case Temperature (MAX)	70°C (158°F)
Ballast Factor	Normal
Power Factor Correction	Active
Sound Rating	A (20-24 decibels)
Enclosure Type	Metal
Additional Info	Anti-striation control, Auto-restart, Inherently Thermally Protected, UL Class P

Electrical characteristics

Supply Current Frequency	60 Hz

Order information

10 Pack	Pallet Pack	DIY Pack	IP Pack
74093			

Dimensions

Wiring diagram – LFL 1B – see example on Page 10-61	
Case dimensions – Ref Drawing -A – see Page 10-62	
Length (L)	9.5 in (241 mm)
Width (W)	1.3 in (33 mm)
Height (H)	1.18 in (30 mm)
Mounting dimensions	
Mount Length (M)	8.9 in (226 mm)
Mount Width (X or F)	0.87 in (22 mm)
Mount Slots (MS)	0.3 in (8 mm)
Weight	1.04lbs
Exit Type	Side
Remote Mounting Distance to Lamp (F32T8)	18 ft
Remote Mounting Wire Gauge	18 AWG
Lead lengths	
Black	25 in (635 mm)
White	25 in (635 mm)
Blue	31 in (787 mm)
Red	45 in (1143 mm)

Specifications by lamp and wattage

Lamp	# of Lamps	Line Volts (V)	System Watts (W)	Nom. Line Current (A)	System Ballast Factor	Ballast Efficacy Factor	Power Factor% (>=)	Crest Factor (<=)	THD% (<=)	Min. Starting Temp (°F/°C)
	2	347	53	0.15	0.87	1.65	99	1.7	10	-22/-30
F32T8	1	347	34	0.10	1.02	3.03	97	1.7	10	-22/-30
	2	347	50	0.15	0.86	1.72	99	1.7	10	60/16
F32T8/WM	1	347	32	0.09	1.02	3.20	97	1.7	10	60/16
	2	347	46	0.14	0.84	1.81	99	1.7	10	60/16
F28T8	1	347	30	0.09	1.01	3.38	97	1.7	10	60/16
F32T8/25W	2	347	42	0.12	0.84	2.00	99	1.7	10	60/16
	2	347	41	0.12	0.88	2.12	98	1.7	10	-22/-30
F25T8	1	347	26	0.08	1.03	3.89	90	1.7	25	-22/-30
F25T8/WM	2	347	35	0.11	0.88	2.51	98	1.7	10	60/16
	2	347	30	0.09	0.83	2.78	96	1.7	10	-22/-30
F17T8	1	347	20	0.07	0.98	5.00	80	1.7	50	-22/-30
F17T8/WM	2	347	25	0.08	0.83	3.32	97	1.7	10	60/16
	2	347	24	0.08	0.76	3.19	88	1.7	32	-22/-30
FE15T8	1	347	16	0.06	0.88	5.52	77	1.7	69	-22/-30
	2	347	44	0.13	0.89	2.03	98	1.7	10	-22/-30
F25T12	1	347	29	0.09	1.08	3.76	96	1.7	10	-22/-30

Safety and performance

UL Class P UL Type 1 Outdoor UL Type HL ICES-005 for EMI and RFI FCC – CLASS A Non-Consumer

ANSI - C82.11 - Cons 2002, ANSI - C62.41 - 1991 Product is compliant with material restriction requirements of RoHS

See page E-1 for warranty information.

UltraMax® Professional Series 347V High-Efficiency
T8 Instant Start Ballasts

67435 – GE232MAXP347-N+

UltraMax® P-Series 347V High-Efficiency

2 or 1 – F32T8 347V "N+" 1.0 BF UltraMax®P

- Energy-saving high-efficiency instant-start electronic ballast (>90%)
- Instant start ballast for long lamp starting cycles and low initial cost
- Anti-striation control for better light quality
- Cold temperature -22°F Minimum Starting Temperature
- Parallel lamp operation means system maintenance is easier to manage

General characteristics

Ballast Type	Electronic – High-Efficiency Instant Start
Starting Method	Instant start
Lamp Wiring	Parallel
Line Voltage Regulation(+/-)	10%
Ambient Temperature (MAX)	40°C (104°F)
Case Temperature (MAX)	70°C (158°F)
Ballast Factor	Normal-High
Power Factor Correction	Active
Sound Rating	A (20-24 decibels)
Enclosure Type	Metal
Additional Info	Anti-striation control, Auto-restart, Inherently Thermally Protected, UL Class P

Electrical characteristics

Supply Current Frequency	60 Hz

Order information

10 Pack	Pallet Pack	DIY Pack	IP Pack
67435			

Dimensions

Wiring diagram – LFL 1B – see example on Page 10-61	
Case dimensions – Ref Drawing -A – see Page 10-62	
Length (L)	9.5 in (241 mm)
Width (W)	1.3 in (33 mm)
Height (H)	1.18 in (30 mm)
Mounting dimensions	
Mount Length (M)	8.9 in (226 mm)
Mount Width (X or F)	0.87 in (22 mm)
Mount Slots (MS)	0.3 in (8 mm)
Weight	1.04lbs
Exit Type	Side
Remote Mounting Distance to Lamp (F32T8)	18 ft
Remote Mounting Wire Gauge	18 AWG
Lead lengths	
Black	25 in (635 mm)
White	25 in (635 mm)
Blue	31 in (787 mm)
Red	45 in (1143 mm)

Specifications by lamp and wattage

Lamp	# of Lamps	Line Volts (V)	System Watts (W)	Nom. Line Current (A)	System Ballast Factor	Ballast Efficacy Factor	Power Factor% (>=)	Crest Factor (<=)	THD% (<=)	Min. Starting Temp (°F/°C)
F32T8	2	347	61	0.17	1.00	1.64	99	1.7	10	-22/-30
	1	347								
F32T8/WM	2	347	57	0.17	.96	1.68	99	1.7	10	60/16
	1	347								
F28T8	2	347	53	0.15	.94	1.77	99	1.7	10	60/16
	1	347								
F25T8	2	347	48	0.14	.99	2.06	98	1.7	10	-22/-30
	1	347								
F17T8	2	347	34	0.11	.94	2.76	91	1.7	29	-22/-30
	1	347								
FE15T8	2	347	25	0.08	.85	3.40	88	1.7	46	-22/-30
	1	347								
F25T12	2	347	50	0.15	1.01	2.02	98	1.7	10	-22/-30
	1	347								

Safety and performance

c UL us LISTED; UL Class P; UL Type 1 Outdoor; UL Type HL; ICES-005 for EMI and RFI; FCC – CLASS A Non-Consumer

NEMA Premium; ANSI - C82.11 - Cons 2002, ANSI - C62.41 - 1991; Product is compliant with material restriction requirements of RoHS

See page E-1 for warranty information.

UltraMax® Professional Series 347V High-Efficiency
T8 Instant Start Ballasts

74094 – GE332MAXP347-N

UltraMax® P-Series 347V High-Efficiency

3 or 2 – F32T8 347V "N" 0.87 BF UltraMax®P

- Energy-saving high-efficiency instant-start electronic ballast (>90%)
- Instant start ballast for long lamp starting cycles and low initial cost
- Anti-striation control for better light quality
- Cold temperature -22°F Minimum Starting Temperature
- Parallel lamp operation means system maintenance is easier to manage

General characteristics

Ballast Type	Electronic – High-Efficiency Instant Start
Starting Method	Instant start
Lamp Wiring	Parallel
Line Voltage Regulation(+/-)	10%
Ambient Temperature (MAX)	40°C (104°F)
Case Temperature (MAX)	70°C (158°F)
Ballast Factor	Normal
Power Factor Correction	Active
Sound Rating	A (20-24 decibels)
Enclosure Type	Metal
Additional Info	Anti-striation control, Auto-restart, Inherently Thermally Protected, UL Class P

Electrical characteristics

Supply Current Frequency	60 Hz

Order information

10 Pack	Pallet Pack	DIY Pack	IP Pack
74094			

Dimensions

Wiring diagram – LFL 1C – see example on Page 10-61	
Case dimensions – Ref Drawing -A – see Page 10-62	
Length (L)	9.5 in (241 mm)
Width (W)	1.3 in (33 mm)
Height (H)	1.18 in (30 mm)
Mounting dimensions	
Mount Length (M)	8.9 in (226 mm)
Mount Width (X or F)	0.87 in (22 mm)
Mount Slots (MS)	0.3 in (8 mm)
Weight	1.15lbs
Exit Type	Side
Remote Mounting Distance to Lamp (F32T8)	18 ft
Remote Mounting Wire Gauge	18 AWG
Lead lengths	
Black	25 in (635 mm)
White	25 in (635 mm)
Blue	31 in (787 mm)
Red	45 in (1143 mm)

Specifications by lamp and wattage

Lamp	# of Lamps	Line Volts (V)	System Watts (W)	Nom. Line Current (A)	System Ballast Factor	Ballast Efficacy Factor	Power Factor% (>=)	Crest Factor (<=)	THD% (<=)	Min. Starting Temp (°F/°C)
	3	347	79	0.23	0.87	1.10	99	1.7	10	-22/-30
F32T8	2	347	60	0.17	0.98	1.63	99	1.7	10	-22/-30
	3	347	75	0.22	0.86	1.15	99	1.7	10	60/16
F32T8/WM	2	347	57	0.17	0.96	1.68	99	1.7	10	60/16
	3	347	70	0.20	0.84	1.20	99	1.7	10	60/16
F28T8	2	347	53	0.15	0.94	1.77	99	1.7	10	60/16
F32T8/25W	3	347	63	0.18	0.84	1.33	99	1.7	10	60/16
	3	347	62	0.18	0.88	1.42	99	1.7	10	-22/-30
F25T8	2	347	48	0.14	0.99	2.06	99	1.7	10	-22/-30
F25T8/WM	3	347	53	0.15	0.88	1.66	99	1.7	10	60/16
	3	347	43	0.13	0.84	1.95	98	1.7	10	-22/-30
F17T8	2	347	34	0.11	0.94	2.76	91	1.7	29	-22/-30
F17T8/WM	3	347	36	0.11	0.84	2.33	98	1.7	10	60/16
	3	347	33	0.10	0.76	2.30	97	1.7	13	-22/-30
FE15T8	2	347	25	0.08	0.85	3.40	89	1.7	46	-22/-30
	3	347	65	0.19	0.89	1.37	99	1.7	10	-22/-30
F25T12	2	347	50	0.15	1.01	2.02	99	1.7	10	-22/-30

Safety and performance

c UL us LISTED; UL Class P; UL Type 1 Outdoor; UL Type HL; ICES-005 for EMI and RFI; FCC – CLASS A Non-Consumer

NEMA Premium; ANSI - C82.11 - Cons 2002, ANSI - C62.41 - 1991; Product is compliant with material restriction requirements of RoHS

See page E-1 for warranty information.

UltraMax® Professional Series 347V High-Efficiency
T8 Instant Start Ballasts

74095 – GE432MAXP347-N

UltraMax® P-Series 347V High-Efficiency

4 or 3 – F32T8 347V "N" 0.87 BF UltraMax®P

- Energy-saving high-efficiency instant-start electronic ballast (>90%)
- Instant start ballast for long lamp starting cycles and low initial cost
- Anti-striation control for better light quality
- Cold temperature -22°F Minimum Starting Temperature
- Parallel lamp operation means system maintenance is easier to manage

General characteristics

Ballast Type	Electronic – High-Efficiency Instant Start
Starting Method	Instant start
Lamp Wiring	Parallel
Line Voltage Regulation(+/-)	10%
Ambient Temperature (MAX)	40°C (104°F)
Case Temperature (MAX)	70°C (158°F)
Ballast Factor	Normal
Power Factor Correction	Active
Sound Rating	A (20-24 decibels)
Enclosure Type	Metal
Additional Info	Anti-striation control, Auto-restart, Inherently Thermally Protected, UL Class P

Electrical characteristics

Supply Current Frequency	60 Hz

Order information

10 Pack	Pallet Pack	DIY Pack	IP Pack
74095			

Dimensions

Wiring diagram – LFL 1D – see example on Page 10-61	
Case dimensions – Ref Drawing -A – see Page 10-62	
Length (L)	9.5 in (241 mm)
Width (W)	1.3 in (33 mm)
Height (H)	1.18 in (30 mm)
Mounting dimensions	
Mount Length (M)	8.9 in (226 mm)
Mount Width (X or F)	0.87 in (22 mm)
Mount Slots (MS)	0.3 in (8 mm)
Weight	1.15lbs
Exit Type	Side
Remote Mounting Distance to Lamp (F32T8)	18 ft
Remote Mounting Wire Gauge	18 AWG
Lead lengths	
Black	25 in (635 mm)
White	25 in (635 mm)
Red & Blue	31 in (787 mm)
Yellow	47 in (1194 mm)

Specifications by lamp and wattage

Lamp	# of Lamps	Line Volts (V)	System Watts (W)	Nom. Line Current (A)	System Ballast Factor	Ballast Efficacy Factor	Power Factor% (>=)	Crest Factor (<=)	THD% (<=)	Min. Starting Temp (°F/°C)
	4	347	106	0.30	0.88	.83	99	1.7	10	-22/-30
F32T8	3	347	87	0.25	0.94	1.08	99	1.7	10	-22/-30
	4	347	100	0.29	0.86	.86	99	1.7	10	60/16
F32T8/WM	3	347	83	0.24	0.92	1.11	99	1.7	10	60/16
	4	347	93	0.27	0.84	.90	99	1.7	10	60/16
F28T8	3	347	77	0.22	0.90	1.17	99	1.7	10	60/16
F32T8/25W	4	347	84	0.24	0.84	1.00	99	1.7	10	60/16
	4	347	83	0.24	0.88	1.06	99	1.7	10	-22/-30
F25T8	3	347	69	0.20	0.95	1.38	99	1.7	10	-22/-30
F25T8/WM	4	347	71	0.21	0.88	1.24	99	1.7	10	60/16
	4	347	58	0.17	0.83	1.43	99	1.7	10	-22/-30
F17T8	3	347	48	0.14	0.90	1.88	98	1.7	12	-22/-30
F17T8/WM	4	347	50	0.15	0.83	1.66	99	1.7	10	60/16
	4	347	46	0.14	0.80	1.74	98	1.7	15	-22/-30
FE15T8	3	347	38	0.11	0.82	2.16	97	1.7	17	-22/-30
	4	347	88	0.25	0.88	1.00	99	1.7	10	-22/-30
F25T12	3	347	73	0.21	0.96	1.32	99	1.7	10	-22/-30

Safety and performance

c UL us LISTED; UL Class P; UL Type 1 Outdoor; UL Type HL; ICES-005 for EMI and RFI; FCC – CLASS A Non-Consumer

NEMA Premium; ANSI - C82.11 - Cons 2002, ANSI - C62.41 - 1991; Product is compliant with material restriction requirements of RoHS

See page E-1 for warranty information.

UltraMax® Professional Series 347V High-Efficiency
T8 Instant Start Ballasts

74096 – GE232MAXP347-L

UltraMax® P-Series 347V High-Efficiency

2 or 1 – F32T8 347V "L" 0.77 BF UltraMax®P

- Energy-saving high-efficiency instant-start electronic ballast (>90%)
- Instant start ballast for long lamp starting cycles and low initial cost
- Anti-striation control for better light quality
- Cold temperature -22°F Minimum Starting Temperature
- Parallel lamp operation means system maintenance is easier to manage

General characteristics

Ballast Type	Electronic – High-Efficiency Instant Start
Starting Method	Instant start
Lamp Wiring	Parallel
Line Voltage Regulation(+/-)	10%
Ambient Temperature (MAX)	40°C (104°F)
Case Temperature (MAX)	70°C (158°F)
Ballast Factor	Low
Power Factor Correction	Active
Sound Rating	A (20-24 decibels)
Enclosure Type	Metal
Additional Info	Anti-striation control, Auto-restart, Inherently Thermally Protected, UL Class P

Electrical characteristics

Supply Current Frequency	60 Hz

Order information

10 Pack	Pallet Pack	DIY Pack	IP Pack
74096			

Dimensions

Wiring diagram – LFL 1B – see example on Page 10-61	
Case dimensions – Ref Drawing -A – see Page 10-62	
Length (L)	9.5 in (241 mm)
Width (W)	1.3 in (33 mm)
Height (H)	1.18 in (30 mm)
Mounting dimensions	
Mount Length (M)	8.9 in (226 mm)
Mount Width (X or F)	0.87 in (22 mm)
Mount Slots (MS)	0.3 in (8 mm)
Weight	1.04lbs
Exit Type	Side
Remote Mounting Distance to Lamp (F32T8)	18 ft
Remote Mounting Wire Gauge	18 AWG
Lead lengths	
Black	25 in (635 mm)
White	25 in (635 mm)
Blue	31 in (787 mm)
Red	45 in (1143 mm)

Specifications by lamp and wattage

Lamp	# of Lamps	Line Volts (V)	System Watts (W)	Nom. Line Current (A)	System Ballast Factor	Ballast Efficacy Factor	Power Factor% (>=)	Crest Factor (<=)	THD% (<=)	Min. Starting Temp (°F/°C)
	2	347	48	0.14	0.77	1.60	99	1.7	10	-22/-30
F32T8	1	347	30	0.10	0.90	3.00	87	1.7	37	-22/-30
	2	347	45	0.13	0.77	1.71	99	1.7	10	60/16
F32T8/WM	1	347	29	0.10	0.89	3.07	86	1.7	40	60/16
	2	347	42	0.12	0.74	1.76	98	1.7	10	60/16
F28T8	1	347	27	0.09	0.87	3.22	83	1.7	41	60/16
F32T8/25W	2	347	37	0.12	0.74	2.00	98	1.7	10	60/16
	2	347	37	0.11	0.78	2.11	97	1.7	15	-22/-30
F25T8	1	347	24	0.09	0.91	3.79	77	1.7	50	-22/-30
F25T8/WM	2	347	31	0.10	0.78	2.52	97	1.7	15	60/16
	2	347	27	0.09	0.70	2.59	84	1.7	50	-22/-30
F17T8	1	347	18	0.08	0.86	4.78	68	1.7	53	-22/-30
F17T8/WM	2	347	23	0.08	0.74	3.22	84	1.7	50	60/16
	2	347	22	0.08	0.67	3.05	79	1.7	54	-22/-30
FE15T8	1	347	15	0.06	0.77	5.13	66	1.7	56	-22/-30
	2	347	39	0.11	0.77	1.97	98	1.7	10	-22/-30
F25T12	1	347	25	0.09	0.91	3.64	80	1.7	42	-22/-30

Safety and performance

UL Class P UL Type 1 Outdoor UL Type HL ICES-005 for EMI and RFI FCC – CLASS A Non-Consumer

ANSI - C82.11 - Cons 2002, ANSI - C62.41 - 1991 Product is compliant with material restriction requirements of RoHS

See page E-1 for warranty information.

UltraMax® Professional Series 347V High-Efficiency
T8 Instant Start Ballasts

74097 – GE332MAXP347-L

UltraMax® P-Series 347V High-Efficiency

3 or 2 – F32T8 347V "L" 0.77 BF UltraMax®P

- Energy-saving high-efficiency instant-start electronic ballast (>90%)
- Instant start ballast for long lamp starting cycles and low initial cost
- Anti-striation control for better light quality
- Cold temperature -22°F Minimum Starting Temperature
- Parallel lamp operation means system maintenance is easier to manage

General characteristics

Ballast Type	Electronic – High-Efficiency Instant Start
Starting Method	Instant start
Lamp Wiring	Parallel
Line Voltage Regulation(+/-)	10%
Ambient Temperature (MAX)	40°C (104°F)
Case Temperature (MAX)	70°C (158°F)
Ballast Factor	Low
Power Factor Correction	Active
Sound Rating	A (20-24 decibels)
Enclosure Type	Metal
Additional Info	Anti-striation control, Auto-restart, Inherently Thermally Protected, UL Class P

Electrical characteristics

Supply Current Frequency	60 Hz

Order information

10 Pack	Pallet Pack	DIY Pack	IP Pack
74097			

Dimensions

Wiring diagram – LFL 1C – see example on Page 10-61	
Case dimensions – Ref Drawing -A – see Page 10-62	
Length (L)	9.5 in (241 mm)
Width (W)	1.3 in (33 mm)
Height (H)	1.18 in (30 mm)
Mounting dimensions	
Mount Length (M)	8.9 in (226 mm)
Mount Width (X or F)	0.87 in (22 mm)
Mount Slots (MS)	0.3 in (8 mm)
Weight	1.15lbs
Exit Type	Side
Remote Mounting Distance to Lamp (F32T8)	18 ft
Remote Mounting Wire Gauge	18 AWG
Lead lengths	
Black	25 in (635 mm)
White	25 in (635 mm)
Blue	31 in (787 mm)
Red	45 in (1143 mm)

Specifications by lamp and wattage

Lamp	# of Lamps	Line Volts (V)	System Watts (W)	Nom. Line Current (A)	System Ballast Factor	Ballast Efficacy Factor	Power Factor% (>=)	Crest Factor (<=)	THD% (<=)	Min. Starting Temp (°F/°C)
	3	347	71	0.21	0.77	1.08	99	1.7	10	-22/-30
F32T8	2	347	55	0.16	0.86	1.56	99	1.7	10	-22/-30
	3	347	68	0.20	0.76	1.12	99	1.7	10	60/16
F32T8/WM	2	347	52	0.15	0.85	1.63	99	1.7	10	60/16
	3	347	63	0.18	0.74	1.17	99	1.7	10	60/16
F28T8	2	347	48	0.14	0.82	1.71	99	1.7	10	60/16
F32T8/25W	3	347	55	0.16	0.73	1.33	99	1.7	10	60/16
	3	347	56	0.16	0.78	1.39	99	1.7	10	-22/-30
F25T8	2	347	43	0.13	0.86	2.00	98	1.7	10	-22/-30
F25T8/WM	3	347	47	0.14	0.78	1.66	99	1.7	10	60/16
	3	347	40	0.12	0.74	1.85	98	1.7	10	-22/-30
F17T8	2	347	31	0.10	0.82	2.65	89	1.7	38	-22/-30
F17T8/WM	3	347	35	0.11	0.74	2.11	98	1.7	10	60/16
	3	347	30	0.09	0.67	2.23	96	1.7	13	-22/-30
FE15T8	2	347	23	0.07	0.74	3.22	93	1.7	19	-22/-30
	3	347	58	0.17	0.77	1.33	99	1.7	10	-22/-30
F25T12	2	347	46	0.13	0.87	1.89	99	1.7	10	-22/-30

Safety and performance

UL Class P UL Type 1 Outdoor UL Type HL ICES-005 for EMI and RFI FCC – CLASS A Non-Consumer

ANSI - C82.11 - Cons 2002, ANSI - C62.41 - 1991 Product is compliant with material restriction requirements of RoHS

See page E-1 for warranty information.

UltraMax® Professional Series 347V High-Efficiency
T8 Instant Start Ballasts

74098 – GE432MAXP347-L

UltraMax® P-Series 347V High-Efficiency

4 or 3 – F32T8 347V "L" 0.77 BF UltraMax®P

- Energy-saving high-efficiency instant-start electronic ballast (>90%)
- Instant start ballast for long lamp starting cycles and low initial cost
- Anti-striation control for better light quality
- Cold temperature -22°F Minimum Starting Temperature
- Parallel lamp operation means system maintenance is easier to manage

General characteristics

Ballast Type	Electronic – High-Efficiency Instant Start
Starting Method	Instant start
Lamp Wiring	Parallel
Line Voltage Regulation(+/-)	10%
Ambient Temperature (MAX)	40°C (104°F)
Case Temperature (MAX)	70°C (158°F)
Ballast Factor	Low
Power Factor Correction	Active
Sound Rating	A (20-24 decibels)
Enclosure Type	Metal
Additional Info	Anti-striation control, Auto-restart, Inherently Thermally Protected, UL Class P

Electrical characteristics

Supply Current Frequency	60 Hz

Order information

10 Pack	Pallet Pack	DIY Pack	IP Pack
74098			

Dimensions

Wiring diagram – LFL 1D – see example on Page 10-61	
Case dimensions – Ref Drawing -A – see Page 10-62	
Length (L)	9.5 in (241 mm)
Width (W)	1.3 in (33 mm)
Height (H)	1.18 in (30 mm)
Mounting dimensions	
Mount Length (M)	8.9 in (226 mm)
Mount Width (X or F)	0.87 in (22 mm)
Mount Slots (MS)	0.3 in (8 mm)
Weight	1.15lbs
Exit Type	Side
Remote Mounting Distance to Lamp (F32T8)	18 ft
Remote Mounting Wire Gauge	18 AWG
Lead lengths	
Black	25 in (635 mm)
White	25 in (635 mm)
Red & Blue	31 in (787 mm)
Yellow	47 in (1194 mm)

Specifications by lamp and wattage

Lamp	# of Lamps	Line Volts (V)	System Watts (W)	Nom. Line Current (A)	System Ballast Factor	Ballast Efficacy Factor	Power Factor% (>=)	Crest Factor (<=)	THD% (<=)	Min. Starting Temp (°F/°C)
	4	347	96	0.28	0.77	.80	99	1.7	10	-22/-30
F32T8	3	347	79	0.23	0.84	1.06	99	1.7	10	-22/-30
	4	347	90	0.26	0.76	.84	99	1.7	10	60/16
F32T8/WM	3	347	73	0.21	0.82	1.12	99	1.7	10	60/16
	4	347	84	0.24	0.74	.88	99	1.7	10	60/16
F28T8	3	347	69	0.20	0.81	1.17	99	1.7	10	60/16
F32T8/25W	4	347	74	0.21	0.74	1.00	99	1.7	10	60/16
	4	347	74	0.21	0.78	1.05	99	1.7	10	-22/-30
F25T8	3	347	61	0.18	0.85	1.39	98	1.7	10	-22/-30
F25T8/WM	4	347	63	0.18	0.78	1.24	99	1.7	10	60/16
	4	347	45	0.13	0.74	1.64	98	1.7	13	-22/-30
F17T8	3	347	36	0.11	0.80	2.22	92	1.7	33	-22/-30
F17T8/WM	4	347	38	0.12	0.74	1.95	98	1.7	13	60/16
	4	347	42	0.12	0.68	1.62	97	1.7	15	-22/-30
FE15T8	3	347	35	0.11	0.73	2.09	91	1.7	37	-22/-30
	4	347	78	0.23	0.77	.99	99	1.7	10	-22/-30
F25T12	3	347	65	0.19	0.84	1.29	99	1.7	10	-22/-30

Safety and performance

UL Class P UL Type 1 Outdoor UL Type HL ICES-005 for EMI and RFI FCC – CLASS A Non-Consumer

ANSI - C82.11 - Cons 2002, ANSI - C62.41 - 1991 Product is compliant with material restriction requirements of RoHS

See page E-1 for warranty information.

UltraMax® Professional Series 347V High-Efficiency
T8 Instant Start Ballasts

74109 – GE232MAXP347-H

UltraMax® P-Series 347V High-Efficiency

2 or 1 – F32T8 347V "H" 1.18 BF UltraMax®P

- Energy-saving high-efficiency instant-start electronic ballast (>90%)
- Instant start ballast for long lamp starting cycles and low initial cost
- Anti-striation control for better light quality
- Cold temperature -22°F Minimum Starting Temperature
- Parallel lamp operation means system maintenance is easier to manage

General characteristics

Ballast Type	Electronic – High-Efficiency Instant Start
Starting Method	Instant start
Lamp Wiring	Parallel
Line Voltage Regulation(+/-)	10%
Ambient Temperature (MAX)	40°C (104°F)
Case Temperature (MAX)	70°C (158°F)
Ballast Factor	High
Power Factor Correction	Active
Sound Rating	A (20-24 decibels)
Enclosure Type	Metal
Additional Info	Anti-striation control, Auto-restart, Inherently Thermally Protected, UL Class P

Electrical characteristics

Supply Current Frequency	60 Hz

Order information

10 Pack	Pallet Pack	DIY Pack	IP Pack
74109			

Dimensions

Wiring diagram – LFL 1B – see example on Page 10-61	
Case dimensions – Ref Drawing -A – see Page 10-62	
Length (L)	9.5 in (241 mm)
Width (W)	1.3 in (33 mm)
Height (H)	1.18 in (30 mm)
Mounting dimensions	
Mount Length (M)	8.9 in (226 mm)
Mount Width (X or F)	0.87 in (22 mm)
Mount Slots (MS)	0.3 in (8 mm)
Weight	1.04lbs
Exit Type	Side
Remote Mounting Distance to Lamp (F32T8)	18 ft
Remote Mounting Wire Gauge	18 AWG
Lead lengths	
Black	25 in (635 mm)
White	25 in (635 mm)
Blue	31 in (787 mm)
Red	45 in (1143 mm)

Specifications by lamp and wattage

Lamp	# of Lamps	Line Volts (V)	System Watts (W)	Nom. Line Current (A)	System Ballast Factor	Ballast Efficacy Factor	Power Factor% (>=)	Crest Factor (<=)	THD% (<=)	Min. Starting Temp (°F/°C)
	2	347	70	0.20	1.18	1.69	99	1.7	10	-22/-30
F32T8	1	347	44	0.13	1.32	3.00	99	1.7	10	-22/-30
	2	347	67	0.19	1.15	1.72	99	1.7	10	60/16
F32T8/WM	1	347	42	0.12	1.29	3.07	99	1.7	10	60/16
	2	347	63	0.12	1.30	2.06	99	1.7	17	60/16
F28T8	1	347	39	0.18	1.30	3.33	99	1.7	17	60/16
F32T8/25W	2	347	56	0.16	1.12	2.00	99	1.7	10	60/16
	2	347	55	0.16	1.16	2.11	99	1.7	10	-22/-30
F25T8	1	347	36	0.11	1.32	3.67	99	1.7	30	-22/-30
F25T8/WM	2	347	47	0.14	1.16	2.47	98	1.7	10	60/16
	2	347	37	0.11	1.10	2.97	97	1.7	12	-22/-30
F17T8	1	347	23	0.08	1.25	5.43	87	1.7	52	-22/-30
F17T8/WM	2	347	31	0.10	1.10	3.55	97	1.7	12	60/16
	2	347	30	0.09	1.00	3.33	94	1.7	30	-22/-30
FE15T8	1	347	19	0.07	1.15	6.05	82	1.7	55	-22/-30
F40T8	1	347	53	0.16	1.24	2.34	99	1.7	10	-22/-30
	2	347	61	0.18	1.23	2.02	99	1.7	10	-22/-30
F25T12	1	347	39	0.12	1.45	3.72	95	1.7	20	-22/-30

Safety and performance

UL Class P UL Type 1 Outdoor UL Type HL ICES-005 for EMI and RFI FCC – CLASS A Non-Consumer

ANSI - C82.11 - Cons 2002, ANSI - C62.41 - 1991 High Temperature Rated: Suitable for high temperature applications

70°C max case temp 5 yr warranty or 90°C max case temp 3 yr warranty Product is compliant with material restriction requirements of RoHS

See page E-1 for warranty information.

UltraMax® Professional Series 347V High-Efficiency
T8 Instant Start Ballasts

74111 – GE332MAXP347-H

UltraMax® P-Series 347V High-Efficiency

3 or 2 – F32T8 347V "H" 1.18 BF UltraMax®P

- Energy-saving high-efficiency instant-start electronic ballast (>90%)
- Instant start ballast for long lamp starting cycles and low initial cost
- Anti-striation control for better light quality
- Cold temperature -22°F Minimum Starting Temperature
- Parallel lamp operation means system maintenance is easier to manage

General characteristics

Ballast Type	Electronic – High-Efficiency Instant Start
Starting Method	Instant start
Lamp Wiring	Parallel
Line Voltage Regulation(+/-)	10%
Ambient Temperature (MAX)	40°C (104°F)
Case Temperature (MAX)	70°C (158°F)
Ballast Factor	High
Power Factor Correction	Active
Sound Rating	A (20-24 decibels)
Enclosure Type	Metal
Additional Info	Anti-striation control, Auto-restart, Inherently Thermally Protected, UL Class P

Electrical characteristics

Supply Current Frequency	60 Hz

Order information

10 Pack	Pallet Pack	DIY Pack	IP Pack
74111			

Dimensions

Wiring diagram – LFL 1C – see example on Page 10-61	
Case dimensions – Ref Drawing -A – see Page 10-62	
Length (L)	9.5 in (241 mm)
Width (W)	1.3 in (33 mm)
Height (H)	1.18 in (30 mm)
Mounting dimensions	
Mount Length (M)	8.9 in (226 mm)
Mount Width (X or F)	0.87 in (22 mm)
Mount Slots (MS)	0.3 in (8 mm)
Weight	1.15lbs
Exit Type	Side
Remote Mounting Distance to Lamp (F32T8)	18 ft
Remote Mounting Wire Gauge	18 AWG
Lead lengths	
Black	25 in (635 mm)
White	25 in (635 mm)
Blue	31 in (787 mm)
Red	45 in (1143 mm)

Specifications by lamp and wattage

Lamp	# of Lamps	Line Volts (V)	System Watts (W)	Nom. Line Current (A)	System Ballast Factor	Ballast Efficacy Factor	Power Factor% (>=)	Crest Factor (<=)	THD% (<=)	Min. Starting Temp (°F/°C)
	3	347	105	0.30	1.18	1.12	99	1.7	10	-22/-30
F32T8	2	347	79	0.23	1.29	1.63	99	1.7	10	-22/-30
	3	347	100	0.29	1.15	1.15	99	1.7	10	60/16
F32T8/WM	2	347	76	0.22	1.27	1.67	99	1.7	10	60/16
	3	347	93	0.27	1.13	1.22	99	1.7	17	60/16
F28T8	2	347	71	0.20	1.26	1.77	99	1.7	17	60/16
F32T8/25W	3	347	85	0.25	1.13	1.33	99	1.7	10	60/16
	3	347	82	0.24	1.17	1.43	99	1.7	10	-22/-30
F25T8	2	347	62	0.18	1.30	2.10	99	1.7	10	-22/-30
F25T8/WM	3	347	70	0.20	1.17	1.67	99	1.7	10	60/16
	3	347	60	0.17	1.10	1.83	99	1.7	10	-22/-30
F17T8	2	347	44	0.13	1.22	2.77	98	1.7	13	-22/-30
F17T8/WM	3	347	52	0.15	1.10	2.12	99	1.7	10	60/16
	3	347	46	0.14	1.00	2.17	98	1.7	12	-22/-30
FE15T8	2	347	36	0.11	1.11	3.08	91	1.7	33	-22/-30
F40T8	2	347	99	0.27	1.28	1.29	99	1.7	10	-22/-30
	3	347	89	0.26	1.24	1.39	99	1.7	10	-22/-30
F25T12	2	347	68	0.20	1.40	2.06	99	1.7	10	-22/-30

Safety and performance

UL Class P UL Type 1 Outdoor UL Type HL ICES-005 for EMI and RFI FCC – CLASS A Non-Consumer

ANSI - C82.11 - Cons 2002, ANSI - C62.41 - 1991 High Temperature Rated: Suitable for high temperature applications

70°C max case temp 5 yr warranty or 90°C max case temp 3 yr warranty Product is compliant with material restriction requirements of RoHS

See page E-1 for warranty information.

UltraMax® Professional Series 347V High-Efficiency
T8 Instant Start Ballasts

74113 – GE432MAXP347-H

UltraMax® P-Series 347V High-Efficiency

4 or 3 – F32T8 347V "H" 1.18 BF UltraMax®P

- Energy-saving high-efficiency instant-start electronic ballast (>90%)
- Instant start ballast for long lamp starting cycles and low initial cost
- Anti-striation control for better light quality
- Cold temperature -22°F Minimum Starting Temperature
- Parallel lamp operation means system maintenance is easier to manage

General characteristics

Ballast Type	Electronic – High-Efficiency Instant Start
Starting Method	Instant start
Lamp Wiring	Parallel
Line Voltage Regulation(+/-)	10%
Ambient Temperature (MAX)	40°C (104°F)
Case Temperature (MAX)	70°C (158°F)
Ballast Factor	High
Power Factor Correction	Active
Sound Rating	A (20-24 decibels)
Enclosure Type	Metal
Additional Info	Anti-striation control, Auto-restart, Inherently Thermally Protected, UL Class P

Electrical characteristics

Supply Current Frequency	60 Hz

Order information

10 Pack	Pallet Pack	DIY Pack	IP Pack
74113			

Dimensions

Wiring diagram – LFL 1D – see example on Page 10-61	
Case dimensions – Ref Drawing -A – see Page 10-62	
Length (L)	9.5 in (241 mm)
Width (W)	1.7 in (43 mm)
Height (H)	1.18 in (30 mm)
Mounting dimensions	
Mount Length (M)	8.9 in (226 mm)
Mount Width (X or F)	1.05 in (27 mm)
Mount Slots (MS)	0.3 in (8 mm)
Weight	1.5lbs
Exit Type	Side
Remote Mounting Distance to Lamp (F32T8)	18 ft
Remote Mounting Wire Gauge	18 AWG
Lead lengths	
Black	25 in (635 mm)
White	25 in (635 mm)
Red & Blue	31 in (787 mm)
Yellow	47 in (1194 mm)

Specifications by lamp and wattage

Lamp	# of Lamps	Line Volts (V)	System Watts (W)	Nom. Line Current (A)	System Ballast Factor	Ballast Efficacy Factor	Power Factor% (>=)	Crest Factor (<=)	THD% (<=)	Min. Starting Temp (°F/°C)
	4	347	137	0.39	1.18	.86	99	1.7	10	-22/-30
F32T8	3	347	114	0.33	1.25	1.10	99	1.7	10	-22/-30
	4	347	134	0.39	1.15	.86	99	1.7	10	60/16
F32T8/WM	3	347	111	0.32	1.23	1.11	99	1.7	10	60/16
	4	347	126	0.36	1.13	.90	99	1.7	17	60/16
F28T8	3	347	104	0.30	1.21	1.16	99	1.7	17	60/16
F32T8/25W	4	347	113	0.32	1.12	.99	99	1.7	10	60/16
	4	347	111	0.32	1.16	1.05	99	1.7	10	-22/-30
F25T8	3	347	92	0.27	1.26	1.37	99	1.7	10	-22/-30
F25T8/WM	4	347	96	0.28	1.16	1.21	99	1.7	10	60/16
	4	347	78	0.23	1.10	1.41	99	1.7	10	-22/-30
F17T8	3	347	66	0.19	1.18	1.79	98	1.7	11	-22/-30
F17T8/WM	4	347	68	0.19	1.10	1.62	99	1.7	10	60/16
	4	347	61	0.18	1.00	1.64	98	1.7	13	-22/-30
FE15T8	3	347	51	0.15	1.06	2.08	97	1.7	15	-22/-30
F40T8	3	347	147	0.41	1.33	.90	99	1.7	10	-22/-30
	4	347	121	0.35	1.23	1.02	99	1.7	10	-22/-30
F25T12	3	347	101	0.29	1.33	1.32	99	1.7	10	-22/-30

Safety and performance

c UL us LISTED — UL Class P — UL Type 1 Outdoor — UL Type HL — ICES-005 for EMI and RFI — FCC – CLASS A Non-Consumer

NEMA Premium — ANSI - C82.11 - Cons 2002, ANSI - C62.41 - 1991 — High Temperature Rated: Suitable for high temperature applications

70°C max case temp 5 yr warranty or 90°C max case temp 3 yr warranty — Product is compliant with material restriction requirements of RoHS

See page E-1 for warranty information.

UltraMax® Professional Series 480V High-Efficiency
T8 Instant Start Ballasts

62718 – GE232MAXP480-H

UltraMax® P-Series 480V High-Efficiency

2 or 1 – F32T8 480V "H" 1.18 BF UltraMax®P

- Energy-saving high-efficiency instant-start electronic ballast (>90%)
- 3-Stage 3G Transient Suppression –line to line transient capability up to 6KV
- Anti-striation control for better light quality
- UL 55°C Ambient Temperature rating
- Cold temperature -22°F Minimum Starting Temperature

General characteristics

Ballast Type	Electronic – High-Efficiency Instant Start
Starting Method	Instant start
Lamp Wiring	Parallel
Line Voltage Regulation(+/-)	10%
Ambient Temperature (MAX)	55°C (131°F)
Case Temperature (MAX)	90°C (194°F)
Ballast Factor	High
Power Factor Correction	Active
Sound Rating	A (20-24 decibels)
Enclosure Type	Metal
Additional Info	Anti-striation control, Auto-restart, Inherently Thermally Protected, UL Class P

Electrical characteristics

Supply Current Frequency	60 Hz

Order information

10 Pack	Pallet Pack	DIY Pack	IP Pack
62718			

Dimensions

Wiring diagram – LFL 1B – see example on Page 10-61	
Case dimensions – Ref Drawing -A – see Page 10-62	
Length (L)	11.75 in (299mm)
Width (W)	1.7 in (43 mm)
Height (H)	1.18 in (30 mm)
Mounting dimensions	
Mount Length (M)	11.1 in (283 mm)
Mount Width (X or F)	1.05 in (27 mm)
Mount Slots (MS)	0.3 in (8 mm)
Weight	2.15lbs
Exit Type	Side
Remote Mounting Distance to Lamp (F32T8)	18 ft
Remote Mounting Wire Gauge	18 AWG
Lead lengths	
Black	25 in (635 mm)
White	25 in (635 mm)
Blue	31 in (787 mm)
Red	45 in (1143 mm)

Specifications by lamp and wattage

Lamp	# of Lamps	Line Volts (V)	System Watts (W)	Nom. Line Current (A)	System Ballast Factor	Ballast Efficacy Factor	Power Factor% (>=)	Crest Factor (<=)	THD% (<=)	Min. Starting Temp (°F/°C)
	2	480	73	0.16	1.18	1.62	95	1.7	10	-22/-30
F32T8	1	480	45	0.10	1.39	3.09	88	1.7	15	-22/-30
	2	480	68	0.15	1.16	1.71	92	1.7	10	10/-12
F32T8/WM	1	480	42	0.10	1.37	3.26	88	1.7	15	10/-12
	2	480	64	0.14	1.13	1.77	92	1.7	10	10/-12
F28T8	1	480	41	0.09	1.35	3.29	88	1.7	15	10/-12
	2	480	59	0.13	1.11	1.88	92	1.7	10	10/-12
F32T8/25W	1	480	38	0.09	1.34	3.53	88	1.7	15	10/-12
	2	480	58	0.13	1.17	2.02	92	1.7	10	-22/-30
F25T8	1	480	38	0.09	1.38	3.63	88	1.7	15	-22/-30
	2	480	42	0.09	1.18	2.81	88	1.7	15	-22/-30
F17T8	1	480	28	0.07	1.39	4.96	80	1.7	20	-22/-30
	2	480	61	0.14	0.85	1.39	92	1.7	10	10/-12
F36T8	1	480	39	0.09	1.02	2.62	88	1.7	15	10/-12
F40T8	1	480	58	0.13	1.32	2.28	92	1.7	10	60/16

Safety and performance

UL Class P UL Type 1 Outdoor UL Type HL FCC – CLASS A Non-Consumer ANSI - C82.11 - Cons 2002, ANSI - C62.41 – 2005, Category A, 6KV, 12 Ohms

UL 55°C Ambient Temperature rating 70°C max case temp 5 yr warranty or 90°C max case temp 3 yr warranty Product is compliant with material restriction requirements of RoHS

See page E-1 for warranty information.

UltraMax® Professional Series 480V High-Efficiency
T8 Instant Start Ballasts

62719 – GE332MAXP480-H

UltraMax® P-Series 480V High-Efficiency

3 or 2– F32T8 480V "H" 1.18 BF UltraMax®P

- Energy-saving high-efficiency instant-start electronic ballast (>90%)
- 3-Stage 3G Transient Suppression –line to line transient capability up to 6KV
- Anti-striation control for better light quality
- UL 55°C Ambient Temperature rating
- Cold temperature -22°F Minimum Starting Temperature

General characteristics

Ballast Type	Electronic – High-Efficiency Instant Start
Starting Method	Instant start
Lamp Wiring	Parallel
Line Voltage Regulation(+/-)	10%
Ambient Temperature (MAX)	55°C (131°F)
Case Temperature (MAX)	90°C (194°F)
Ballast Factor	High
Power Factor Correction	Active
Sound Rating	A (20-24 decibels)
Enclosure Type	Metal
Additional Info	Anti-striation control, Auto-restart, Inherently Thermally Protected, UL Class P

Electrical characteristics

Supply Current Frequency	60 Hz

Order information

10 Pack	Pallet Pack	DIY Pack	IP Pack
62719			

Dimensions

Wiring diagram – LFL 1C – see example on Page 10-61	
Case dimensions – Ref Drawing -A – see Page 10-62	
Length (L)	11.75 in (299mm)
Width (W)	1.7 in (43 mm)
Height (H)	1.18 in (30 mm)
Mounting dimensions	
Mount Length (M)	11.1 in (283 mm)
Mount Width (X or F)	1.05 in (27 mm)
Mount Slots (MS)	0.3 in (8 mm)
Weight	2.15lbs
Exit Type	Side
Remote Mounting Distance to Lamp (F32T8)	18 ft
Remote Mounting Wire Gauge	18 AWG
Lead lengths	
Black	25 in (635 mm)
White	25 in (635 mm)
Blue	31 in (787 mm)
Red	45 in (1143 mm)

Specifications by lamp and wattage

Lamp	# of Lamps	Line Volts (V)	System Watts (W)	Nom. Line Current (A)	System Ballast Factor	Ballast Efficacy Factor	Power Factor% (>=)	Crest Factor (<=)	THD% (<=)	Min. Starting Temp (°F/°C)
F32T8	3	480	108	0.23	1.18	1.09	95	1.7	10	-22/-30
	2	480	82	0.18	1.31	1.60	95	1.7	10	-22/-30
F32T8/WM	3	480	100	0.22	1.16	1.16	95	1.7	10	10/-12
	2	480	76	0.16	1.28	1.68	95	1.7	10	10/-12
F28T8	3	480	94	0.20	1.13	1.20	95	1.7	10	10/-12
	2	480	72	0.16	1.26	1.75	95	1.7	10	10/-12
F32T8/25W	3	480	87	0.19	1.11	1.28	95	1.7	10	10/-12
	2	480	67	0.15	1.25	1.87	95	1.7	10	10/-12
F25T8	3	480	84	0.18	1.17	1.39	95	1.7	10	-22/-30
	2	480	65	0.14	1.29	1.98	95	1.7	10	-22/-30
F17T8	3	480	60	0.14	1.18	1.97	95	1.7	10	-22/-30
	2	480	47	0.10	1.30	2.77	90	1.7	15	-22/-30
F36T8	3	480	90	0.19	0.85	0.94	95	1.7	10	10/-12
	2	480	68	0.15	0.95	1.40	95	1.7	10	10/-12
F40T8	2	480	103	0.22	1.24	1.20	95	1.7	10	60/16

Safety and performance

c UL us LISTED; UL Class P; UL Type 1 Outdoor; UL Type HL; FCC – CLASS A Non-Consumer; ANSI - C82.11 - Cons 2002, ANSI - C62.41 – 2005, Category A, 6KV, 12 Ohms

UL 55°C Ambient Temperature rating; 70°C max case temp 5 yr warranty or 90°C max case temp 3 yr warranty; Product is compliant with material restriction requirements of RoHS

See page E-1 for warranty information.

UltraMax® Professional Series 480V High-Efficiency
T8 Instant Start Ballasts

62720 – GE432MAXP480-H

UltraMax® P-Series 480V High-Efficiency

4 or 3– F32T8 480V "H" 1.18 BF UltraMax®P

- Energy-saving high-efficiency instant-start electronic ballast (>90%)
- 3-Stage 3G Transient Suppression –line to line transient capability up to 6KV
- Anti-striation control for better light quality
- UL 55°C Ambient Temperature rating
- Cold temperature -22°F Minimum Starting Temperature

General characteristics

Ballast Type	Electronic – High-Efficiency Instant Start
Starting Method	Instant start
Lamp Wiring	Parallel
Line Voltage Regulation(+/-)	10%
Ambient Temperature (MAX)	55°C (131°F)
Case Temperature (MAX)	90°C (194°F)
Ballast Factor	High
Power Factor Correction	Active
Sound Rating	A (20-24 decibels)
Enclosure Type	Metal
Additional Info	Anti-striation control, Auto-restart, Inherently Thermally Protected, UL Class P

Electrical characteristics

Supply Current Frequency	60 Hz

Order information

10 Pack	Pallet Pack	DIY Pack	IP Pack
62720			

Dimensions

Wiring diagram – LFL 1D – see example on Page 10-61	
Case dimensions – Ref Drawing -A – see Page 10-62	
Length (L)	11.75 in (299mm)
Width (W)	1.7 in (43 mm)
Height (H)	1.18 in (30 mm)
Mounting dimensions	
Mount Length (M)	11.1 in (283 mm)
Mount Width (X or F)	1.05 in (27 mm)
Mount Slots (MS)	0.3 in (8 mm)
Weight	2.15lbs
Exit Type	Side
Remote Mounting Distance to Lamp (F32T8)	18 ft
Remote Mounting Wire Gauge	18 AWG
Lead lengths	
White and Black	25 in (635 mm)
Blue	31 in (787 mm)
Red	31 in (787 mm)
Yellow	47 in (1194 mm)

Specifications by lamp and wattage

Lamp	# of Lamps	Line Volts (V)	System Watts (W)	Nom. Line Current (A)	System Ballast Factor	Ballast Efficacy Factor	Power Factor% (>=)	Crest Factor (<=)	THD% (<=)	Min. Starting Temp (°F/°C)
	4	480	144	0.31	1.18	0.82	95	1.7	10	-22/-30
F32T8	3	480	118	0.25	1.29	1.09	95	1.7	10	-22/-30
	4	480	134	0.29	1.16	0.87	95	1.7	10	10/-12
F32T8/WM	3	480	110	0.24	1.26	1.15	95	1.7	10	10/-12
	4	480	125	0.27	1.13	0.90	95	1.7	10	10/-12
F28T8	3	480	103	0.22	1.23	1.19	95	1.7	10	10/-12
	4	480	115	0.26	1.11	0.97	95	1.7	10	10/-12
F32T8/25W	3	480	96	0.21	1.22	1.27	95	1.7	10	10/-12
	4	480	110	0.24	1.17	1.06	95	1.7	10	-22/-30
F25T8	3	480	91	0.21	1.26	1.38	95	1.7	10	-22/-30
	4	480	79	0.17	1.18	1.49	95	1.7	10	-22/-30
F17T8	3	480	66	0.14	1.27	1.92	95	1.7	10	-22/-30
	4	480	119	0.26	0.85	0.71	95	1.7	10	10/-12
F36T8	3	480	98	0.21	0.93	0.95	95	1.7	10	10/-12
F40T8	3	480	148	0.32	1.21	0.82	95	1.7	10	60/16

Safety and performance

UL Class P UL Type 1 Outdoor UL Type HL FCC – CLASS A Non-Consumer ANSI - C82.11 - Cons 2002, ANSI - C62.41 – 2005, Category A, 6KV, 12 Ohms

UL 55°C Ambient Temperature rating 70°C max case temp 5 yr warranty or 90°C max case temp 3 yr warranty Product is compliant with material restriction requirements of RoHS

See page E-1 for warranty information.

UltraMax® General Series T8 Multi-Voltage 120–277V
T8 Instant Start Ballasts For F17 (2 ft), F25 (3 ft), F32 (4 ft), F40 (5 ft) Lamps

72269 – GE132MAX-G-N (Replaces GE-132-MV-N)

UltraMax® G-Series T8 Multivolt 120V-277V

1 – F32T8 120 to 277 "N" .87 BF Multivolt UltraMax®G

- High-performance electronic ballast for all general fluorescent applications
- Instant start electronic ballast for long lamp starting cycles and low initial cost
- Multi-voltage technology handles voltage from 120 to 277V
- Parallel lamp operation means system maintenance is easier to manage
- Anti-striation control for better light quality
- Cold temperature -22°F Minimum Starting Temperature

General characteristics

Ballast Type	Electronic –Multivolt Instant Start
Starting Method	Instant start
Lamp Wiring	
Line Voltage Regulation(+/-)	10%
Ambient Temperature (MAX)	40°C (104°F)
Case Temperature (MAX)	70°C (158°F)
Ballast Factor	Normal
Power Factor Correction	Active
Sound Rating	A (20-24 decibels)
Enclosure Type	Metal
Additional Info	Anti-striation control, Auto-restart, Inherently Thermally Protected, UL Class P

Electrical characteristics

Supply Current Frequency	50 Hz/60 Hz

Order information

10 Pack	Pallet Pack	DIY Pack	IP Pack
72269	72270		

Dimensions

Wiring diagram – LFL 1A – see example on Page 10-61	
Case dimensions – Ref Drawing -A – see Page 10-62	
Length (L)	9.5 in (241 mm)
Width (W)	1.3 in (33 mm)
Height (H)	1.0 in (25.4 mm)
Mounting dimensions	
Mount Length (M)	8.9 in (226 mm)
Mount Width (X or F)	0.87 in (22 mm)
Mount Slots (MS)	0.3 in (8 mm)
Weight	0.6lbs
Exit Type	Side
Remote Mounting Distance to Lamp (F32T8)	18 ft
Remote Mounting Wire Gauge	18 AWG
Lead lengths	
Black	25 in (635 mm)
White	25 in (635 mm)
Blue	31 in (787 mm)
Red	37 in (940 mm)

Specifications by lamp and wattage

Lamp	# of Lamps	Line Volts (V)	System Watts (W)	Nom. Line Current (A)	System Ballast Factor	Ballast Efficacy Factor	Power Factor% (>=)	Crest Factor (<=)	THD% (<=)	Min. Starting Temp (°F/°C)
	1	120	28	0.24	.88	3.14	99	1.5	10	-22/-30
F32T8	1	277	28	0.11	.88	3.14	98	1.5	10	-22/-30
	1	120	27	0.23	.87	3.22	99	1.5	10	-22/-30
F32T8/WM	1	277	27	0.10	.87	3.22	98	1.5	10	-22/-30
	1	120	25	0.22	.89	3.56	99	1.5	10	-22/-30
F28T8	1	277	25	0.10	.89	3.56	98	1.5	10	-22/-30
	1	120	24	0.19	.88	3.67	99	1.5	10	-22/-30
F32T8/25W	1	277	23	0.09	.88	3.83	94	1.5	10	-22/-30
	1	120	23	0.19	.94	4.09	99	1.5	10	-22/-30
F25T8	1	277	24	0.09	.94	3.92	94	1.5	10	-22/-30
	1	120	17	0.14	.98	5.76	99	1.5	10	-22/-30
F17T8	1	277	17	0.07	.98	5.76	90	1.5	10	-22/-30
	1	120	14	0.12	.92	6.57	99	1.5	10	-22/-30
FE15T8	1	277	14	0.06	.92	6.57	88	1.5	10	-22/-30
	1	120	25	0.21	.94	3.76	99	1.5	10	0/-18
F25T12	1	277	25	0.10	.94	3.76	94	1.5	10	0/-18

Safety and performance

c UL us LISTED — UL Class P — UL Type 1 Outdoor — UL Type HL — FCC – CLASS A Non-Consumer

NEMA Premium — Product is compliant with material restriction requirements of RoHS

See page E-1 for warranty information.

UltraMax® General Series T8 Multi-Voltage 120–277V
T8 Instant Start Ballasts For F17 (2 ft), F25 (3 ft), F32 (4 ft), F40 (5 ft) Lamps

74803 – GE232MAX-G-H (Replaces GE232MV-H)

UltraMax® G-Series T8 Multivolt 120V-277V

2 or 1 – F32T8 120 to 277 "H" 1.18 BF Multivolt UltraMax®G

- High-performance electronic ballast for all general fluorescent applications
- Instant start electronic ballast for long lamp starting cycles and low initial cost
- Multi-voltage technology handles voltage from 120 to 277V
- Parallel lamp operation means system maintenance is easier to manage
- Anti-striation control for better light quality
- Cold temperature -22°F Minimum Starting Temperature

General characteristics

Ballast Type	Electronic –Multivolt Instant Start
Starting Method	Instant start
Lamp Wiring	Parallel
Line Voltage Regulation(+/-)	10%
Ambient Temperature (MAX)	40°C (104°F)
Case Temperature (MAX)	70°C (158°F)
Ballast Factor	High
Power Factor Correction	Active
Sound Rating	A (20-24 decibels)
Enclosure Type	Metal
Additional Info	Anti-striation control, Auto-restart, Inherently Thermally Protected, UL Class P

Electrical characteristics

Supply Current Frequency	50 Hz/60 Hz

Order information

10 Pack	Pallet Pack	DIY Pack	IP Pack
74803	74804		

Dimensions

Wiring diagram – LFL 1B – see example on Page 10-61	
Case dimensions – Ref Drawing -A – see Page 10-62	
Length (L)	9.5 in (241 mm)
Width (W)	1.3 in (33 mm)
Height (H)	1.18 in (30 mm)
Mounting dimensions	
Mount Length (M)	8.9 in (226 mm)
Mount Width (X or F)	0.87 in (22 mm)
Mount Slots (MS)	0.3 in (8 mm)
Weight	1.06lbs
Exit Type	Side
Remote Mounting Distance to Lamp (F32T8)	18 ft
Remote Mounting Wire Gauge	18 AWG
Lead lengths	
Black	25 in (635 mm)
White	25 in (635 mm)
Blue	31 in (787 mm)
Red	45 in (1143 mm)

Specifications by lamp and wattage

Lamp	# of Lamps	Line Volts (V)	System Watts (W)	Nom. Line Current (A)	System Ballast Factor	Ballast Efficacy Factor	Power Factor% (>=)	Crest Factor (<=)	THD% (<=)	Min. Starting Temp (°F/°C)
	2	120	77	0.65	1.18	1.53	99	1.7	10	-22/-30
	2	277	76	0.28	1.18	1.55	98	1.7	10	-22/-30
	1	120	48	0.44	1.34	2.79	99	1.7	10	-22/-30
F32T8	1	277	48	0.2	1.34	2.79	97	1.7	10	-22/-30
	2	120	70	0.63	1.13	1.61	99	1.7	10	60/16
	2	277	69	0.28	1.13	1.64	98	1.7	10	60/16
	1	120	45	0.42	1.30	2.89	99	1.7	10	60/16
F32T8/WM	1	277	45	0.19	1.30	2.89	96	1.7	10	60/16
	2	120	65	0.57	1.10	1.69	99	1.7	10	60/16
	2	277	64	0.26	1.10	1.72	98	1.7	10	60/16
	1	120	42	0.39	1.28	3.05	99	1.7	10	60/16
F28T8	1	277	42	0.18	1.28	3.05	96	1.7	10	60/16
	2	120	60	0.51	1.10	1.83	99	1.7	10	60/16
	2	277	60	0.22	1.10	1.83	98	1.7	15	60/16
	1	120	37	0.31	1.28	3.46	99	1.7	10	60/16
F32T8/25W	1	277	37	0.14	1.28	3.46	97	1.7	18	60/16
	2	120	57	0.51	1.16	2.04	99	1.7	10	-22/-30
	2	277	57	0.23	1.16	2.04	97	1.7	10	-22/-30
	1	120	38	0.35	1.32	3.47	99	1.7	10	-22/-30
F25T8	1	277	38	0.16	1.32	3.47	96	1.7	10	-22/-30
	2	120	41	0.36	1.15	2.80	99	1.7	10	-22/-30
	2	277	41	0.16	1.15	2.80	96	1.7	10	-22/-30
	1	120	27	0.24	1.31	4.85	99	1.7	10	-22/-30
F17T8	1	277	27	0.11	1.31	4.85	94	1.7	10	-22/-30
	1	120	57	0.53			99	1.7	10	0/-18
F40T8	1	277	57	0.23			97	1.7	10	0/-18

Safety and performance

UL Class P UL Type 1 Outdoor UL Type HL FCC – CLASS A Non-Consumer

Product is compliant with material restriction requirements of RoHS

See page E-1 for warranty information.

UltraMax® General Series T8 Multi-Voltage 120–277V
T8 Instant Start Ballasts For F17 (2 ft), F25 (3 ft), F32 (4 ft), F40 (5 ft) Lamps

72273 – GE232MAX-G-L (Replaces GE-232-MV-L)

UltraMax® G-Series T8 Multivolt 120V-277V

2 or 1 – F32T8 120 to 277 "L" .77 BF Multivolt UltraMax®G

- High-performance electronic ballast for all general fluorescent applications
- Instant start electronic ballast for long lamp starting cycles and low initial cost
- Multi-voltage technology handles voltage from 120 to 277V
- Parallel lamp operation means system maintenance is easier to manage
- Anti-striation control for better light quality
- Cold temperature -22°F Minimum Starting Temperature

General characteristics

Ballast Type	Electronic – High-Efficiency Multivolt Instant Start
Starting Method	Instant start
Lamp Wiring	Parallel
Line Voltage Regulation(+/-)	10%
Ambient Temperature (MAX)	40°C (104°F)
Case Temperature (MAX)	70°C (158°F)
Ballast Factor	Low
Power Factor Correction	Active
Sound Rating	A (20-24 decibels)
Enclosure Type	Metal
Additional Info	Anti-striation control, Auto-restart, Inherently Thermally Protected, UL Class P

Electrical characteristics

Supply Current Frequency	50 Hz/60 Hz

Order information

10 Pack	Pallet Pack	DIY Pack	IP Pack
72273			

Dimensions

Wiring diagram – LFL 1B – see example on Page 10-61	
Case dimensions – Ref Drawing -A – see Page 10-62	
Length (L)	9.5 in (241 mm)
Width (W)	1.3 in (33 mm)
Height (H)	1.0 in (25.4 mm)
Mounting dimensions	
Mount Length (M)	8.9 in (226 mm)
Mount Width (X or F)	0.87 in (22 mm)
Mount Slots (MS)	0.3 in (8 mm)
Weight	0.7lbs
Exit Type	Side
Remote Mounting Distance to Lamp (F32T8)	18 ft
Remote Mounting Wire Gauge	18 AWG
Lead lengths	
Black	25 in (635 mm)
White	25 in (635 mm)
Blue	31 in (787 mm)
Red	37 in (940 mm)

Specifications by lamp and wattage

Lamp	# of Lamps	Line Volts (V)	System Watts (W)	Nom. Line Current (A)	System Ballast Factor	Ballast Efficacy Factor	Power Factor% (>=)	Crest Factor (<=)	THD% (<=)	Min. Starting Temp (°F/°C)
	2	120	48	0.42	.78	1.63	99	1.5	10	-22/-30
	2	277	48	0.19	.78	1.63	98	1.5	10	-22/-30
	1	120	30	0.24	.96	3.20	99	1.5	10	-22/-30
F32T8	1	277	30	0.11	.96	3.20	95	1.5	10	-22/-30
	2	120	46	0.39	.77	1.67	99	1.5	10	-22/-30
	2	277	46	0.17	.77	1.67	98	1.5	10	-22/-30
	1	120	28	0.22	.77	2.75	99	1.5	10	-22/-30
F32T8/WM	1	277	28	0.11	.77	2.75	94	1.5	10	-22/-30
	2	120	43	0.36	.77	1.79	99	1.5	10	-22/-30
	2	277	42	0.16	.77	1.83	97	1.5	10	-22/-30
	1	120	26	0.21	.77	2.96	99	1.5	10	-22/-30
F28T8	1	277	26	0.10	.77	2.96	94	1.5	10	-22/-30
	2	120	39	0.33	.78	2.00	99	1.5	10	-22/-30
	2	277	39	0.15	.78	2.00	96	1.5	10	-22/-30
	1	120	22	0.18	.78	3.55	98	1.5	10	-22/-30
F32T8/25W	1	277	22	0.09	.78	3.55	93	1.5	10	-22/-30
	2	120	40	0.34	.78	1.95	99	1.5	10	-22/-30
	2	277	40	0.15	.78	1.95	96	1.5	10	-22/-30
	1	120	23	0.21	.96	4.17	99	1.5	10	-22/-30
F25T8	1	277	24	0.10	.96	4.00	93	1.5	15	-22/-30
	2	120	28	0.24	.79	2.82	99	1.5	10	-22/-30
	2	277	29	0.11	.79	2.72	94	1.5	10	-22/-30
	1	120	17	0.15	.98	5.76	99	1.5	10	-22/-30
F17T8	1	277	18	0.08	.98	5.44	90	1.5	10	-22/-30
	2	120	23	0.20	.78	3.39	99	1.5	10	-22/-30
	2	277	23	0.10	.78	3.39	91	1.5	15	-22/-30
	1	120	14	0.13	.78	5.57	99	1.5	10	-22/-30
FE15T8	1	277	15	0.07	.78	5.20	87	1.5	10	-22/-30
	2	120	42	0.35	.80	1.90	99	1.5	10	0/-18
	2	277	41	0.15	.80	1.95	97	1.5	10	0/-18
	1	120	24	0.21	.80	3.33	99	1.5	10	0/-18
F25T12	1	277	24	0.10	.80	3.33	95	1.5	10	0/-18

Safety and performance

UL LISTED · UL Class P · UL Type 1 Outdoor · UL Type HL · FCC – CLASS A Non-Consumer

NEMA Premium · Product is compliant with material restriction requirements of RoHS

See page E-1 for warranty information.

UltraMax® General Series T8 Multi-Voltage 120–277V
T8 Instant Start Ballasts For F17 (2 ft), F25 (3 ft), F32 (4 ft), F40 (5 ft) Lamps

72275 – GE232MAX-G-N (Replaces GE-232-MV-N)

UltraMax® G-Series T8 Multivolt 120V-277V

2 or 1 – F32T8 120 to 277 "N" .87 BF Multivolt UltraMax®G

- High-performance electronic ballast for all general fluorescent applications
- Instant start electronic ballast for long lamp starting cycles and low initial cost
- Multi-voltage technology handles voltage from 120 to 277V
- Parallel lamp operation means system maintenance is easier to manage
- Anti-striation control for better light quality
- Cold temperature -22°F Minimum Starting Temperature

General characteristics

Ballast Type	Electronic –Multivolt Instant Start
Starting Method	Instant start
Lamp Wiring	Parallel
Line Voltage Regulation(+/-)	10%
Ambient Temperature (MAX)	40°C (104°F)
Case Temperature (MAX)	70°C (158°F)
Ballast Factor	Normal
Power Factor Correction	Active
Sound Rating	A (20-24 decibels)
Enclosure Type	Metal
Additional Info	Anti-striation control, Auto-restart, Inherently Thermally Protected, UL Class P

Electrical characteristics

Supply Current Frequency	50 Hz/60 Hz

Order information

10 Pack	Pallet Pack	DIY Pack	IP Pack
72275	72276	93883	

Dimensions

Wiring diagram – LFL 1B – see example on Page 10-61	
Case dimensions – Ref Drawing -A – see Page 10-62	
Length (L)	9.5 in (241 mm)
Width (W)	1.3 in (33 mm)
Height (H)	1.18 in (30 mm)
Mounting dimensions	
Mount Length (M)	8.9 in (226 mm)
Mount Width (X or F)	0.87 in (22 mm)
Mount Slots (MS)	0.3 in (8 mm)
Weight	1.06lbs
Exit Type	Side
Remote Mounting Distance to Lamp (F32T8)	18 ft
Remote Mounting Wire Gauge	18 AWG
Lead lengths	
Black	25 in (635 mm)
White	25 in (635 mm)
Blue	31 in (787 mm)
Red	45 in (1143 mm)

Specifications by lamp and wattage

Lamp	# of Lamps	Line Volts (V)	System Watts (W)	Nom. Line Current (A)	System Ballast Factor	Ballast Efficacy Factor	Power Factor% (>=)	Crest Factor (<=)	THD% (<=)	Min. Starting Temp (°F/°C)
	2	120	57	0.48	.88	1.54	99	1.7	10	-22/-30
	2	277	55	0.2	.88	1.60	98	1.7	10	-22/-30
	1	120	35	0.3	1.08	3.09	99	1.7	10	-22/-30
F32T8	1	277	35	0.13	1.08	3.09	97	1.7	10	-22/-30
	2	120	53	0.44	.86	1.62	99	1.7	10	60/16
	2	277	51	0.19	.87	1.71	97	1.7	10	60/16
	1	120	33	0.28	1.05	3.18	99	1.7	10	60/16
F32T8/WM	1	277	33	0.12	1.05	3.18	96	1.7	10	60/16
	2	120	47	0.39	.83	1.77	99	1.7	10	60/16
	2	277	47	0.17	.83	1.77	97	1.7	10	60/16
	1	120	31	0.26	1.02	3.29	99	1.7	10	60/16
F28T8	1	277	31	0.11	.02	.06	95	1.7	10	60/16
	2	120	43	0.36	.83	1.93	99	1.7	10	60/16
	2	277	43	0.16	.83	1.93	97	1.7	10	60/16
	1	120	28	0.24	1.02	3.64	99	1.7	10	60/16
F32T8/25W	1	277	28	0.10	1.02	3.64	98	1.7	10	60/16
	2	120	44	0.37	.90	2.05	99	1.7	10	-22/-30
	2	277	44	0.16	.91	2.07	97	1.7	10	-22/-30
	1	120	28	0.23	1.08	3.86	99	1.7	10	-22/-30
F25T8	1	277	28	0.11	1.08	3.86	95	1.7	10	-22/-30
	2	120	31	0.26	.88	2.84	99	1.7	10	-22/-30
	2	277	31	0.12	.88	2.84	95	1.7	10	-22/-30
	1	120	20	0.17	1.05	5.25	99	1.7	10	-22/-30
F17T8	1	277	21	0.08	1.05	5.00	92	1.7	14	-22/-30
	1	120	44	0.37	1.08	2.45	99	1.7	10	0/-18
F40T8	1	277	43	0.16	1.08	2.51	96	1.7	10	0/-18

Safety and performance

UL Class P UL Type 1 Outdoor UL Type HL FCC – CLASS A Non-Consumer

Product is compliant with material restriction requirements of RoHS

See page E-1 for warranty information.

UltraMax® General Series T8 Multi-Voltage 120–277V
T8 Instant Start Ballasts For F17 (2 ft), F25 (3 ft), F32 (4 ft), F40 (5 ft) Lamps

74461 – GE332MAX-G-H (Replaces GE332MV-H)

UltraMax® G-Series T8 Multivolt 120V-277V

3 or 2 – F32T8 120 to 277 "H" 1.15 BF Multivolt UltraMax®G

- High-performance electronic ballast for all general fluorescent applications
- Instant start electronic ballast for long lamp starting cycles and low initial cost
- Multi-voltage technology handles voltage from 120 to 277V
- Parallel lamp operation means system maintenance is easier to manage
- Anti-striation control for better light quality
- Cold temperature -22°F Minimum Starting Temperature

General characteristics

Ballast Type	Electronic –Multivolt Instant Start
Starting Method	Instant start
Lamp Wiring	Parallel
Line Voltage Regulation(+/-)	10%
Ambient Temperature (MAX)	40°C (104°F)
Case Temperature (MAX)	70°C (158°F)
Ballast Factor	High
Power Factor Correction	Active
Sound Rating	A (20-24 decibels)
Enclosure Type	Metal
Additional Info	Anti-striation control, Auto-restart, Inherently Thermally Protected, UL Class P

Electrical characteristics

Supply Current Frequency	50 Hz/60 Hz

Order information

10 Pack	Pallet Pack	DIY Pack	IP Pack
74461	74462		

Dimensions

Wiring diagram – LFL 1C – see example on Page 10-61	
Case dimensions – Ref Drawing -A – see Page 10-62	
Length (L)	9.5 in (241 mm)
Width (W)	1.3 in (33 mm)
Height (H)	1.18 in (30 mm)
Mounting dimensions	
Mount Length (M)	8.9 in (226 mm)
Mount Width (X or F)	0.87 in (22 mm)
Mount Slots (MS)	0.3 in (8 mm)
Weight	1.40lbs
Exit Type	Side
Remote Mounting Distance to Lamp (F32T8)	18 ft
Remote Mounting Wire Gauge	18 AWG
Lead lengths	
Black	25 in (635 mm)
White	25 in (635 mm)
Blue	31 in (787 mm)
Red	45 in (1143 mm)

Specifications by lamp and wattage

Lamp	# of Lamps	Line Volts (V)	System Watts (W)	Nom. Line Current (A)	System Ballast Factor	Ballast Efficacy Factor	Power Factor% (>=)	Crest Factor (<=)	THD% (<=)	Min. Starting Temp (°F/°C)
	3	120	113	0.95	1.15	1.02	99	1.7	10	-22/-30
	3	277	110	0.41	1.15	1.05	98	1.7	10	-22/-30
	2	120	86	0.79	1.27	1.48	99	1.7	10	-22/-30
F32T8	2	277	85	0.34	1.27	1.49	97	1.7	10	-22/-30
	3	120	103	0.91	1.11	1.08	99	1.7	10	60/16
	3	277	101	0.39	1.11	1.10	98	1.7	10	60/16
	2	120	79	0.73	1.22	1.54	99	1.7	10	60/16
F32T8/WM	2	277	78	0.32	1.22	1.56	97	1.7	10	60/16
	3	120	94	0.84	1.10	1.17	99	1.7	10	60/16
	3	277	92	0.36	1.10	1.20	98	1.7	10	60/16
	2	120	72	0.67	1.20	1.67	99	1.7	10	60/16
F28T8	2	277	72	0.30	1.20	1.67	97	1.7	10	60/16
	3	120	89	0.75	1.07	1.20	99	1.7	10	60/16
	3	277	88	0.32	1.07	1.22	98	1.7	15	60/16
	2	120	68	0.57	1.20	1.76	99	1.7	10	60/16
F32T8/25W	2	277	69	0.26	1.20	1.74	97	1.7	18	60/16
	3	120	84	0.75	1.14	1.36	99	1.7	10	-22/-30
	3	277	83	0.33	1.14	1.37	97	1.7	10	-22/-30
	2	120	65	0.61	1.14	1.75	99	1.7	10	-22/-30
F25T8	2	277	65	0.26	1.14	1.75	97	1.7	10	-22/-30
	3	120	59	0.52	1.13	1.92	99	1.7	10	-22/-30
	3	277	59	0.24	1.13	1.92	96	1.7	10	-22/-30
	2	120	46	0.43	1.24	2.70	99	1.7	10	-22/-30
F17T8	2	277	46	0.20	1.24	2.70	95	1.7	10	-22/-30
	2	120	102	0.95			99	1.7	10	0/-18
F40T8	2	277	100	0.41			98	1.7	10	0/-18

Safety and performance

UL Class P · UL Type 1 Outdoor · UL Type HL · FCC – CLASS A Non-Consumer

Product is compliant with material restriction requirements of RoHS

See page E-1 for warranty information.

UltraMax® General Series T8 Multi-Voltage 120–277V
T8 Instant Start Ballasts For F17 (2 ft), F25 (3 ft), F32 (4 ft), F40 (5 ft) Lamps

74459 – GE332MAX-G-L (Replaces GE332MV-L)

UltraMax® G-Series T8 Multivolt 120V-277V

3 or 2 – F32T8 120 to 277 "L" .77 BF Multivolt UltraMax®G

- High-performance electronic ballast for all general fluorescent applications
- Instant start electronic ballast for long lamp starting cycles and low initial cost
- Multi-voltage technology handles voltage from 120 to 277V
- Parallel lamp operation means system maintenance is easier to manage
- Anti-striation control for better light quality
- Cold temperature -22°F Minimum Starting Temperature

General characteristics

Ballast Type	Electronic –Multivolt Instant Start
Starting Method	Instant start
Lamp Wiring	Parallel
Line Voltage Regulation(+/-)	10%
Ambient Temperature (MAX)	40°C (104°F)
Case Temperature (MAX)	70°C (158°F)
Ballast Factor	Low
Power Factor Correction	Active
Sound Rating	A (20-24 decibels)
Enclosure Type	Metal
Additional Info	Anti-striation control, Auto-restart, Inherently Thermally Protected, UL Class P

Electrical characteristics

Supply Current Frequency	50 Hz/60 Hz

Order information

10 Pack	Pallet Pack	DIY Pack	IP Pack
74459			

Dimensions

Wiring diagram – LFL 1C – see example on Page 10-61	
Case dimensions – Ref Drawing -A – see Page 10-62	
Length (L)	9.5 in (241 mm)
Width (W)	1.3 in (33 mm)
Height (H)	1.18 in (30 mm)
Mounting dimensions	
Mount Length (M)	8.9 in (226 mm)
Mount Width (X or F)	0.87 in (22 mm)
Mount Slots (MS)	0.3 in (8 mm)
Weight	1.40lbs
Exit Type	Side
Remote Mounting Distance to Lamp (F32T8)	18 ft
Remote Mounting Wire Gauge	18 AWG
Lead lengths	
Black	25 in (635 mm)
White	25 in (635 mm)
Blue	31 in (787 mm)
Red	45 in (1143 mm)

Specifications by lamp and wattage

Lamp	# of Lamps	Line Volts (V)	System Watts (W)	Nom. Line Current (A)	System Ballast Factor	Ballast Efficacy Factor	Power Factor% (>=)	Crest Factor (<=)	THD% (<=)	Min. Starting Temp (°F/°C)
	3	120	74	0.70	.78	1.05	99	1.7	10	-22/-30
	3	277	73	0.31	.78	1.07	98	1.7	10	-22/-30
	2	120	60	0.55	.87	1.45	99	1.7	10	-22/-30
F32T8	2	277	59	0.24	.87	1.47	97	1.7	10	-22/-30
	3	120	69	0.62	.75	1.09	99	1.7	10	60/16
	3	277	68	0.27	.75	1.10	98	1.7	10	60/16
	2	120	55	0.50	.83	1.51	99	1.7	10	60/16
F32T8/WM	2	277	55	0.22	.83	1.51	97	1.7	10	60/16
	3	120	63	0.57	.75	1.19	99	1.7	10	60/16
	3	277	63	0.25	.75	1.19	98	1.7	10	60/16
	2	120	50	0.46	.83	1.66	99	1.7	10	60/16
F28T8	2	277	50	0.20	.83	1.66	97	1.7	10	60/16
	3	120	59	0.50	.74	1.25	99	1.7	10	60/16
	3	277	59	0.22	.74	1.25	98	1.7	15	60/16
	2	120	46	0.39	.83	1.80	99	1.7	10	60/16
F32T8/25W	2	277	47	0.17	.83	1.77	97	1.7	18	60/16
	3	120	58	0.52	.77	1.33	99	1.7	10	-22/-30
	3	277	58	0.23	.77	1.33	97	1.7	10	-22/-30
	2	120	45	0.42	.86	1.91	99	1.7	10	-22/-30
F25T8	2	277	45	0.19	.86	1.91	96	1.7	10	-22/-30
	3	120	41	0.36	.77	1.88	99	1.7	10	-22/-30
	3	277	41	0.16	.77	1.88	96	1.7	10	-22/-30
	2	120	32	0.30	.85	2.66	99	1.7	10	-22/-30
F17T8	2	277	33	0.14	.85	2.58	95	1.7	10	-22/-30
	2	120	69	0.63			99	1.7	10	0/-18
F40T8	2	277	68	0.27			98	1.7	10	0/-18

Safety and performance

UL Class P UL Type 1 Outdoor UL Type HL FCC – CLASS A Non-Consumer

Product is compliant with material restriction requirements of RoHS

See page E-1 for warranty information.

UltraMax® General Series T8 Multi-Voltage 120–277V

T8 Instant Start Ballasts For F17 (2 ft), F25 (3 ft), F32 (4 ft), F40 (5 ft) Lamps

74456 – GE332MAX-G-N (Replaces GE332MV-N)

UltraMax® G-Series T8 Multivolt 120V-277V

3 or 2 – F32T8 120 to 277 "N" .87 BF Multivolt UltraMax®G

- High-performance electronic ballast for all general fluorescent applications
- Instant start electronic ballast for long lamp starting cycles and low initial cost
- Multi-voltage technology handles voltage from 120 to 277V
- Parallel lamp operation means system maintenance is easier to manage
- Anti-striation control for better light quality
- Cold temperature -22°F Minimum Starting Temperature

General characteristics

Ballast Type	Electronic –Multivolt Instant Start
Starting Method	Instant start
Lamp Wiring	Parallel
Line Voltage Regulation(+/-)	10%
Ambient Temperature (MAX)	40°C (104°F)
Case Temperature (MAX)	70°C (158°F)
Ballast Factor	Normal
Power Factor Correction	Active
Sound Rating	A (20-24 decibels)
Enclosure Type	Metal
Additional Info	Anti-striation control, Auto-restart, Inherently Thermally Protected, UL Class P

Electrical characteristics

Supply Current Frequency	50 Hz/60 Hz

Order information

10 Pack	Pallet Pack	DIY Pack	IP Pack
74456	74457	93869	

Dimensions

Wiring diagram – LFL 1C – see example on Page 10-61	
Case dimensions – Ref Drawing -A – see Page 10-62	
Length (L)	9.5 in (241 mm)
Width (W)	1.3 in (33 mm)
Height (H)	1.18 in (30 mm)
Mounting dimensions	
Mount Length (M)	8.9 in (226 mm)
Mount Width (X or F)	0.87 in (22 mm)
Mount Slots (MS)	0.3 in (8 mm)
Weight	1.40lbs
Exit Type	Side
Remote Mounting Distance to Lamp (F32T8)	18 ft
Remote Mounting Wire Gauge	18 AWG
Lead lengths	
Black	25 in (635 mm)
White	25 in (635 mm)
Blue	31 in (787 mm)
Red	45 in (1143 mm)

Specifications by lamp and wattage

Lamp	# of Lamps	Line Volts (V)	System Watts (W)	Nom. Line Current (A)	System Ballast Factor	Ballast Efficacy Factor	Power Factor% (>=)	Crest Factor (<=)	THD% (<=)	Min. Starting Temp (°F/°C)
	3	120	81	0.73	.87	1.07	99	1.7	10	-22/-30
	3	277	80	0.32	.87	1.09	98	1.7	10	-22/-30
	2	120	62	0.56	.96	1.55	99	1.7	10	-22/-30
F32T8	2	277	62	0.26	.96	1.55	98	1.7	10	-22/-30
	3	120	75	0.68	.83	1.11	99	1.7	10	60/16
	3	277	74	0.30	.83	1.12	98	1.7	10	60/16
	2	120	58	0.52	.92	1.59	99	1.7	10	60/16
F32T8/WM	2	277	57	0.23	.92	1.61	98	1.7	10	60/16
	3	120	67	0.60	.82	1.22	99	1.7	10	60/16
	3	277	66	0.26	.82	1.24	98	1.7	10	60/16
	2	120	52	0.46	.87	1.67	99	1.7	10	60/16
F28T8	2	277	51	0.29	.87	1.71	97	1.7	10	60/16
	3	120	66	0.56	.80	1.21	99	1.7	10	60/16
	3	277	65	0.24	.80	1.23	98	1.7	13	60/16
	2	120	51	0.43	.87	1.71	99	1.7	10	60/16
F32T8/25W	2	277	50	0.19	.87	1.74	97	1.7	18	60/16
	3	120	63	0.57	.86	1.37	99	1.7	10	-22/-30
	3	277	62	0.25	.86	1.39	98	1.7	10	-22/-30
	2	120	48	0.43	.94	1.96	99	1.7	10	-22/-30
F25T8	2	277	48	0.19	.94	1.96	97	1.7	10	-22/-30
	3	120	45	0.40	.86	1.91	99	1.7	10	-22/-30
	3	277	44	0.18	.86	1.95	97	1.7	10	-22/-30
	2	120	34	0.30	.92	2.71	99	1.7	10	-22/-30
F17T8	2	277	35	0.15	.92	2.63	96	1.7	10	-22/-30
	2	120	75	0.67			99	1.7	10	0/-18
F40T8	2	277	73	0.29			98	1.7	10	0/-18

Safety and performance

c UL us LISTED; UL Class P; UL Type 1 Outdoor; UL Type HL; FCC – CLASS A Non-Consumer

NEMA Premium; Product is compliant with material restriction requirements of RoHS

See page E-1 for warranty information.

UltraMax® General-Series T8 Multi-Voltage 120–277V
T8 Instant Start Ballasts For F17 (2 ft), F25 (3 ft), F32 (4 ft), F40 (5 ft) Lamps

67911 – GE432MAX-G-H (Replaces GE432MAXA-H)

UltraMax® G-Series T8 Multivolt 120V-277V

4 or 3 – F32T8 120 to 277 "H" 1.18 BF Multivolt UltraMax®G

- High-performance electronic ballast for all general fluorescent applications
- Instant start electronic ballast for long lamp starting cycles and low initial cost
- Multi-voltage technology handles voltage from 120 to 277V
- Parallel lamp operation means system maintenance is easier to manage
- Anti-striation control for better light quality
- Cold temperature -22°F Minimum Starting Temperature

General characteristics

Ballast Type	Electronic –Multivolt Instant Start
Starting Method	Instant start
Lamp Wiring	Parallel
Line Voltage Regulation(+/-)	10%
Ambient Temperature (MAX)	40°C (104°F)
Case Temperature (MAX)	70°C (158°F)
Ballast Factor	High
Power Factor Correction	Active
Sound Rating	A (20-24 decibels)
Enclosure Type	Metal
Additional Info	Anti-striation control, Auto-restart, Inherently Thermally Protected, UL Class P

Electrical characteristics

Supply Current Frequency	50 Hz/60 Hz

Order information

10 Pack	Pallet Pack	DIY Pack	IP Pack
67911			

Dimensions

Wiring diagram – LFL 1D – see example on Page 10-61	
Case dimensions – Ref Drawing -A – see Page 10-62	
Length (L)	9.5 in (241 mm)
Width (W)	1.7 in (43 mm)
Height (H)	1.18 in (30 mm)
Mounting dimensions	
Mount Length (M)	8.9 in (226 mm)
Mount Width (X or F)	1.05 in (27 mm)
Mount Slots (MS)	0.3 in (8 mm)
Weight	1.40lbs
Exit Type	Side
Remote Mounting Distance to Lamp (F32T8)	18 ft
Remote Mounting Wire Gauge	18 AWG
Lead lengths	
Black	25 in (635 mm)
White	25 in (635 mm)
Red & Blue	31 in (787 mm)
Yellow	47 in (1194 mm)

Specifications by lamp and wattage

Lamp	# of Lamps	Line Volts (V)	System Watts (W)	Nom. Line Current (A)	System Ballast Factor	Ballast Efficacy Factor	Power Factor% (>=)	Crest Factor (<=)	THD% (<=)	Min. Starting Temp (°F/°C)
	4	120	146	1.23	1.18	.81	99	1.7	10	-22/-30
	4	277	143	0.53	1.18	.83	98	1.7	10	-22/-30
	3	120	115	0.96	1.24	1.08	99	1.7	10	-22/-30
F32T8	3	277	113	0.42	1.24	1.10	98	1.7	10	-22/-30
	4	120	130	1.09	1.13	.87	99	1.7	10	60/16
	4	277	128	0.47	1.13	.88	98	1.7	10	60/16
	3	120	107	0.90	1.22	1.14	99	1.7	10	60/16
F32T8/WM	3	277	106	0.39	1.22	1.15	97	1.7	10	60/16
	4	120	123	1.03	1.10	.89	99	1.7	10	60/16
	4	277	121	0.44	1.11	.92	98	1.7	10	60/16
	3	120	101	0.85	1.20	1.19	99	1.7	10	60/16
F28T8	3	277	100	0.37	1.20	1.20	97	1.7	10	60/16
	4	120	123	1.03	1.11	.90	99	1.7	10	60/16
	4	277	121	0.44	1.11	.92	98	1.7	10	60/16
	3	120	101	0.85	1.22	1.21	99	1.7	10	60/16
F32T8/25W	3	277	100	0.37	1.22	1.22	97	1.7	10	60/16
	4	120	107	0.89	1.17	1.09	99	1.7	10	0/-18
	4	277	105	0.39	1.17	1.11	98	1.7	10	0/-18
	3	120	88	0.76	1.25	1.42	99	1.7	10	0/-18
F25T8	3	277	88	0.37	1.25	1.42	97	1.7	10	0/-18
	4	120	76	0.64	1.13	1.49	99	1.7	10	0/-18
	4	277	76	0.28	1.13	1.49	97	1.7	10	0/-18
	3	120	63	0.53	1.25	1.98	99	1.7	10	0/-18
F17T8	3	277	64	0.24	1.25	1.95	96	1.7	10	0/-18
	3	120	144	1.20			99	1.7	10	0/-18
F40T8	3	277	141	0.52			98	1.7	10	0/-18

Safety and performance

UL Class P UL Type 1 Outdoor UL Type HL FCC – CLASS A Non-Consumer

Product is compliant with material restriction requirements of RoHS

See page E-1 for warranty information.

UltraMax® General Series T8 Multi-Voltage 120–277V
T8 Instant Start Ballasts For F17 (2 ft), F25 (3 ft), F32 (4 ft), F40 (5 ft) Lamps

74466 – GE432MAX-G-L (Replaces GE432MV-L)

UltraMax® G-Series T8 Multivolt 120V-277V

4 or 3 – F32T8 120 to 277 "L" .77 BF Multivolt UltraMax®G

- High-performance electronic ballast for all general fluorescent applications
- Instant start electronic ballast for long lamp starting cycles and low initial cost
- Multi-voltage technology handles voltage from 120 to 277V
- Parallel lamp operation means system maintenance is easier to manage
- Anti-striation control for better light quality
- Cold temperature -22°F Minimum Starting Temperature

General characteristics

Ballast Type	Electronic –Multivolt Instant Start
Starting Method	Instant start
Lamp Wiring	Parallel
Line Voltage Regulation(+/-)	10%
Ambient Temperature (MAX)	40°C (104°F)
Case Temperature (MAX)	70°C (158°F)
Ballast Factor	Low
Power Factor Correction	Active
Sound Rating	A (20-24 decibels)
Enclosure Type	Metal
Additional Info	Anti-striation control, Auto-restart, Inherently Thermally Protected, UL Class P

Electrical characteristics

Supply Current Frequency	50 Hz/60 Hz

Order information

10 Pack	Pallet Pack	DIY Pack	IP Pack
74466			

Dimensions

Wiring diagram – LFL 1D – see example on Page 10-61	
Case dimensions – Ref Drawing -A – see Page 10-62	
Length (L)	9.5 in (241 mm)
Width (W)	1.3 in (33 mm)
Height (H)	1.18 in (30 mm)
Mounting dimensions	
Mount Length (M)	8.9 in (226 mm)
Mount Width (X or F)	0.87 in (22 mm)
Mount Slots (MS)	0.3 in (8 mm)
Weight	1.40lbs
Exit Type	Side
Remote Mounting Distance to Lamp (F32T8)	18 ft
Remote Mounting Wire Gauge	18 AWG
Lead lengths	
Black	25 in (635 mm)
White	25 in (635 mm)
Red & Blue	31 in (787 mm)
Yellow	47 in (1194 mm)

Specifications by lamp and wattage

Lamp	# of Lamps	Line Volts (V)	System Watts (W)	Nom. Line Current (A)	System Ballast Factor	Ballast Efficacy Factor	Power Factor% (>=)	Crest Factor (<=)	THD% (<=)	Min. Starting Temp (°F/°C)
	4	120	100	0.95	.80	.80	99	1.7	10	-22/-30
	4	277	98	0.41	.80	.82	98	1.7	10	-22/-30
	3	120	87	0.80	.87	1.00	99	1.7	10	-22/-30
F32T8	3	277	86	0.35	.87	1.01	97	1.7	10	-22/-30
	4	120	95	0.84	.76	.80	99	1.7	10	60/16
	4	277	93	0.36	.76	.82	98	1.7	10	60/16
	3	120	79	0.73	.83	1.05	99	1.7	10	60/16
F32T8/WM	3	277	78	0.32	.83	1.06	97	1.7	10	60/16
	4	120	86	0.77	.75	.87	99	1.7	10	60/16
	4	277	85	0.33	.70	.82	97	1.7	10	60/16
	3	120	73	0.67	.79	1.08	99	1.7	10	60/16
F28T8	3	277	72	0.29	.79	1.10	97	1.7	10	60/16
	4	120	77	0.65	.70	.91	99	1.7	10	60/16
	4	277	77	0.28	.73	.95	98	1.7	15	60/16
	3	120	65	0.55	.79	1.22	99	1.7	10	60/16
F32T8/25W	3	277	65	0.24	.79	1.22	97	1.7	18	60/16
	4	120	78	0.69	.80	1.03	99	1.7	10	-22/-30
	4	277	77	0.31	.80	1.04	97	1.7	10	-22/-30
	3	120	66	0.61	.86	1.30	99	1.7	10	-22/-30
F25T8	3	277	65	0.27	.86	1.32	97	1.7	10	-22/-30
	4	120	55	0.49	.79	1.44	99	1.7	10	-22/-30
	4	277	55	0.23	.79	1.44	96	1.7	10	-22/-30
	3	120	46	0.43	.85	1.85	99	1.7	10	-22/-30
F17T8	3	277	46	0.19	.85	1.85	95	1.7	10	-22/-30
	3	120	102	0.94			99	1.7	10	0/-18
F40T8	3	277	100	0.41			97	1.7	10	0/-18

Safety and performance

UL Class P UL Type 1 Outdoor UL Type HL FCC – CLASS A Non-Consumer

Product is compliant with material restriction requirements of RoHS

See page E-1 for warranty information.

UltraMax® General Series T8 Multi-Voltage 120–277V
T8 Instant Start Ballasts For F17 (2 ft), F25 (3 ft), F32 (4 ft), F40 (5 ft) Lamps

74463 – GE432MAX-G-N (Replaces GE432MV-N)

UltraMax® G-Series T8 Multivolt 120V-277V

4 or 3 – F32T8 120 to 277 "N" .87 BF Multivolt UltraMax®G

- High-performance electronic ballast for all general fluorescent applications
- Instant start electronic ballast for long lamp starting cycles and low initial cost
- Multi-voltage technology handles voltage from 120 to 277V
- Parallel lamp operation means system maintenance is easier to manage
- Anti-striation control for better light quality
- Cold temperature -22°F Minimum Starting Temperature

General characteristics

Ballast Type	Electronic –Multivolt Instant Start
Starting Method	Instant start
Lamp Wiring	Parallel
Line Voltage Regulation(+/-)	10%
Ambient Temperature (MAX)	40°C (104°F)
Case Temperature (MAX)	70°C (158°F)
Ballast Factor	Normal
Power Factor Correction	Active
Sound Rating	A (20-24 decibels)
Enclosure Type	Metal
Additional Info	Anti-striation control, Auto-restart, Inherently Thermally Protected, UL Class P

Electrical characteristics

Supply Current Frequency	50 Hz/60 Hz

Order information

10 Pack	Pallet Pack	DIY Pack	IP Pack
74463	74464	93868	

Dimensions

Wiring diagram – LFL 1D – see example on Page 10-61	
Case dimensions – Ref Drawing -A – see Page 10-62	
Length (L)	9.5 in (241 mm)
Width (W)	1.3 in (33 mm)
Height (H)	1.18 in (30 mm)
Mounting dimensions	
Mount Length (M)	8.9 in (226 mm)
Mount Width (X or F)	0.87 in (22 mm)
Mount Slots (MS)	0.3 in (8 mm)
Weight	1.40lbs
Exit Type	Side
Remote Mounting Distance to Lamp (F32T8)	18 ft
Remote Mounting Wire Gauge	18 AWG
Lead lengths	
Black	25 in (635 mm)
White	25 in (635 mm)
Red & Blue	31 in (787 mm)
Yellow	47 in (1194 mm)

Specifications by lamp and wattage

Lamp	# of Lamps	Line Volts (V)	System Watts (W)	Nom. Line Current (A)	System Ballast Factor	Ballast Efficacy Factor	Power Factor% (>=)	Crest Factor (<=)	THD% (<=)	Min. Starting Temp (°F/°C)
	4	120	113	0.99	.88	.78	99	1.7	10	-22/-30
	4	277	110	0.43	.88	.80	98	1.7	10	-22/-30
	3	120	93	0.83	.93	1.00	99	1.7	10	-22/-30
F32T8	3	277	92	0.36	.93	1.01	98	1.7	10	-22/-30
	4	120	103	0.90	.83	.81	99	1.7	10	60/16
	4	277	103	0.40	.83	.81	98	1.7	10	60/16
	3	120	87	0.77	.91	1.05	99	1.7	10	60/16
F32T8/WM	3	277	86	0.33	.91	1.06	98	1.7	10	60/16
	4	120	93	0.83	.82	.88	99	1.7	10	60/16
	4	277	92	0.36	.82	.89	98	1.7	10	60/16
	3	120	77	0.68	.85	1.10	99	1.7	10	60/16
F28T8	3	277	77	0.30	.85	1.10	98	1.7	10	60/16
	4	120	88	0.74	.80	.91	99	1.7	10	60/16
	4	277	87	0.32	.80	.92	98	1.7	15	60/16
	3	120	73	0.61	.85	1.16	99	1.7	10	60/16
F32T8/25W	3	277	73	0.27	.85	1.16	97	1.7	16	60/16
	4	120	88	0.77	.87	.99	99	1.7	10	-22/-30
	4	277	86	0.34	.87	1.01	98	1.7	10	-22/-30
	3	120	73	0.64	.93	1.27	99	1.7	10	-22/-30
F25T8	3	277	72	0.28	.93	1.29	98	1.7	10	-22/-30
	4	120	60	0.53	.87	1.45	99	1.7	10	-22/-30
	4	277	60	0.23	.87	1.45	97	1.7	10	-22/-30
	3	120	51	0.45	.91	1.78	99	1.7	10	-22/-30
F17T8	3	277	51	0.20	.91	1.78	97	1.7	10	-22/-30
	3	120	112	0.99			99	1.7	10	0/-18
F40T8	3	277	110	0.43			98	1.7	10	0/-18

Safety and performance

UL Class P UL Type 1 Outdoor UL Type HL FCC – CLASS A Non-Consumer

Product is compliant with material restriction requirements of RoHS

See page E-1 for warranty information.

UltraMax® General Series T8 Multi-Voltage 120–277V
T8 Instant Start Ballasts For 46-59W 4ft-8ft Slimline Lamps

72271 – GE159MAX-G-N (Replaces GE-159-MV-N)

UltraMax® G-Series T8 Multivolt 120V-277V

1 – F96T8 120 to 277 "N" 0.87 BF UltraMax®G

- High-performance electronic ballast for all general fluorescent applications
- Instant start electronic ballast for long lamp starting cycles and low initial cost
- Multi-voltage technology handles voltage from 120 to 277V
- Cold temperature 0°F Minimum Starting Temperature

General characteristics

Ballast Type	Electronic –Multivolt Instant Start
Starting Method	Instant start
Lamp Wiring	
Line Voltage Regulation(+/-)	10%
Ambient Temperature (MAX)	40°C (104°F)
Case Temperature (MAX)	70°C (158°F)
Ballast Factor	Normal
Power Factor Correction	Active
Sound Rating	A (20-24 decibels)
Enclosure Type	Metal
Additional Info	Auto-restart, Inherently Thermally Protected, UL Class P

Electrical characteristics

Supply Current Frequency	50 Hz/60 Hz

Order information

10 Pack	Pallet Pack	DIY Pack	IP Pack
72271	72272		

Dimensions

Wiring diagram – LFL 1A – see example on Page 10-61	
Case dimensions – Ref Drawing -A – see Page 10-62	
Length (L)	9.5 in (241 mm)
Width (W)	1.3 in (33 mm)
Height (H)	1.18 in (30 mm)
Mounting dimensions	
Mount Length (M)	8.9 in (226 mm)
Mount Width (X or F)	0.87 in (22 mm)
Mount Slots (MS)	0.3 in (8 mm)
Weight	1.06lbs
Exit Type	Side
Remote Mounting Distance to Lamp (F32T8)	18 ft
Remote Mounting Wire Gauge	18 AWG
Lead lengths	
Black	22 in (559 mm)
White	22 in (559 mm)
Blue	46 in (1168 mm)
Red	78 in (1981 mm)

Specifications by lamp and wattage

Lamp	# of Lamps	Line Volts (V)	System Watts (W)	Nom. Line Current (A)	System Ballast Factor	Ballast Efficacy Factor	Power Factor% (>=)	Crest Factor (<=)	THD% (<=)	Min. Starting Temp (°F/°C)
F96T8	1	120	60	0.55	.89	1.48	99	1.7	10	0/-18
	1	277	59	0.22	.89	1.51	96	1.7	18	0/-18
F96T8/WM	1	120	56	0.51	.85	1.52	99	1.7	10	50/10
	1	277	54	0.22	.85	1.57	96	1.7	18	50/10
F96T8/WMP	1	120	52	0.43	.80	1.54	99	1.7	10	50/10
	1	277	51	0.19	.80	1.57	96	1.7	18	50/10

Safety and performance

UL Class P UL Type 1 Outdoor UL Type HL FCC – CLASS A Non-Consumer Product is compliant with material restriction requirements of RoHS

See page E-1 for warranty information.

UltraMax® General Series T8 Multi-Voltage 120–277V
T8 Instant Start Ballasts For 46-59W 4ft-8ft Slimline Lamps

74469 – GE259MAX-G-N (Replaces GE259MV-N)

UltraMax® G-Series T8 Multivolt 120V-277V

2 or 1 – F96T8 120 to 277 "N" 0.87 BF UltraMax®G

- High-performance electronic ballast for all general fluorescent applications
- Instant start electronic ballast for long lamp starting cycles and low initial cost
- Multi-voltage technology handles voltage from 120 to 277V
- Parallel lamp operation means system maintenance is easier to manage
- Cold temperature 0°F Minimum Starting Temperature

General characteristics

Ballast Type	Electronic –Multivolt Instant Start
Starting Method	Instant start
Lamp Wiring	Parallel
Line Voltage Regulation(+/-)	10%
Ambient Temperature (MAX)	40°C (104°F)
Case Temperature (MAX)	70°C (158°F)
Ballast Factor	Normal
Power Factor Correction	Active
Sound Rating	A (20-24 decibels)
Enclosure Type	Metal
Additional Info	Auto-restart, Inherently Thermally Protected, UL Class P

Electrical characteristics

Supply Current Frequency	50 Hz/60 Hz

Order information

10 Pack	Pallet Pack	DIY Pack	IP Pack
74469	74470	93879	

Dimensions

Wiring diagram – LFL 1B – see example on Page 10-61	
Case dimensions – Ref Drawing -A – see Page 10-62	
Length (L)	9.5 in (241 mm)
Width (W)	1.3 in (33 mm)
Height (H)	1.18 in (30 mm)
Mounting dimensions	
Mount Length (M)	8.9 in (226 mm)
Mount Width (X or F)	0.87 in (22 mm)
Mount Slots (MS)	0.3 in (8 mm)
Weight	1.40lbs
Exit Type	Side
Remote Mounting Distance to Lamp (F32T8)	18 ft
Remote Mounting Wire Gauge	18 AWG
Lead lengths	
Black	22 in (559 mm)
White	22 in (559 mm)
Blue	46 in (1168 mm)
Red	78 in (1981 mm)

Specifications by lamp and wattage

Lamp	# of Lamps	Line Volts (V)	System Watts (W)	Nom. Line Current (A)	System Ballast Factor	Ballast Efficacy Factor	Power Factor% (>=)	Crest Factor (<=)	THD% (<=)	Min. Starting Temp (°F/°C)
	2	120	113	1.01	.88	.78	99	1.7	10	0/-18
	2	277	110	0.4	.88	.80	98	1.7	10	0/-18
	1	120	72	0.66	.88	1.22	99	1.7	10	0/-18
F96T8	1	277	72	0.29	.88	1.22	97	1.7	10	0/-18
	2	120	104	0.93	.86	.83	99	1.7	10	60/16
	2	277	101	0.42	.86	.85	98	1.7	10	60/16
	1	120	67	0.63	1.02	1.52	99	1.7	10	60/16
F96T8/WM	1	277	66	0.28	1.02	1.55	97	1.7	10	60/16

Safety and performance

c UL us LISTED — UL Class P — UL Type 1 Outdoor — UL Type HL — FCC – CLASS A Non-Consumer — Product is compliant with material restriction requirements of RoHS

See page E-1 for warranty information.

UltraMax® General Series 347V Instant Start High Performance
T8 Instant Start Ballasts

74101 – GE132MAX-G-347 (Replaces GE132-N-347)

UltraMax® G-Series 347V Instant Start High-Efficiency

1 – F32T8 347V "N" 0.87 BF UltraMax®G

- High-performance electronic ballast for all general fluorescent applications
- Instant start electronic ballast for long lamp starting cycles and low initial cost
- Light-weight, Slim Profile Mini Can Housing
- Parallel lamp operation means system maintenance is easier to manage
- Cold temperature 0°F Minimum Starting Temperature

General characteristics

Ballast Type	Electronic – High-Efficiency Instant Start
Starting Method	Instant start
Lamp Wiring	
Line Voltage Regulation(+/-)	10%
Ambient Temperature (MAX)	40°C (104°F)
Case Temperature (MAX)	70°C (158°F)
Ballast Factor	Normal
Power Factor Correction	Active
Sound Rating	A (20-24 decibels)
Enclosure Type	Metal
Additional Info	Auto-restart, Inherently Thermally Protected, UL Class P

Electrical characteristics

Supply Current Frequency	60 Hz

Order information

10 Pack	Pallet Pack	DIY Pack	IP Pack
74101			

Dimensions

Wiring diagram – LFL 1A – see example on Page 10-61	
Case dimensions – Ref Drawing -A – see Page 10-62	
Length (L)	9.5 in (241 mm)
Width (W)	1.3 in (33 mm)
Height (H)	1.18 in (30 mm)
Mounting dimensions	
Mount Length (M)	8.9 in (226 mm)
Mount Width (X or F)	0.87 in (22 mm)
Mount Slots (MS)	0.3 in (8 mm)
Weight	1.04lbs
Exit Type	Side
Remote Mounting Distance to Lamp (F32T8)	18 ft
Remote Mounting Wire Gauge	18 AWG
Lead lengths	
Black	25 in (635 mm)
White	25 in (635 mm)
Blue	31 in (787 mm)
Red	45 in (1143 mm)

Specifications by lamp and wattage

Lamp	# of Lamps	Line Volts (V)	System Watts (W)	Nom. Line Current (A)	System Ballast Factor	Ballast Efficacy Factor	Power Factor% (>=)	Crest Factor (<=)	THD% (<=)	Min. Starting Temp (°F/°C)
F32T8	1	347	30	0.09	.87	2.91	97	1.7	10	0/-18
F32T8/WM	1	347	28	0.08	.86	3.10	96	1.7	10	0/-18
F28T8	1	347	26	0.08	.84	3.26	96	1.7	10	0/-18
F32T8/25W	1	347	24	0.07	.84	3.50	96	1.7	10	0/-18
F25T8	1	347	23	0.07	.88	3.83	95	1.7	10	0/-18
F25T8/WM	1	347	20	0.07	.88	4.40	95	1.7	10	0/-18
F17T8	1	347	17	0.06	.81	4.76	87	1.7	17	0/-18
FE15T8	1	347	14	0.05	.75	5.36	81	1.7	20	0/-18
F25T12	1	347	24	0.07	.88	3.67	95	1.7	10	0/-18

Safety and performance

c UL us LISTED UL Class P UL Type 1 Outdoor UL Type HL ICES-005 for EMI and RFI FCC – CLASS A Non-Consumer

ANSI - C82.11 - Cons 2002, ANSI - C62.41 - 1991 Product is compliant with material restriction requirements of RoHS

UltraMax® General Series 347V Instant Start High Performance
T8 Instant Start Ballasts

74103 – GE232MAX-G-347 (Replaces GE232-N-347)

UltraMax® G-Series 347V Instant Start High-Efficiency

2 or 1– F32T8 347V "N" 0.87 BF UltraMax®G

- High-performance electronic ballast for all general fluorescent applications
- Instant start electronic ballast for long lamp starting cycles and low initial cost
- Light-weight, Slim Profile Mini Can Housing
- Parallel lamp operation means system maintenance is easier to manage
- Cold temperature 0°F Minimum Starting Temperature

General characteristics

Ballast Type	Electronic – High-Efficiency Instant Start
Starting Method	Instant start
Lamp Wiring	Parallel
Line Voltage Regulation(+/-)	10%
Ambient Temperature (MAX)	40°C (104°F)
Case Temperature (MAX)	70°C (158°F)
Ballast Factor	Normal
Power Factor Correction	Active
Sound Rating	A (20-24 decibels)
Enclosure Type	Metal
Additional Info	Auto-restart, Inherently Thermally Protected, UL Class P

Electrical characteristics

Supply Current Frequency	60 Hz

Order information

10 Pack	Pallet Pack	DIY Pack	IP Pack
74103			

Dimensions

Wiring diagram – LFL 1B – see example on Page 10-61	
Case dimensions – Ref Drawing -A – see Page 10-62	
Length (L)	9.5 in (241 mm)
Width (W)	1.3 in (33 mm)
Height (H)	1.18 in (30 mm)
Mounting dimensions	
Mount Length (M)	8.9 in (226 mm)
Mount Width (X or F)	0.87 in (22 mm)
Mount Slots (MS)	0.3 in (8 mm)
Weight	1.04lbs
Exit Type	Side
Remote Mounting Distance to Lamp (F32T8)	18 ft
Remote Mounting Wire Gauge	18 AWG
Lead lengths	
Black	25 in (635 mm)
White	25 in (635 mm)
Blue	31 in (787 mm)
Red	45 in (1143 mm)

Specifications by lamp and wattage

Lamp	# of Lamps	Line Volts (V)	System Watts (W)	Nom. Line Current (A)	System Ballast Factor	Ballast Efficacy Factor	Power Factor% (>=)	Crest Factor (<=)	THD% (<=)	Min. Starting Temp (°F/°C)
	2	347	55	0.16	0.87	1.58	99	1.7	10	0/-18
F32T8	1	347	34	0.11	1.03	3.03	97	1.7	10	0/-18
	2	347	52	0.15	0.85	1.63	99	1.7	10	60/16
F32T8/WM	1	347	32	0.09	1.01	3.16	97	1.7	10	60/16
	2	347	48	0.14	0.84	1.75	99	1.7	10	60/16
F28T8	1	347	30	0.09	1.00	3.33	96	1.7	10	60/16
F32T8/25W	2	347	44	0.13	0.84	1.91	99	1.7	10	60/16
	2	347	41	0.12	0.88	2.15	98	1.7	10	0/-18
F25T8	1	347	26	0.08	1.04	4.00	95	1.7	11	0/-18
F25T8/WM	2	347	35	0.11	0.88	2.51	98	1.7	10	60/16
	2	347	29	0.09	0.83	2.86	96	1.7	10	0/-18
F17T8	1	347	19	0.07	0.99	5.21	84	1.7	50	0/-18
F17T8/WM	2	347	24	0.08	0.83	3.46	96	1.7	10	60/16
	2	347	24	0.08	0.76	3.17	90	1.7	30	0/-18
FE15T8	1	347	16	0.06	0.89	5.56	78	1.7	66	0/-18
	2	347	44	0.13	0.88	2.00	98	1.7	10	0/-18
F25T12	1	347	28	0.08	1.07	3.82	96	1.7	10	0/-18

Safety and performance

UL Class P UL Type 1 Outdoor UL Type HL ICES-005 for EMI and RFI FCC – CLASS A Non-Consumer

ANSI - C82.11 - Cons 2002, ANSI - C62.41 - 1991 Product is compliant with material restriction requirements of RoHS

See page E-1 for warranty information.

UltraMax® General Series 347V Instant Start High Performance
T8 Instant Start Ballasts

74105 – GE332MAX-G-347 (Replaces GE332-N-347)

UltraMax® G-Series 347V Instant Start High-Efficiency

3 or 2– F32T8 347V "N" 0.87 BF UltraMax®G

- High-performance electronic ballast for all general fluorescent applications
- Instant start electronic ballast for long lamp starting cycles and low initial cost
- Light-weight, Slim Profile Mini Can Housing
- Parallel lamp operation means system maintenance is easier to manage
- Cold temperature 0°F Minimum Starting Temperature

General characteristics

Ballast Type	Electronic – High-Efficiency Instant Start
Starting Method	Instant start
Lamp Wiring	Parallel
Line Voltage Regulation(+/-)	10%
Ambient Temperature (MAX)	40°C (104°F)
Case Temperature (MAX)	70°C (158°F)
Ballast Factor	Normal
Power Factor Correction	Active
Sound Rating	A (20-24 decibels)
Enclosure Type	Metal
Additional Info	Auto-restart, Inherently Thermally Protected, UL Class P

Electrical characteristics

Supply Current Frequency	60 Hz

Order information

10 Pack	Pallet Pack	DIY Pack	IP Pack
74105			

Dimensions

Wiring diagram – LFL 1C – see example on Page 10-61	
Case dimensions – Ref Drawing -A – see Page 10-62	
Length (L)	9.5 in (241 mm)
Width (W)	1.3 in (33 mm)
Height (H)	1.18 in (30 mm)
Mounting dimensions	
Mount Length (M)	8.9 in (226 mm)
Mount Width (X or F)	0.87 in (22 mm)
Mount Slots (MS)	0.3 in (8 mm)
Weight	1.15lbs
Exit Type	Side
Remote Mounting Distance to Lamp (F32T8)	18 ft
Remote Mounting Wire Gauge	18 AWG
Lead lengths	
Black	25 in (635 mm)
White	25 in (635 mm)
Blue	31 in (787 mm)
Red	45 in (1143 mm)

Specifications by lamp and wattage

Lamp	# of Lamps	Line Volts (V)	System Watts (W)	Nom. Line Current (A)	System Ballast Factor	Ballast Efficacy Factor	Power Factor% (>=)	Crest Factor (<=)	THD% (<=)	Min. Starting Temp (°F/°C)
	3	347	82	0.23	0.87	1.06	99	1.7	10	0/-18
F32T8	2	347	60	0.17	0.97	1.62	99	1.7	10	0/-18
	3	347	78	0.22	0.85	1.09	99	1.7	10	60/16
F32T8/WM	2	347	57	0.17	0.98	1.72	99	1.7	10	60/16
	3	347	73	0.20	0.83	1.14	99	1.7	10	60/16
F28T8	2	347	53	0.15	0.94	1.77	99	1.7	10	60/16
F32T8/25W	3	347	66	0.19	0.83	1.26	99	1.7	10	60/16
	3	347	62	0.18	0.88	1.42	99	1.7	10	0/-18
F25T8	2	347	48	0.14	0.98	2.04	99	1.7	10	0/-18
F25T8/WM	3	347	53	0.17	0.88	1.66	99	1.7	10	60/16
	3	347	44	0.13	0.83	1.89	98	1.7	10	0/-18
F17T8	2	347	34	0.11	0.93	2.74	91	1.7	34	0/-18
F17T8/WM	3	347	37	0.11	0.83	2.24	98	1.7	10	60/16
	3	347	32	0.10	0.76	2.38	96	1.7	14	0/-18
FE15T8	2	347	25	0.08	0.85	3.40	91	1.7	41	0/-18
	3	347	65	0.19	0.83	1.28	99	1.7	10	0/-18
F25T12	2	347	51	0.15	1.00	1.96	99	1.7	10	0/-18

Safety and performance

UL LISTED; UL Class P; UL Type 1 Outdoor; UL Type HL; ICES-005 for EMI and RFI; FCC – CLASS A Non-Consumer

ANSI - C82.11 - Cons 2002, ANSI - C62.41 - 1991 Product is compliant with material restriction requirements of RoHS

See page E-1 for warranty information.

UltraMax® General Series 347V Instant Start High Performance
T8 Instant Start Ballasts

74107 – GE432MAX-G-347 (Replaces GE432-N-347)

UltraMax® G-Series 347V Instant Start High-Efficiency

4 or 3– F32T8 347V "N" 0.87 BF UltraMax®G

- High-performance electronic ballast for all general fluorescent applications
- Instant start electronic ballast for long lamp starting cycles and low initial cost
- Light-weight, Slim Profile Mini Can Housing
- Parallel lamp operation means system maintenance is easier to manage
- Cold temperature 0°F Minimum Starting Temperature

General characteristics

Ballast Type	Electronic – High-Efficiency Instant Start
Starting Method	Instant start
Lamp Wiring	Parallel
Line Voltage Regulation(+/-)	10%
Ambient Temperature (MAX)	40°C (104°F)
Case Temperature (MAX)	70°C (158°F)
Ballast Factor	Normal
Power Factor Correction	Active
Sound Rating	A (20-24 decibels)
Enclosure Type	Metal
Additional Info	Auto-restart, Inherently Thermally Protected, UL Class P

Electrical characteristics

Supply Current Frequency	60 Hz

Order information

10 Pack	Pallet Pack	DIY Pack	IP Pack
74107			

Dimensions

Wiring diagram – LFL 1D – see example on Page 10-61	
Case dimensions – Ref Drawing -A – see Page 10-62	
Length (L)	9.5 in (241 mm)
Width (W)	1.3 in (33 mm)
Height (H)	1.18 in (30 mm)
Mounting dimensions	
Mount Length (M)	8.9 in (226 mm)
Mount Width (X or F)	0.87 in (22 mm)
Mount Slots (MS)	0.3 in (8 mm)
Weight	1.15lbs
Exit Type	Side
Remote Mounting Distance to Lamp (F32T8)	18 ft
Remote Mounting Wire Gauge	18 AWG
Lead lengths	
Black	25 in (635 mm)
White	25 in (635 mm)
Red & Blue	31 in (787 mm)
Yellow	47 in (1194 mm)

Specifications by lamp and wattage

Lamp	# of Lamps	Line Volts (V)	System Watts (W)	Nom. Line Current (A)	System Ballast Factor	Ballast Efficacy Factor	Power Factor% (>=)	Crest Factor (<=)	THD% (<=)	Min. Starting Temp (°F/°C)
	4	347	109	0.30	0.88	.81	99	1.7	10	0/-18
F32T8	3	347	87	0.25	0.95	1.09	99	1.7	10	0/-18
	4	347	103	0.29	0.86	.83	99	1.7	10	60/16
F32T8/WM	3	347	83	0.24	0.94	1.13	99	1.7	10	60/16
	4	347	96	0.27	0.84	.88	99	1.7	10	60/16
F28T8	3	347	76	0.22	0.92	1.21	99	1.7	10	60/16
F32T8/25W	4	347	87	0.25	0.84	.97	99	1.7	10	60/16
	4	347	83	0.24	0.88	1.06	99	1.7	10	0/-18
F25T8	3	347	68	0.20	0.96	1.41	99	1.7	10	0/-18
F25T8/WM	4	347	71	0.20	0.88	1.24	99	1.7	10	60/16
	4	347	52	0.17	0.84	1.62	99	1.7	10	0/-18
F17T8	3	347	48	0.14	0.91	1.90	98	1.7	10	0/-18
F17T8/WM	4	347	44	0.13	0.84	1.91	99	1.7	10	60/16
	4	347	47	0.14	0.76	1.62	98	1.7	12	0/-18
FE15T8	3	347	38	0.12	0.82	2.16	91	1.7	36	0/-18
	4	347	87	0.25	0.89	1.02	99	1.7	10	0/-18
F25T12	3	347	72	0.21	0.97	1.35	99	1.7	10	0/-18

Safety and performance

c UL us LISTED; UL Class P; UL Type 1 Outdoor; UL Type HL; ICES-005 for EMI and RFI; FCC – CLASS A Non-Consumer

ANSI - C82.11 - Cons 2002, ANSI - C62.41 - 1991 Product is compliant with material restriction requirements of RoHS

See page E-1 for warranty information.

UltraMax® General Series 347V Instant Start High Performance
T8 Instant Start Ballasts

74099 – GE259MAX-G-347 (Replaces GE259-N-347)

UltraMax® G-Series 347V Instant Start High-Efficiency

2 or 1– F96T8 347V "N" 0.87 BF UltraMax®G

- High-performance electronic ballast for all general fluorescent applications
- Instant start electronic ballast for long lamp starting cycles and low initial cost
- Light-weight, Slim Profile Mini Can Housing
- Parallel lamp operation means system maintenance is easier to manage
- Cold temperature 0°F Minimum Starting Temperature

General characteristics

Ballast Type	Electronic – High-Efficiency Instant Start
Starting Method	Instant start
Lamp Wiring	Parallel
Line Voltage Regulation(+/-)	10%
Ambient Temperature (MAX)	40°C (104°F)
Case Temperature (MAX)	70°C (158°F)
Ballast Factor	Normal
Power Factor Correction	Active
Sound Rating	A (20-24 decibels)
Enclosure Type	Metal
Additional Info	Auto-restart, Inherently Thermally Protected, UL Class P

Electrical characteristics

Supply Current Frequency	60 Hz

Order information

10 Pack	Pallet Pack	DIY Pack	IP Pack
74099	74100		

Dimensions

Wiring diagram – LFL 1B – see example on Page 10-61	
Case dimensions – Ref Drawing -A – see Page 10-62	
Length (L)	9.5 in (241 mm)
Width (W)	1.3 in (33 mm)
Height (H)	1.18 in (30 mm)
Mounting dimensions	
Mount Length (M)	8.9 in (226 mm)
Mount Width (X or F)	0.87 in (22 mm)
Mount Slots (MS)	0.3 in (8 mm)
Weight	1.04lbs
Exit Type	Side
Remote Mounting Distance to Lamp (F32T8)	18 ft
Remote Mounting Wire Gauge	18 AWG
Lead lengths	
Black	22 in (559 mm)
White	22 in (559 mm)
Blue	46 in (1168 mm)
Red	78 in (1981 mm)

Specifications by lamp and wattage

Lamp	# of Lamps	Line Volts (V)	System Watts (W)	Nom. Line Current (A)	System Ballast Factor	Ballast Efficacy Factor	Power Factor% (>=)	Crest Factor (<=)	THD% (<=)	Min. Starting Temp (°F/°C)
	2	347	108	0.31	0.88	0.81	99	1.7	10	0/-18
F96T8	1	347	67	0.20	1.06	1.58	9798	1.7	10	0/-18
	2	347	102	0.29	0.88	0.86	9999	1.7	10	60/16
F96T8/WM	1	347	64	0.19	1.05	1.64	9798	1.7	10	60/16
	2	347	95	0.27	1.05	1.11	9999	1.7	10	60/16
F96T8/WMP	1	347	60	0.17	1.26	2.10	9698	1.7	10	60/16

Safety and performance

UL Class P UL Type 1 Outdoor UL Type HL ICES-005 for EMI and RFI FCC – CLASS A Non-Consumer

ANSI - C82.11 - Cons 2002, ANSI - C62.41 - 1991 Product is compliant with material restriction requirements of RoHS

ProLine® T8 Instant Start 120V and 277V High Performance

T8 Instant Start Ballasts For F17 (2 ft), F25 (3 ft), F32 (4 ft), F40 (5 ft) Lamps

23673 – GE-332-120-N

ProLine® T8 Instant Start High Performance

3 or 2 – F32T8 120V "N" .87 BF ProLine®

- High-performance electronic ballast for all general fluorescent applications
- Instant start electronic ballast for long lamp starting cycles and low initial cost
- Lightweight, low-profile housing
- < 10% THD, > 99% power factor
- Parallel lamp operation means system maintenance is easier to manage
- Anti-striation control for better light quality, with no visible striations

General characteristics

Ballast Type	Electronic – Standard Instant Start
Starting Method	Instant start
Lamp Wiring	Parallel
Line Voltage Regulation (+/-)	10%
Case Temperature (MAX)	70°C (158°F)
Ballast Factor	Normal
Power Factor Correction	Active
Sound Rating	A (20-24 decibels)
Additional Info	Auto-restart, Inherently Thermally Protected, UL Class P

Electrical characteristics

Supply Current Frequency	50 Hz/60 Hz

Order information

10 Pack	Pallet Pack	DIY Pack	IP Pack
23673	24165		

Dimensions

Wiring diagram – LFL 1C – see example on Page 10-61	
Case dimensions – Ref Drawing -A – see Page 10-62	
Length (L)	9.5 in (241 mm)
Width (W)	1.7 in (43 mm)
Height (H)	1.18 in (30 mm)
Mounting dimensions	
Mount Length (M)	8.9 in (226 mm)
Mount Width (X or F)	1.18 in (30 mm)
Mount Slots (MS)	0.3 in (8 mm)
Weight	1.40 lbs
Exit Type	Side
Remote Mounting Distance to Lamp (F32T8)	18 ft
Remote Mounting Wire Gauge	18 AWG
Lead lengths	**Length (± 1 in)**
Black	25 in (635 mm)
Red	45 in (1143 mm)
White	25 in (635 mm)
Blue	31 in (787 mm)

Specifications by lamp and wattage

Lamp	# of Lamps	Line Volts (V)	System Watts (W)	Nom. Line Current (A)	System Ballast Factor	Ballast Efficacy Factor	Power Factor% (>=)	Crest Factor (<=)	THD% (<=)	Min. Starting Temp (°F/°C)
	3	120	85	0.73	0.87	1.02	99	1.7	10	0/-18
F32T8	2	120	65	0.56	0.94	1.44	99	1.7	10	0/-18
	3	120	79	0.68	0.86	1.08	99	1.7	10	60/16
F32T8/WM	2	120	60	0.51	0.94	1.56	99	1.7	10	60/16
F40T8	2	120	78	0.67			99	1.7	10	0/-18
	3	120	72	0.62	0.84	1.16	99	1.7	10	60/16
F28T8	2	120	54	0.47	0.91	1.68	99	1.7	10	60/16
	3	120	69	0.60	0.87	1.26	99	1.7	10	0/-18
F25T12	2	120	54	0.46	0.94	1.74	99	1.7	10	0/-18
	3	120	67	0.58	0.87	1.29	99	1.7	10	0/-18
F25T8	2	120	51	0.44	0.97	1.90	99	1.7	10	0/-18
	3	120	47	0.41	0.91	1.93	99	1.7	10	0/-18
	2	120	30	0.31	0.97	3.23	99	1.7	12	0/-18
F17T8	2	120	30	0.26	0.98	3.26	98	1.7	13	0/-18

Safety and performance

UL Type 1 Outdoor UL Type HL FCC – CLASS A Non-Consumer UL Class P c UL us LISTED Product is compliant with material restriction requirements of RoHS

See page E-1 for warranty information.

ProLine® T8 Instant Start 120V and 277V High Performance

T8 Instant Start Ballasts For 46 – 59W 4 ft – 8 ft Slimline Lamps

23677 – GE-259-120-N

ProLine® T8 Instant Start High Performance

2 or 1 – F96T8 120V Normal Light .87 BF ProLine®

- High-performance electronic ballast for all general fluorescent applications
- Instant start electronic ballast for long lamp starting cycles and low initial cost
- Lightweight, low-profile housing
- < 10% THD, > 99% power factor
- Parallel lamp operation means system maintenance is easier to manage
- Anti-striation control for better light quality, with no visible striations

General characteristics

Ballast Type	Electronic – Standard Instant Start
Starting Method	Instant start
Lamp Wiring	Parallel
Line Voltage Regulation (+/-)	10%
Case Temperature (MAX)	70°C (158°F)
Ballast Factor	Normal
Power Factor Correction	Active
Sound Rating	A (20-24 decibels)
Additional Info	Auto-restart, Inherently Thermally Protected, UL Class P

Electrical characteristics

Supply Current Frequency	50 Hz/60 Hz

Order information

10 Pack	Pallet Pack	DIY Pack	IP Pack
23677			

Dimensions

Wiring diagram – LFL 1B – see example on Page 10-61	
Case dimensions – Ref Drawing -A – see Page 10-62	
Length (L)	9.5 in (241 mm)
Width (W)	1.7 in (43 mm)
Height (H)	1.18 in (30 mm)
Mounting dimensions	
Mount Length (M)	8.9 in (226 mm)
Mount Width (X or F)	1.18 in (30 mm)
Mount Slots (MS)	0.3 in (8 mm)
Weight	1.40 lbs
Exit Type	Side
Remote Mounting Distance to Lamp	18 ft
Remote Mounting Wire Gauge	18 AWG
Lead lengths	**Length (± 1 in)**
Black	25 in (635 mm)
Red	66 in (1676 mm)
White	25 in (635 mm)
Blue	58 in (1473 mm)

Specifications by lamp and wattage

Lamp	# of Lamps	Line Volts (V)	System Watts (W)	Nom. Line Current (A)	System Ballast Factor	Ballast Efficacy Factor	Power Factor% (>=)	Crest Factor (<=)	THD% (<=)	Min. Starting Temp (°F/°C)
	2	120	112	0.96	0.87	0.77	99	1.7	10	0/-18
F96T8	1	120	71	0.61	1.04	1.46	99	1.7	10	0/-18
	2	120	104	0.89	0.87	0.83	99	1.7	10	0/-18
F96T8/WM	1	120	65	0.56	1.04	1.60	99	1.7	10	0/-18
	1	120					99	1.7	10	0/-18
F96T8/WMP	2	120					99	1.7	10	0/-18

Safety and performance

UL Type 1 Outdoor UL Type HL FCC – CLASS A Non-Consumer UL Class P Product is compliant with material restriction requirements of RoHS

See page E-1 for warranty information.

Residential Grade ProLine® T8 120V
T8 Instant Start Ballasts For F17 (2 ft), F25 (3 ft), F32 (4 ft) Lamps

97782 – GE232-120-RES

Residential Grade ProLine® T8 120V

2 or 1– F32T8 120V "N" 0.87 BF Residential ProLine®

- Residential grade -instant start
- EMI/RFI meets FCC Class B Consumer Limits
- Meets ballast requirements of Energy Star Residential Lighting Fixture program
- Light-weight, Slim Profile Mini Can Housing

General characteristics

Ballast Type	Electronic – Standard Instant Start
Starting Method	Instant start
Lamp Wiring	Parallel
Line Voltage Regulation(+/-)	10%
Ambient Temperature (MAX)	40°C (104°F)
Case Temperature (MAX)	70°C (158°F)
Ballast Factor	Normal
Power Factor Correction	
Sound Rating	A (20-24 decibels)
Enclosure Type	Metal
Additional Info	Auto-restart, Inherently Thermally Protected, UL Class P

Electrical characteristics

Supply Current Frequency	50 Hz/60 Hz

Order information

10 Pack	Pallet Pack	DIY Pack	IP Pack
97782		93884	

Dimensions

Wiring diagram – LFL 1B – see example on Page 10-61	
Case dimensions – Ref Drawing -A – see Page 10-62	
Length (L)	9.5 in (241 mm)
Width (W)	1.3 in (33 mm)
Height (H)	1.18 in (30 mm)
Mounting dimensions	
Mount Length (M)	8.9 in (226 mm)
Mount Width (X or F)	0.87 in (22 mm)
Mount Slots (MS)	0.3 in (8 mm)
Weight	1.04lbs
Exit Type	Side
Remote Mounting Distance to Lamp (F32T8)	18 ft
Remote Mounting Wire Gauge	18 AWG
Lead lengths	
Black	25 in (635 mm)
White	25 in (635 mm)
Blue	31 in (787 mm)
Red	45 in (1143 mm)

Specifications by lamp and wattage

Lamp	# of Lamps	Line Volts (V)	System Watts (W)	Nom. Line Current (A)	System Ballast Factor	Ballast Efficacy Factor	Power Factor% (>=)	Crest Factor (<=)	THD% (<=)	Min. Starting Temp (°F/°C)
	2	120	54	0.8	0.83	1.54	55	1.7	79	0/-18
F32T8	1	120	33	0.55	0.99	3.00	51	1.7	82	0/-18
	2	120	50	0.76	0.82	1.64	55	1.7	80	60/16
F32T8/WM	1	120	32	0.53	0.99	3.09	50	1.7	83	60/16
	2	120	47	0.72	0.81	1.72	54	1.7	81	60/16
F28T8	1	120	30	0.5	0.97	3.23	50	1.7	83	60/16
	2	120	42	0.65	0.88	2.10	53	1.7	82	0/-18
F25T8	1	120	26	0.45	1.04	4.00	48	1.7	84	0/-18
	2	120	30	0.49	0.88	2.93	49	1.7	85	0/-18
F17T8	1	120	19	0.35	1.03	5.42	45	1.7	85	0/-18

Safety and performance

UL Class P UL Type 1 Outdoor UL Type HL FCC – CLASS B Consumer ANSI - C82.11 - Cons 2002, ANSI - C62.41 - 1991

Product is compliant with material restriction requirements of RoHS

See page E-1 for warranty information.

Residential Grade ProLine® T8 120V

T8 Instant Start Ballasts For F17 (2 ft), F25 (3 ft), F32 (4 ft) Lamps

97783 – GE432-120-RES

Residential Grade ProLine® T8 120V

4 or 3 – F32T8 120V "N" .87 BF Residential ProLine®

- Residential grade -instant start
- EMI/RFI meets FCC Class B Consumer Limits
- Meets ballast requirements of Energy Star Residential Lighting Fixture program
- Light-weight, Slim Profile Mini Can Housing

General characteristics

Ballast Type	Electronic – Standard Instant Start
Starting Method	Instant start
Lamp Wiring	Parallel
Line Voltage Regulation(+/-)	10%
Ambient Temperature (MAX)	40°C (104°F)
Case Temperature (MAX)	70°C (158°F)
Ballast Factor	Normal
Power Factor Correction	
Sound Rating	A (20-24 decibels)
Enclosure Type	Metal
Additional Info	Auto-restart, Inherently Thermally Protected, UL Class P

Electrical characteristics

Supply Current Frequency	50Hz/60Hz

Order information

10 Pack	Pallet Pack	DIY Pack	IP Pack
97783		93885	

Dimensions

Wiring diagram – LFL 1D – see example on Page 10-61	
Case dimensions – Ref Drawing -A – see Page 10-62	
Length (L)	9.5 in (241 mm)
Width (W)	1.3 in (33 mm)
Height (H)	1.18 in (30 mm)
Mounting dimensions	
Mount Length (M)	8.9 in (226 mm)
Mount Width (X or F)	0.87 in (22 mm)
Mount Slots (MS)	0.3 in (8 mm)
Weight	1.04lbs
Exit Type	Side
Remote Mounting Distance to Lamp (F32T8)	18 ft
Remote Mounting Wire Gauge	18 AWG
Lead lengths	
White and Black	25 in (635 mm)
Blue	31 in (787 mm)
Red	31 in (787 mm)
Yellow	47 in (1194 mm)

Specifications by lamp and wattage

Lamp	# of Lamps	Line Volts (V)	System Watts (W)	Nom. Line Current (A)	System Ballast Factor	Ballast Efficacy Factor	Power Factor% (>=)	Crest Factor (<=)	THD% (<=)	Min. Starting Temp (°F/°C)
F32T8	4	120	105	1.62	0.83	0.79	57	1.7	78	0/-18
	3	120	86	1.38	0.88	1.02	55	1.7	79	0/-18
F32T8/WM	4	120	98	1.50	0.81	0.82	56	1.7	80	60/16
	3	120	81	1.29	0.88	1.08	54	1.7	80	60/16
F28T8	4	120	90	1.42	0.79	0.87	55	1.7	80	60/16
	3	120	75	1.23	0.87	1.16	53	1.7	80	60/16
F25T8	4	120	83	1.31	0.87	1.04	54	1.7	82	0/-18
	3	120	68	1.13	0.94	1.38	52	1.7	81	0/-18
F17T8	4	120	58	0.98	0.86	1.48	51	1.7	85	0/-18
	3	120	48	0.84	0.93	1.93	49	1.7	83	0/-18

Safety and performance

UL LISTED; UL Class P; UL Type 1 Outdoor; UL Type HL; FCC – CLASS B Consumer; ANSI - C82.11 - Cons 2002, ANSI - C62.41 - 1991

Product is compliant with material restriction requirements of RoHS

See page E-1 for warranty information.

Electromagnetic T8 120V and 277V Ballasts

T8 Rapid Start Ballasts For F17 (2 ft), F25 (3 ft), F32 (4 ft) Lamps

87125 – GEM232T8RS120

Electromagnetic T8 Ballasts

2 – F32T8, RS, 120V, Magnetic Ballast (M232SR120C)

- Magnetic ballast construction for all general fluorescent lighting
- Extends lamp life in frequently switched applications
- Color coded ballast and package labels reduce misapplication errors (120V Yellow, 277V Red)
- Great for areas requiring no EMI/RFI noise
- Anti-striation control for better light quality, with no visible striations

General characteristics

Ballast Type	Magnetic – Rapid Start
Starting Method	Rapid start
Lamp Wiring	Series
Line Voltage Regulation (+/-)	5%
Ambient Temperature (MAX)	105°F (41°C)
Case Temperature (MAX)	90°C (194°F)
Ballast Factor	Normal
Power Factor Correction	
Sound Rating	A (20-24 decibels)
Additional Info	Auto-restart, Inherently Thermally Protected, UL Class P

Electrical characteristics

Supply Current Frequency	60 Hz

Order information

10 Pack	Pallet Pack	DIY Pack	IP Pack
87125			87125

Dimensions

Wiring diagram – 87125 – see example on Page 10-61	
Case dimensions – 87125 – see Page 10-62	
Length (L)	9.5 in (241 mm)
Width (W)	2.4 in (61 mm)
Height (H)	1.5 in (38 mm)
Mounting dimensions	
Mount Length (M)	8.9 in (226 mm)
Mount Width (X or F)	1.7 in (43 mm)
Mount Slots (MS)	0.3 in (8 mm)
Weight	3.40 lbs
Exit Type	Side
Remote Mounting Distance to Lamp (F32T8)	10 ft
Remote Mounting Wire Gauge	18 AWG
Lead lengths	**Length (± 1 in)**
Blue and Red	15 in (381 mm)
White and Black	15 in (381 mm)
Yellow	15 in (381 mm)

Specifications by lamp and wattage

Lamp	# of Lamps	Line Volts (V)	System Watts (W)	Nom. Line Current (A)	System Ballast Factor	Ballast Efficacy Factor	Power Factor% (>=)	Crest Factor (<=)	THD% (<=)	Min. Starting Temp (°F/°C)
	2	120	73	0.65	0.92	1.25	93	1.7	6	50/10
F32T8	1	120	55	0.46	1.20	2.15	99	1.9	13	50/10
	2	277	73	0.65	0.92	1.25	93	1.7	6	50/10
F32T8/U	1	277	55	0.46	1.20	2.15	99	1.9	13	50/10
	2	120	66	0.57	0.97	1.45	98	1.6	6	50/10
F25T8	1	120	50	0.43	1.00	2.00	99	1.9	16	50/10
	2	277	66	0.57	0.97	1.45	98	1.6	6	50/10
F25T8/U	1	277	50	0.43	1.00	2.00	99	1.9	16	50/10
	2	120	53	0.45	1.00	1.90	99	1.9	12	50/10
F17T8	1	120	44	0.38	1.10	2.40	96	2.0	23	50/10
	2	277	53	0.45	1.00	1.90	99	1.9	12	50/10
F17T8/U	1	277	44	0.38	1.10	2.40	96	2.0	23	50/10

Safety and performance

UL Type 1 Outdoor · UL Type HL · UL Class P · c UL us LISTED

See page E-1 for warranty information.

Wiring Diagrams
T8 Instant Start Ballasts

LFL 1A

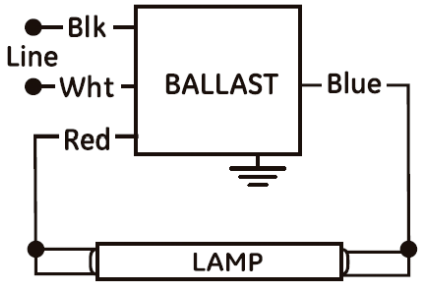

LFL 1B

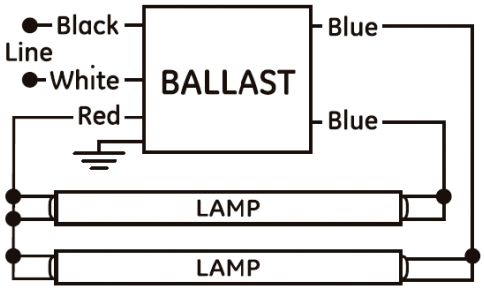

LFL 1C

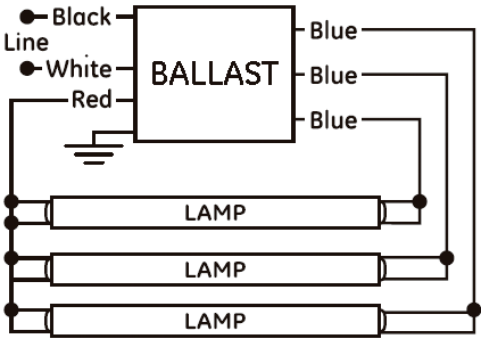

LFL 1D

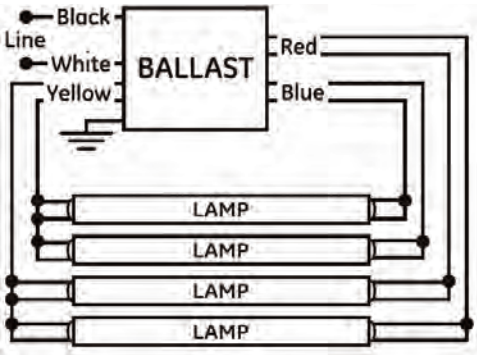

LFL -6H

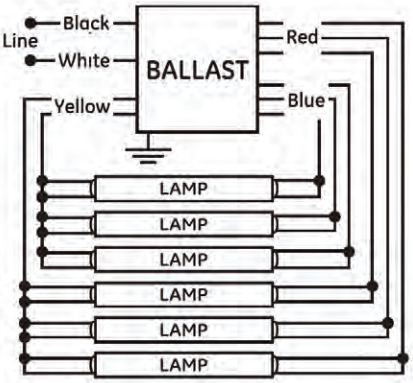

87125

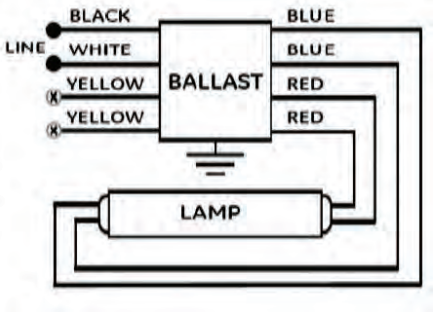

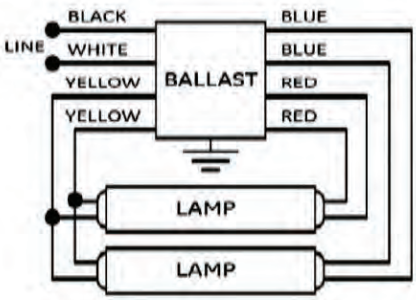

See page E-1 for warranty information.

Case Dimensions
T8 Instant Start Ballasts

-A

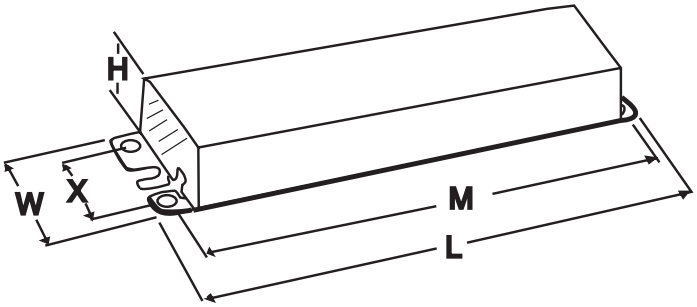

ST

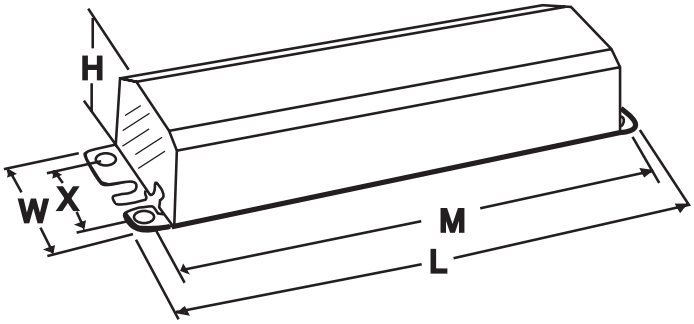

LG

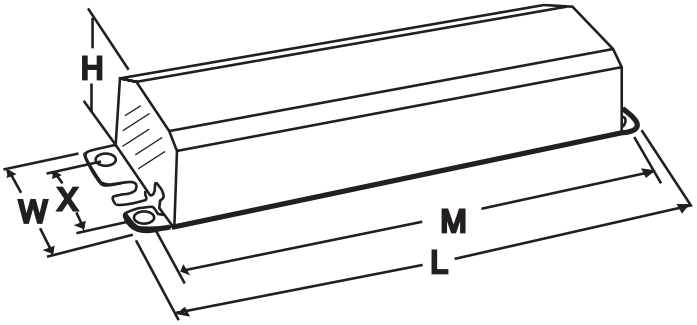

87125

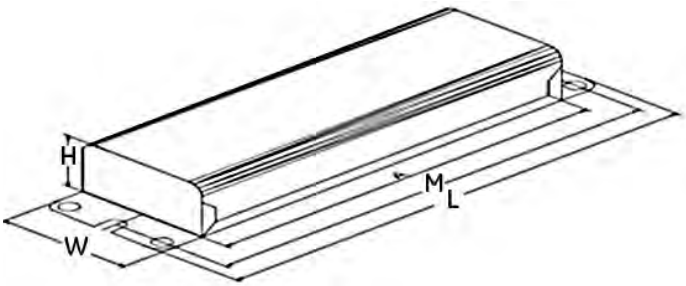

See page E-1 for warranty information.

Table of Contents
T8 Programmed Start Ballasts

UltraStart® T8 120–277V Programmed Start

T8 Programmed Start Ballasts For F17 (2 ft), F25 (3 ft), F32 (4 ft) Lamps

75952 – GE132-MVPS-L

UltraStart® T8 Programmed Start

1 F32T8 120V-277V Low Watts .71 BF <10% THD UltraStart®

- A new generation of ultra-efficient Programmed Start ballasts
- Anti-striation circuitry reduces striations with energy saving lamps.
- Extends lamp life in frequently switched applications (>100,000 on/off cycles)
- Multi-voltage technology handles voltage from 120 to 277V
- Starting time visually the same as instant start
- Light-weight, Slim Profile Mini Can Housing

General characteristics

Ballast Type	Electronic - Program/ Rapid Start
Starting Method	Programmed start
Lamp Wiring	Parallel
Line Voltage Regulation (+/-)	10 %
Ambient Temperature (MAX)	
Case Temperature (MAX)	70 °C (158 °F)
Ballast Factor	Low-PS (.71)
Power Factor Correction	Active
Sound Rating	A (20-24 decibels)
Enclosure Type	Metal
Additional Info	Anti-striation control, Inherently Thermally Protected, UL Class P, Universal voltage

Electrical characteristics

Supply Current Frequency (MIN)	50Hz/60 Hz

Order information

10 Pack	Pallet Pack	DIY Pack	IP Pack
75952			

Dimensions

Wiring diagram – LFL PS1 – see example on page 11-21	
Case dimensions- Ref Drawing -A – see Page 11-22	
Length (L)	9.5 in (241 mm)
Width (W)	1.3 in (43 mm)
Height (H)	1.18 in (30 mm)
Mounting dimensions	
Mount Length (M)	8.9 in (226 mm)
Mount Width (X or F)	1.18 in (30 mm)
Mount Slots (MS)	0.3 in (8 mm)
Weight	1.65 lbs
Remote Mounting Distance to Lamp (F32T8)	18 ft
Remote Mounting Wire Gauge	18 AWG
Lead lengths	**Length (± 1 in.)**
Black	25.0 in (635 mm)
White	25.0 in (635 mm)
Blue	33.0 in (838 mm)
Yellow	47.0 in (1194 mm)

Specifications by lamp and wattage

Lamp	# of Lamps	Line Volts	System Watts	Nom. Line Current	System Ballast Factor	Ballast Efficacy Factor	Power Factor% (>=)	Crest Factor (<=)	THD% (<=)	Min. Starting Temp (°F/°C)
	1	120	25	0.22 A	0.72	2.88	99	1.7	10	0/-18
F32T8	1	277	25	0.10 A	0.72	2.88	96	1.7	10	0/-18
	1	120	23	0.20 A	0.71	3.09	99	1.7	10	50/10
F32T8/WM	1	277	23	0.09 A	0.71	3.09	95	1.7	10	50/10
	1	120	22	0.19 A	0.71	3.23	99	1.7	10	50/10
F28T8	1	277	22	0.09 A	0.71	3.23	94	1.7	10	50/10
	1	120	20	0.18 A	0.71	3.55	99	1.7	10	50/10
F32T8/25W	1	277	21	0.08 A	0.71	3.38	94	1.7	10	50/10
	1	277	20	0.08 A	0.73	3.65	93	1.7	10	0/-18
F25T8	1	120	19	0.17 A	0.73	3.84	99	1.7	10	0/-18
	1	120	17	0.15 A	0.71	4.18	99	1.7	10	50/10
F25T8/WM	1	277	18	0.07 A	0.71	3.94	92	1.7	10	50/10
	1	120	14	0.12 A	0.75	5.36	99	1.7	10	0/-18
F17T8	1	277	15	0.06 A	0.75	5.00	89	1.7	10	0/-18
	1	120	13	0.11 A	0.74	5.69	99	1.7	10	50/10
F17T8/WM	1	277	13	0.06 A	0.74	5.69	87	1.7	10	50/10
	1	120	12	0.10 A	0.66	5.50	99	1.7	10	0/-18
FE15T8	1	277	13	0.10 A	0.66	5.08	86	1.7	10	0/-18
	1	120	29	0.25 A	0.71	2.45	99	1.7	10	0/-18
F40T8	1	277	29	0.11 A	0.71	2.45	97	1.7	10	0/-18
	1	120	20	0.18 A	0.72	3.60	99	1.7	10	0/-18
F25T12	1	277	21	0.08 A	0.72	3.43	94	1.7	10	0/-18

Safety and performance

UL Type 1 Outdoor UL Type HL FCC – CLASS A Non-Consumer UL Class P ANSI – C62.41 Product is compliant with material restriction requirements of RoHS

cUL Listed UL Listed NEMA Premium

See page E-1 for warranty information.

UltraStart® T8 120–277V Programmed Start

T8 Programmed Start Ballasts For F17 (2 ft), F25 (3 ft), F32 (4 ft) Lamps

75953 – GE132-MVPS-N

UltraStart® T8 Programmed Start

1 F32T8 120V-277V Normal Light .88 BF <10% THD UltraStart®

- < 10% THD, > 99% power factor
- A new generation of ultra-efficient Programmed Start ballasts
- Anti-striation circuitry reduces striations with energy saving lamps.
- Extends lamp life in frequently switched applications (>100,000 on/off cycles)
- Multi-voltage technology handles voltage from 120 to 277V
- Starting time visually the same as instant start
- Light-weight, Slim Profile Mini Can Housing

General characteristics

Ballast Type	Electronic - Program/ Rapid Start
Starting Method	Programmed start
Lamp Wiring	Parallel
Line Voltage Regulation (+/-)	10 %
Ambient Temperature (MAX)	
Case Temperature (MAX)	70 °C (158 °F)
Ballast Factor	Normal
Power Factor Correction	Active
Sound Rating	A (20-24 decibels)
Enclosure Type	Metal
Additional Info	Anti-striation control, Inherently Thermally Protected, UL Class P, Universal voltage

Electrical characteristics

Supply Current Frequency	50Hz
Supply Current Frequency (MIN)	50Hz/60 Hz

Order information

10 Pack	Pallet Pack	DIY Pack	IP Pack
75953			

Dimensions

Wiring diagram – LFL PS1 – see example on page 11-21	
Case dimensions- Ref Drawing -A – see Page 11-22	
Length (L)	9.5 in (241 mm)
Width (W)	1.3 in (43 mm)
Height (H)	1.18 in (30 mm)
Mounting dimensions	
Mount Length (M)	8.9 in (226 mm)
Mount Width (X or F)	1.18 in (30 mm)
Mount Slots (MS)	0.3 in (8 mm)
Weight	1.65 lbs
Exit Type	Side
Remote Mounting Distance to Lamp (F32T8)	18 ft
Remote Mounting Wire Gauge	18 AWG
Lead lengths	**Length (± 1 in.)**
Yellow	47.0 in (1194 mm)
White	25.0 in (635 mm)
Red	33.0 in (838 mm)
Blue	33.0 in (838 mm)
Black	25.0 in (635 mm)

Specifications by lamp and wattage

Lamp	# of Lamps	Line Volts	System Watts	Nom. Line Current	System Ballast Factor	Ballast Efficacy Factor	Power Factor% (>=)	Crest Factor (<=)	THD% (<=)	Min. Starting Temp (°F/°C)
	1	120	30	0.26 A	0.89	2.97	99	1.7	10	0/-18
F32T8	1	277	30	0.12 A	0.89	2.97	95	1.7	10	0/-18
	1	120	28	0.24 A	0.87	3.11	99	1.7	10	50/10
F32T8/WM	1	277	28	0.11 A	0.87	3.11	94	1.7	10	50/10
	1	120	26	0.22 A	0.87	3.35	99	1.7	10	50/10
F28T8	1	277	26	0.10 A	0.87	3.35	93	1.7	10	50/10
	1	120	24	0.21 A	0.86	3.58	99	1.7	10	50/10
F32T8/25W	1	277	24	0.10 A	0.86	3.58	93	1.7	10	50/10
	1	277	24	0.09 A	0.89	3.71	92	1.7	10	0/-18
F25T8	1	120	24	0.20 A	0.89	3.71	99	1.7	10	0/-18
	1	12	20	0.18 A	0.88	4.40	99	1.7	10	50/10
	1	120	20	0.18 A	0.88	4.40	99	1.7	10	50/10
F25T8/WM	1	277	21	0.08 A	0.88	4.19	90	1.7	10	50/10
	1	120	17	0.15 A	0.91	5.35	99	1.7	10	0/-18
F17T8	1	277	18	0.07 A	0.91	5.06	87	1.7	10	0/-18
	1	120	15	0.13 A	0.90	6.00	99	1.7	10	50/10
F17T8/WM	1	277	15	0.07 A	0.90	6.00	85	1.7	10	50/10
	1	120	14	0.12 A	0.80	5.71	99	1.7	10	0/-18
FE15T8	1	277	15	0.06 A	0.80	5.33	83	1.7	10	0/-18
	1	120	35	0.31 A	0.88	2.51	99	1.7	10	0/-18
F40T8	1	277	35	0.01 A	0.88	2.51	96	1.7	10	0/-18
	1	120	25	0.21 A	0.89	3.56	99	1.7	10	0/-18
F25T12	1	277	25	0.10 A	0.89	3.56	93	1.7	10	0/-18

Safety and performance

UL Type 1 Outdoor UL Type HL FCC – CLASS A Non-Consumer UL Class P ANSI – C62.41 Product is compliant with material restriction requirements of RoHS cUL Listed UL Listed NEMA Premium

See page E-1 for warranty information.

UltraStart® T8 120–277V Programmed Start

T8 Programmed Start Ballasts For F17 (2 ft), F25 (3 ft), F32 (4 ft) Lamps

75954 – GE132-MVPS-H

UltraStart® T8 Programmed Start

1 F32T8 120V-277V High Light 1.18 BF <10% THD UltraStart®

- A new generation of ultra-efficient Programmed Start ballasts
- Extends lamp life in frequently switched applications (> 100,000 on/off cycles)
- Starting time visually the same as instant start
- Multi-voltage technology handles voltage from 120 to 277V
- Anti-striation circuitry reduces striations with energy saving lamps.

General characteristics

Ballast Type	Electronic - Program/ Rapid Start
Starting Method	Programmed start
Lamp Wiring	Parallel
Line Voltage Regulation (+/-)	10 %
Ambient Temperature (MAX)	
Case Temperature (MAX)	70 °C (158 °F)
Ballast Factor	High (1.18)
Power Factor Correction	Active
Sound Rating	A (20-24 decibels)
Additional Info	Auto-restart, Inherently Thermally Protected, UL Class P

Electrical characteristics

Supply Current Frequency (MIN)	60 Hz

Order information

10 Pack	Pallet Pack	DIY Pack	IP Pack
75954			

Dimensions

Wiring diagram – LFL PS1 – see example on page 11-21	
Case dimensions- Ref Drawing -A – see Page 11-22	
Length (L)	9.5 in (241 mm)
Width (W)	1.7 in (43 mm)
Height (H)	1.18 in (30 mm)
Mounting dimensions	
Mount Length (M)	8.9 in (226 mm)
Mount Width (X or F)	1.18 in (30 mm)
Mount Slots (MS)	0.3 in (8 mm)
Weight	1.40 lbs
Exit Type	Side
Remote Mounting Distance to Lamp (F32T8)	18 ft
Remote Mounting Wire Gauge	18 AWG
Lead lengths	**Length (± 1 in.)**
Yellow	47.0 in (1194 mm)
White	25.0 in (635mm)
Black	25.0 in (635 mm)
Blue	33.0 in (838 mm)

Specifications by lamp and wattage

Lamp	# of Lamps	Line Volts	System Watts	Nom. Line Current	System Ballast Factor	Ballast Efficacy Factor	Power Factor% (>=)	Crest Factor (<=)	THD% (<=)	Min. Starting Temp (°F/°C)
	1	120	39	0.35 A	1.18	3.03	98	1.7	10	0/-18
F32T8	1	277	39	0.15 A	1.18	3.03	97	1.7	10	0/-18
	1	120	36	0.32 A	1.16	3.22	99	1.7	10	50/10
F32T8/WM	1	277	36	0.14 A	1.16	3.22	96	1.7	10	50/10
	1	120	33	0.29 A	1.16	3.52	99	1.7	10	50/10
F28T8	1	277	33	0.13 A	1.16	3.52	96	1.7	10	50/10
	1	120	31	0.27 A	1.15	3.71	99	1.7	10	50/10
F32T8/25W	1	277	31	0.12 A	1.15	3.71	95	1.7	10	50/10
	1	277	30	0.12 A	1.17	3.90	95	1.7	10	0/-18
F25T8	1	120	30	0.27 A	1.17	3.90	99	1.7	10	0/-18
	1	120	26	0.23 A	1.16	4.46	99	1.7	10	50/10
F25T8/WM	1	277	27	0.10 A	1.16	4.30	94	1.7	10	50/10
	1	120	21	0.19 A	1.19	5.67	99	1.7	10	0/-18
F17T8	1	277	22	0.09 A	1.19	5.41	91	1.7	10	0/-18
	1	120	19	0.17 A	1.18	6.21	99	1.7	10	50/10
F17T8/WM	1	277	19	0.08 A	1.18	6.21	89	1.7	10	50/10
	1	120	17	0.15 A	1.05	6.18	99	1.7	10	0/-18
FE15T8	1	277	18	0.08 A	1.05	5.83	88	1.7	10	0/-18
	1	120	48	0.42 A	1.18	2.46	99	1.7	10	0/-18
F40T8	1	277	47	0.18 A	1.18	2.51	98	1.7	10	0/-18
	1	120	33	0.29 A	1.25	3.79	99	1.7	10	0/-18
F25T12	1	277	33	0.13 A	1.25	3.79	96	1.7	10	0/-18

Safety and performance

UL Type 1 Outdoor UL Type HL FCC – CLASS A Non-Consumer UL Class P ANSI – C62.41 Product is compliant with material restriction requirements of RoHS

cUL Listed UL Listed NRCan NEMA Premium

High Temperature Rated: Suitable for high temperature applications 70C max case temp 5 yr warranty or 90C max case temp 3 yr warranty

See page E-1 for warranty information.

UltraStart® T8 120–277V Programmed Start

T8 Programmed Start Ballasts For F17 (2 ft), F25 (3 ft), F32 (4 ft) Lamps

96714 – GE232-MVPS-N

UltraStart® T8 Programmed Start

2 or 1 – F32T8 120V-277V Normal Light .88 BF <10% THD UltraStart®

- < 10% THD, > 99% power factor
- A new generation of ultra-efficient Programmed Start ballasts (> 90% efficiency)
- Anti-striation circuitry reduces striations with energy saving lamps
- Extends lamp life in frequently switched applications (> 100,000 on/off cycles)
- Multi-voltage technology handles voltage from 120 to 277V
- Light-weight, Slim Profile Mini Can Housing

General characteristics

Ballast Type	Electronic – Programmed/ Rapid Start
Starting Method	Programmed start
Lamp Wiring	Parallel
Line Voltage Regulation (+/-)	10%
Ambient Temperature (MAX)	104°F (40°C)
Case Temperature (MAX)	70°C (158°F)
Ballast Factor	Normal
Power Factor Correction	Active
Sound Rating	A (20-24 decibels)
Additional Info	Anti-striation control, Inherently Thermally Protected, UL Class P, Universal voltage

Electrical characteristics

Supply Current Frequency	50 Hz/Supply Current Frequency (MIN)/ 50 Hz/ 60 (MIN)
Supply Current Frequency (MIN)	50 Hz/60 Hz

Order information

10 Pack	Pallet Pack	DIY Pack	IP Pack
96714			

Dimensions

Wiring diagram	
Case dimensions- Ref Drawing -A – see Page 11-22	
Length (L)	9.5 in (241 mm)
Width (W)	1.3 in (43 mm)
Height (H)	1.18 in (30 mm)
Mounting dimensions	
Mount Length (M)	8.9 in (226 mm)
Mount Width (X or F)	1.18 in (30 mm)
Mount Slots (MS)	0.3 in (8 mm)
Weight	1.65 lbs
Exit Type	Side
Remote Mounting Distance to Lamp (F32T8)	18 ft
Remote Mounting Wire Gauge	18 AWG
Lead lengths	**Length (± 1 in)**
Black	25 in (635 mm)
Blue and Red	33 in (838 mm)
White	25 in (635 mm)
Yellow	47 in (1194 mm)

Specifications by lamp and wattage

Lamp	# of Lamps	Line Volts	System Watts	Nom. Line Current	System Ballast Factor	Ballast Efficacy Factor	Power Factor% (>=)	Crest Factor (<=)	THD% (<=)	Min. Starting Temp (°F/°C)
	2	120	59	0.48 A	0.89	1.50	99	1.7	10	0/-18
	2	277	58	0.21 A	0.89	1.53	96	1.7	10	0/-18
	1	120	37	0.30 A	1.05	2.83	98	1.7	10	0/-18
F32T8	1	277	37	0.14 A	1.05	2.83	93	1.7	10	0/-18
	2	120	55	0.45 A	0.88	1.60	99	1.7	10	50/10
	2	277	54	0.20 A	0.88	1.62	96	1.7	10	50/10
	1	120	34	0.28 A	1.02	3.00	98	1.7	10	50/10
F32T8/WM	1	277	34	0.13 A	1.02	3.00	93	1.7	10	50/10
	2	120	51	0.42 A	0.86	1.68	99	1.7	10	50/10
	2	277	50	0.18 A	0.86	1.72	95	1.7	10	50/10
	1	120	32	0.26 A	1.00	3.12	98	1.7	10	50/10
F28T8	1	277	32	0.12 A	1.00	3.12	92	1.7	10	50/10

Other compatible lamps: F17T8, F25T8, F32T8/25W

Safety and performance

UL Type 1 Outdoor UL Type HL FCC – CLASS A Non-Consumer UL Class P ANSI – C62.41 cUL Listed UL Listed NEMA Premium

Product is compliant with material restriction requirements of RoHS

96720 – GE232-MVPS-L

UltraStart® T8 Programmed Start

2 or 1 – F32T8 120V-277V Low Watts .71 BF <10% THD UltraStart®

- A new generation of ultra-efficient Programmed Start ballasts (> 90% efficiency)
- Anti-striation circuitry reduces striations with energy saving lamps
- Extends lamp life in frequently switched applications (> 100,000 on/off cycles)
- Multi-voltage technology handles voltage from 120 to 277V
- Parallel lamp operation means system maintenance is easier to manage

General characteristics

Ballast Type	Electronic – Programmed / Rapid Start
Starting Method	Programmed start
Lamp Wiring	Parallel
Line Voltage Regulation (+/-)	10%
Ambient Temperature (MAX)	104°F (40°C)
Case Temperature (MAX)	70°C (158°F)
Ballast Factor	Low
Power Factor Correction	Active
Sound Rating	A (20-24 decibels)
Additional Info	Anti-striation control, Inherently Thermally Protected, UL Class P, Universal voltage

Electrical characteristics

Supply Current Frequency (MIN)	50 Hz/60 Hz

Order information

10 Pack	Pallet Pack	DIY Pack	IP Pack
96720			

Dimensions

Wiring diagram – LFL PS2 – see example on page 11-21	
Case dimensions- Ref Drawing -A – see Page 11-22	
Length (L)	9.5 in (241 mm)
Width (W)	1.3 in (43 mm)
Height (H)	1.18 in (30 mm)
Mounting dimensions	
Mount Length (M)	8.9 in (226 mm)
Mount Width (X or F)	1.18 in (30 mm)
Mount Slots (MS)	0.3 in (8 mm)
Weight	1.65 lbs
Exit Type	
Remote Mounting Distance to Lamp (F32T8)	18 ft
Remote Mounting Wire Gauge	18 AWG
Lead lengths	**Length (± 1 in)**
Black	25 in (635 mm)
Blue and Red	33 in (838 mm)
White	25 in (635 mm)
Yellow	47 in (1194 mm)

Specifications by lamp and wattage

Lamp	# of Lamps	Line Volts	System Watts	Nom. Line Current	System Ballast Factor	Ballast Efficacy Factor	Power Factor% (>=)	Crest Factor (<=)	THD% (<=)	Min. Starting Temp (°F/°C)
	2	120	47	0.39 A	0.71	1.51	99	1.7	10	0/-18
	2	277	47	0.17 A	0.71	1.51	95	1.7	10	0/-18
	1	120	30	0.28 A	0.81	2.70	98	1.7	10	0/-18
F32T8	1	277	30	0.11 A	0.81	2.70	90	1.7	10	0/-18
	2	120	44	0.36 A	0.67	1.52	99	1.7	10	60/16
	2	277	44	0.16 A	0.67	1.52	95	1.7	10	60/16
	1	120	28	0.26 A	0.79	2.82	98	1.7	10	60/16
F32T8/WM	1	277	28	0.11 A	0.79	2.82	90	1.7	10	60/16
	2	120	41	0.34 A	0.65	1.58	99	1.7	10	60/16
	2	277	41	0.15 A	0.65	1.58	94	1.7	10	60/16
	1	120	26	0.24 A	0.77	2.96	98	1.7	10	60/16
F28T8	1	277	26	0.10 A	0.77	2.96	90	1.7	10	60/16
	2	277	38	0.14 A	0.73	1.92	94	1.7	16	0/-18
	2	120	37	0.31 A	0.73	1.97	99	1.7	10	0/-18
	1	277	25	0.09 A	0.86	3.44	85	1.7	16	0/-18
F25T8	1	120	24	0.23 A	0.86	3.58	97	1.7	10	0/-18

Other compatible lamps: F17T8, F32T8/25W

Safety and performance

UL Type 1 Outdoor UL Type HL UL Class P cUL Listed UL Listed Product is compliant with material restriction requirements of RoHS NEMA Premium

FCC – CLASS A Non-Consumer ANSI – C62.41

See page E-1 for warranty information.

UltraStart® T8 120–277V Programmed Start

T8 Programmed Start Ballasts For F17 (2 ft), F25 (3 ft), F32 (4 ft) Lamps

29675 – GE-232-MVPS-H

UltraStart® T8 Programmed Start

2 – F32T8 120V-277V High Light 1.15 BF <10% THD UltraStart®

- A new generation of ultra-efficient Programmed Start ballasts (> 90% efficiency)
- Extends lamp life in frequently switched applications (> 100,000 on/off cycles)
- Starting time visually the same as instant start
- Multi-voltage technology handles voltage from 120 to 277V (H and XL series)
- Parallel lamp operation means system maintenance is easier to manage
- Anti-striation circuitry reduces striations with energy saving lamps

General characteristics

Ballast Type	Electronic – Programmed / Rapid Start
Starting Method	Programmed start
Lamp Wiring	Parallel
Line Voltage Regulation (+/-)	10%
Ambient Temperature (MAX)	105°F (41°C)
Case Temperature (MAX)	70°C (158°F)
Ballast Factor	High
Power Factor Correction	Active
Sound Rating	A (20-24 decibels)
Additional Info	Auto-restart, Inherently Thermally Protected, UL Class P

Electrical characteristics

Supply Current Frequency	50 Hz/60 Hz

Order information

10 Pack	Pallet Pack	DIY Pack	IP Pack
29675	29651		

Dimensions

Wiring diagram – LFL PS2 – see example on page 11-21	
Case dimensions – Ref Drawing -A – see Page 11-22	
Length (L)	9.5 in (241 mm)
Width (W)	1.7 in (43 mm)
Height (H)	1.18 in (30 mm)
Mounting dimensions	
Mount Length (M)	8.9 in (226 mm)
Mount Width (X or F)	1.18 in (30 mm)
Mount Slots (MS)	0.3 in (8 mm)
Weight	2.40 lbs
Exit Type	Side
Remote Mounting Distance to Lamp (F32T8)	18 ft
Remote Mounting Wire Gauge	18 AWG
Lead lengths	**Length (± 1 in)**
Blue and Red	33 in (838 mm)
Black	25 in (635 mm)
White	25 in (635 mm)
Yellow	47 in (1194 mm)
Blue	33 in (838 mm)

Specifications by lamp and wattage

Lamp	# of Lamps	Line Volts	System Watts	Nom. Line Current	System Ballast Factor	Ballast Efficacy Factor	Power Factor% (>=)	Crest Factor (<=)	THD% (<=)	Min. Starting Temp (°F/°C)
	2	120	75	0.64 A	1.15	1.53	98	1.7	10	0/-18
	2	277	74	0.28 A	1.15	1.55	94	1.7	10	0/-18
	1	277	47	0.19 A	1.37	2.91	90	1.7	10	0/-18
F32T8	1	120	46	0.40 A	1.37	2.97	98	1.7	10	0/-18
	2	120	69	0.60 A	1.14	1.65	98	1.7	10	60/16
	2	277	69	0.27 A	1.14	1.65	95	1.7	10	60/16
	1	120	43	0.36 A	1.34	3.11	98	1.7	10	60/16
F32T8/WM	1	277	43	0.18 A	1.34	3.11	90	1.7	10	60/16
	2	120	63	0.54 A	1.10	1.74	94	1.7	10	60/16
	2	277	62	0.25 A	1.11	1.79	98	1.7	10	60/16
	1	277	39	0.16 A	1.29	3.30	89	1.7	10	60/16
F28T8	1	120	38	0.32 A	1.29	3.39	98	1.7	10	60/16
	2	120	59	0.50 A	1.14	1.93	98	1.7	10	0/-18
	2	277	59	0.24 A	1.14	1.93	93	1.7	16	0/-18
	1	120	37	0.32 A	1.34	3.62	98	1.7	10	0/-18
F25T8	1	277	37	0.15 A	1.34	3.62	87	1.7	21	0/-18

Other compatible lamps: F17T8, F32T8/25W

Safety and performance

UL Type 1 Outdoor UL Type HL FCC – CLASS A Non-Consumer ANSI – C62.41 FCC – CLASS A Non-Consumer ANSI – C62.41 UL Class P cUL Listed UL Listed

NEMA Premium

High Temperature Rated: Suitable for high temperature applications 70°C max case temp 5 yr warranty or 90°C max case temp 3 yr warranty.

See page E-1 for warranty information.

UltraStart® T8 120–277V Programmed Start

T8 Programmed Start Ballasts For F17 (2 ft), F25 (3 ft), F32 (4 ft) Lamps

29671 – GE-232-MVPS-XL

UltraStart® T8 Programmed Start

2 – F32T8 120V-277V Ultra Low Watt .60 BF <10% THD

- A new generation of ultra-efficient Programmed Start ballasts
- Extends lamp life in frequently switched applications (> 100,000 on/off cycles)
- Starting time visually the same as instant start
- Multi-voltage technology handles voltage from 120 to 277V (H and XL series)
- Parallel lamp operation means system maintenance is easier to manage
- Anti-striation circuitry reduces striations with energy saving lamps

General characteristics

Ballast Type	Electronic – Programmed / Rapid Start
Starting Method	Programmed start
Lamp Wiring	Parallel
Line Voltage Regulation (+/-)	10%
Ambient Temperature (MAX)	105°F (41°C)
Case Temperature (MAX)	70°C (158°F)
Ballast Factor	Ultra low
Power Factor Correction	Active
Sound Rating	A (20-24 decibels)
Additional Info	Auto-restart, Inherently Thermally Protected, UL Class P

Electrical characteristics

Supply Current Frequency	50 Hz/ 60 Hz

Order information

10 Pack	Pallet Pack	DIY Pack	IP Pack
29671			

Dimensions

Wiring diagram – LFL PS2 – see example on page 11-21	
Case dimensions – Ref Drawing -A – see Page 11-22	
Length (L)	9.5 in (241 mm)
Width (W)	1.7 in (43 mm)
Height (H)	1.18 in (30 mm)
Mounting dimensions	
Mount Length (M)	8.9 in (226 mm)
Mount Width (X or F)	1.18 in (30 mm)
Mount Slots (MS)	0.3 in (8 mm)
Weight	1.65 lbs
Exit Type	Side
Remote Mounting Distance to Lamp (F32T8)	18 ft
Remote Mounting Wire Gauge	18 AWG
Lead lengths	**Length (± 1 in)**
Blue and Red	33 in (838 mm)
White and Black	25 in (635 mm)
Yellow	47 in (1194 mm)

Specifications by lamp and wattage

Lamp	# of Lamps	Line Volts	System Watts	Nom. Line Current	System Ballast Factor	Ballast Efficacy Factor	Power Factor% (>=)	Crest Factor (<=)	THD% (<=)	Min. Starting Temp (°F/°C)
	2	120	45	0.39 A	0.60	1.33	98.0	1.7	10	0/-18
	2	277	44	0.19 A	0.60	1.36	90.0	1.7	10	0/-18
	1	277	28	0.12 A	0.70	2.50	83.0	1.7	10	0/-18
F32T8	1	120	27	0.24 A	0.70	2.59	98.0	1.7	10	0/-18
	2	120	42	0.15 A	0.59	1.40	99.0	1.7	10	60/16
	2	277	42	0.24 A	0.59	1.40	87.0	1.7	10	60/16
	1	120	27	0.22 A	0.68	2.51	0.9	1.7	10	60/16
F32T8/WM	1	277	27	0.20 A	0.68	2.51	81.0	1.7	10	60/16
	2	120	39	0.12 A	0.59	1.51	99.0	1.7	10	60/16
	2	277	39	0.15 A	0.59	1.51	86.0	1.7	10	60/16
	1	277	25	0.12 A	0.67	2.68	79.0	1.7	10	60/16
F28T8	1	120	24	0.20 A	0.67	2.68	98.0	1.7	10	60/16
	2	120	36	0.31 A	0.61	1.69	98.0	1.7	10	0/-18
	2	277	36	0.15 A	0.61	1.69	87.0	1.7	15	0/-18
	1	277	23	0.10 A	0.68	2.95	79.0	1.7	16	0/-18
F25T8	1	120	22	0.20 A	0.68	3.09	98.0	1.7	10	0/-18

Other compatible lamps: F17T8, F32T8/25W

Safety and performance

Product is compliant with material restriction requirements of RoHS UL Type 1 Outdoor ANSI – C62.41 UL Type HL NRCan FCC Part 18 Class B at 120 Volts UL Class P cUL Listed UL Listed

See page E-1 for warranty information.

UltraStart® T8 120–277V Programmed Start

T8 Programmed Start Ballasts For F17 (2 ft), F25 (3 ft), F32 (4 ft) Lamps

29676 – GE-332-MVPS-H

UltraStart® T8 Programmed Start

3 – F32T8 120V-277V High Light 1.15 BF <10% THD UltraStart®

- A new generation of ultra-efficient Programmed Start ballasts (> 90% efficiency)
- Extends lamp life in frequently switched applications (> 100,000 on/off cycles)
- Starting time visually the same as instant start
- Multi-voltage technology handles voltage from 120 to 277V (H and XL series)
- Parallel lamp operation means system maintenance is easier to manage
- Anti-striation circuitry reduces striations with energy saving lamps

General characteristics

Ballast Type	Electronic – Programmed / Rapid Start
Starting Method	Programmed start
Lamp Wiring	Parallel
Line Voltage Regulation (+/-)	10%
Ambient Temperature (MAX)	105°F (41°C)
Case Temperature (MAX)	70°C (158°F)
Ballast Factor	High
Power Factor Correction	Active
Sound Rating	A (20-24 decibels)
Additional Info	Auto-restart, Inherently Thermally Protected, UL Class P

Electrical characteristics

Supply Current Frequency	50 Hz/60 Hz

Order information

10 Pack	Pallet Pack	DIY Pack	IP Pack
29676			

Dimensions

Wiring diagram – LFL PS3 – see example on page 11-21	
Case dimensions – Ref Drawing -A – see Page 11-22	
Length (L)	9.5 in (241 mm)
Width (W)	1.7 in (43 mm)
Height (H)	1.18 in (30 mm)
Mounting dimensions	
Mount Length (M)	8.9 in (226 mm)
Mount Width (X or F)	1.18 in (30 mm)
Mount Slots (MS)	0.3 in (8 mm)
Weight	2.40 lbs
Exit Type	Side
Remote Mounting Distance to Lamp (F32T8)	18 ft
Remote Mounting Wire Gauge	18 AWG
Lead lengths	**Length (± 1 in)**
White and Black	25 in (635 mm)
Blue and Red	33 in (838 mm)
Red/White	33 in (838 mm)
Yellow	47 in (1194 mm)

Specifications by lamp and wattage

Lamp	# of Lamps	Line Volts	System Watts	Nom. Line Current	System Ballast Factor	Ballast Efficacy Factor	Power Factor% (>=)	Crest Factor (<=)	THD% (<=)	Min. Starting Temp (°F/°C)
	3	120	110	0.95 A	1.15	1.04	98	1.7	10	0/-18
	3	277	108	0.41 A	1.15	1.06	96	1.7	10	0/-18
	2	120	82	0.70 A	1.28	1.56	98	1.7	10	0/-18
F32T8	2	277	82	0.32 A	1.28	1.56	94	1.7	10	0/-18
	3	120	102	0.88 A	1.13	1.10	99	1.7	10	60/16
	3	277	100	0.39 A	1.14	1.14	96	1.7	10	60/16
	2	120	77	0.64 A	1.26	1.63	98	1.7	10	60/16
F32T8/WM	2	277	76	0.30 A	1.26	1.65	95	1.7	10	60/16
	3	120	92	0.79 A	1.09	1.18	99	1.7	10	60/16
	3	277	91	0.35 A	1.10	1.20	96	1.7	10	60/16
	2	277	69	0.27 A	1.23	1.78	94	1.7	10	60/16
F28T8	2	120	68	0.58 A	1.23	1.81	98	1.7	10	60/16
	3	120	86	0.74 A	1.14	1.32	98	1.7	10	0/-18
	3	277	85	0.33 A	1.14	1.34	96	1.7	14	0/-18
	2	120	65	0.56 A	1.25	1.92	98	1.7	10	0/-18
F25T8	2	277	64	0.26 A			93	1.7	16	0/-18

Other compatible lamps: F17T8, F32T8/25W

Safety and performance

UL Type 1 Outdoor UL Type HL Product is compliant with material restriction requirements of RoHS FCC – CLASS A Non-Consumer ANSI – C62.41 UL Class P cUL Listed UL Listed NEMA Premium

High Temperature Rated: Suitable for high temperature applications 70°C max case temp 5 yr warranty or 90°C max case temp 3 yr warranty.

See page E-1 for warranty information.

UltraStart® T8 120–277V Programmed Start

T8 Programmed Start Ballasts For F17 (2 ft), F25 (3 ft), F32 (4 ft) Lamps

96715 – GE332-MVPS-N

UltraStart® T8 Programmed Start

3 – F32T8 120V-277V Normal Light .88 BF <10% THD UltraStart®

- A new generation of ultra-efficient Programmed Start ballasts (> 90% efficiency)
- Anti-striation circuitry reduces striations with energy saving lamps
- Extends lamp life in frequently switched applications (> 100,000 on/off cycles)
- Parallel lamp operation means system maintenance is easier to manage
- Starting time visually the same as instant start

General characteristics

Ballast Type	Electronic – Programmed / Rapid Start
Starting Method	Programmed start
Lamp Wiring	Parallel
Line Voltage Regulation (+/-)	10%
Ambient Temperature (MAX)	104°F (40°C)
Case Temperature (MAX)	70°C (158°F)
Ballast Factor	Normal
Power Factor Correction	Active
Sound Rating	A (20-24 decibels)
Additional Info	Anti-striation control, TCLP compliant, Inherently Thermally Protected, UL Class P, Universal voltage

Electrical characteristics

Supply Current Frequency (MIN)	50 Hz/60 Hz

Order information

10 Pack	Pallet Pack	DIY Pack	IP Pack
96715			

Dimensions

Wiring diagram – LFL PS3 – see example on page 11-21	
Case dimensions – Ref Drawing -A – see Page 11-22	
Length (L)	9.5 in (241 mm)
Width (W)	1.7 in (43 mm)
Height (H)	1.18 in (30 mm)
Mounting dimensions	
Mount Length (M)	8.9 in (226 mm)
Mount Width (X or F)	1.18 in (30 mm)
Mount Slots (MS)	0.3 in (8 mm)
Weight	1.65 lbs
Exit Type	Side
Remote Mounting Distance to Lamp (F32T8)	18 ft
Remote Mounting Wire Gauge	18 AWG
Lead lengths	**Length (± 1 in)**
White and Black	25 in (635 mm)
Blue and Red	33 in (838 mm)
Red/White	33 in (838 mm)
Yellow	47 in (1194 mm)

Specifications by lamp and wattage

Lamp	# of Lamps	Line Volts	System Watts	Nom. Line Current	System Ballast Factor	Ballast Efficacy Factor	Power Factor% (>=)	Crest Factor (<=)	THD% (<=)	Min. Starting Temp (°F/°C)
	3	120	86	0.72 A	0.89	1.03	99	1.7	10	0/-18
	3	277	84	0.30 A	0.89	1.05	97	1.7	10	0/-18
	2	120	66	0.54 A	0.98	1.48	98	1.7	10	0/-18
F32T8	2	277	65	0.24 A	0.98	1.50	95	1.7	10	0/-18
	3	120	80	0.66 A	0.86	1.07	99	1.7	10	60/16
	3	277	79	0.28 A	0.86	1.08	97	1.7	10	60/16
	2	120	61	0.51 A	0.96	1.57	98	1.7	10	60/16
F32T8/WM	2	277	61	0.22 A	0.96	1.57	95	1.7	10	60/16
	3	120	73	0.61 A	0.84	1.15	99	1.7	10	60/16
	3	277	72	0.26 A	0.84	1.16	97	1.7	10	60/16
	2	120	57	0.47 A	0.93	1.63	98	1.7	10	60/16
F28T8	2	277	57	0.21 A	0.93	1.63	95	1.7	10	60/16

Other compatible lamps: F17T8, F25T8, F32T8/25W

Safety and performance

Product is compliant with material restriction requirements of RoHS UL Type 1 Outdoor ANSI – C62.41 UL Type HL FCC – CLASS A Non-Consumer UL Class P UL Listed NEMA Premium

96721 – GE332-MVPS-L

UltraStart® T8 Programmed Start

3 – F32T8 120V-277V Low Watts .71 BF <10% THD UltraStart®

- A new generation of ultra-efficient Programmed Start ballasts (> 90% efficiency)
- Anti-striation circuitry reduces striations with energy saving lamps
- Extends lamp life in frequently switched applications (> 100,000 on/off cycles)
- Multi-voltage technology handles voltage from 120 to 277V
- Parallel lamp operation means system maintenance is easier to manage

General characteristics

Ballast Type	Electronic – Programmed / Rapid Start
Starting Method	Programmed start
Lamp Wiring	Parallel
Line Voltage Regulation (+/-)	10%
Ambient Temperature (MAX)	104°F (40°C)
Case Temperature (MAX)	70°C (158°F)
Ballast Factor	Low
Power Factor Correction	Active
Sound Rating	A (20-24 decibels)
Additional Info	Anti-striation control, Inherently Thermally Protected, UL Class P, Universal voltage

Electrical characteristics

Supply Current Frequency (MIN)	50 Hz/60 Hz

Order information

10 Pack	Pallet Pack	DIY Pack	IP Pack
96721			

Dimensions

Wiring diagram – LFL PS3 – see example on page 11-21	
Case dimensions – Ref Drawing -A – see Page 11-22	
Length (L)	9.5 in (241 mm)
Width (W)	1.7 in (43 mm)
Height (H)	1.18 in (30 mm)
Mounting dimensions	
Mount Length (M)	8.9 in (226 mm)
Mount Width (X or F)	1.18 in (30 mm)
Mount Slots (MS)	0.3 in (8 mm)
Weight	1.65 lbs
Exit Type	Side
Remote Mounting Distance to Lamp (F32T8)	18 ft
Remote Mounting Wire Gauge	18 AWG
Lead lengths	**Length (± 1 in)**
White and Black	25 in (635 mm)
Blue and Red	33 in (838 mm)
Red/White	33 in (838 mm)
Yellow	47 in (1194 mm)

Specifications by lamp and wattage

Lamp	# of Lamps	Line Volts	System Watts	Nom. Line Current	System Ballast Factor	Ballast Efficacy Factor	Power Factor% (>=)	Crest Factor (<=)	THD% (<=)	Min. Starting Temp (°F/°C)
	3	120	69	0.60 A	0.71	1.02	99	1.7	10	0/-18
	3	277	68	0.26 A	0.71	1.04	96	1.7	10	0/-18
	2	120	52	0.45 A	0.77	1.48	98	1.7	10	0/-18
F32T8	2	277	52	0.19 A	0.77	1.48	92	1.7	10	0/-18
	3	120	63	0.54 A	0.67	1.06	99	1.7	10	60/16
	3	277	62	0.24 A	0.67	1.08	95	1.7	10	60/16
	2	120	48	0.40 A	0.75	1.56	98	1.7	10	60/16
F32T8/WM	2	277	48	0.18 A	0.75	1.56	92	1.7	10	60/16
	3	120	58	0.49 A	0.66	1.13	99	1.7	10	60/16
	3	277	58	0.22 A	0.66	1.13	95	1.7	10	60/16
	2	120	45	0.38 A	0.74	1.64	98	1.7	10	60/16
F28T8	2	277	45	0.17 A	0.74	1.64	92	1.7	10	60/16
	3	277	58	0.22 A	0.66	1.13	95	1.7	15	0/-18
	3	120	54	0.45 A	0.74	1.37	99	1.7	10	0/-18
	2	120	41	0.35 A	0.82	2.00	98	1.7	10	0/-18
F25T8	2	277	0.158	90.0 A	0.82	2.00	0.82	1.7	15	0/-18

Other compatible lamps: F17T8, F32T8/25W

Safety and performance

UL Type 1 Outdoor UL Type HL Product is compliant with material restriction requirements of RoHS FCC – CLASS A Non-Consumer UL Class P ANSI – C62.41

See page E-1 for warranty information. cUL Listed UL Listed NEMA Premium

UltraStart® T8 120–277V Programmed Start

T8 Programmed Start Ballasts For F17 (2 ft), F25 (3 ft), F32 (4 ft) Lamps

29672 – GE-332-MVPS-XL

UltraStart® T8 Programmed Start

3 – F32T8 120V-277V Ultra Low Watt .60 BF <10% THD

- A new generation of ultra-efficient Programmed Start ballasts (> 90% efficiency)
- Extends lamp life in frequently switched applications (> 100,000 on/off cycles)
- Starting time visually the same as instant start
- Multi-voltage technology handles voltage from 120 to 277V (H and XL series)
- Parallel lamp operation means system maintenance is easier to manage
- Anti-striation circuitry reduces striations with energy saving lamps

General characteristics

Ballast Type	Electronic – Programmed / Rapid Start
Starting Method	Programmed start
Lamp Wiring	Parallel
Line Voltage Regulation (+/-)	10%
Ambient Temperature (MAX)	105°F (41°C)
Case Temperature (MAX)	70°C (158°F)
Ballast Factor	Ultra low
Power Factor Correction	Active
Sound Rating	A (20-24 decibels)
Additional Info	Auto-restart, Inherently Thermally Protected, UL Class P

Electrical characteristics

Supply Current Frequency	50 Hz/60 Hz

Order information

10 Pack	Pallet Pack	DIY Pack	IP Pack
29672			

Dimensions

Wiring diagram – LFL PS3 – see example on page 11-21	
Case dimensions – Ref Drawing -A – see Page 11-22	
Length (L)	9.5 in (241 mm)
Width (W)	1.7 in (43 mm)
Height (H)	1.18 in (30 mm)
Mounting dimensions	
Mount Length (M)	8.9 in (226 mm)
Mount Width (X or F)	1.18 in (30 mm)
Mount Slots (MS)	0.3 in (8 mm)
Weight	1.65 lbs
Exit Type	Side
Remote Mounting Distance to Lamp (F32T8)	18 ft
Remote Mounting Wire Gauge	18 AWG
Lead lengths	**Length (± 1 in)**
White and Black	25 in (635 mm)
Blue and Red	33 in (838 mm)
Red/White	33 in (838 mm)
Yellow	47 in (1194 mm)

Specifications by lamp and wattage

Lamp	# of Lamps	Line Volts	System Watts	Nom. Line Current	System Ballast Factor	Ballast Efficacy Factor	Power Factor% (>=)	Crest Factor (<=)	THD% (<=)	Min. Starting Temp (°F/°C)
	3	120	67	0.58 A	0.60	0.89	98	1.7	10	0/-18
	3	277	66	0.26 A	0.60	0.90	93	1.7	10	0/-18
	2	277	50	0.21 A	0.64	1.28	92	1.7	10	0/-18
F32T8	2	120	49	0.42 A	0.64	1.30	98	1.7	10	0/-18
	3	120	61	0.53 A	0.59	0.96	99	1.7	10	60/16
	3	277	60	0.24 A	0.59	0.98	94	1.7	10	60/16
	2	120	45	0.04 A	0.64	1.42	98	1.7	10	60/16
F32T8/WM	2	277	45	0.18 A	0.64	1.42	92	1.7	10	60/16
	3	120	57	0.49 A	0.58	1.01	99	1.7	10	60/16
	3	277	56	0.22 A	0.58	1.03	94	1.7	10	60/16
	2	120	42	0.35 A	0.63	1.50	98	1.7	10	60/16
F28T8	2	277	42	0.17 A	0.63	1.50	91	1.7	10	60/16
	3	120	53	0.45 A	0.60	1.13	98	1.7	10	0/-18
	3	277	53	0.21 A	0.60	1.13	92	1.7	13	0/-18
	2	120	40	0.35 A	0.64	1.60	98	1.7	10	0/-18
F25T8	2	277	40	0.16 A	0.64	1.60	89	1.7	14	0/-18

Other compatible lamps: F17T8, F32T8/25W

Safety and performance

UL Type 1 Outdoor UL Type HL Product is compliant with material restriction requirements of RoHS FCC – CLASS A Non-Consumer UL Class P UL Listed ANSI – C62.41 cUL Listed

29625 – GE-432-120-PS-N

UltraStart® T8 Programmed Start

4 – F32T8 120V Normal Light .87 BF <10% THD UltraStart®

- A new generation of ultra-efficient Programmed Start ballasts (> 90% efficiency)
- Extends lamp life in frequently switched applications (> 100,000 on/off cycles)
- Starting time visually the same as instant start
- Multi-voltage technology handles voltage from 120 to 277V (H and XL series)
- Parallel lamp operation means system maintenance is easier to manage

General characteristics

Ballast Type	Electronic – Programmed / Rapid Start
Starting Method	Programmed start
Lamp Wiring	Parallel
Line Voltage Regulation (+/-)	10%
Ambient Temperature (MAX)	105°F (41°C)
Case Temperature (MAX)	70°C (158°F)
Ballast Factor	Normal
Power Factor Correction	Active
Sound Rating	A (20-24 decibels)
Additional Info	Auto-restart, Inherently Thermally Protected, UL Class P

Electrical characteristics

Supply Current Frequency	50 Hz/60 Hz

Order information

10 Pack	Pallet Pack	DIY Pack	IP Pack
29625	29635		

Dimensions

Wiring diagram – LFL PS4 – see example on page 11-21	
Case dimensions – Ref Drawing -A – see Page 11-22	
Length (L)	9.5 in (241 mm)
Width (W)	1.7 in (43 mm)
Height (H)	1.18 in (30 mm)
Mounting dimensions	
Mount Length (M)	8.9 in (226 mm)
Mount Width (X or F)	1.18 in (30 mm)
Mount Slots (MS)	0.3 in (8 mm)
Weight	1.65 lbs
Exit Type	Side
Remote Mounting Distance to Lamp (F32T8)	18 ft
Remote Mounting Wire Gauge	18 AWG
Lead lengths	**Length (± 1 in)**
White and Black	25 in (635 mm)
Blue and Red	33 in (838 mm)
Blue/White	33 in (838 mm)
Red/White	33 in (838 mm)
Yellow	47 in (1194 mm)

Specifications by lamp and wattage

Lamp	# of Lamps	Line Volts	System Watts	Nom. Line Current	System Ballast Factor	Ballast Efficacy Factor	Power Factor% (>=)	Crest Factor (<=)	THD% (<=)	Min. Starting Temp (°F/°C)
	4	120	112	0.95 A	0.89	0.79	99	1.7	10	0/-18
F32T8	3	120	92	0.79 A	0.96	1.04	99	1.7	10	0/-18
	4	120	106	0.92 A	0.87	0.82	99	1.7	10	60/16
F32T8/WM	3	120	87	0.75 A	0.94	1.08	99	1.7	10	60/16
	4	120	96	0.83 A	0.84	0.87	99	1.7	10	60/16
F28T8	3	120	79	0.68 A	0.91	1.15	99	1.7	10	60/16
	4	120	87	0.75 A	0.88	1.01	99	1.7	10	0/-18
F25T8	3	120	73	0.63 A	0.95	1.30	99	1.7	10	0/-18
	4	120	61	0.53 A	0.89	1.45	99	1.7	10	50/10
F17T8	3	120	51	0.44 A	0.96	1.88	99	1.7	10	0/-18

Other compatible lamps: F32T8/25W

Safety and performance

Product is compliant with material restriction requirements of RoHS UL Type 1 Outdoor UL Type HL ANSI – C62.41 FCC – CLASS A Non-Consumer NEMA Premium UL Class P cUL Listed UL Listed

See page E-1 for warranty information.

UltraStart® T8 120–277V Programmed Start

T8 Programmed Start Ballasts For F17 (2 ft), F25 (3 ft), F32 (4 ft) Lamps

96716 – GE432-MVPS-N

UltraStart® T8 Programmed Start

4 F32T8 120V-277V Normal Light .88 BF <10% THD UltraStart®

- A new generation of ultra-efficient Programmed Start ballasts (> 90% efficiency)
- Anti-striation circuitry reduces striations with energy saving lamps
- Extends lamp life in frequently switched applications (> 100,000 on/off cycles)
- Multi-voltage technology handles voltage from 120 to 277V
- Parallel lamp operation means system maintenance is easier to manage

General characteristics

Ballast Type	Electronic – Programmed / Rapid Start
Starting Method	Rapid start
Lamp Wiring	Parallel
Line Voltage Regulation (+/-)	10%
Ambient Temperature (MAX)	104°F (40°C)
Case Temperature (MAX)	70°C (158°F)
Ballast Factor	Normal
Power Factor Correction	Active
Sound Rating	A (20-24 decibels)
Additional Info	Inherently Thermally Protected, UL Class P, Universal voltage

Electrical characteristics

Supply Current Frequency (MIN)	50 Hz/ 60 Hz

Order information

10 Pack	Pallet Pack	DIY Pack	IP Pack
96716			

Dimensions

Wiring diagram – LFL PS4 – see example on page 11-21	
Case dimensions – Ref Drawing -A – see Page 11-22	
Length (L)	9.5 in (241 mm)
Width (W)	1.7 in (43 mm)
Height (H)	1.18 in (30 mm)
Mounting dimensions	
Mount Length (M)	8.9 in (226 mm)
Mount Width (X or F)	1.18 in (30 mm)
Mount Slots (MS)	0.3 in (8 mm)
Weight	1.65 lbs
Exit Type	Side
Remote Mounting Distance to Lamp (F32T8)	18 ft
Remote Mounting Wire Gauge	18 AWG
Lead lengths	**Length (± 1 in)**
White and Black	25 in (635 mm)
Blue and Red	33 in (838 mm)
Blue/White	33 in (838 mm)
Red/White	33 in (838 mm)
Yellow	47 in (1194 mm)

Specifications by lamp and wattage

Lamp	# of Lamps	Line Volts	System Watts	Nom. Line Current	System Ballast Factor	Ballast Efficacy Factor	Power Factor% (>=)	Crest Factor (<=)	THD% (<=)	Min. Starting Temp (°F/°C)
	4	120	114	0.97 A	0.89	0.78	99	1.7	10	0/-18
	4	277	112	0.41 A	0.89	0.79	97	1.7	10	0/-18
	3	120	93	0.78 A	0.96	1.03	98	1.7	10	0/-18
F32T8	3	277	92	0.34 A	0.96	1.04	95	1.7	10	0/-18
	4	120	105	0.88 A	0.86	0.81	99	1.7	10	60/16
	4	277	103	0.37 A	0.86	0.83	97	1.7	10	60/16
	3	120	86	0.72 A	0.94	1.09	98	1.7	10	60/16
F32T8/WM	3	277	85	0.31 A	0.94	1.10	95	1.7	10	60/16
	4	120	96	0.81 A	0.83	0.86	99	1.7	10	60/16
	4	277	95	0.35 A	0.83	0.87	97	1.7	10	60/16
	3	120	79	0.66 A	0.92	1.16	98	1.7	10	60/16
F28T8	3	277	78	0.29 A	0.92	1.17	95	1.7	10	60/16

Other compatible lamps: F17T8, F25T8, F32T8/25W

Safety and performance

Product is compliant with material restriction requirements of RoHS UL Type 1 Outdoor UL Type HL ANSI – C62.41 FCC – CLASS A Non-Consumer UL Class P UL Listed NEMA Premium

71832 – GE432-MVPS-L

UltraStart® T8 Programmed Start

4 – F32T8 120V-277V Low Watts .71 BF <10% THD UltraStart®

- A new generation of ultra-efficient Programmed Start ballasts (> 90% efficiency)
- Anti-striation circuitry reduces striations with energy saving lamps
- Extends lamp life in frequently switched applications (> 100,000 on/off cycles)
- Multi-voltage technology handles voltage from 120 to 277V
- Parallel lamp operation means system maintenance is easier to manage

General characteristics

Ballast Type	Electronic – Programmed / Rapid Start
Starting Method	Programmed start
Lamp Wiring	Parallel
Line Voltage Regulation (+/-)	10%
Ambient Temperature (MAX)	104°F (40°C)
Case Temperature (MAX)	70°C (158°F)
Ballast Factor	Low – PS
Power Factor Correction	Active
Sound Rating	A (20-24 decibels)
Additional Info	Inherently Thermally Protected, UL Class P, Universal voltage

Electrical characteristics

Supply Current Frequency	50 Hz
Supply Current Frequency (MIN)	50 Hz/60 Hz

Order information

10 Pack	Pallet Pack	DIY Pack	IP Pack
71832			

Dimensions

Wiring diagram – LFL PS4 – see example on page 11-21	
Case dimensions – Ref Drawing -A – see Page 11-22	
Length (L)	9.5 in (241 mm)
Width (W)	1.7 in (43 mm)
Height (H)	1.18 in (30 mm)
Mounting dimensions	
Mount Length (M)	8.9 in (226 mm)
Mount Width (X or F)	1.18 in (30 mm)
Mount Slots (MS)	0.3 in (8 mm)
Weight	1.65 lbs
Exit Type	Side
Remote Mounting Distance to Lamp (F32T8)	18 ft
Remote Mounting Wire Gauge	18 AWG
Lead lengths	**Length (± 1 in)**
White and Black	25 in (635 mm)
Blue and Red	33 in (838 mm)
Blue/White	33 in (838 mm)
Red/White	33 in (838 mm)
Yellow	47 in (1194 mm)

Specifications by lamp and wattage

Lamp	# of Lamps	Line Volts	System Watts	Nom. Line Current	System Ballast Factor	Ballast Efficacy Factor	Power Factor% (>=)	Crest Factor (<=)	THD% (<=)	Min. Starting Temp (°F/°C)
	4	120	90	0.39 A	0.71	0.78	1	1.7	10	0/-18
	4	277	88	0.32 A	0.71	0.80	1	1.7	10	0/-18
	3	120	72	0.68 A	0.58	0.81	1	1.7	10	0/-18
F32T8	3	277	71	0.78 A	0.58	0.82	1	1.7	10	0/-18
	4	120	85	0.71 A	0.69	0.81	1	1.7	10	60/16
	4	277	83	0.30 A	0.69	0.83	1	1.7	10	60/16
	3	120	68	0.58 A	0.57	0.84	1	1.7	10	60/16
F32T8/WM	3	277	67	0.26 A	0.57	0.85	1	1.7	10	60/16
	4	120	77	0.64 A	0.68	0.88	1	1.7	10	60/16
	4	277	76	0.28 A	0.68	0.89	1	1.7	10	60/16
	3	120	63	0.53 A	0.55	0.88	1	1.7	10	60/16
F28T8	3	277	63	0.23 A	0.55	0.88	1	1.7	10	60/16

Other compatible lamps: F17T8, F25T8, F32T8/25W

Safety and performance

Product is compliant with material restriction requirements of RoHS UL Type 1 Outdoor ANSI – C62.41 UL Type HL FCC – CLASS A Non-Consumer UL Class P UL Listed NEMA Premium

See page E-1 for warranty information.

UltraStart® T8 120–277V Programmed Start

T8 Programmed Start Ballasts For F17 (2 ft), F25 (3 ft), F32 (4 ft) Lamps

74476 – GE-432-MVPS-H (replaces 29678)

UltraStart® T8 Programmed Start

4 – F32T8 120V-277V High Light 1.15 BF <10% THD UltraStart®

- A new generation of ultra-efficient Programmed Start ballasts (> 90% efficiency)
- Extends lamp life in frequently switched applications (> 100,000 on/off cycles)
- Starting time visually the same as instant start
- Multi-voltage technology handles voltage from 120 to 277V
- Parallel lamp operation means system maintenance is easier to manage
- Anti-striation circuitry reduces striations with energy saving lamps

General characteristics

Ballast Type	Electronic – Programmed / Rapid Start
Starting Method	Programmed start
Lamp Wiring	Parallel
Line Voltage Regulation (+/-)	10%
Ambient Temperature (MAX)	105°F (41°C)
Case Temperature (MAX)	70°C (158°F)
Ballast Factor	High
Power Factor Correction	Active
Sound Rating	A (20-24 decibels)
Additional Info	Auto-restart, Inherently Thermally Protected, UL Class P

Electrical characteristics

Supply Current Frequency	50 Hz/60 Hz

Order information

10 Pack	Pallet Pack	DIY Pack	IP Pack
74476	74477 (replaces 29657)		

Dimensions

Wiring diagram – LFL PS4 – see example on page 11-21	
Case dimensions – Ref Drawing LG – see Page 11-22	
Length (L)	9.5 in (241 mm)
Width (W)	2.4 in (61 mm)
Height (H)	1.6 in (40 mm)
Mounting dimensions	
Mount Length (M)	8.9 in (226 mm)
Mount Width (X or F)	1.7 in (43 mm)
Mount Slots (MS)	0.3 in (8 mm)
Weight	3.10 lbs
Exit Type	Side
Remote Mounting Distance to Lamp (F32T8)	18 ft
Remote Mounting Wire Gauge	18 AWG
Lead lengths	**Length (± 1 in)**
White	25 in (635 mm)
Black	25 in (635 mm)
Red	33 in (838 mm)
Red/White	33 in (838 mm)
Blue	33 in (838 mm)
Blue/White	33 in (838 mm)
Yellow	47 in (1194 mm)

Specifications by lamp and wattage

Lamp	# of Lamps	Line Volts	System Watts	Nom. Line Current	System Ballast Factor	Ballast Efficacy Factor	Power Factor% (>=)	Crest Factor (<=)	THD% (<=)	Min. Starting Temp (°F/°C)
	4	120	147	1.27 A	1.16	0.79	99	1.7	10	0/-18
	4	277	144	0.55 A	1.16	0.81	99	1.7	10	0/-18
	3	120	120	1.03 A	1.26	1.05	99	1.7	10	0/-18
F32T8	3	277	120	0.45 A	1.26	1.05	99	1.7	10	0/-18
	4	120	139	1.20 A	1.15	0.83	99	1.7	10	50/10
	4	277	136	0.52 A	1.15	0.85	99	1.7	10	50/10
	3	120	114	0.95 A	1.24	1.08	99	1.7	10	50/10
F32T8/WM	3	277	112	0.43 A	1.24	1.11	99	1.7	10	50/10
	4	120	125	1.08 A	1.12	0.90	99	1.7	10	50/10
	4	277	123	0.47 A	1.12	0.91	99	1.7	10	50/10
	3	120	103	0.86 A	1.21	1.17	99	1.7	10	50/10
F28T8	3	277	101	0.39 A	1.21	1.20	99	1.7	10	50/10
	4	120	112	0.94 A	1.12	1.00	99	1.7	10	50/10
	4	277	111	0.42 A	1.12	1.01	99	1.7	10	50/10
	3	120	92	0.79 A	1.21	1.32	99	1.7	10	50/10
F32T8/25W	3	277	91	0.35 A	1.21	1.33	99	1.7	10	50/10
	4	120	117	1.00 A	1.15	0.98	99	1.7	10	0/-18
	4	277	115	0.44 A	1.15	1.00	99	1.7	10	0/-18
	3	120	97	0.83 A	1.23	1.27	99	1.7	10	0/-18
F25T8	3	277	96	0.37 A	1.23	1.28	99	1.7	10	0/-18
	4	120	81	0.69 A	1.15	1.42	99	1.7	10	0/-18
	4	277	80	0.31 A	1.15	1.44	98	1.7	10	0/-18
	3	120	67	0.58 A	1.23	1.84	99	1.7	10	0/-18
F17T8	3	277	67	0.26 A	1.23	1.84	99	1.7	10	0/-18

Safety and performance

Product is compliant with material restriction requirements of RoHS ANSI – C62.41 UL Type 1 Outdoor UL Type HL FCC – CLASS A Non-Consumer UL Class P

cUL Listed UL Listed NEMA Premium

High Temperature Rated: Suitable for high temperature applications 70°C max case temp 5 yr warranty or 90°C max case temp 3 yr warranty.

See page E-1 for warranty information.

UltraStart® T8 120–277V Programmed Start

T8 Programmed Start Ballasts For F17 (2 ft), F25 (3 ft), F32 (4 ft) Lamps

62721 - GE232PS347-L

UltraStart® T8 Programmed Start

2 or 1 F32T8 347V Low Watt .71 BF UltraStart®

- A new generation of ultra-efficient Programmed Start ballasts (> 90% efficiency)
- Extends lamp life in frequently switched applications (> 100,000 on/off cycles)
- Starting time visually the same as instant start
- Parallel lamp operation means system maintenance is easier to manage
- Anti-striation circuitry reduces striations with energy saving lamps
- < 10% THD, > 99% power factor

General characteristics

Ballast Type	Electronic – Program / Rapid Start
Starting Method	Programmed start
Lamp Wiring	Parallel
Line Voltage Regulation (+/-)	10%
Ambient Temperature (MAX)	
Case Temperature (MAX)	70°C (158°F)
Ballast Factor	Low-PS (.71)
Power Factor Correction	Active
Sound Rating	A (20-24 decibels)
Additional Info	Anti-striation control, Thermally protected, Universal voltage, TCLP compliant, Auto-restart

Electrical characteristics

Supply Current Frequency	60 Hz
Supply Current Frequency (MIN)	50 Hz/60 Hz

Order information

10 Pack	Pallet Pack	DIY Pack	IP Pack
62721			

Dimensions

Wiring diagram – LFL PS2 – see example on page 11-21	
Case dimensions – Ref Drawing -A – see page 11-22	
Length (L)	9.5 in (241 mm)
Width (W)	1.7 in (43 mm)
Height (H)	1.2 in (30 mm)
Mounting dimensions	
Mount Length (M)	8.9 in (226 mm)
Mount Width (X or F)	1.1 in (29 mm)
Mount Slots (MS)	0.3 in (8 mm)
Weight	1.65 lbs
Exit Type	Side
Remote Mounting Distance to Lamp (F32T8)	18 ft
Remote Mounting Wire Gauge	18 AWG
Lead lengths	**Length (± 1 in)**
Black	25 in (635 mm)
White	25 in (635 mm)
Blue	33 in (838 mm)
Red	33 in (838 mm)
Yellow	47 in (1194 mm)

Specifications by lamp and wattage

Lamp	# of Lamps	Line Volts	System Watts	Nom. Line Current	System Ballast Factor	Ballast Efficacy Factor	Power Factor% (>=)	Crest Factor (<=)	THD% (<=)	Min. Starting Temp (°F/°C)
F40T8	2	347	36	0.11 A	0.81		95	1.7	10	60/16
	2	347	27	0.08 A	0.83		95	1.7	12	60/16
F32T8/WM	1	347	43	0.13 A	0.71		95	1.7	10	60/16
	2	347	24	0.07 A	0.77		95	1.7	12	60/16
F32T8/25W	1	347	37	0.11 A	0.71		95	1.7	10	60/16
	2	347	29	0.09 A	0.85		95	1.7	12	0/-18
	2	347	25	0.08 A	0.80		95	1.7	12	60/16
	1	347	47	0.14 A	0.71		95	1.7	10	0/-18
F32T8	1	347	40	0.12 A	0.71		95	1.7	10	60/16
	2	347	32	0.10 A	0.71		95	1.7	15	60/16
F25T8/WM	1	347	21	0.07 A	0.78		90	1.7	15	0/-18
	2	347	24	0.08 A	0.85		95	1.7	12	0/-18
F25T8	1	347	37	0.11 A	0.72		95	1.7	10	0/-18
	2	347	24	0.07 A	0.71		90	1.7	12	60/16
	2	347	18	0.06 A	0.84		95	1.7	15	0/-18
	1	347	17	0.06 A	0.78		90	1.7	15	0/-18
F17T8	1	347	27	0.08 A	0.72		95	1.7	15	0/-18

Safety and performance

Product is compliant with material restriction requirements of RoHS ANSI – C62.41 UL Type 1 Outdoor UL Type HL FCC – CLASS A Non-Consumer UL Class P cUL Listed UL Listed NRCan

High Temperature Rated: Suitable for high temperature applications 70°C max case temp 5 yr warranty or 90°C max case temp 3 yr warranty.

See page E-1 for warranty information.

UltraStart® T8 120–277V Programmed Start

T8 Programmed Start Ballasts For F17 (2 ft), F25 (3 ft), F32 (4 ft) Lamps

62722 - GE432PS347-L

UltraStart® T8 Programmed Start

4 or 3 F32T8 347V Low Watt .71 BF UltraStart®

- A new generation of ultra-efficient Programmed Start ballasts (> 90% efficiency)
- Extends lamp life in frequently switched applications (> 100,000 on/off cycles)
- Starting time visually the same as instant start
- Parallel lamp operation means system maintenance is easier to manage
- Anti-striation circuitry reduces striations with energy saving lamps
- < 10% THD, > 99% power factor

General characteristics

Ballast Type	Electronic – Program / Rapid Start
Starting Method	Programmed start
Lamp Wiring	Parallel
Line Voltage Regulation (+/-)	10%
Ambient Temperature (MAX)	
Case Temperature (MAX)	70°C (158°F)
Ballast Factor	Low-PS (.71)
Power Factor Correction	Active
Sound Rating	A (20-24 decibels)
Additional Info	Anti-striation control, Thermally protected, Universal voltage, TCLP compliant, Auto-restart

Electrical characteristics

Supply Current Frequency	60 Hz
Supply Current Frequency (MIN)	50 Hz/60 Hz

Order information

10 Pack	Pallet Pack	DIY Pack	IP Pack
62722			

Dimensions

Wiring diagram – LFL PS4 – see example on page 11-21	
Case dimensions – Ref Drawing -A – see page 11-22	
Length (L)	9.5 in (241 mm)
Width (W)	1.7 in (43 mm)
Height (H)	1.2 in (30 mm)
Mounting dimensions	
Mount Length (M)	8.9 in (226 mm)
Mount Width (X or F)	1.1 in (29 mm)
Mount Slots (MS)	0.3 in (8 mm)
Weight	1.65 lbs
Exit Type	Side
Remote Mounting Distance to Lamp (F32T8)	18 ft
Remote Mounting Wire Gauge	18 AWG
Lead lengths	**Length (± 1 in)**
Black	25 in (635 mm)
White	25 in (635 mm)
Blue	33 in (838 mm)
Blue/White	33 in (838 mm)
Red	33 in (838 mm)
Red/White	33 in (838 mm)
Yellow	47 in (1194 mm)

Specifications by lamp and wattage

Lamp	# of Lamps	Line Volts	System Watts	Nom. Line Current	System Ballast Factor	Ballast Efficacy Factor	Power Factor% (>=)	Crest Factor (<=)	THD% (<=)	Min. Starting Temp (°F/°C)
F40T8	3	347	90	0.27 A	0.74		95	1.7	10	60/16
	4	347	83	0.25 A	0.71		95	1.7	10	60/16
F32T8/WM	3	347	69	0.21 A	0.79		95	1.7	10	60/16
	4	347	69	0.21 A	0.71		95	1.7	10	60/16
F32T8/25W	3	347	58	0.17 A	0.73		95	1.7	10	60/16
	4	347	88	0.27 A	0.71		95	1.7	10	0/-18
F32T8	3	347	76	0.22 A	0.79		95	1.7	10	0/-18
	4	347	76	0.23 A	0.71		95	1.7	10	60/16
F28T8	3	347	63	0.19 A	0.76		95	1.7	10	60/16
	4	347	71	0.21 A	0.72		95	1.7	10	0/-18
F25T8	3	347	59	0.18 A	0.78		95	1.7	10	0/-18
	4	347	51	0.15 A	0.72		95	1.7	10	0/-18
F17T8	3	347	43	0.13 A	0.78		95	1.7	10	0/-18

Safety and performance

Product is compliant with material restriction requirements of RoHS ANSI – C62.41 UL Type 1 Outdoor UL Type HL FCC – CLASS A Non-Consumer UL Class P

cUL Listed UL Listed NEMA Premium NRCan

High Temperature Rated: Suitable for high temperature applications 70°C max case temp 5 yr warranty or 90°C max case temp 3 yr warranty.

See page E-1 for warranty information.

UltraStart® T8 120–277V Programmed Start

T8 Programmed Start Ballasts For F17 (2 ft), F25 (3 ft), F32 (4 ft) Lamps

62723 - GE232PS347-N

UltraStart® T8 Programmed Start

2 or 1 F32T8 347V Normal Light .88 BF UltraStart®

- A new generation of ultra-efficient Programmed Start ballasts (> 90% efficiency)
- Extends lamp life in frequently switched applications (> 100,000 on/off cycles)
- Starting time visually the same as instant start
- Parallel lamp operation means system maintenance is easier to manage
- Anti-striation circuitry reduces striations with energy saving lamps
- < 10% THD, > 99% power factor

General characteristics

Ballast Type	Electronic – Program / Rapid Start
Starting Method	Programmed start
Lamp Wiring	Parallel
Line Voltage Regulation (+/-)	10%
Ambient Temperature (MAX)	
Case Temperature (MAX)	70°C (158°F)
Ballast Factor	Normal
Power Factor Correction	Active
Sound Rating	A (20-24 decibels)
Additional Info	Anti-striation control, Thermally protected, Universal voltage, TCLP compliant, Auto-restart

Electrical characteristics

Supply Current Frequency	60 Hz
Supply Current Frequency (MIN)	50 Hz/60 Hz

Order information

10 Pack	Pallet Pack	DIY Pack	IP Pack
62723			

Dimensions

Wiring diagram – LFL PS2 – see example on page 11-21	
Case dimensions – Ref Drawing -A – see page 11-22	
Length (L)	9.5 in (241 mm)
Width (W)	1.7 in (43 mm)
Height (H)	1.2 in (30 mm)
Mounting dimensions	
Mount Length (M)	8.9 in (226 mm)
Mount Width (X or F)	1.1 in (29 mm)
Mount Slots (MS)	0.3 in (8 mm)
Weight	1.65 lbs
Exit Type	Side
Remote Mounting Distance to Lamp (F32T8)	18 ft
Remote Mounting Wire Gauge	18 AWG
Lead lengths	**Length (± 1 in)**
Black	25 in (635 mm)
White	25 in (635 mm)
Blue	33 in (838 mm)
Red	33 in (838 mm)
Yellow	47 in (1194 mm)

Specifications by lamp and wattage

Lamp	# of Lamps	Line Volts	System Watts	Nom. Line Current	System Ballast Factor	Ballast Efficacy Factor	Power Factor% (>=)	Crest Factor (<=)	THD% (<=)	Min. Starting Temp (°F/°C)
F40T8	1	347	45	0.13 A	0.99		95	1.7	10	0/-18
	2	347	54	0.16 A	0.88		95	1.7	10	60/16
F32T8/WM	1	347	34	0.10 A	1.01		95	1.7	10	0/-18
	2	347	46	0.14 A	0.88		95	1.7	10	60/16
F32T8/25W	1	347	29	0.09 A	0.96		95	1.7	12	60/16
	2	347	57	0.17 A	0.88		95	1.7	10	0/-18
F32T8	1	347	35	0.11 A	1.03		95	1.7	10	60/16
	2	347	50	0.15 A	0.88		95	1.7	10	60/16
F28T8	1	347	32	0.10 A	0.99		95	1.7	10	60/16
	2	347	39	0.12 A	0.88		95	1.7	10	0/-18
F25T8/WM	1	347	25	0.08 A	0.99		90	1.7	12	0/-18
	2	347	45	0.14 A	0.90		95	1.7	10	0/-18
F25T8	1	347	30	0.09 A	1.03		95	1.7	12	60/16
	2	347	29	0.09 A	0.88		95	1.7	12	0/-18
F17T8/WM	1	347								
	2	347	32	0.10 A	0.89		95	1.7	10	0/-18
F17T8	1	347	22	0.07 A	1.03		95	1.7	15	0/-18

Safety and performance

Product is compliant with material restriction requirements of RoHS ANSI – C62.41 UL Type 1 Outdoor UL Type HL FCC – CLASS A Non-Consumer UL Class P cUL Listed UL Listed NRCan

High Temperature Rated: Suitable for high temperature applications 70°C max case temp 5 yr warranty or 90°C max case temp 3 yr warranty.

See page E-1 for warranty information.

UltraStart® T8 120–277V Programmed Start

T8 Programmed Start Ballasts For F17 (2 ft), F25 (3 ft), F32 (4 ft) Lamps

62724 - GE332PS347-N

UltraStart® T8 Programmed Start

3 F32T8 347V Normal Light .88 BF UltraStart®

- A new generation of ultra-efficient Programmed Start ballasts (> 90% efficiency)
- Extends lamp life in frequently switched applications (> 100,000 on/off cycles)
- Starting time visually the same as instant start
- Parallel lamp operation means system maintenance is easier to manage
- Anti-striation circuitry reduces striations with energy saving lamps
- < 10% THD, > 99% power factor

General characteristics

Ballast Type	Electronic – Program / Rapid Start
Starting Method	Programmed start
Lamp Wiring	Parallel
Line Voltage Regulation (+/-)	10%
Ambient Temperature (MAX)	
Case Temperature (MAX)	70°C (158°F)
Ballast Factor	Normal
Power Factor Correction	Active
Sound Rating	A (20-24 decibels)
Additional Info	Anti-striation control, Thermally protected, Universal voltage, TCLP compliant, Auto-restart

Electrical characteristics

Supply Current Frequency	60 Hz
Supply Current Frequency (MIN)	50 Hz/60 Hz

Order information

10 Pack	Pallet Pack	DIY Pack	IP Pack
62724			

Dimensions

Wiring diagram – LFL PS3 – see example on page 11-21	
Case dimensions – Ref Drawing -A – see page 11-22	
Length (L)	9.5 in (241 mm)
Width (W)	1.7 in (43 mm)
Height (H)	1.2 in (30 mm)
Mounting dimensions	
Mount Length (M)	8.9 in (226 mm)
Mount Width (X or F)	1.1 in (29 mm)
Mount Slots (MS)	0.3 in (8 mm)
Weight	1.65 lbs
Exit Type	Side
Remote Mounting Distance to Lamp (F32T8)	18 ft
Remote Mounting Wire Gauge	18 AWG
Lead lengths	**Length (± 1 in)**
Black	25 in (635 mm)
White	25 in (635 mm)
Blue	33 in (838 mm)
Red	33 in (838 mm)
Red/White	33 in (838 mm)
Yellow	47 in (1194 mm)

Specifications by lamp and wattage

Lamp	# of Lamps	Line Volts	System Watts	Nom. Line Current	System Ballast Factor	Ballast Efficacy Factor	Power Factor% (>=)	Crest Factor (<=)	THD% (<=)	Min. Starting Temp (°F/°C)
F40T8	2	347	78	0.23 A	0.94		95	1.7	10	60/16
	3	347	77	0.23 A	0.88		95	1.7	10	60/16
F32T8/WM	2	347	59	0.18 A	0.98		95	1.7	10	60/16
	3	347	65	0.19 A	0.88		95	1.7	10	60/16
F32T8/25W	2	347	49	0.15 A	0.91		95	1.7	10	60/16
	3	347	83	0.25 A	0.88		95	1.7	10	0/-18
F32T8	2	347	63	0.19 A	1.00		95	1.7	10	0/-18
	3	347	70	0.21 A	0.88		95	1.7	10	60/16
F28T8	2	347	54	0.16 A	0.95		95	1.7	10	60/16
	3	347	65	0.19 A	0.89		95	1.7	10	0/-18
F25T8	2	347	51	0.15 A	0.99		95	1.7	10	0/-18
	3	347	46	0.14 A	0.88		95	1.7	10	0/-18
F17T8	2	347	36	0.11 A	0.98		95	1.7	10	0/-18

Safety and performance

Product is compliant with material restriction requirements of RoHS ANSI – C62.41 UL Type 1 Outdoor UL Type HL FCC – CLASS A Non-Consumer UL Class P cUL Listed UL Listed NRCan

High Temperature Rated: Suitable for high temperature applications 70°C max case temp 5 yr warranty or 90°C max case temp 3 yr warranty.

See page E-1 for warranty information.

UltraStart® T8 120–277V Programmed Start

T8 Programmed Start Ballasts For F17 (2 ft), F25 (3 ft), F32 (4 ft) Lamps

62725 - GE432PS347-N

UltraStart® T8 Programmed Start

4 F32T8 347V Normal Light .88 BF UltraStart®

- A new generation of ultra-efficient Programmed Start ballasts (> 90% efficiency)
- Extends lamp life in frequently switched applications (> 100,000 on/off cycles)
- Starting time visually the same as instant start
- Parallel lamp operation means system maintenance is easier to manage
- Anti-striation circuitry reduces striations with energy saving lamps
- < 10% THD, > 99% power factor

General characteristics

Ballast Type	Electronic – Program / Rapid Start
Starting Method	Programmed start
Lamp Wiring	Parallel
Line Voltage Regulation (+/-)	10%
Ambient Temperature (MAX)	
Case Temperature (MAX)	70°C (158°F)
Ballast Factor	Normal
Power Factor Correction	Active
Sound Rating	A (20-24 decibels)
Additional Info	Anti-striation control, Thermally protected, Universal voltage, TCLP compliant, Auto-restart

Electrical characteristics

Supply Current Frequency	60 Hz
Supply Current Frequency (MIN)	50 Hz/60 Hz

Order information

10 Pack	Pallet Pack	DIY Pack	IP Pack
62725			

Dimensions

Wiring diagram – LFL PS4 – see example on page 11-21	
Case dimensions – Ref Drawing -A – see page 11-22	
Length (L)	9.5 in (241 mm)
Width (W)	1.7 in (43 mm)
Height (H)	1.2 in (30 mm)
Mounting dimensions	
Mount Length (M)	8.9 in (226 mm)
Mount Width (X or F)	1.1 in (29 mm)
Mount Slots (MS)	0.3 in (8 mm)
Weight	1.65 lbs
Exit Type	Side
Remote Mounting Distance to Lamp (F32T8)	18 ft
Remote Mounting Wire Gauge	18 AWG
Lead lengths	**Length (± 1 in)**
Black	25 in (635 mm)
White	25 in (635 mm)
Blue	33 in (838 mm)
Blue/White	33 in (838 mm)
Red	33 in (838 mm)
Red/White	33 in (838 mm)
Yellow	47 in (1194 mm)

Specifications by lamp and wattage

Lamp	# of Lamps	Line Volts	System Watts	Nom. Line Current	System Ballast Factor	Ballast Efficacy Factor	Power Factor% (>=)	Crest Factor (<=)	THD% (<=)	Min. Starting Temp (°F/°C)
F40T8	3	347		0.31 A	0.91		95	1.7	10	60/16
	4	347		0.31 A	0.88		95	1.7	10	60/16
F32T8/WM	3	347		0.25 A	0.94		95	1.7	10	60/16
	4	347		0.24 A	0.88		95	1.7	10	60/16
F32T8/25W	3	347		0.20 A	0.89		95	1.7	10	60/16
	4	347		0.33 A	0.88		95	1.7	10	0/-18
F32T8	3	347		0.26 A	1.00		95	1.7	10	0/-18
	4	347		0.27 A	0.88		95	1.7	10	60/16
F28T8	3	347		0.22 A	0.91		95	1.7	10	60/16
	4	347		0.25 A	0.88		95	1.7	10	0/-18
F25T8	3	347		0.21 A	0.95		95	1.7	10	0/-18
	4	347		0.18 A	0.88		95	1.7	10	0/-18
F17T8	3	347		0.15 A	0.95		95	1.7	12	0/-18

Safety and performance

Product is compliant with material restriction requirements of RoHS ANSI – C62.41 UL Type 1 Outdoor UL Type HL FCC – CLASS A Non-Consumer UL Class P cUL Listed UL Listed NRCan

High Temperature Rated: Suitable for high temperature applications 70°C max case temp 5 yr warranty or 90°C max case temp 3 yr warranty.

See page E-1 for warranty information.

UltraStart® T8 120–277V Programmed Start

T8 Programmed Start Ballasts For F17 (2 ft), F25 (3 ft), F32 (4 ft) Lamps

62726 - GE232PS347-H

UltraStart® T8 Programmed Start

2 or 1 F32T8 347V High Light 1.18 BF UltraStart®

- A new generation of ultra-efficient Programmed Start ballasts (> 90% efficiency)
- Extends lamp life in frequently switched applications (> 100,000 on/off cycles)
- Starting time visually the same as instant start
- Parallel lamp operation means system maintenance is easier to manage
- Anti-striation circuitry reduces striations with energy saving lamps
- < 10% THD, > 99% power factor

General characteristics

Ballast Type	Electronic – Program / Rapid Start
Starting Method	Programmed start
Lamp Wiring	Parallel
Line Voltage Regulation (+/-)	10%
Ambient Temperature (MAX)	
Case Temperature (MAX)	70°C (158°F)
Ballast Factor	High (1.18)
Power Factor Correction	Active
Sound Rating	A (20-24 decibels)
Additional Info	Anti-striation control, Thermally protected, Universal voltage, TCLP compliant, Auto-restart

Electrical characteristics

Supply Current Frequency	60 Hz
Supply Current Frequency (MIN)	50 Hz

Order information

10 Pack	Pallet Pack	DIY Pack	IP Pack
62726			

Dimensions

Wiring diagram – LFL PS2 – see example on page 11-21	
Case dimensions – Ref Drawing -A – see page 11-22	
Length (L)	9.5 in (241 mm)
Width (W)	1.7 in (43 mm)
Height (H)	1.2 in (30 mm)
Mounting dimensions	
Mount Length (M)	8.9 in (226 mm)
Mount Width (X or F)	1.1 in (29 mm)
Mount Slots (MS)	0.3 in (8 mm)
Weight	2.4 lbs
Exit Type	Side
Remote Mounting Distance to Lamp (F32T8)	18 ft
Remote Mounting Wire Gauge	18 AWG
Lead lengths	**Length (± 1 in)**
Black	25 in (635 mm)
White	25 in (635 mm)
Blue	33 in (838 mm)
Red	33 in (838 mm)
Yellow	47 in (1194 mm)

Specifications by lamp and wattage

Lamp	# of Lamps	Line Volts	System Watts	Nom. Line Current	System Ballast Factor	Ballast Efficacy Factor	Power Factor% (>=)	Crest Factor (<=)	THD% (<=)	Min. Starting Temp (°F/°C)
F40T8	1	347	57	0.17 A	1.28		95	1.7	10	60/16
	2	347	61	0.18 A	0.85		95	1.7	10	60/16
F36T8	1	347	39	0.12 A	0.98		95	1.7	10	60/16
	2	347	69	0.21 A	1.16		95	1.7	10	60/16
F32T8/WM	1	347	43	0.13 A	1.32		95	1.7	10	60/16
	2	347	58	0.17 A	1.09		95	1.7	10	60/16
F32T8/25W	1	347	37	0.11 A	1.27		95	1.7	10	60/16
	2	347	74	0.22 A	1.18		95	1.7	10	0/-18
F32T8	1	347	45	0.14 A	1.33		95	1.7	10	0/-18
	2	347	62	0.19 A	1.13		95	1.7	10	60/16
F28T8	1	347	40	0.12 A	1.30		95	1.7	10	60/16
	2	347	59	0.17 A	1.17		95	1.7	10	0/-18
F25T8	1	347	38	0.11 A	1.32		95	1.7	10	0/-18
	2	347	62	0.13 A	1.16		95	1.7	10	0/-18
F17T8	1	347	28	0.08 A	1.31		95	1.7	12	0/-18

Safety and performance

Product is compliant with material restriction requirements of RoHS ANSI – C62.41 UL Type 1 Outdoor UL Type HL FCC – CLASS A Non-Consumer UL Class P

cUL Listed UL Listed NRCan

High Temperature Rated: Suitable for high temperature applications 70°C max case temp 5 yr warranty or 90°C max case temp 3 yr warranty.

See page E-1 for warranty information.

UltraStart® T8 120–277V Programmed Start

T8 Programmed Start Ballasts For F17 (2 ft), F25 (3 ft), F32 (4 ft) Lamps

62727 - GE332PS347-H

UltraStart® T8 Programmed Start

3 F32T8 347V High Light 1.18 BF UltraStart®

- A new generation of ultra-efficient Programmed Start ballasts (> 90% efficiency)
- Extends lamp life in frequently switched applications (> 100,000 on/off cycles)
- Starting time visually the same as instant start
- Parallel lamp operation means system maintenance is easier to manage
- Anti-striation circuitry reduces striations with energy saving lamps
- < 10% THD, > 99% power factor

General characteristics

Ballast Type	Electronic – Program / Rapid Start
Starting Method	Programmed start
Lamp Wiring	Parallel
Line Voltage Regulation (+/-)	10%
Ambient Temperature (MAX)	
Case Temperature (MAX)	70°C (158°F)
Ballast Factor	High (1.18)
Power Factor Correction	Active
Sound Rating	A (20-24 decibels)
Additional Info	Anti-striation control, Thermally protected, Universal voltage, TCLP compliant, Auto-restart

Electrical characteristics

Supply Current Frequency	60 Hz
Supply Current Frequency (MIN)	50 Hz

Order information

10 Pack	Pallet Pack	DIY Pack	IP Pack
62727			

Dimensions

Wiring diagram – LFL PS3 – see example on page 11-21	
Case dimensions – Ref Drawing -A – see page 11-22	
Length (L)	9.5 in (241 mm)
Width (W)	1.7 in (43 mm)
Height (H)	1.2 in (30 mm)
Mounting dimensions	
Mount Length (M)	8.9 in (226 mm)
Mount Width (X or F)	1.1 in (29 mm)
Mount Slots (MS)	0.3 in (8 mm)
Weight	2.4 lbs
Exit Type	Side
Remote Mounting Distance to Lamp (F32T8)	18 ft
Remote Mounting Wire Gauge	18 AWG
Lead lengths	**Length (± 1 in)**
Black	25 in (635 mm)
White	25 in (635 mm)
Blue	33 in (838 mm)
Red	33 in (838 mm)
Red/White	33 in (838 mm)
Yellow	47 in (1194 mm)

Specifications by lamp and wattage

Lamp	# of Lamps	Line Volts	System Watts	Nom. Line Current	System Ballast Factor	Ballast Efficacy Factor	Power Factor% (>=)	Crest Factor (<=)	THD% (<=)	Min. Starting Temp (°F/°C)
F40T8	2	347	102	0.30 A	1.23		95	1.7	10	60/16
	2	347	68	0.20 A	0.94		95	1.7	10	60/16
F36T8	3	347	89	0.26 A	0.85		95	1.7	10	60/16
	2	347	77	0.23 A	1.27		95	1.7	10	60/16
F32T8/WM	3	347	102	0.30 A	1.16		95	1.7	10	60/16
	2	347	63	0.19 A	1.21		95	1.7	10	60/16
F32T8/25W	3	347	83	0.25 A	1.10		95	1.7	10	60/16
	2	347	83	0.25 A	1.28		95	1.7	10	0/-18
F32T8	3	347	110	0.33 A	1.18		95	1.7	10	0/-18
	2	347	71	0.21 A	1.25		95	1.7	10	60/16
F28T8	3	347	94	0.28 A	1.13		95	1.7	10	60/16
	2	347	66	0.19 A	1.27		95	1.7	10	0/-18
F25T8	3	347	86	0.25 A	1.17		95	1.7	10	0/-18
	2	347	46	0.14 A	1.26		95	1.7	10	0/-18
F17T8	3	347	61	0.18 A	1.16		95	1.7	10	0/-18

Safety and performance

Product is compliant with material restriction requirements of RoHS ANSI – C62.41 UL Type 1 Outdoor UL Type HL FCC – CLASS A Non-Consumer UL Class P cUL Listed UL Listed NRCan

High Temperature Rated: Suitable for high temperature applications 70°C max case temp 5 yr warranty or 90°C max case temp 3 yr warranty.

See page E-1 for warranty information.

UltraStart® T8 120–277V Programmed Start

T8 Programmed Start Ballasts For F17 (2 ft), F25 (3 ft), F32 (4 ft) Lamps

63041 - GE332PS347-L

UltraStart® T8 Programmed Start

2 or 1 F32T8 347V High Light 1.18 BF UltraStart®

- A new generation of ultra-efficient Programmed Start ballasts (> 90% efficiency)
- Extends lamp life in frequently switched applications (> 100,000 on/off cycles)
- Starting time visually the same as instant start
- Parallel lamp operation means system maintenance is easier to manage
- Anti-striation circuitry reduces striations with energy saving lamps
- < 10% THD, > 99% power factor

General characteristics

Ballast Type	Electronic – Program / Rapid Start
Starting Method	Programmed start
Lamp Wiring	Parallel
Line Voltage Regulation (+/-)	10%
Ambient Temperature (MAX)	
Case Temperature (MAX)	70°C (158°F)
Ballast Factor	Low-PS (.71)
Power Factor Correction	Active
Sound Rating	A (20-24 decibels)
Additional Info	Anti-striation control, Thermally protected, Universal voltage, TCLP compliant, Auto-restart

Electrical characteristics

Supply Current Frequency	60 Hz
Supply Current Frequency (MIN)	50 Hz/60 Hz

Order information

10 Pack	Pallet Pack	DIY Pack	IP Pack
63041			

Dimensions

Wiring diagram – LFL PS3 – see example on page 11-21	
Case dimensions – Ref Drawing -A – see page 11-22	
Length (L)	9.5 in (241 mm)
Width (W)	1.7 in (43 mm)
Height (H)	1.2 in (30 mm)
Mounting dimensions	
Mount Length (M)	8.9 in (226 mm)
Mount Width (X or F)	1.1 in (29 mm)
Mount Slots (MS)	0.3 in (8 mm)
Weight	1.65 lbs
Exit Type	Side
Remote Mounting Distance to Lamp (F32T8)	18 ft
Remote Mounting Wire Gauge	18 AWG
Lead lengths	**Length (± 1 in)**
Black	25 in (635 mm)
White	25 in (635 mm)
Blue	33 in (838 mm)
Red	33 in (838 mm)
Red/White	33 in (838 mm)
Yellow	47 in (1194 mm)

Specifications by lamp and wattage

Lamp	# of Lamps	Line Volts	System Watts	Nom. Line Current	System Ballast Factor	Ballast Efficacy Factor	Power Factor% (>=)	Crest Factor (<=)	THD% (<=)	Min. Starting Temp (°F/°C)
F40T8	2	347	66	0.19 A	0.77		95	1.7	10	60/16
	2	347	50	0.15 A	0.79		95	1.7	10	60/16
F32T8/WM	3	347	66	0.20 A	0.71		95	1.7	10	60/16
	2	347	43	0.13 A	0.75		95	1.7	10	60/16
F32T8/25W	3	347	56	0.17 A	0.71		95	1.7	10	60/16
	2	347	52	0.16 A	0.81		95	1.7	10	0/-18
F32T8	3	347	70	0.21 A	0.71		95	1.7	10	0/-18
	2	347	46	0.14 A	0.77		95	1.7	10	60/16
F28T8	3	347	60	0.18 A	0.71		95	1.7	10	60/16
	2	347	43	0.13 A	0.81		95	1.7	10	0/-18
F25T8	3	347	55	0.16 A	0.73		95	1.7	10	0/-18
	2	347	31	0.10 A	0.81		95	1.7	12	0/-18
F17T8	3	347	40	0.12 A	0.73		95	1.7	10	0/-18

Safety and performance

Product is compliant with material restriction requirements of RoHS ANSI – C62.41 UL Type 1 Outdoor UL Type HL FCC – CLASS A Non-Consumer UL Class P

cUL Listed UL Listed NRCan

High Temperature Rated: Suitable for high temperature applications 70°C max case temp 5 yr warranty or 90°C max case temp 3 yr warranty.

See page E-1 for warranty information.

Wiring Diagrams
T8 Programmed Start Ballasts

LFL PS1

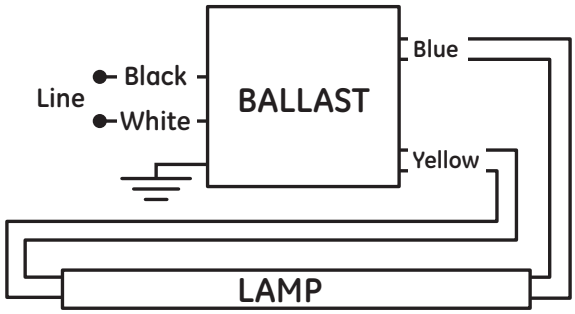

LFL PS2

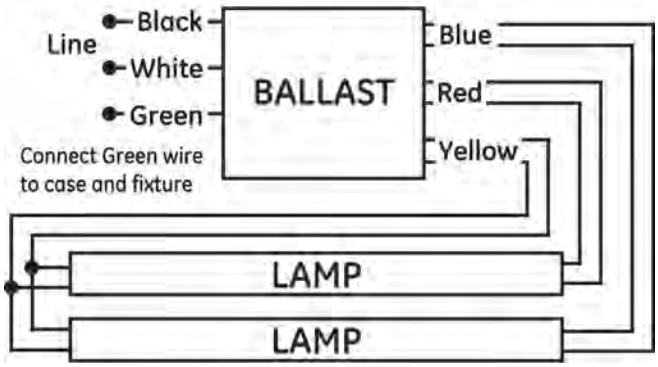

LFL PS3

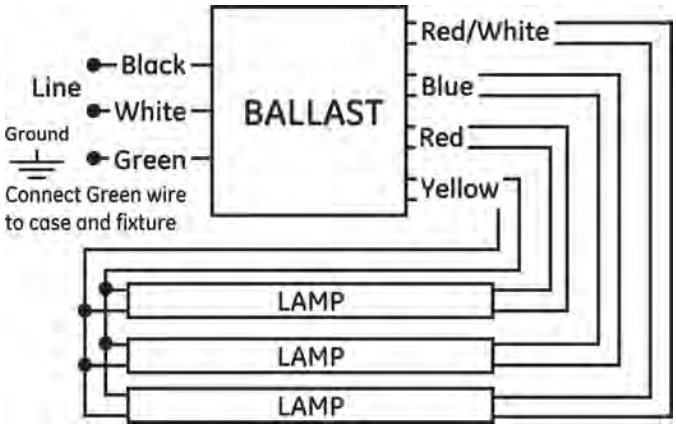

LFL PS4

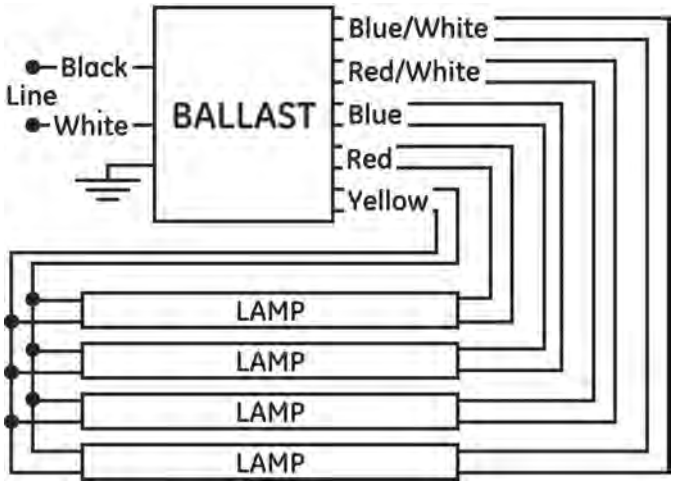

See page E-1 for warranty information.

Case Dimensions
T8 Programmed Start Ballasts

-A

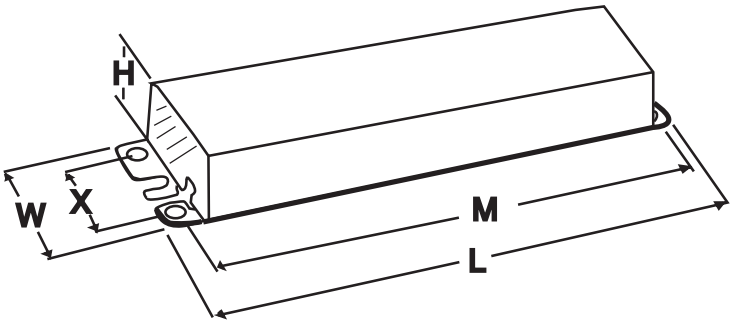

LG

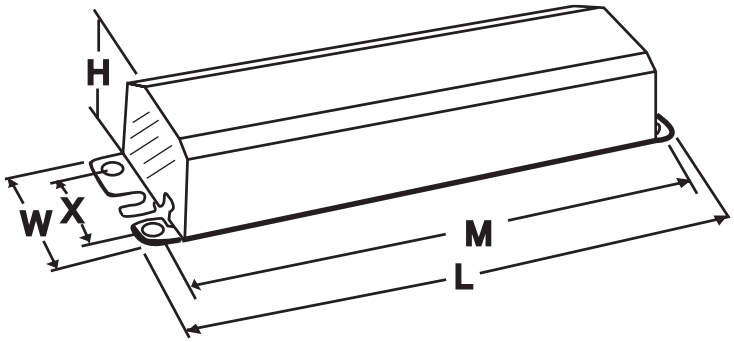

See page E-1 for warranty information.

Table of Contents
T8/T5 Dimming Ballasts

Dimming Applications

UltraStart T8 Program Start Bi-level Switching Ballast 100% to 30% Light Output

As ballast efficiency increases, controls and dimming ballasts will deliver the next level of energy savings. Proper installation and set up is needed to ensure the system will deliver the energy savings while maximizing lamp life. GE dimming ballasts are available for load shed as well as deep dimming operation. Dimming applications generally use full wattage lamps, but GE UltraMax® 28W lamps are also suitable for use on GE dimming ballasts. The ballast must be mounted in the same fixture as the lamps, no tandem or remote operation is permitted for programmed start dimming ballasts.

In order to achieve maximum lamp performance, the lamps should be seasoned at full power for 12 hours per NEMA guidelines prior to dimming operation. Ballasts for programmed start dimming must use rapid start type lampholders that accommodate two separate wires that connect one to each lamp pin. Shunted or shorted lampholders cannot be used with programmed start dimming systems. Load shed ballasts are instant start and can be used with shunted lampholders. The load shed ballast can be used in some tandem fixture applications with total lead length determined by the specific application.

GE programmed start dimming ballasts are compatible with 0-10V Class 1 or Class 2 wiring systems rated as ANSI Type 1. GE load shed ballasts feature step or variable 0-10V control. The step options include Class 1 compatible control and dual input leads for double switched applications such as classrooms.

Key Fluorescent Dimming Strategies

- Daylight harvesting.
  Ideal for spaces occupied by users performing important stationary tasks, dimming enables the lighting system to reduce light output in response to daylight availability, saving energy.
- Adaptive compensation.
  This strategy involves reducing light levels at night in spaces with non-critical tasks based on research that people prefer and need less light at night than during daytime.
- Demand response.
  In this strategy, the control system responds to a signal from the local utility to reduce light levels during a grid emergency. The owner receives financial incentives such as special rates in return.

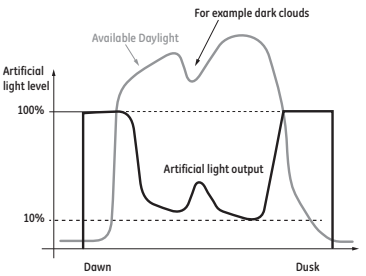

See page E-1 for warranty information.

UltraStart® T8 100-3% Dimming Ballast in Normal and High Ballast Factor

GE UltraStart® 0-10V T8 electronic dimming fluorescent ballast offers the most efficient dimming system on the market today. They are available in 1-4 lamp normal ballast factor or 0.88 light output and 2-4 lamp high ballast factor or 1.18 light output for applications where more light is needed. UltraStart® dimming ballasts are multi-volt and operate in 120-277 voltage range.

Today's fixed light fluorescent systems are now 93% efficient and the next stage in additional energy savings is to either shut lights off with occupancy sensors or efficiently dim the lights with GE UltraStart® 0-10V dimming ballast. This ballast can be effectively incorporated in popular lighting energy reduction strategies such as daylight harvesting, load shedding and energy management systems to allow for a more affordable and flexible controllable lighting system.

UltraStart® T8 Program Start Bi-level Switching Ballast 100% to 30% Light Output

The new UltraStart® T8 hi-efficiency dimming ballast family dims from 100% to 30% light output. The ballast in the family operates at normal .88 ballast factor and low .78 ballast factors when used at 100% light output. We offer a 1- and 2-lamp ballast at normal light output, and 2-lamp ballast at low light output. The ballasts are designed to meet California Energy Efficiency Standards (Title 24) and ASRAE 2010 requirements for multi-level lighting. UltraStart® T8 Bi-level switching ballast reduce energy by over 50% when light is not needed and provides architectural dimming at 30% light output. The 1-lamp ballast is ideal for hallway and stairwell fixture applications and the 2-lamp L and N ballast are excellent applications for Office, School and Hospital patient rooms.

The Bi-level UltraStart® ballast is easy and inexpensive to install:

- The ballast can be switched manually by using 2 switch legs: the first switches on and the second switches off @ 30% light and both switches on for 100% light.
- Operates with a line voltage motion sensor when the space is not occupied
- Two black leads control the light level. Connection of both black leads to hot will result in 100% light. Connect 1 black lead to hot and dim to 30% light level.
- Can be switched between 100% and 30% continuously without reducing rated lamp life

UltraStart® T5 Program Start Step Dimming Ballast 100% to 35% Light Output:

Now available for F28T5 and F24T5HO lamps; Provides a simple solution to meet new California Title 24 reduced power requirements for locations that include corridors, stairwells, warehouses, classrooms, libraries, and parking garages.

0-10V Dimming Load Shed Instant Start Ballast

The 0-10V Dimming Load Shed Instant Start ballast is the second dimming ballast option from GE and can dim at any level between a high 1.18 ballast factor or 100% light to a low .71 ballast factor @ 60%. It is also available in 2, 3, 4 and 6 lamp options.

Low voltage wiring is required to connect the ballast to the controller. A common low voltage wiring type is stranded- copper twisted pair 18AWG. Low voltage wiring is considered Class 2 and not recommended for placement in the same conduit as Class 1 wiring, which is the power, ground and neutral lines. Most codes allow Class 2 wiring to be run without conduit and junction boxes.

The user can save even more energy with this ballast because it is also compatible and warranted with F32/25, F28 and F32/WM energy efficient 4 ft T8 lamps. The ballast includes GE Patented anti-striation control capacitor that will prevent striations that are common for these lamps.

0-10V Dimming Load Shed Features:

- Operates using 0-10 VDC analog control dimmer and wiring – the most popular and cost efficient protocol
- Uses 4 wires: (hot and neutral) and two control wires (purple and gray) to control the voltage signal to the ballast. When the voltage is 10 VDC, then the lamps will be at full light output. As the voltage decreases, the ballast decreases light output. When the control voltage is 0 VDC, then the ballast will generate 60% light output.
- Compatible with 0-10V controllers that meet ANSI specifications

In addition to the outstanding operating efficiencies, these ballast are designed to operate in hot conditions. They are UL rated for operation in ambient temperatures of 55ºC or 131ºF, and feature UL Type CC Anti-Arc guard protection to prevent arcing if there is a bad or broken socket.

Both ballast are compliant with UL1598, which requires new and retrofitted fixtures to have ballasts with UL Type CC Anti Arc guard or special circle I sockets. Like all GE Electronic ballast, product is compliant with material restriction requirements of RoHS. The ballast operates utilizing 0-10 VDC analog control dimmer and wiring. This is the most popular and cost efficient protocol. The ballast uses 4 wires: (hot and neutral) and two control wires (purple and gray) to control the voltage signal to the ballast. When the voltage is 10 VDC then the lamp/ballast will be at full light output. As the voltage decreases the ballast decreases light out put. Low voltage wiring is required to connect the ballast to the controller. A common low voltage wiring type is stranded- copper twisted pair 18AWG. Low voltage wiring is considered Class 2 and not recommended for placement in the same conduit as Class 1 wiring, which is the power, ground and neutral lines. Most codes allow Class 2 wiring to be run without conduit and junction boxes. GE UltraStart® T8 dimming ballast is compatible with 0-10V controllers that meet ANSI specifications

GE UltraStart® 0-10V dimming ballast use less watts than other dimming ballast on the market today. Other dimming ballast manufacturers use more energy by continuously heating the lamps cathodes to maintain light. This is old technology. GE designed UltraStart® dimming ballast turn off the heat to the lamp cathodes after starting the lamp and keeps the heat off until dimmed to a 0.71 ballast factor. This saves watts through this range.

The Continuous Cathode cut-out technology allows for the essentially the same efficiency at 100% light output as our UltraMax® instant start and UltraStart® program start ballast. The ballast

See page E-1 for warranty information.

is also in compliance with a new proposed standard from NEMA (National electrical manufacturers association) called NEMA-LL-9. This standard calls for cathode heating specifications on dimming levels from 35% light output to 1%. By maintaining these heating standards at lower dimming levels, we can assure the user of optimal lamp performance with minimal end blackening and full program start rated lamp warranties.

The new dimming ballast save money on maintenance cost because they operate in parallel. When a lamp fails in a multiple lamp fixture powered by GE's dimming ballast, the remaining lamps stay lit. The maintenance staff only needs to replace the failed lamp. In all other manufacturer's dimming ballast, if one lamp fails then the entire fixture will fail. The maintenance staff will typically replace all the lamps because they cannot identify the failed lamp.

Instant Start Bi-Level Switching Ballast

The new Instant Start Bi-Level Switching ballast operates at a high 1.18 ballast factor at 100% light output and can switch lamps to a low .71 ballast factor or 60% light output. The ballast is available in 2, 3, 4 and a 6-lamp configuration and is designed to reduce light levels within the fixture when maximum light levels are not needed.

The T8 UltraMax® 6-lamp Bi-level ballast has achieved 95% efficiency, setting new standards for ballast efficiency. The 4 and 6 lamp Bi-level ballast are perfect options for popular hi-bay fixtures and applications. Fixtures can dim when the space is not in use and lighted areas are maintained for safety and convenience. The 2 and 3 lamp Bi-level ballast are perfect for reducing lamps in a retrofitted fixture with the option of dimming the fixture when the light is not needed.

The user can save even more energy because the new ballast is compatible and warranted with F32/25, F28 and F32/WM energy efficient 4 ft T8 lamps. The ballast includes GE Patented anti-striation control capacitor that will prevent striations that are common for these lamps. The Bi-level switching ballast is the most efficient and easy to commission dimming option on the market today.

Bi-Level Switching Features:

- Can be operated manually with 2 switch legs: 1 switch on / 2 switch off @ 60% light and both switches on @ 100% light.
- Operates with a motion sensor and switch to the 60% light level when the space is not occupied
- Two black hot leads to control the light level. Connection of either black lead to hot will give 60% light level. Connection of both black leads to hot will result in 100% light level.
- Can be switched between 100% and 60% continuously without reducing rated lamp life.

UltraMax® Bi-Level (S60) Dimming and Load Shed (V60) Dimming

These extremely high efficiency multi-volt (120-277V) electronic ballasts offer the benefits of a low cost instant start design but the flexibility to dim from 100% to 60% or load shed dim with a 0-10V controller anywhere between 100% and 60%. With F32T8 lamps there is a direct 40% energy reduction when dimming from 100% to 60% light level reduction. Lamp life is not impacted by dimming from high to low. For applications with more than 5 starts per day, a programmed start (PS) or PS dimming ballast is recommended.

GE Dimming Ballasts and NEMA LL-9

NEMA LL-9 is the first coordinated guidance on achieving industry lamp and ballast compatibility with T8 dimming systems and our UltraStart® T8 0-10V full range dimming ballasts are fully compliant. Parallel lamp operation ensures that each lamp is treated properly and within LL-9 specifications with consistent lamp-to-lamp results. Series wired dimming ballasts result in uneven cathode heating and inconsistent lamp to lamp performance and life. Using NEMA LL-9 compliant ballasts means adhering to an open standard that enables you to use different lamp and ballast manufacturers and still know that you will have a reliable system. The entire GE Dimming Ballast offering is NEMA LL-9 compliant. Demand it in your facility.

It is worth noting that when installing new fixtures with dimming capability or relamping with new lamps that GE recommends seasoning the lamps overnight at high ballast factor, or full light output, per NEMA guidelines.

Instant Start vs. Rapid Start Sockets

When using programmed start or dimming ballasts in fixtures, sockets must be 2-pin rapid start type. Fixtures with T8 instant start ballasts must use jumpered rapid start sockets or shunted lamp holders (internal to the lamp holder) that bridge the lamp bi-pins together into one contact on each side of the lamp. If retrofitting from a instant start ballast fixture with shunted sockets to a dimming or programmed start ballast, rapid start type sockets must be used to properly start lamps and maintain rated lamp life.

See page E-1 for warranty information.

UltraStart® T8 Step Dimming Program Start Dimming Ballast
T8 Dimming Ballasts

68966-GE132-MVPS-N-S30

Ultrastart® Bi-level Dimming

Program Start Bi-level Dimming

1 F32T8 120-277V "N" .88 BF UltraStart® 100/30% Bi-level Switching

- UL Type CC Rating provides protection against arcing in electrical devices
- Bi-level Switching 100 to 30%
- Program Start Bi-level Dimming
- Anti-striation Control for better light quality, with no striations
- 2 or 1 F32T8 120-277V "N" .88 BF UltraStart® 100/30% Bi-level Switching
- UL 55C (131F) Ambient rating - High Temparature Protection Circuit
- Multi-Volt Technology handles voltage from 120-277
- Parallel Lamp operation

General characteristics

Ballast Type	Electronic-Dimming
Dimming Type	Step Dimming
Starting Method	Program Start
Lamp Wiring	Parallel
Line Voltage Regulation+/-	10%
Ambient Temperature (Max)	55° C (131° F)
Case Temperature(Max)	70° C (158° F)
Ballast Factor	.88 to .25
Power Factor Correction	Active
Sound Rating	A
Enclosure Type	Metal
Additional Info	No PCB'sAnti-striation control, Unviversal voltage inherent thermal protection

Electrical characteristics

Supply Current Frequency (MIN)	50/60 Hz

Order information

10 Pack	Pallet Pack	DIY Pack	IP Pack
68966			

Dimensions

Wiring diagram - LFL - 1N S30 – see example on Page 12-27	
Case dimensions - Ref Drawing -A – see Page 12-29	
Length (L)	9.5 in (241mm)
Width (W)	1.7 in (43mm)
Height (H)	1.2 in (31mm)
Mounting dimensions	
Mount Length	8.9 in (226mm)
Mount Width	1.18 in (30mm
Mount Slots (MS)	.3 in (8mm)
Weight	1.47
Exit Type	Side
Remote Mounting Distance to lamp (F32T8)	8 Ft
Remote Mounting Wire gage	18 AWG
Lead lengths	
Black	25.0 in (635mm)
Blue	33.0 in (864mm)
Red	33.0 in (864mm)
White	25.0 in (635mm)
Yellow	47.0 in (1194mm)

Specifications by lamp and wattage

Lamps		Light Output	Input Watts		UL Nominal line Amps		Power Factor		Ballast	Harmonic Total		Crest	Min Starting
Type	#		120V	277V	120V	277V	120V	277V	Factor	120V	277V	Factor	Temp
F32T8 /U	1	100%	30	29	0.26	0.12	0.99	0.94	0.88	5%	10%	<1.7	0F
	1	30%	12	13	0.11	0.06	0.99	0.93	0.25	10%	20%	<1.7	32F
F32T8/WM	1	100%	28	28	0.25	0.11	0.99	0.93	0.88	5%	10%	<1.7	32F
	1	30%	12	13	0.11	0.06	0.99	0.83	0.18	10%	21%	<1.7	32F
F28T8	1	100%	25	26	0.22	0.10	0.99	0.92	.87	5%	11%	<1.7	32F
	1	30%	12	13	0.11	0.06	0.99	0.83	.22	10%	21%	<1.7	32F
F32T8/25W	1	100%	25	24	0.22	0.10	0.99	0.91	0.84	5%	11%	<1.7	32F
	1	30%	12	13	0.11	0.06	0.99	0.83	0.23	10%	21%	<1.7	32F
F25T8	1	100%	25	24	0.21	0.10	0.99	0.92	0.9	5%	11%	<1.7	0F
	1	30%	9	10	0.08	0.05	0.98	0.77	0.17	10%	25%	<1.7	32F
F17T8	1	100%	18	18	0.16	0.08	0.99	0.87	.95	10%	14%	<1.7	0F
	1	30%	10	10	0.09	0.05	0.98	0.78	.21	10%	25%	<1.7	32F
F15T8	1	100%	15	15	0.13	0.07	0.99	0.84	.92	10%	17%	<1.7	0F
	1	30%	7	8	0.06	0.04	0.97	0.68	.38	12%	32%	<1.7	32F
F36T8	1	100%	25	25	0.22	0.10	0.99	0.92	.88	5%	11%	<1.7	32F
	1	30%	14	13	0.11	0.06	0.99	0.94	.18	10%	20%	<1.7	32F

Safety and performance

UL Type 1 Outdoor UL Type HL ANSI - C82.11 Cons 2002, ANSI - C62.41 - 1991 Product is compliant with material restriction requirements of RoHS

FCC – Part 18 (Class A) for EMI and RFI Non-Consumer Limits cUL Listed UL Type CC High Temperature Rated: Suitable for high temperature applications

70C max case temp 5 yr warranty or 90C max case temp 3 yr warranty NEMA Premium

See page E-1 for warranty information.

UltraStart® T8 Step Dimming Program Start Dimming Ballast
T8 Dimming Ballasts

68968-GE232-MVPS-L-S30

Ultrastart® Bi-level Dimming

Program Start Bi-level Dimming

2 or 1 F32T8 120-277V "L" .78 BF UltraStart® 100/30% Bi-level Switching

- UL Type CC Rating provides protection against arcing in electrical devices
- Bi-level Switching 100 to 30%
- Anti-striation Control for better light quality , with no striations
- UL 55C (131F) Ambient rating - High Temparature Protection Circuit
- Multi-Volt Technology handles voltage from 120-277
- Parallel Lamp operation

General characteristics

Ballast Type	Electronic-Dimming
Dimming Type	Step Dimming
Starting Method	Program Start
Lamp Wiring	Parallel
Line Voltage Regulation+/-	10%
Ambient Temperature (Max)	55° C (131° F)
Case Temperature(Max)	70° C (158° F)
Ballast Factor	.78 to .20
Power Factor Correction	Active
Sound Rating	A
Enclosure Type	Metal
Additional Info	No PCB'sAnti-striation control, Unviversal voltage inherent thermal protection

Electrical characteristics

Supply Current Frequency (MIN)	50/60 Hz

Order information

10 Pack	Pallet Pack	DIY Pack	IP Pack
68968			

Dimensions

Wiring diagram - LFL- 2N/L S30 – see example on Page 12-27	
Case dimensions - Ref Drawing - A – see Page 12-29	
Length (L)	9.5 in (241mm)
Width (W)	1.7 in (43mm)
Height (H)	1.2 in (31mm)
Mounting dimensions	
Mount Length	8.9 in (226mm)
Mount Width	1.18 in (30mm
Mount Slots (MS)	.3 in (8mm)
Weight	1.47
Exit Type	Side
Remote Mounting Distance to lamp (F32T8)	8 Ft
Remote Mounting Wire gage	18 AWG
Lead lengths	
Black	25.0 in (635mm)
Blue	33.0 in (864mm)
Red	33.0 in (864mm)
White	25.0 in (635mm)
Yellow	47.0 in (1194mm)

Specifications by lamp and wattage

Lamps		Light Output	Input Watts		UL Nominal line Amps		Power Factor		Ballast	Harmonic Total		Crest	Min Starting
Type	#		120V	277V	120V	277V	120V	277V	Factor	120V	277V	Factor	Temp
F32T8 /U	2	100%	52	51	0.46	0.20	1.00	0.97	0.78	5%	10%	<1.7	0F
	2	30%	19	20	0.11	0.08	0.99	0.88	0.2	10%	19%	<1.7	32F
	1	100%	36	36	0.32	0.14	1.00	0.94	0.96	5%	10%	<1.7	0F
	1	30%	15	16	0.13	0.07	0.99	0.84	0.29	10%	23%	<1.7	32F
F32T8/WM	2	100%	51	50	0.44	0.19	1.00	0.97	0.78	5%	5%	<1.7	32F
	2	30%	19	20	0.17	0.08	0.99	0.88	0.18	10%	19%	<1.7	32F
	1	100%	34	33	0.29	0.13	1.00	0.94	0.96	10%	11%	<1.7	32F
	1	30%	15	16	0.13	0.07	0.99	0.84	0.29	10%	23%	<1.7	32F
F28T8	2	100%	47	47	0.42	0.18	1.00	0.96	0.8	5%	10%	<1.7	32F
	2	30%	18	19	0.16	0.08	0.99	0.87	.18	10%	20%	<1.7	32F
	1	100%	32	32	0.28	0.13	1.00	0.93	.98	5%	12%	<1.7	32F
	1	30%	14	15	0.13	0.07	0.99	0.83	.27	10%	24%	<1.7	32F
F32T8/25W	2	100%	45	44	0.39	0.17	1.00	0.96	.77	5%	10%	<1.7	32F
	2	30%	19	19	0.16	0.08	0.99	0.88	0.23	10%	20%	<1.7	32F
	1	100%	29	30	0.26	0.12	1.00	0.92	0.94	10%	12%	<1.7	32F
	1	30%	14	15	0.13	0.07	0.99	0.83	0.31	10%	24%	<1.7	32F
F25T8	2	100%	43	42	0.38	0.16	1.00	0.96	0.82	5%	10%	<1.7	0F
	2	30%	18	18	0.15	0.08	0.99	0.87	0.11	10%	11%	<1.7	32F
	1	100%	30	29	0.25	0.12	1.00	0.92	1.01	10%	13%	<1.7	0F
	1	30%	15	16	0.13	0.07	0.99	0.84	0.22	10%	23%	<1.7	32F
F17T8	2	100%	32	32	0.28	0.13	1.00	0.93	.84	10%	12%	<1.7	0F
	2	30%	15	15	0.13	0.07	0.99	0.84	.15	10%	23%	<1.7	32F
	1	100%	22	23	0.20	0.10	0.99	0.89	1.02	10%	16%	<1.7	0F
	1	30%	12	13	0.11	0.06	0.98	0.79	.21	11%	28%	<1.7	32F
F15T8	2	100%	26	27	0.23	0.11	1.00	0.91	.82	10%	14%	<1.7	0F
	2	30%	12	12	0.10	0.06	0.98	0.77	.32	12%	29%	<1.7	32F
	1	100%	19	19	0.16	0.08	0.99	0.85	1.02	10%	19%	<1.7	0F
	1	30%	10	10	0.09	0.05	0.97	0.73	.42	14%	32%	<1.7	32F
F36T8	2	100%	46	45	0.40	0.17	1.00	0.96	.78	5%	10%	<1.7	32F
	2	30%	19	19	0.17	0.08	0.99	0.88	.18	10%	19%	<1.7	32F
	1	100%	31	30	0.27	0.12	1.00	0.93	.96	10%	12%	<1.7	32F
	1	30%	14	15	0.13	0.07	0.99	0.83	.29	10%	24%	<1.7	32F
F40T8	1	100%	40	40	0.35	0.16	1.00	0.95	.93	5%	10%	<1.7	32F
	1	30%	17	19	0.15	0.08	0.99	0.87	.27	10%	20%	<1.7	32F

Safety and performance

UL Type 1 Outdoor UL Type HL ANSI - C82.11 Cons 2002, ANSI - C62.41 - 1991 Product is compliant with material restriction requirements of RoHS

FCC – Part 18 (Class A) for EMI and RFI Non-Consumer Limits cUL Listed UL Type CC High Temperature Rated: Suitable for high temperature applications

70C max case temp 5 yr warranty or 90C max case temp 3 yr warranty NEMA Premium

See page E-1 for warranty information.

UltraStart® T8 Step Dimming Program Start Dimming Ballast
T8 Dimming Ballasts

68967-GE232-MVPS-N-S30

Ultrastart® Bi-level Dimming

Program Start Bi-level Dimming

2 or 1 F32T8 120-277V "N" .88 BF UltraStart® 100/30% Bi-level Switching

- UL Type CC Rating provides protection against arcing in electrical devices
- Bi-level Switching 100 to 30%
- Anti-striation Control for better light quality , with no striations
- UL 55C (131F) Ambient rating - High Temperature Protection Circuit
- Multi-Volt Technology handles voltage from 120-277
- Parallel Lamp operation

General characteristics

Ballast Type	Electronic-Dimming
Dimming Type	Step Dimming
Starting Method	Program Start
Lamp Wiring	Parallel
Line Voltage Regulation+/-	10%
Ambient Temperature (Max)	55° C (131° F)
Case Temperature(Max)	70° C (158° F)
Ballast Factor	.88 to .25
Power Factor Correction	Active
Sound Rating	A
Enclosure Type	Metal
Additional Info	No PCB'sAnti-striation control, Universal voltage inherent thermal protection

Electrical characteristics

Supply Current Frequency (MIN)	50/60 Hz

Order information

10 Pack	Pallet Pack	DIY Pack	IP Pack
68967			

Dimensions

Wiring diagram-LFL- 2N/L S30 – see example on Page 12-27	
Case dimensions-Ref Drawing -A – see Page 12-29	
Length (L)	9.5 in (241mm)
Width (W)	1.7 in (43mm)
Height (H)	1.2 in (31mm)
Mounting dimensions	
Mount Length	8.9 in (226mm)
Mount Width	1.18 in (30mm
Mount Slots (MS)	.3 in (8mm)
Weight	1.47
Exit Type	Side
Remote Mounting Distance to lamp (F32T8)	8 Ft
Remote Mounting Wire gage	18 AWG
Lead lengths	
Black	25.0 in (635mm)
Blue	33.0 in (864mm)
Red	33.0 in (864mm)
White	25.0 in (635mm)
Yellow	47.0 in (1194mm)

Specifications by lamp and wattage

Lamps			Input Watts		UL Nominal Line Amps		Power Factor		Ballast Factor	Harmonic Total		Crest Factor	Min Starting Temp
Type	#	Light Output	120V	277V	120V	277V	120V	277V		120V	277V		
F32T8 /U	2	100%	59	57	0.51	0.22	0.97	0.96	0.88	5%	10%	<1.7	0F
	2	30%	24	25	0.22	0.10	0.99	0.91	0.25	10%	17%	<1.7	32F
	1	100%	39	39	0.34	0.15	0.99	0.94	1.13	5%	12%	<1.7	0F
	1	30%	20	20	0.17	0.08	0.99	0.88	0.39	10%	20%	<1.7	32F
F32T8/WM	2	100%	55	53	0.48	0.21	1.00	0.97	0.88	5%	10%	<1.7	32F
	2	30%	23	24	0.21	0.10	0.99	0.91	0.23	10%	18%	<1.7	32F
	1	100%	36	36	0.32	0.14	1.00	0.94	1.13	5%	13%	<1.7	32F
	1	30%	19	19	0.17	0.08	0.99	0.88	0.39	10%	21%	<1.7	32F
F28T8	2	100%	51	50	0.45	0.19	1.00	0.97	0.87	5%	10%	<1.7	32F
	2	30%	22	23	0.20	0.09	0.99	0.90	.27	10%	18%	<1.7	32F
	1	100%	34	34	0.30	0.13	1.00	0.94	1.11	5%	14%	<1.7	32F
	1	30%	18	18	0.16	0.08	0.99	0.87	.44	10%	22%	<1.7	32F
F32T8/25W	2	100%	49	48	0.42	0.18	1.00	0.96	.84	5%	10%	<1.7	32F
	2	30%	22	23	0.20	0.10	0.99	0.91	0.31	10%	18%	<1.7	32F
	1	100%	32	32	0.29	0.13	1.00	0.93	1.07	10%	14%	<1.7	32F
	1	30%	17	18	0.16	0.08	0.99	0.87	0.43	10%	22%	<1.7	32F
F25T8	2	100%	46	45	0.41	0.18	1.00	0.96	0.94	10%	11%	<1.7	0F
	2	30%	21	21	0.19	0.09	0.99	0.89	0.32	10%	20%	<1.7	32F
	1	100%	31	31	0.28	0.13	1.00	0.93	1.14	10%	15%	<1.7	0F
	1	30%	18	19	0.16	0.08	0.99	0.87	0.37	10%	21%	<1.7	32F
F17T8	2	100%	35	34	0.30	0.14	1.00	0.94	.95	5%	13%	<1.7	0F
	2	30%	17	17	0.15	0.08	0.99	0.86	.15	10%	23%	<1.7	32F
	1	100%	24	24	0.21	0.10	0.99	0.89	1.14	10%	18%	<1.7	0F
	1	30%	15	15	0.13	0.07	0.99	0.83	.36	10%	24%	<1.7	32F
F15T8	2	100%	28	28	0.25	0.12	1.00	0.92	.92	10%	15%	<1.7	0F
	2	30%	13	13	0.11	0.06	0.98	0.79	.32	11%	29%	<1.7	32F
	1	100%	21	21	0.18	0.09	0.99	0.88	1.15	10%	19%	<1.7	0F
	1	30%	11	11	0.09	0.06	0.98	0.75	.45	12%	32%	<1.7	32F
F36T8	2	100%	50	49	0.43	0.19	1.00	0.97	.88	5%	10%	<1.7	32F
	2	30%	24	24	0.21	0.10	0.99	0.91	.23	10%	18%	<1.7	32F
	1	100%	33	33	0.29	0.13	1.00	0.93	1.13	10%	14%	<1.7	32F
	1	30%	18	19	0.16	0.08	0.99	0.88	.39	10%	21%	<1.7	32F
F40T8	1	100%	45	44	0.39	0.17	1.00	0.96	1.04	5%	11%	<1.7	32F
	1	30%	24	24	0.21	0.10	0.99	0.91	.42	10%	18%	<1.7	32F

Safety and performance

UL Type 1 Outdoor UL Type HL ANSI - C82.11 Cons 2002, ANSI - C62.41 - 1991 Product is compliant with material restriction requirements of RoHS

FCC – Part 18 (Class A) for EMI and RFI Non-Consumer Limits cUL Listed UL Type CC High Temperature Rated: Suitable for high temperature applications

70C max case temp 5 yr warranty or 90C max case temp 3 yr warranty NEMA Premium

See page E-1 for warranty information.

UltraMax® Bi-Level Dimming & Load Shed Dimming Instant Start High-Efficiency
T8 Dimming Ballasts

73233 – GE232MAX90-S60

UltraMax® Bi-Level Dimming
Instant Start High-Efficiency

2 or 1 – F32T8 120 to 277 "H" 1.18 BF UltraMax® 100/60% step dim

- Bi-Level Switching 100 to 60%
- Anti-Striation Control for better light quality, with no striations.
- UL 55C Ambient Rating - HighTemperature Protection Circuit
- Multi-Voltage Technology handles voltage from 120 to 277V
- UL Type CC Rating provides protection against arcing in electrical devices.
- Cold temperature -22F Minimum Starting Temperature

General characteristics

Ballast Type	Electronic - Dimming
Dimming Type	Continuous
Starting Method	Instant start
Lamp Wiring	Parallel
Line Voltage Regulation (+/-)	10 %
Ambient Temperature (MAX)	55° C (131° F)
Case Temperature (MAX)	70° C (158° F)
Ballast Factor	High (1.18)
Power Factor Correction	Active
Sound Rating	A (20-24 decibels)
Enclosure Type	Metal
Additional Info	No PCBs, Anti-striation control

Electrical characteristics

Supply Current Frequency (MIN)	60 Hz

Order information

10 Pack	Pallet Pack	DIY Pack	IP Pack
73233			

Dimensions

Wiring diagram - LFL -2H S60– see example on Page 12-27	
Case dimensions- Ref Drawing -A – see Page 12-29	
Length (L)	9.5 in (241 mm)
Width (W)	1.7 in (43 mm)
Height (H)	1.18 in (30 mm)
Mounting dimensions	
Mount Length (M)	8.9 in (226 mm)
Mount Width (X or F)	1.18 in (30 mm)
Mount Slots (MS)	0.3 in (8 mm)
Weight	1.40 lbs
Exit Type	Side
Remote Mounting Distance to Lamp (F32T8)	18 ft
Remote Mounting Wire Gauge	18 AWG
Lead lengths	**Length (± 1 in.)**
Black	25.0 in (635 mm)
Blue	34.0 in (864 mm)
Red	34.0 in (864 mm)
White	25.0 in (635 mm)
Yellow	41.0 in (1041 mm)

Specifications by lamp and wattage

Lamp	Light Level	# of Lamps	Line Volts	System Watts	Nom. Line Current	System Ballast Factor	Ballast Efficacy Factor	Power Factor % (>=)	Crest Factor (<=)	THD% (<=)	Min. Starting Temp (°F/°C)
	100%	2	120	75	0.63 A	1.18	1.57	99	1.4	10	-22/-30
	100%	2	277	74	0.27 A	1.18	1.59	97	1.4	10	-22/-30
	60%	2	120	44	0.37 A	0.71	1.61	99	1.4	10	-22/-30
	60%	2	277	44	0.17 A	0.71	1.61	94	1.4	17	-22/-30
	100%	1	120	47	0.39 A	1.38	2.94	99	1.4	10	-22/-30
	100%	1	277	47	0.18 A	1.38	2.94	97	1.4	15	-22/-30
	60%	1	120	40	0.34 A	1.26	3.15	99	1.4	10	-22/-30
F32T8	60%	1	277	40	0.15 A	1.26	3.15	93	1.4	18	-22/-30
	100%	2	120	69	0.58 A	1.18	1.71	99	1.4	10	60/16
	100%	2	277	68	0.16 A	0.74	1.09	94	1.4	17	60/16
	60%	2	120	43	0.36 A	0.74	1.72	99	1.4	10	60/16
	60%	2	277	43	0.16 A	0.74	1.72	94	1.4	17	60/16
	100%	1	120	43	0.36 A	1.37	3.19	99	1.4	10	60/16
	100%	1	277	43	0.16 A	1.37	3.19	96	1.4	17	60/16
	60%	1	120	39	0.33 A	1.28	3.28	99	1.4	10	60/16
F32T8/WM	60%	1	277	39	0.15 A	1.28	3.28	96	1.4	18	60/16
	100%	2	120	64	0.53 A	1.18	1.84	99	1.4	10	-22/-30
	100%	2	277	63	0.23 A	1.18	1.87	96	1.4	13	-22/-30
	60%	2	120	43	0.36 A	0.76	1.77	99	1.4	10	-22/-30
	60%	2	277	43	0.16 A	0.76	1.77	93	1.4	17	-22/-30
	100%	1	120	40	0.33 A	1.35	3.38	99	1.4	10	-22/-30
	100%	1	277	40	0.15 A	1.35	3.38	96	1.4	18	-22/-30
	60%	1	120	37	0.31 A	1.32	3.57	99	1.4	10	-22/-30
F28T8	60%	1	277	37	0.14 A	1.32	3.57	93	1.4	19	-22/-30
	100%	2	120	59	0.49 A	1.18	2.00	99	1.4	10	60/16
	100%	2	277	57	0.21 A	1.18	2.07	96	1.4	16	60/16
	60%	2	120	43	0.36 A	0.78	1.81	99	1.4	10	60/16
	60%	2	277	43	0.16 A	0.78	1.81	93	1.4	17	60/16
	100%	1	120	36	0.31 A	1.35	3.75	99	1.4	10	60/16
	100%	1	277	36	0.14 A	1.35	3.75	95	1.4	19	60/16
	60%	1	120	34	0.29 A	1.33	3.91	99	1.4	10	60/16
F32T8/25W	60%	1	277	34	0.13 A	1.33	3.91	93	1.4	22	60/16
	100%	2	120	42	0.35 A	1.17	2.79	99	1.4	10	-22/-30
	100%	2	277	42	0.16 A	1.17	2.79	96	1.4	17	-22/-30
	60%	2	120	38	0.32 A	1.11	2.92	99	1.4	10	-22/-30
	60%	2	277	38	0.14 A	1.11	2.92	96	1.4	18	-22/-30
	100%	1	120	27	0.23 A	1.37	5.07	99	1.4	11	-22/-30
	100%	1	277	27	0.11 A	1.37	5.07	92	1.4	25	-22/-30
	60%	1	120	26	0.21 A	1.36	5.23	99	1.4	12	-22/-30
F17T8	60%	1	277	26	0.10 A	1.36	5.24	92	1.4	30	-22/-30
	100%	1	120	55	0.43 A	1.28	2.33	99	1.4	10	-22/-30
	100%	1	277	55	0.20 A	1.28	2.33	97	1.5	13	-22/-30
	60%	1	120	40	0.34 A	1.13	2.82	99	1.4	10	-22/-30
F40T8	60%	1	277	40	0.15 A	1.13	2.82	96	1.4	18	-22/-30

Safety and performance

UL Type 1 Outdoor UL Type HL ANSI - C82.11 Cons 2002, ANSI - C62.41 - 1991 Product is compliant with material restriction requirements of RoHS

FCC – Part 18 (Class A) for EMI and RFI Non-Consumer Limits cUL Listed UL Type CC High Temperature Rated: Suitable for high temperature applications

70C max case temp 5 yr warranty or 90C max case temp 3 yr warranty NEMA Premium

See page E-1 for warranty information.

UltraMax® Bi-Level Dimming & Load Shed Dimming Instant Start High-Efficiency
T8 Dimming Ballasts

73231 – GE332MAX90-S60

UltraMax® Bi-Level Dimming
Instant Start High-Efficiency
3 – F32T8 120 to 277 "H" 1.18 BF UltraMax® 100/60% step dim

- Bi-Level Switching 100 to 60%
- Anti-Striation Control for better light quality, with no striations.
- UL 55C Ambient Rating - HighTemperature Protection Circuit
- Multi-Voltage Technology handles voltage from 120 to 277V
- UL Type CC Rating provides protection against arcing in electrical devices.
- Cold temperature -22F Minimum Starting Temperature

General characteristics

Ballast Type	Electronic - Dimming
Dimming Type	Step dimming
Starting Method	Instant start
Lamp Wiring	Parallel
Line Voltage Regulation (+/-)	10 %
Ambient Temperature (MAX)	55° C (131° F)
Case Temperature (MAX)	70° C (158° F)
Ballast Factor	High (1.18)
Power Factor Correction	Active
Enclosure Type	Metal
Additional Info	Anti-striation control, Universal voltage, Inherent thermal protection

Electrical characteristics

Supply Current Frequency (MIN)	60 Hz

Order information

10 Pack	Pallet Pack	DIY Pack	IP Pack
73231			

Dimensions

Wiring diagram - LFL -3H S60 – see example on Page 12-27	
Case dimensions- Ref Drawing -A – see Page 12-29	
Length (L)	9.5 in (241 mm)
Width (W)	1.7 in (43 mm)
Height (H)	1.18 in (30 mm)
Mounting dimensions	
Mount Length (M)	8.9 in (226 mm)
Mount Width (X or F)	1.18 in (30 mm)
Mount Slots (MS)	0.3 in (8 mm)
Weight	1.40 lbs
Exit Type	Side
Remote Mounting Distance to Lamp (F32T8)	18 ft
Remote Mounting Wire Gauge	18 AWG
Lead lengths	**Length (± 1 in.)**
Black	25.0 in (635mm)
Blue	34.0 in (864mm)
Red	34.0 in (864mm)
White	25.0 in (635mm)
Yellow	41.0 in (1041 mm)

Specifications by lamp and wattage

Lamp	Light Level	# of Lamps	Line Volts	System Watts	Nom. Line Current	System Ballast Factor	Ballast Efficacy Factor	Power Factor % (>=)	Crest Factor (<=)	THD% (<=)	Min. Starting Temp (°F/°C)
	100%	3	120	113	0.94 A	1.18	1.04	99	1.4	10	-22/-30
	100%	3	277	110	0.40 A	1.18	1.07	97	1.4	10	-22/-30
	60%	3	120	66	0.55 A	0.71	1.08	99	1.4	10	-22/-30
	60%	3	277	66	0.25 A	0.71	1.08	94	1.4	17	-22/-30
	100%	2	120	86	0.72 A	1.29	1.50	99	1.4	10	-22/-30
	100%	2	277	85	0.32 A	1.29	1.52	97	1.4	13	-22/-30
	60%	2	120	61	0.51 A	0.99	1.62	99	1.4	10	-22/-30
F32T8	60%	2	277	61	0.23 A	0.99	1.62	93	1.4	18	-22/-30
	100%	3	120	103	0.86 A	1.18	1.15	99	1.4	10	60/16
	100%	3	277	101	0.37 A	1.18	1.17	97	1.4	10	60/16
	60%	3	120	66	0.55 A	0.75	1.14	99	1.4	10	60/16
	60%	3	277	62	0.23 A	0.75	1.21	96	1.4	17	60/16
	100%	2	120	79	0.66 A	1.26	1.59	99	1.4	10	60/16
	100%	2	277	78	0.29 A	1.26	1.62	96	1.4	16	60/16
	60%	2	120	63	0.52 A	1.05	1.67	99	1.4	10	60/16
F32T8/WM	60%	2	277	63	0.24 A	1.05	1.67	93	1.4	18	60/16
	100%	3	120	95	0.79 A	1.18	1.24	99	1.4	10	60/16
	100%	3	277	93	0.34 A	1.18	1.27	96	1.4	13	60/16
	60%	3	120	66	0.56 A	0.75	1.14	99	1.4	10	60/16
	60%	3	277	65	0.24 A	0.75	1.15	93	1.4	17	60/16
	100%	2	120	72	0.61 A	1.26	1.75	99	1.4	10	-22/-30
	100%	2	277	71	0.27 A	1.26	1.77	96	1.4	16	-22/-30
	60%	2	120	64	0.53 A	1.05	1.64	99	1.4	10	-22/-30
F28T8	60%	2	277	63	0.24 A	1.05	1.67	93	1.4	18	-22/-30
	100%	3	120	91	0.77 A	1.18	1.30	99	1.4	10	60/16
	100%	3	277	89	0.32 A	1.18	1.33	96	1.4	16	60/16
	60%	3	120	67	0.56 A	0.80	1.19	99	1.4	10	60/16
	60%	3	277	66	0.25 A	0.80	1.21	93	1.4	17	60/16
	100%	2	120	67	0.56 A	1.26	1.88	99	1.4	10	60/16
	100%	2	277	66	0.25 A	1.26	1.91	96	1.4	16	60/16
	60%	2	120	64	0.53 A	1.05	1.64	99	1.4	10	60/16
F32T8/25W	60%	2	277	63	0.24 A	1.05	1.67	93	1.4	17	60/16
	100%	3	120	62	0.52 A	1.15	1.85	99	1.4	10	-22/-30
	100%	3	277	61	0.23 A	1.15	1.89	96	1.4	17	-22/-30
	60%	3	120	59	0.50 A	1.14	1.93	99	1.4	10	-22/-30
	60%	3	277	58	0.22 A	1.14	1.97	96	1.4	17	-22/-30
	100%	2	120	48	0.40 A	1.27	2.65	99	1.4	10	-22/-30
	100%	2	277	48	0.19 A	1.25	2.60	94	1.4	19	-22/-30
	60%	2	120	47	0.40 A	1.25	2.66	99	1.4	10	-22/-30
F17T8	60%	2	277	47	0.18 A	1.25	2.66	94	1.4	19	-22/-30
	100%	2	120	102	0.85 A	1.22	1.20	99	1.4	10	-22/-30
	100%	2	277	100	0.37 A	1.22	1.22	98	1.4	10	-22/-30
	60%	2	120	61	0.51 A	0.68	1.11	99	1.4	10	-22/-30
F40T8	60%	2	277	61	0.23 A	0.68	1.11	96	1.4	16	-22/-30

Safety and performance

UL Type 1 Outdoor UL Type HL ANSI - C82.11 Cons 2002, ANSI - C62.41 - 1991 Product is compliant with material restriction requirements of RoHS

FCC – Part 18 (Class A) for EMI and RFI Non-Consumer Limits cUL Listed UL Type CC High Temperature Rated: Suitable for high temperature applications

70C max case temp 5 yr warranty or 90C max case temp 3 yr warranty NEMA Premium

See page E-1 for warranty information.

UltraMax® Bi-Level Dimming & Load Shed Dimming Instant Start High-Efficiency
T8 Dimming Ballasts

73229 – GE432MAX90-S60

UltraMax® Bi-Level Dimming
Instant Start High-Efficiency

4 – F32T8 120 to 277 "H" 1.18 BF UltraMax® 100/60% step dim

- Bi-Level Switching 100 to 60%
- Anti-Striation Control for better light quality, with no striations.
- UL 55C Ambient Rating - HighTemperature Protection Circuit
- Multi-Voltage Technology handles voltage from 120 to 277V
- UL Type CC Rating provides protection against arcing in electrical devices.
- Cold temperature -22F Minimum Starting Temperature

General characteristics

Ballast Type	Electronic - Dimming
Dimming Type	Step dimming
Starting Method	Instant start
Lamp Wiring	Parallel
Line Voltage Regulation (+/-)	10 %
Ambient Temperature (MAX)	55° C (131° F)
Case Temperature (MAX)	70° C (158° F)
Ballast Factor	High (1.18)
Power Factor Correction	Active
Enclosure Type	Metal
Additional Info	Anti-striation control, Universal voltage, Inherent thermal protection

Electrical characteristics

Supply Current Frequency (MIN)	60 Hz

Order information

10 Pack	Pallet Pack	DIY Pack	IP Pack
73231			

Dimensions

Wiring diagram - LFL -4H S60 – see example on Page 12-26	
Case dimensions- Ref Drawing -A – see Page 12-29	
Length (L)	9.5 in (241 mm)
Width (W)	1.7 in (43 mm)
Height (H)	1.18 in (30 mm)
Mounting dimensions	
Mount Length (M)	8.9 in (226 mm)
Mount Width (X or F)	1.18 in (30 mm)
Mount Slots (MS)	0.3 in (8 mm)
Weight	1.40 lbs
Exit Type	Side
Remote Mounting Distance to Lamp (F32T8)	18 ft
Remote Mounting WireGauge	18 AWG
Lead lengths Qty Exit	**Length (± 1 in.)**
Black	25.0 in (635 mm)
Blue	34.0 in (864 mm)
Red	34.0 in (864 mm)
White	25.0 in (635 mm)
Yellow	41.0 in (1041 mm)

Specifications by lamp and wattage

Lamp	Light Level	# of Lamps	Line Volts	System Watts	Nom. Line Current	System Ballast Factor	Ballast Efficacy Factor	Power Factor % (>=)	Crest Factor (<=)	THD% (<=)	Min. Starting Temp (°F/°C)
	100%	4	120	149	1.25 A	1.18	0.79	99	1.4	10	-22/-30
	100%	4	277	146	0.54 A	0.71	0.49	97	1.4	10	-22/-30
	60%	4	120	88	0.74 A	0.71	0.81	99	1.4	10	-22/-30
	60%	4	277	87	0.34 A	0.71	0.82	94	1.4	17	-22/-30
	100%	3	120	119	1.02 A	1.28	1.08	99	1.4	10	-22/-30
	100%	3	277	116	0.46 A	1.28	1.10	97	1.4	13	-22/-30
	60%	3	120	75	0.63 A	0.78	1.04	99	1.4	10	-22/-30
F32T8	60%	3	277	75	0.28 A	0.78	1.04	93	1.4	18	-22/-30
	100%	4	120	136	1.14 A	0.73	0.54	99	1.4	10	60/16
	100%	4	277	133	0.49 A	1.18	0.89	97	1.4	10	60/16
	60%	4	120	83	0.70 A	0.73	0.88	99	1.4	10	60/16
	60%	4	277	83	0.31 A	0.73	0.88	94	1.4	17	60/16
	100%	3	120	113	0.95 A	1.25	1.11	99	1.4	10	60/16
	100%	3	277	112	0.41 A	1.25	1.12	96	1.4	16	60/16
	60%	3	120	71	0.59 A	0.79	1.11	99	1.4	10	60/16
F32T8/WM	60%	3	277	71	0.27 A	0.79	1.11	93	1.4	18	60/16
	100%	4	120	127	1.07 A	1.18	0.93	99	1.4	10	-22/-30
	100%	4	277	125	0.48 A	1.18	0.94	96	1.4	13	-22/-30
	60%	4	120	78	0.65 A	0.74	0.95	99	1.4	10	-22/-30
	60%	4	277	78	0.29 A	0.74	0.95	93	1.4	17	-22/-30
	100%	3	120	103	0.86 A	1.24	1.20	99	1.4	10	-22/-30
	100%	3	277	102	0.38 A	1.24	1.22	96	1.4	16	-22/-30
	60%	3	120	68	0.26 A	0.80	1.18	99	1.4	10	-22/-30
F28T8	60%	3	277	68	0.26 A	0.80	1.18	93	1.4	18	-22/-30
	100%	4	120	116	0.96 A	1.18	1.02	99	1.4	10	60/16
	100%	4	277	114	0.43 A	1.18	1.04	96	1.4	16	60/16
	60%	4	120	75	0.63 A	0.75	1.00	99	1.4	10	60/16
	60%	4	277	75	0.28 A	0.75	1.00	93	1.4	17	60/16
	100%	3	120	96	0.80 A	1.24	1.29	99	1.4	10	60/16
	100%	3	277	95	0.35 A	1.24	1.31	97	1.4	16	60/16
	60%	3	120	66	0.55 A	0.80	1.21	99	1.4	10	60/16
F32T8/25W	60%	3	277	66	0.49 A	0.80	1.21	93	1.4	17	60/16
	100%	4	120	81	0.69 A	1.17	1.44	99	1.4	10	-22/-30
	100%	4	277	80	0.32 A	1.17	1.46	96	1.4	14	-22/-30
	60%	4	120	64	0.54 A	0.95	1.48	99	1.4	10	-22/-30
	60%	4	277	64	0.25 A	0.95	1.48	94	1.4	17	-22/-30
	100%	3	120	62	0.58 A	1.25	2.02	99	1.4	10	-22/-30
	100%	3	277	62	0.24 A	1.25	2.02	95	1.4	18	-22/-30
	60%	3	120	59	0.49 A	1.24	2.10	99	1.4	10	-22/-30
F17T8	60%	3	277	59	0.23 A	1.24	2.10	93	1.5	18	-22/-30
	100%	3	120	146	1.22 A	1.22	0.84	99	1.4	10	-22/-30
	100%	3	277	143	0.53 A	1.22	0.85	97	1.4	10	-22/-30
	60%	3	120	84	0.70 A	0.66	0.79	99	1.4	10	-22/-30
F40T8	60%	3	277	83	0.31 A	0.66	0.80	96	1.4	14	-22/-30

Safety and performance

UL Type 1 Outdoor UL Type HL ANSI - C82.11 Cons 2002, ANSI - C62.41 - 1991 Product is compliant with material restriction requirements of RoHS

FCC – Part 18 (Class A) for EMI and RFI Non-Consumer Limits cUL Listed UL Type CC High Temperature Rated: Suitable for high temperature applications

70C max case temp 5 yr warranty or 90C max case temp 3 yr warranty NEMA Premium

See page E-1 for warranty information.

UltraMax® Bi-Level Dimming & Load Shed Dimming Instant Start High-Efficiency T8 Dimming Ballasts

71497 – GE632MAX-H90-S60

UltraMax® Bi-Level Dimming
Instant Start High-Efficiency

6, 5, 4 – F32T8 120 to 277 "H" 1.18 BF UltraMax® 100/60% step dim

- Bi-Level Switching 100 to 60%
- Extreme 95% Electrical Efficiency
- UL 55C Ambient Rating - HighTemperature Protection Circuit
- Cold temperature -20F Minimum Starting Temperature

General characteristics

Ballast Type	Electronic - Dimming
Dimming Type	Step dimming
Starting Method	Instant start
Lamp Wiring	Parallel
Line Voltage Regulation (+/-)	10 %
Ambient Temperature (MAX)	55° C (131° F)
Case Temperature (MAX)	70° C (158° F)
Ballast Factor	High (1.18)
Power Factor Correction	Active
Sound Rating	A (20-24 decibels)
Enclosure Type	Metal
Additional Info	Anti-striation control, Universal voltage, Inherent thermal protection

Electrical characteristics

Supply Current Frequency (MIN)	60 Hz

Order information

10 Pack	Pallet Pack	DIY Pack	IP Pack
71497			

Dimensions

Wiring diagram - LFL -6H S60 – see example on Page 12-26	
Case dimensions- Ref Drawing -A – see Page 12-29	
Length (L)	11.75 in (299 mm)
Width (W)	1.7 in (43 mm)
Height (H)	1.18 in (30 mm)
Mounting dimensions	
Mount Length (M)	11.1 in (283 mm)
Mount Slots (MS)	0.3 in (8 mm)
Weight	3.10 lbs
Exit Type	Side
Remote Mounting Distance to Lamp (F32T8)	18 ft
Remote Mounting Wire Gauge	18 AWG
Lead lengths	**Length (± 1 in.)**
Black	25.0 in (635 mm)
Blue	34.0 in (864 mm)
Gray	25.0 in (635 mm)
Red	34.0 in (864 mm)
Yellow	41.0 in (1041 mm)
White	25.0 in (635 mm)

Specifications by lamp and wattage

Lamp	Light Level	# of Lamps	Line Volts	System Watts	Nom. Line Current	System Ballast Factor	Ballast Efficacy Factor	Power Factor % (>=)	Crest Factor (<=)	THD% (<=)	Min. Starting Temp (°F/°C)
	100%	6	120	221	1.94 A	1.18	0.53	99	1.4	10	-20/-29
	100%	6	277	215	0.82 A	1.18	0.55	97	1.4	10	-20/-29
	60%	6	120	133	1.13 A	0.71	0.53	99	1.4	1	-20/-29
	60%	6	277	132	0.53 A	0.71	0.54	94	1.4	17	-20/-29
	100%	5	120	197	1.73 A	1.25	0.63	99	1.4	10	-20/-29
	100%	5	277	192	0.73 A	1.25	0.65	97	1.4	13	-20/-29
	60%	5	120	123	1.04 A	0.77	0.63	99	1.4	10	-20/-29
F32T8	60%	5	277	122	0.49 A	0.77	0.63	93	1.4	18	-20/-29
	100%	6	120	205	1.80 A	1.18	0.58	99	1.4	10	60/16
	100%	6	277	200	0.76 A	1.18	0.59	97	1.4	10	60/16
	60%	6	120	128	1.09 A	0.71	0.55	99	1.4	10	60/16
	60%	6	277	127	0.51 A	0.71	0.56	94	1.4	17	60/16
	100%	5	120	182	1.60 A	1.23	0.68	99	1.4	10	60/16
	100%	5	277	178	0.68 A	1.23	0.69	96	1.4	16	60/16
	60%	5	120	121	1.03 A	0.82	0.68	99	1.4	10	60/16
F32T8/WM	60%	5	277	120	0.49 A	0.82	0.68	93	1.4	18	60/16
	100%	6	120	187	1.64 A	1.18	0.63	99	1.4	10	60/16
	100%	6	277	184	0.70 A	1.18	0.64	96	1.4	13	60/16
	60%	6	120	123	1.05 A	0.74	0.60	99	1.4	10	60/16
	60%	6	277	122	0.50 A	0.74	0.61	93	1.4	17	60/16
	100%	5	120	166	1.45 A	1.20	0.72	99	1.4	10	60/16
	100%	5	277	164	0.63 A	1.20	0.73	96	1.4	16	60/16
	60%	5	120								
F28T8	60%	5	277	118	0.48 A	0.86	0.73	93	1.4	18	60/16
	100%	6	120	178	1.57 A	1.18	0.66	99	1.4	10	60/16
	100%	6	277	176	0.68 A	1.18	0.67	96	1.4	16	60/16
	60%	6	120	122	1.03 A	0.70	0.57	99	1.4	10	60/16
F32T8/25W	60%	6	277	121	0.49 A	0.70	0.58	93	1.4	17	60/16
	100%	5	120	159	1.40 A	1.16	0.73	99	1.4	10	-20/-29
	100%	5	277	157	0.61 A	1.16	0.74	95	1.4	18	-20/-29
	60%	5	120	118	1.01 A	0.87	0.74	99	1.4	10	-20/-29
F25T8	60%	5	277	117	0.48 A	0.87	0.74	93	1.4	20	-20/-29
	100%	6	120	122	1.08 A	1.17	0.96	99	1.4	10	-20/-29
	100%	6	277	121	0.50 A	1.17	0.97	90	1.4	24	-20/-29
	60%	6	120	104	0.88 A	1.03	0.99	99	1.4	10	-20/-29
	60%	6	277	103	0.43 A	1.03	1.00	89	1.4	24	-20/-29
	100%	5	120	107	0.95 A	1.24	1.16	99	1.4	10	-20/-29
	100%	5	277	106	0.44 A	1.24	1.17	88	1.4	26	-20/-29
	60%	5	120	98	0.83 A	1.16	1.18	99	1.4	10	-20/-29
F17T8	60%	5	277	98	0.42 A	1.16	1.18	88	1.4	26	-20/-29
	100%	5	120	231	2.03 A	1.18	0.51	99	1.4	10	0/-18
	100%	5	277	225	0.86 A	1.18	0.52	97	1.4	10	0/-18
	60%	5	120	131	1.12 A	0.64	0.49	99	1.4	10	0/-18
F40T8	60%	5	277	130	0.53 A	0.64	0.49	94	1.4	17	0/-18

Safety and performance

UL Type 1 Outdoor UL Type HL ANSI - C82.11 Cons 2002, ANSI - C62.41 - 1991 Product is compliant with material restriction requirements of RoHS

FCC – Part 18 (Class A) for EMI and RFI Non-Consumer Limits cUL Listed UL Type CC High Temperature Rated: Suitable for high temperature applications

70C max case temp 5 yr warranty or 90C max case temp 3 yr warranty NEMA Premium

See page E-1 for warranty information.

UltraMax® Bi-Level Dimming & Load Shed Dimming Instant Start High-Efficiency
T8 Dimming Ballasts

73234 – GE232MAX90-V60

UltraMax® Load Shed Dimming
Instant Start High-Efficiency

2 or 1 – F32T8 120 to 277 "H" 1.18 BF UltraMax® 0-10V 100-60% dim

- Load Shed Variable Dimming 0-10V 100% to 60%
- Anti-Striation Control for better light quality, with no striations.
- UL 55C Ambient Rating - HighTemperature Protection Circuit
- Multi-Voltage Technology handles voltage from 120 to 277V
- UL Type CC Rating provides protection against arcing in electrical devices.
- Cold temperature -22F Minimum Starting Temperature

General characteristics

Ballast Type	Electronic - Dimming
Dimming Type	Continuous
Starting Method	Instant start
Lamp Wiring	Parallel
Line Voltage Regulation (+/-)	10 %
Ambient Temperature (MAX)	55° C (131° F)
Case Temperature(MAX)	70° C (158° F)
Ballast Factor	High (1.18)
Power Factor Correction	Active
Sound Rating	A (20-24 decibels)
Enclosure Type	Metal
Additional Info	No PCBs, Anti-striation control

Electrical characteristics

Supply Current Frequency (MIN)	60 Hz

Order information

10 Pack	Pallet Pack	DIY Pack	IP Pack
73234			

Dimensions

Wiring diagram - LFL -2H V60 – see example on Page 12-27	
Case dimensions- Ref Drawing -A – see Page 12-29	
Length (L)	9.5 in (241 mm)
Width (W)	1.7 in (43 mm)
Height (H)	1.18 in (30 mm)
Mounting dimensions	
Mount Length (M)	8.9 in (226 mm)
Mount Width (X or F)	1.18 in (30 mm)
Mount Slots (MS)	0.3 in (8 mm)
Weight	1.40 lbs
Exit Type	Side
Remote Mounting Distance to Lamp (F32T8)	18 ft
Remote Mounting Wire Gauge	18 AWG
Lead lengths	**Length (± 1 in.)**
Black	25.0 in (635 mm)
Blue	34.0 in (864 mm)
Gray	25.0 in (635 mm)
Red	34.0 in (864 mm)
Violet	25.0 in (635 mm)
White	25.0 in (635 mm)
Yellow	41.0 in (1041 mm)

Specifications by lamp and wattage

Lamp	Light Level	# of Lamps	Line Volts	System Watts	Nom. Line Current	System Ballast Factor	Ballast Efficacy Factor	Power Factor % (>=)	Crest Factor (<=)	THD% (<=)	Min. Starting Temp (°F/°C)
	100%	2	120	75	0.63 A	1.18	1.57	99	1.4	10	-22/-30
	100%	2	277	74	0.28 A	1.18	1.59	96	1.4	10	-22/-30
	60%	2	120	44	0.36 A	0.71	1.61	99	1.4	10	-22/-30
	60%	2	277	43	0.17 A	0.71	1.65	94	1.4	18	-22/-30
	100%	1	120	47	0.39 A	1.38	2.94	99	1.4	10	-22/-30
	100%	1	277	47	0.18 A	1.38	2.94	92	1.4	18	-22/-30
	60%	1	120	45	0.38 A	1.34	2.98	99	1.4	10	-22/-30
F32T8	60%	1	277	45	0.18 A	1.34	2.98	92	1.4	18	-22/-30
	100%	2	120	69	0.57 A	1.18	1.71	99	1.4	10	60/16
	100%	2	277	68	0.25 A	1.18	1.74	96	1.4	11	60/16
	60%	2	120	46	0.39 A	0.77	1.67	99	1.4	10	60/16
	60%	2	277	46	0.18 A	0.77	1.67	92	1.4	18	60/16
	100%	1	120	43	0.36 A	1.37	3.19	99	1.4	10	60/16
	100%	1	277	43	0.17 A	1.37	3.19	92	1.4	20	60/16
	60%	1	120	42	0.35 A	1.36	3.24	99	1.4	10	60/16
F32T8/WM	60%	1	277	42	0.17 A	1.36	3.24	91	1.4	21	60/16
	100%	2	120	63	0.53 A	1.18	1.87	99	1.4	10	-22/-30
	100%	2	277	62	0.24 A	1.18	1.90	95	1.4	13	-22/-30
	60%	2	120	46	0.39 A	0.79	1.72	99	1.4	10	-22/-30
	60%	2	277	46	0.18 A	0.79	1.72	92	1.4	19	-22/-30
	100%	1	120	39	0.33 A	1.35	3.46	99	1.4	10	-22/-30
	100%	1	277	39	0.16 A	1.35	3.46	90	1.4	26	-22/-30
	60%	1	120	38	0.32 A	1.34	3.53	99	1.4	10	-22/-30
F28T8	60%	1	277	38	0.16 A	1.34	3.53	90	1.4	26	-22/-30
	100%	2	120	59	0.48 A	1.18	2.00	99	1.4	10	60/16
	100%	2	277	57	0.22 A	1.18	2.07	94	1.4	16	60/16
	60%	2	120	46	0.38 A	0.81	1.76	99	1.4	10	60/16
	60%	2	277	46	0.18 A	0.81	1.76	92	1.4	19	60/16
	query	1	120	36	0.30 A	1.35	3.75	99	1.4	10	60/16
	query	1	277	36	0.15 A	1.35	3.75	88	1.4	26	60/16
	query	1	120	36	0.30 A	1.35	3.75	99	1.4	10	60/16
F32T8/25W	query	1	277	36	0.15 A	1.35	3.75	88	1.4	26	60/16
	100%	2	120	42	0.35 A	1.17	2.79	99	1.4	10	-22/-30
	100%	2	277	42	0.17 A	1.17	2.79	90	1.4	24	-22/-30
	60%	2	120	41	0.34 A	1.16	2.83	99	1.4	10	-22/-30
F17T8	60%	2	277	41	0.16 A	1.16	2.83	90	1.4	24	-22/-30
	100%	1	120	56	0.46 A	1.28	2.29	99	1.4	10	-22/-30
	100%	1	277	55	0.21 A	1.28	2.33	94	1.4	15	-22/-30
	60%	1	120	46	0.39 A	1.18	2.57	99	1.4	10	-22/-30
F40T8	60%	1	277	46	0.18 A	1.18	2.57	92	1.4	18	-22/-30

Safety and performance

UL Type 1 Outdoor UL Type HL ANSI - C82.11 Cons 2002, ANSI - C62.41 - 1991 Product is compliant with material restriction requirements of RoHS

FCC – Part 18 (Class A) for EMI and RFI Non-Consumer Limits cUL Listed UL Type CC High Temperature Rated: Suitable for high temperature applications

70C max case temp 5 yr warranty or 90C max case temp 3 yr warranty NEMA Premium

See page E-1 for warranty information.

UltraMax® Bi-Level Dimming & Load Shed Dimming Instant Start High-Efficiency
T8 Dimming Ballasts

73232 – GE332MAX90-V60

UltraMax® Load Shed Dimming
Instant Start High-Efficiency
3 – F32T8 120 to 277 "H" 1.18 BF UltraMax® 0-10V 100-60% dim

- Load Shed Variable Dimming 0-10V 100% to 60%
- Anti-Striation Control for better light quality, with no striations.
- UL 55C Ambient Rating - HighTemperature Protection Circuit
- Multi-Voltage Technology handles voltage from 120 to 277V
- UL Type CC Rating provides protection against arcing in electrical devices.
- Cold temperature -22F Minimum Starting Temperature

General characteristics

Ballast Type	Electronic - Dimming
Dimming Type	Continuous
Starting Method	Instant start
Lamp Wiring	Parallel
Line Voltage Regulation (+/-)	10 %
Ambient Temperature (MAX)	55° C (131° F)
Case Temperature (MAX)	70° C (158° F)
Ballast Factor	High (1.18)
Power Factor Correction	Active
Sound Rating	A (20-24 decibels)
Enclosure Type	Metal
Additional Info	No PCBs, Anti-striation control

Electrical characteristics

Supply Current Frequency (MIN)	60 Hz

Order information

10 Pack	Pallet Pack	DIY Pack	IP Pack
73232			

Dimensions

Wiring diagram - LFL -3H V60 – see example on Page 12-27	
Case dimensions- Ref Drawing -A – see Page 12-29	
Length (L)	9.5 in (241 mm)
Width (W)	1.7 in (43 mm)
Height (H)	1.18 in (30 mm)
Mounting dimensions	
Mount Length (M)	8.9 in (226 mm)
Mount Width (X or F)	1.18 in (30 mm)
Mount Slots (MS)	0.3 in (8 mm)
Weight	1.40 lbs
Exit Type	Side
Remote Mounting Distance to Lamp (F32T8)	18 ft
Remote Mounting Wire Gauge	18 AWG
Lead lengths	**Length (± 1 in.)**
Blue	34.0 in (864 mm)
Violet	25.0 in (635 mm)
Red	34.0 in (864 mm)
Yellow	41.0 in (1041 mm)
Black	25.0 in (635 mm)
White	25.0 in (635 mm)
Gray	25.0 in (635 mm)

Specifications by lamp and wattage

Lamp	Light Level	# of Lamps	Line Volts	System Watts	Nom. Line Current	System Ballast Factor	Ballast Efficacy Factor	Power Factor % (>=)	Crest Factor (<=)	THD% (<=)	Min. Starting Temp (°F/°C)
	100%	3	120	113	0.94 A	1.18	1.04	99	1.4	10	-22/-30
	100%	3	277	110	0.41 A	1.18	1.07	97	1.4	10	-22/-30
	60%	3	120	66	0.55 A	0.71	1.08	99	1.4	10	-22/-30
	60%	3	277	65	0.25 A	0.71	1.09	94	1.4	17	-22/-30
	100%	2	120	85	0.72 A	1.29	1.52	99	1.4	10	-22/-30
	100%	2	277	84	0.32 A	1.29	1.54	97	1.4	13	-22/-30
	60%	2	120	72	0.62 A	1.05	1.46	99	1.4	10	-22/-30
F32T8	60%	2	277	72	0.28 A	1.05	1.46	93	1.4	18	-22/-30
	100%	3	120	104	0.91 A	1.18	1.13	99	1.4	10	60/16
	100%	3	277	102	0.38 A	1.18	1.16	97	1.4	10	60/16
	60%	3	120	72	0.61 A	0.78	1.08	99	1.4	10	60/16
	60%	3	277	71	0.28 A	0.78	1.10	94	1.4	17	60/16
	100%	2	120	79	0.67 A	1.26	1.59	99	1.4	10	60/16
	100%	2	277	78	0.30 A	1.26	1.62	96	1.4	16	60/16
	60%	2	120	65	0.61 A	1.07	1.65	99	1.4	10	60/16
F32T8/WM	60%	2	277	65	0.27 A	1.07	1.65	93	1.4	18	60/16
	100%	3	120	95	0.81 A	1.18	1.24	99	1.4	10	60/16
	100%	3	277	94	0.35 A	1.18	1.26	96	1.4	13	60/16
	60%	3	120	71	0.64 A	0.87	1.23	99	1.4	10	60/16
	60%	3	277	70	0.28 A	0.87	1.24	93	1.4	17	60/16
	100%	2	120	73	0.61 A	1.26	1.73	99	1.4	10	-22/-30
	100%	2	277	72	0.27 A	1.26	1.75	95	1.4	16	-22/-30
	60%	2	120	68	0.57 A	1.10	1.62	99	1.4	10	-22/-30
F28T8	60%	2	277	67	0.25 A	1.10	1.64	93	1.4	18	-22/-30
	100%	3	120	91	0.77 A	1.18	1.30	99	1.4	10	60/16
	100%	3	277	89	0.33 A	1.18	1.33	96	1.4	16	60/16
	60%	3	120	71	0.63 A	0.89	1.25	99	1.4	10	60/16
	60%	3	277	70	0.28 A	0.89	1.27	93	1.4	17	60/16
	100%	2	120	69	0.57 A	1.26	1.83	99	1.4	10	60/16
	100%	2	277	68	0.26 A	1.26	1.85	95	1.4	17	60/16
	60%	2	120	64	0.54 A	1.15	1.80	99	1.4	10	60/16
F32T8/25W	60%	2	277	63	0.24 A	1.15	1.83	93	1.4	17	60/16
	100%	3	120	61	0.54 A	1.15	1.88	99	1.4	10	-22/-30
	100%	3	277	60	0.24 A	1.15	1.92	95	1.4	17	-22/-30
	60%	3	120	58	0.51 A	1.14	1.97	99	1.4	10	-22/-30
	60%	3	277	58	0.23 A	1.14	1.97	94	1.4	17	-22/-30
	100%	2	120	47	0.41 A	1.27	2.70	99	1.4	10	-22/-30
	100%	2	277	47	0.20 A	1.27	2.70	91	1.4	21	-22/-30
	60%	2	120	45	0.40 A	1.25	2.78	99	1.4	10	-22/-30
F17T8	60%	2	277	45	0.19 A	1.25	2.78	91	1.4	20	-22/-30
	100%	2	120	104	0.87 A	1.22	1.17	99	1.4	10	-22/-30
	100%	2	277	102	0.38 A	1.22	1.20	97	1.4	10	-22/-30
	60%	2	120	66	0.61 A	0.68	1.03	99	1.4	10	-22/-30
F40T8	60%	2	277	65	0.27 A	0.68	1.05	96	1.4	14	-22/-30

Safety and performance

UL Type 1 Outdoor UL Type HL ANSI - C82.11 Cons 2002, ANSI - C62.41 - 1991 Product is compliant with material restriction requirements of RoHS

FCC – Part 18 (Class A) for EMI and RFI Non-Consumer Limits cUL Listed UL Type CC NEMA Premium

High Temperature Rated: Suitable for high temperature applications 70C max case temp 5 yr warranty or 90C max case temp 3 yr warranty

See page E-1 for warranty information.

UltraMax® Bi-Level Dimming & Load Shed Dimming Instant Start High-Efficiency T8 Dimming Ballasts

73230 – GE432MAX90-V60

UltraMax® Load Shed Dimming
Instant Start High-Efficiency

4 – F32T8 120 to 277 "H" 1.18 BF UltraMax® 0-10V 100-60% dim

- Load Shed Variable Dimming 0-10V 100% to 60%
- Anti-Striation Control for better light quality, with no striations.
- UL 55C Ambient Rating - HighTemperature Protection Circuit
- Multi-Voltage Technology handles voltage from 120 to 277V
- UL Type CC Rating provides protection against arcing in electrical devices.
- Cold temperature -22F Minimum Starting Temperature

General characteristics

Ballast Type	Electronic - Dimming
Dimming Type	Continuous
Starting Method	Instant start
Lamp Wiring	Parallel
Line Voltage Regulation (+/-)	10 %
Ambient Temperature (MAX)	55° C (131° F)
Case Temperature (MAX)	70° C (158° F)
Ballast Factor	High (1.18)
Power Factor Correction	Active
Sound Rating	A (20-24 decibels)
Enclosure Type	Metal
Additional Info	No PCBs, Anti-striation control

Electrical characteristics

Supply Current Frequency (MIN)	60 Hz

Order information

10 Pack	Pallet Pack	DIY Pack	IP Pack
73230			

Dimensions

Wiring diagram - LFL-4H V60 – see example on Page 12-26	
Case dimensions- Ref Drawing -A – see Page 12-29	
Length (L)	9.5 in (241 mm)
Width (W)	1.7 in (43 mm)
Height (H)	1.18 in (30 mm)
Mounting dimensions	
Mount Length (M)	8.9 in (226 mm)
Mount Width (X or F)	1.18 in (30 mm)
Mount Slots (MS)	0.3 in (8 mm)
Weight	1.40 lbs
Exit Type	Side
Remote Mounting Distance to Lamp (F32T8)	18 ft
Remote Mounting Wire Gauge	18 AWG
Lead lengths	**Length (± 1 in.)**
Black	25.0 in (635 mm)
Blue	34.0 in (864 mm)
Gray	25.0 in (635 mm)
Red	34.0 in (864 mm)
Violet	25.0 in (635 mm)
White	25.0 in (635 mm)
Yellow	41.0 in (1041 mm)

Specifications by lamp and wattage

Lamp	Light Level	# of Lamps	Line Volts	System Watts	Nom. Line Current	System Ballast Factor	Ballast Efficacy Factor	Power Factor % (>=)	Crest Factor (<=)	THD% (<=)	Min. Starting Temp (°F/°C)
	100%	4	120	149	1.25 A	1.18	0.79	99	1.4	10	-22/-30
	100%	4	277	146	0.54 A	1.18	0.81	97	1.4	10	-22/-30
	60%	4	120	88	0.74 A	0.71	0.81	99	1.4	10	-22/-30
	60%	4	277	87	0.34 A	0.71	0.82	94	1.4	17	-22/-30
	100%	3	277	116	0.46 A	1.28	1.10	96	1.4	13	-22/-30
	100%	3	120	119	1.02 A	1.28	1.08	99	1.4	10	-22/-30
	60%	3	120	84	0.70 A	0.89	1.06	99	1.4	10	-22/-30
F32T8	60%	3	277	83	0.32 A	0.89	1.07	93	1.4	18	-22/-30
	100%	4	120	136	1.14 A	0.73	0.54	99	1.4	10	60/16
	100%	4	277	133	0.49 A	1.18	0.89	97	1.4	10	60/16
	60%	4	120	93	0.78 A	0.77	0.83	99	1.4	10	60/16
	60%	4	277	92	0.35 A	0.77	0.84	94	1.4	17	60/16
	100%	3	120	113	0.95 A	1.25	1.11	99	1.4	10	60/16
	100%	3	277	111	0.42 A	1.25	1.13	96	1.4	16	60/16
	60%	3	120	89	0.75 A	0.91	1.02	99	1.4	10	60/16
F32T8/WM	60%	3	277	89	0.34 A	0.91	1.02	93	1.4	18	60/16
	100%	4	120	127	1.07 A	1.18	0.93	99	1.4	10	60/16
	100%	4	277	125	0.48 A	1.18	0.94	96	1.4	13	60/16
	60%	4	120	95	0.79 A	0.87	0.92	99	1.4	10	60/16
	60%	4	277	94	0.36 A	0.87	0.93	93	1.4	17	60/16
	100%	3	120	104	0.86 A	1.24	1.19	99	1.4	10	-22/-30
	100%	3	277	102	0.38 A	1.24	1.22	95	1.4	16	-22/-30
	60%	3	120	89	0.74 A	1.18	1.33	99	1.4	10	-22/-30
F28T8	60%	3	277	89	0.34 A	1.18	1.33	93	1.4	18	-22/-30
	100%	4	120	116	0.96 A	1.18	1.02	99	1.4	10	60/16
	100%	4	277	114	0.43 A	1.18	1.04	96	1.4	16	60/16
	60%	4	120	94	0.79 A	0.87	0.93	99	1.4	10	60/16
	60%	4	277	93	0.36 A	0.87	0.94	93	1.4	17	60/16
	100%	3	120	95	0.80 A	1.24	1.31	99	1.4	10	60/16
	100%	3	277	94	0.36 A	1.24	1.32	94	1.4	16	60/16
	60%	3	120	90	0.75 A	1.22	1.36	99	1.4	10	60/16
F32T8/25W	60%	3	277	89	0.34 A	1.22	1.37	93	1.4	17	60/16
	100%	4	120	81	0.69 A	1.17	1.44	99	1.4	10	-22/-30
	100%	4	277	80	0.32 A	1.17	1.46	96	1.4	14	-22/-30
	60%	4	120	64	0.54 A	0.95	1.48	99	1.4	10	-22/-30
	60%	4	277	64	0.25 A	0.95	1.48	94	1.4	17	-22/-30
	100%	3	120	62	0.58 A	1.25	2.02	99	1.4	10	-22/-30
	100%	3	277	62	0.24 A	1.25	2.02	95	1.4	18	-22/-30
	60%	3	120	59	0.49 A	1.24	2.10	99	1.4	10	-22/-30
F17T8	60%	3	277	59	0.23 A	1.24	2.10	93	1.5	18	-22/-30
	100%	3	120	147	1.22 A	1.22	0.83	99	1.4	10	-22/-30
	100%	3	277	144	0.53 A	1.22	0.85	97	1.4	10	-22/-30
	60%	3	120	86	0.72 A	0.66	0.77	99	1.4	10	-22/-30
F40T8	60%	3	277	86	0.33 A	0.66	0.77	96	1.4	14	-22/-30

Safety and performance

UL Type 1 Outdoor UL Type HL ANSI - C82.11 Cons 2002, ANSI - C62.41 - 1991 Product is compliant with material restriction requirements of RoHS

FCC – Part 18 (Class A) for EMI and RFI Non-Consumer Limits cUL Listed UL Type CC NEMA Premium

High Temperature Rated: Suitable for high temperature applications 70C max case temp 5 yr warranty or 90C max case temp 3 yr warranty

See page E-1 for warranty information.

UltraMax® Bi-Level Dimming & Load Shed Dimming Instant Start High-Efficiency
T8 Dimming Ballasts

71731 – GE632MAX-H90-V60

UltraMax® Load Shed Dimming
Instant Start High-Efficiency

6 or 5 – F32T8 120 to 277 "H" 1.18 BF UltraMax® 0-10V 100-60% dim

- Load Shed Variable Dimming 0-10V 100% to 60%
- Anti-Striation Control for better light quality, with no striations.
- Extreme 95% Electrical Efficiency
- UL 55C Ambient Rating - HighTemperature Protection Circuit
- Multi-Voltage Technology handles voltage from 120 to 277V
- UL Type CC Rating provides protection against arcing in electrical devices.
- Cold temperature -20F Minimum Starting Temperature

General characteristics

Ballast Type	Electronic - Dimming
Dimming Type	Continuous
Starting Method	Instant start
Lamp Wiring	Parallel
Line Voltage Regulation (+/-)	10 %
Ambient Temperature (MAX)	55° C (131° F)
Case Temperature (MAX)	70° C (158° F)
Ballast Factor	High (1.18)
Power Factor Correction	Active
Sound Rating	A (20-24 decibels)
Enclosure Type	Metal
Additional Info	Anti-striation control, Universal voltage, Inherent thermal protection

Electrical characteristics

Supply Current Frequency (MIN)	60 Hz

Order information

10 Pack	Pallet Pack	DIY Pack	IP Pack
71731			

Dimensions

Wiring diagram - LFL -6H V60 – see example on Page 12-26	
Case dimensions- Ref Drawing -A – see Page 12-29	
Length (L)	11.75 in (299 mm)
Width (W)	1.7 in (43 mm)
Height (H)	1.18 in (30 mm)
Mounting dimensions	
Mount Length (M)	11.1 in (283 mm)
Mount Slots (MS)	0.3 in (8 mm)
Weight	3.10 lbs
Exit Type	Side
Remote Mounting Distance to Lamp (F32T8)	18 ft
Remote Mounting Wire Gauge	18 AWG
Lead lengths	**Length (± 1 in.)**
Black	25.0 in (635 mm)
Blue	34.0 in (864 mm)
Gray	25.0 in (635 mm)
Red	34.0 in (864 mm)
Violet	25.0 in (635 mm)
White	25.0 in (635 mm)
Yellow	41.0 in (1041 mm)

Specifications by lamp and wattage

Lamp	Light Level	# of Lamps	Line Volts	System Watts	Nom. Line Current	System Ballast Factor	Ballast Efficacy Factor	Power Factor % (>=)	Crest Factor (<=)	THD% (<=)	Min. Starting Temp (°F/°C)
	100%	6	120	221	1.94 A	1.18	0.53	99	1.4	10	-20/-29
	100%	6	277	215	0.82 A	1.18	0.55	97	1.4	10	-20/-29
	60%	6	120	133	1.13 A	0.71	0.53	99	1.4	1	-20/-29
	60%	6	277	132	0.53 A	0.71	0.54	94	1.4	17	-20/-29
	100%	5	120	197	1.73 A	1.25	0.63	99	1.4	10	-20/-29
	100%	5	277	192	0.73 A	1.25	0.65	97	1.4	13	-20/-29
	60%	5	120	123	1.04 A	0.77	0.63	99	1.4	10	-20/-29
F32T8	60%	5	277	122	0.49 A	0.77	0.63	93	1.4	18	-20/-29
	100%	6	120	205	1.80 A	1.18	0.58	99	1.4	10	60/16
	100%	6	277	200	0.76 A	1.18	0.59	97	1.4	10	60/16
	60%	6	120	128	1.09 A	0.71	0.55	99	1.4	10	60/16
	60%	6	277	127	0.51 A	0.71	0.56	94	1.4	17	60/16
	100%	5	120	182	1.60 A	1.23	0.68	99	1.4	10	60/16
	100%	5	277	178	0.68 A	1.23	0.69	96	1.4	16	60/16
	60%	5	120	121	1.03 A	0.82	0.68	99	1.4	10	60/16
F32T8/WM	60%	5	277	120	0.49 A	0.82	0.68	93	1.4	18	60/16
	100%	6	120	187	1.64 A	1.18	0.63	99	1.4	10	60/16
	100%	6	277	184	0.70 A	1.18	0.64	96	1.4	13	60/16
	60%	6	120	123	1.05 A	0.74	0.60	99	1.4	10	60/16
	60%	6	277	122	0.50 A	0.74	0.61	93	1.4	17	60/16
	100%	5	120	166	1.45 A	1.20	0.72	99	1.4	10	60/16
	100%	5	277	164	0.63 A	1.20	0.73	96	1.4	16	60/16
	60%	5	120	119	1.01 A	0.86	0.72	99	1.4	10	-20/-29
F28T8	60%	5	277	118	0.48 A	0.86	0.73	93	1.4	18	60/16
	100%	6	120	178	1.57 A	1.18	0.66	99	1.4	10	60/16
	100%	6	277	176	0.68 A	1.18	0.67	96	1.4	16	60/16
	60%	6	120	122	1.03 A	0.70	0.57	99	1.4	10	60/16
F32T8/25W	60%	6	277	121	0.49 A	0.70	0.58	93	1.4	17	60/16
	100%	5	120	159	1.40 A	1.16	0.73	99	1.4	10	-20/-29
	100%	5	277	157	0.61 A	1.16	0.74	95	1.4	18	-20/-29
	60%	5	120	118	1.01 A	0.87	0.74	99	1.4	10	-20/-29
F25T8	60%	5	277	117	0.48 A	0.87	0.74	93	1.4	20	-20/-29
	100%	6	120	122	1.08 A	1.17	0.96	99	1.4	10	-20/-29
	100%	6	277	121	0.50 A	1.17	0.97	90	1.4	24	-20/-29
	60%	6	120	104	0.88 A	1.03	0.99	99	1.4	10	-20/-29
	60%	6	277	103	0.43 A	1.03	1.00	89	1.4	24	-20/-29
	100%	5	120	107	0.95 A	1.24	1.16	99	1.4	10	-20/-29
	100%	5	277	106	0.44 A	1.24	1.17	88	1.4	26	-20/-29
	60%	5	120	98	0.83 A	1.16	1.18	99	1.4	10	-20/-29
F17T8	60%	5	277	98	0.42 A	1.16	1.18	88	1.4	26	-20/-29
	100%	5	120	231	2.03 A	1.18	0.51	99	1.4	10	0/-18
	100%	5	277	225	0.86 A	1.18	0.52	97	1.4	10	0/-18
	60%	5	120	131	1.12 A	0.64	0.49	99	1.4	10	0/-18
F40T8	60%	5	277	130	0.53 A	0.64	0.49	94	1.4	17	0/-18

Safety and performance

UL Type 1 Outdoor UL Type HL ANSI - C82.11 Cons 2002, ANSI - C62.41 - 1991 Product is compliant with material restriction requirements of RoHS

FCC – Part 18 (Class A) for EMI and RFI Non-Consumer Limits cUL Listed UL Type CC High Temperature Rated: Suitable for high temperature applications

70C max case temp 5 yr warranty or 90C max case temp 3 yr warranty NEMA Premium

See page E-1 for warranty information.

UltraStart® T8 100-3% 0-10V 120–277V Programmed Start Dimming
T8 Dimming Ballasts

75379 – GE132MVPS-N-V03

T8 Dimming/UltraStart® T8 100-3% 0-10V Programmed Start Dimming

1 – F32T8 120V-277V "N" .88 BF UltraStart® 0-10V Dimming 100-3%

- High Efficiency 100-3% 0-10V Programmed Start Dimming
- Multi-Voltage Technology handles voltage from 120 to 277V
- Parallel Lamp Operation - reliable deep dimming performance
- NEMA LL-9 Compliant - GE programmed start life and warranty ratings
- Anti-striation control for use with F32T8/WM or F28T8 Lamps
- UL Type CC rating provides protection against arcing in electrical devices
- UL 55C Ambient Rating – high temperature protection circuit
- Compatible with Class 1 or Class 2 LV 0-10VDC controllers

General characteristics

Ballast Type	Electronic - Dimming
Starting Method	Programmed start
Lamp Wiring	Parallel
Line Voltage Regulation (+/-)	10 %
Ambient Temperature (MAX)	
Case Temperature (MAX)	70° C (158° F)
Ballast Factor	Normal
Power Factor Correction	Active
Sound Rating	A (20-24 decibels)
Enclosure Type	Metal
Additional Info	Anti-striation control, Thermally protected, Universal voltage

Electrical characteristics

Supply Current Frequency	50Hz
Supply Current Frequency (MIN)	50Hz/60 Hz

Order information

10 Pack	Pallet Pack	DIY Pack	IP Pack
75379			

Dimensions

Wiring diagram – LFL PSD1 – see example on page 12-28	
Case dimensions – Ref Drawing -A – see page 12-29	
Length (L)	9.5 in (241 mm)
Width (W)	1.7 in (43 mm)
Height (H)	1.18 in (30 mm)
Mounting dimensions	
Mount Length (M)	8.9 in (226 mm)
Mount Width (X or F)	1.18 in (30 mm)
Mount Slots (MS)	0.3 in (8 mm)
Weight	1.65 lbs
Exit Type	Side
Remote Mounting Distance to Lamp (F32T8)	5 ft
Remote Mounting Wire Gauge	18 AWG
Lead lengths	**Length (± 1 in.)**
Yellow	47.0 in (1194 mm)
White	25.0 in (635 mm)
Red	33.0 in (838 mm)
Blue	33.0 in (838 mm)
Black	25.0 in (635 mm)
Violet	25.0 in (635 mm)
Gray	25.0 in (635 mm)

Specifications by lamp and wattage

Lamp	Light Level	# of Lamps	Line Volts	System Watts	Nom. Line Current	System Ballast Factor	Ballast Efficacy Factor	Power Factor % (>=)	Crest Factor (=)	THD % (=)	Min. Starting Temp (°F/°C)
	100%	1	120	30	0.25 A	0.88		98	1.7	10	
	100%	1	277	29	0.11 A	0.88		98	1.7	10	
	3%	1	120	7	0.06 A	0.01		90	1.7	32	
F32T8	3%	1	277	7	0.03 A	0.01		90	1.7	32	
	100%	1	120	28	0.24 A	0.88		98	1.7	10	
	100%	1	277	28	0.10 A	0.88		98	1.7	10	
	3%	1	120	7	0.05 A	0.01		90	1.7	32	
F32T8/WM	3%	1	277	7	0.03 A	0.01		90	1.7	32	
	100%	1	120	26	0.22 A	0.88		98	1.7	10	
	100%	1	277	26	0.09 A	0.88		98	1.7	10	
	3%	1	120	7	0.05 A	0.01		90	1.7	32	
F28T8	3%	1	277	7	0.03 A	0.01		90	1.7	32	

Safety and performance

UL Type 1 Outdoor UL Type HL FCC – CLASS A Non-Consumer UL Class P ANSI – C62.41 Product is compliant with material restriction requirements of RoHS

cUL Listed UL Listed NEMA Premium

See page E-1 for warranty information.

UltraStart® T8 100-3% 0-10V 120–277V Programmed Start Dimming
T8 Dimming Ballasts

75380 – GE232MVPS-N-V03

T8 Dimming/UltraStart® T8 100-3% 0-10V Programmed Start Dimming

2 – F32T8 120V-277V Normal Light .88 BF UltraStart® 0-10V Dimming 100-3%

- High Efficiency 100-3% 0-10V Programmed Start Dimming
- Multi-Voltage Technology handles voltage from 120 to 277V
- Parallel Lamp Operation - reliable deep dimming performance
- NEMA LL-9 Compliant - GE programmed start life and warranty ratings
- Anti-striation control for use with F32T8/WM or F28T8 Lamps
- UL Type CC rating provides protection against arcing in electrical devices
- UL 55C Ambient Rating – high temperature protection circuit
- Compatible with Class 1 or Class 2 LV 0-10VDC controllers

General characteristics

Ballast Type	Electronic – Dimming
Starting Method	Programmed start
Lamp Wiring	Parallel
Line Voltage Regulation (+/-)	10%
Ambient Temperature (MAX)	104°F (40°C)
Case Temperature (MAX)	70°C (158°F)
Ballast Factor	Normal
Power Factor Correction	Active
Sound Rating	A (20-24 decibels)
Additional Info	Anti-striation control, Thermally protected, Universal voltage

Electrical characteristics

Supply Current Frequency	50 Hz/Supply Current Frequency (MIN)/ 50 Hz/ 60 (MIN)
Supply Current Frequency (MIN)	50 Hz/60 Hz

Order information

10 Pack	Pallet Pack	DIY Pack	IP Pack
75380			

Dimensions

Wiring diagram – LFL PSD2 – see example on page 12-28	
Case dimensions – Ref Drawing -A – see page 12-29	
Length (L)	9.5 in (241 mm)
Width (W)	1.7 in (43 mm)
Height (H)	1.18 in (30 mm)
Mounting dimensions	
Mount Length (M)	8.9 in (226 mm)
Mount Width (X or F)	1.18 in (30 mm)
Mount Slots (MS)	0.3 in (8 mm)
Weight	1.65 lbs
Exit Type	Side
Remote Mounting Distance to Lamp (F32T8)	5 ft
Remote Mounting Wire Gauge	18 AWG
Lead lengths	**Length (± 1 in)**
Black	25 in (635 mm)
Blue and Red	33 in (838 mm)
White	25 in (635 mm)
Yellow	47 in (1194 mm)
Violet	25 in (635 mm)
Gray	25 in (635 mm)

Specifications by lamp and wattage

Lamp	Light Level	# of Lamps	Line Volts	System Watts	Nom. Line Current	System Ballast Factor	Ballast Efficacy Factor	Power Factor % (>=)	Crest Factor (=)	THD % (=)	Min. Starting Temp (°F/°C)
	100%	2	120	58	0.50 A	0.88		98	1.7	10	
	100%	2	277	56	0.21 A	0.88		98	1.7	10	
	3%	2	120	10	0.09 A	0.03		90	1.7	32	
	3%	2	277	11	0.04 A	0.03		90	1.7	32	
	100%	1	120	40	0.33 A	1.1		98	1.7	10	
	100%	1	277	40	0.15 A	1.1		98	1.7	10	
	3%	1	120	8	0.06 A	0.04		80	1.7	32	
F32T8	3%	1	277	8	0.03 A	0.03		80	1.7	32	
	100%	2	120	54	0.45 A	0.88		98	1.7	10	
	100%	2	277	53	0.19 A	0.88		98	1.7	10	
	3%	2	120	10	0.09 A	0.03		90	1.7	32	
	3%	2	277	11	0.04 A	0.03		90	1.7	32	
	100%	1	120	38	0.31 A	1.1		98	1.7	10	
	100%	1	277	37	0.14 A	1.1		90	1.7	10	
	3%	1	120	8	0.06 A	0.04		80	1.7	32	
F32T8/WM	3%	1	277	8	0.03 A	0.04		89	1.7	32	
	100%	2	120	50	0.42 A	0.88		98	1.7	10	
	100%	2	277	49	0.18 A	0.88		98	1.7	10	
	3%	2	120	10	0.09 A	0.03		90	1.7	32	
	3%	2	277	11	0.04 A	0.03		90	1.7	32	
	100%	1	120	36	0.30 A	1.1		98	1.7	10	
	100%	1	277	35	0.13 A	1.1		98	1.7	10	
	3%	1	120	8	0.06 A	0.04		80	1.7	32	
F28T8	3%	1	277	8	0.03 A	0.04		80	1.7	32	

Safety and performance

UL Type 1 Outdoor UL Type HL FCC – CLASS A Non-Consumer UL Class P ANSI – C62.41 Product is compliant with material restriction requirements of RoHS

cUL Listed UL Listed NEMA Premium

UltraStart® T8 100-3% 0-10V 120–277V Programmed Start Dimming
T8 Dimming Ballasts

75381 – GE332MVPS-N-V03

T8 Dimming/UltraStart® T8 100-3% 0-10V Programmed Start Dimming

3 – F32T8 120V-277V Normal Light .88 BF UltraStart® 0-10V Dimming 100-3%

- High Efficiency 100-3% 0-10V Programmed Start Dimming
- Multi-Voltage Technology handles voltage from 120 to 277V
- Parallel Lamp Operation - reliable deep dimming performance
- NEMA LL-9 Compliant - GE programmed start life and warranty ratings
- Anti-striation control for use with F32T8/WM or F28T8 Lamps
- UL Type CC rating provides protection against arcing in electrical devices
- UL 55C Ambient Rating – high temperature protection circuit
- Compatible with Class 1 or Class 2 LV 0-10VDC controllers

General characteristics

Ballast Type	Electronic – Dimming
Starting Method	Programmed start
Lamp Wiring	Parallel
Line Voltage Regulation (+/-)	10%
Ambient Temperature (MAX)	104°F (40°C)
Case Temperature (MAX)	70°C (158°F)
Ballast Factor	Normal
Power Factor Correction	Active
Sound Rating	A (20-24 decibels)
Additional Info	Anti-striation control, TCLP compliant, Thermally protected, Universal voltage

Electrical characteristics

Supply Current Frequency (MIN)	50 Hz/60 Hz

Order information

10 Pack	Pallet Pack	DIY Pack	IP Pack
75381			

Dimensions

Wiring diagram – LFL PSD3 – see example on page 12-28	
Case dimensions – Ref Drawing -A – see page 12-29	
Length (L)	9.5 in (241 mm)
Width (W)	1.7 in (43 mm)
Height (H)	1.18 in (30 mm)
Mounting dimensions	
Mount Length (M)	8.9 in (226 mm)
Mount Width (X or F)	1.18 in (30 mm)
Mount Slots (MS)	0.3 in (8 mm)
Weight	1.65 lbs
Exit Type	Side
Remote Mounting Distance to Lamp (F32T8)	5 ft
Remote Mounting Wire Gauge	18 AWG
Lead lengths	**Length (± 1 in)**
White and Black	25 in (635 mm)
Blue and Red	33 in (838 mm)
Red/White	33 in (838 mm)
Yellow	47 in (1194 mm)
Violet	25 in (635 mm)
Gray	25 in (635 mm)

Specifications by lamp and wattage

Lamp	Light Level	# of Lamps	Line Volts	System Watts	Nom. Line Current	System Ballast Factor	Ballast Efficacy Factor	Power Factor % (>=)	Crest Factor (=)	THD % (=)	Min. Starting Temp (°F/°C)
	100%	3	120	87	0.71 A	0.88		98	1.7	10	
	100%	3	277	85	0.30 A	0.88		98	1.7	10	
	3%	3	120	16	0.15 A	0.03		90	1.7	32	
	3%	3	277	16	0.07 A	0.03		90	1.7	32	
	100%	2	120	69	0.60 A	0.98		98	1.7	10	
	100%	2	277	68	0.25 A	0.98		98	1.7	10	
	3%	2	120	14	0.12 A	0.05		80	1.7	32	
F32T8	3%	2	277	14	0.06 A	0.05		80	1.7	32	
	100%	3	120	78	0.65 A	0.86		98	1.7	10	
	100%	3	277	76	0.28 A	0.86		98	1.7	10	
	3%	3	120	16	0.15 A	0.03		90	1.7	32	
	3%	3	277	16	0.07 A	0.03		90	1.7	32	
	100%	2	120	66	0.55 A	0.96		98	1.7	10	
	100%	2	277	65	0.24 A	0.96		90	1.7	10	
	3%	2	120	14	0.12 A	0.06		80	1.7	32	
F32T8/WM	3%	2	277	14	0.06 A	0.06		89	1.7	32	
	100%	3	120	74	0.60 A	0.85		98	1.7	10	
	100%	3	277	73	0.25 A	0.85		98	1.7	10	
	3%	3	120	16	0.14 A	0.03		90	1.7	32	
	3%	3	277	16	0.07 A	0.03		90	1.7	32	
	100%	2	120	58	0.50 A	0.94		98	1.7	10	
	100%	2	277	58	0.21 A	0.94		98	1.7	10	
	3%	2	120	14	0.12 A	0.07		80	1.7	32	
F28T8	3%	2	277	14	0.06 A	0.06		80	1.7	32	

Safety and performance

Product is compliant with material restriction requirements of RoHS UL Type 1 Outdoor ANSI – C62.41 UL Type HL FCC – CLASS A Non-Consumer UL Class P UL Listed NEMA Premium

See page E-1 for warranty information.

UltraStart® T8 100-3% 0-10V 120–277V Programmed Start Dimming
T8 Dimming Ballasts

75382 – GE432-MVPS-N-V03

T8 Dimming/UltraStart® T8 100-3% 0-10V Programmed Start Dimming

4 F32T8 120V-277V Normal Light .88 BF UltraStart® 0-10V Dimming 100-3%

- High Efficiency 100-3% 0-10V Programmed Start Dimming
- Multi-Voltage Technology handles voltage from 120 to 277V
- Parallel Lamp Operation - reliable deep dimming performance
- NEMA LL-9 Compliant - GE programmed start life and warranty ratings
- Anti-striation control for use with F32T8/WM or F28T8 Lamps
- UL Type CC rating provides protection against arcing in electrical devices
- UL 55C Ambient Rating – high temperature protection circuit
- Compatible with Class 1 or Class 2 LV 0-10VDC controllers

General characteristics

Ballast Type	Electronic – Dimming
Starting Method	Rapid start
Lamp Wiring	Parallel
Line Voltage Regulation (+/-)	10%
Ambient Temperature (MAX)	104°F (40°C)
Case Temperature (MAX)	70°C (158°F)
Ballast Factor	Normal
Power Factor Correction	Active
Sound Rating	A (20-24 decibels)
Additional Info	Anti-striation control, Thermally protected, Universal voltage

Electrical characteristics

Supply Current Frequency (MIN)	50 Hz/ 60 Hz

Order information

10 Pack	Pallet Pack	DIY Pack	IP Pack
75382			

Dimensions

Wiring diagram – LFL PSD4 – see example on page 12-28	
Case dimensions – Ref Drawing -A – see page 12-29	
Length (L)	9.5 in (241 mm)
Width (W)	1.7 in (43 mm)
Height (H)	1.18 in (30 mm)
Mounting dimensions	
Mount Length (M)	8.9 in (226 mm)
Mount Width (X or F)	1.18 in (30 mm)
Mount Slots (MS)	0.3 in (8 mm)
Weight	1.65 lbs
Exit Type	Side
Remote Mounting Distance to Lamp (F32T8)	5 ft
Remote Mounting Wire Gauge	18 AWG
Lead lengths	**Length (± 1 in)**
White and Black	25 in (635 mm)
Blue and Red	33 in (838 mm)
Blue/White	33 in (838 mm)
Red/White	33 in (838 mm)
Yellow	47 in (1194 mm)
Violet	25 in (635 mm)
Gray	25 in (635 mm)

Specifications by lamp and wattage

Lamp	Light Level	# of Lamps	Line Volts	System Watts	Nom. Line Current	System Ballast Factor	Ballast Efficacy Factor	Power Factor % (>=)	Crest Factor (=)	THD % (=)	Min. Starting Temp (°F/°C)
	100%	4	120	114	0.96 A	0.88		99	1.7	10	
	100%	4	277	111	0.41 A	0.88		98	1.7	10	
	3%	4	120	22	0.18 A	0.03		99	1.7	15	
	3%	4	277	22	0.09 A	0.03		90	1.7	30	
	100%	3	120	94	0.79 A	0.90		99	1.7	10	
	100%	3	277	92	0.34 A	0.90		99	1.7	10	
	3%	3	120	19	0.16 A	0.03		98	1.7	15	
F32T8	3%	3	277	18	0.08 A	0.03		90	1.7	30	
	100%	4	120	106	0.90 A	0.86		99	1.7	10	
	100%	4	277	104	0.38 A	0.86		98	1.7	10	
	3%	4	120	22	0.18 A	0.03		99	1.7	15	
	3%	4	277	22	0.09 A	0.03		90	1.7	30	
	100%	3	120	87	0.73 A	0.90		99	1.7	10	
	100%	3	277	85	0.32 A	0.90		99	1.7	10	
	3%	3	120	19	0.16 A	0.03		98	1.7	15	
F32T8/WM	3%	3	277	19	0.08 A	0.03		90	1.7	30	
	100%	4	120	98	0.82 A	0.85		99	1.7	10	
	100%	4	277	95	0.36 A	0.85		98	1.7	10	
	3%	4	120	22	0.18 A	0.03		99	1.7	15	
	3%	4	277	22	0.09 A	0.03		90	1.7	30	
	100%	3	120	79	0.70 A	0.90		99	1.7	10	
	100%	3	277	78	0.30 A	0.90		99	1.7	10	
	3%	3	120	19	0.16 A	0.03		98	1.7	15	
F28T8	3%	3	277	19	0.08 A	0.03		90	1.7	30	

Safety and performance

Product is compliant with material restriction requirements of RoHS UL Type 1 Outdoor ANSI – C62.41 UL Type HL FCC – CLASS A Non-Consumer UL Class P UL Listed NEMA Premium

See page E-1 for warranty information.

UltraStart® T8 100-3% 0-10V 120–277V Programmed Start Dimming
T8 Dimming Ballasts

75383 – GE232-MVPS-H-V03

T8 Dimming/UltraStart® T8 100-3% 0-10V Programmed Start Dimming

2 or 1 – F32T8 120V-277V High Light 1.18 BF UltraStart® 0-10V Dimming 100-3%

- High Efficiency 100-3% 0-10V Programmed Start Dimming
- Multi-Voltage Technology handles voltage from 120 to 277V
- Parallel Lamp Operation - reliable deep dimming performance
- NEMA LL-9 Compliant - GE programmed start life and warranty ratings
- Anti-striation control for use with F32T8/WM or F28T8 Lamps
- UL Type CC rating provides protection against arcing in electrical devices
- UL 55C Ambient Rating – high temperature protection circuit
- Compatible with Class 1 or Class 2 LV 0-10VDC controllers

General characteristics

Ballast Type	Electronic – Dimming
Starting Method	Programmed start
Lamp Wiring	Parallel
Line Voltage Regulation (+/-)	10%
Ambient Temperature (MAX)	105°F (41°C)
Case Temperature (MAX)	70°C (158°F)
Ballast Factor	High
Power Factor Correction	Active
Sound Rating	A (20-24 decibels)
Additional Info	Auto-restart, Thermally protected

Electrical characteristics

Supply Current Frequency	50 Hz/60 Hz

Order information

10 Pack	Pallet Pack	DIY Pack	IP Pack
75383			

Dimensions

Wiring diagram – LFL PSD2 – see example on page 12-28	
Case dimensions – Ref Drawing -A – see page 12-29	
Length (L)	9.5 in (241 mm)
Width (W)	1.7 in (43 mm)
Height (H)	1.18 in (30 mm)
Mounting dimensions	
Mount Length (M)	8.9 in (226 mm)
Mount Width (X or F)	1.18 in (30 mm)
Mount Slots (MS)	0.3 in (8 mm)
Weight	1.65 lbs
Exit Type	Side
Remote Mounting Distance to Lamp (F32T8)	5 ft
Remote Mounting Wire Gauge	18 AWG
Lead lengths	**Length (± 1 in)**
Blue and Red	33 in (838 mm)
Black	25 in (635 mm)
White	25 in (635 mm)
Yellow	47 in (1194 mm)
Blue	33 in (838 mm)
Violet	25 in (635 mm)
Gray	25 in (635 mm)

Specifications by lamp and wattage

Lamp	Light Level	# of Lamps	Line Volts	System Watts	Nom. Line Current	System Ballast Factor	Ballast Efficacy Factor	Power Factor % (>=)	Crest Factor (=)	THD % (=)	Min. Starting Temp (°F/°C)
	100%	2	120	76	0.64 A	1.18		98	1.7	10	
	100%	2	277	74	0.27 A	1.18		98	1.7	10	
	3%	2	120	14	0.12 A	0.03		90	1.7	32	
	3%	2	277	12	0.05 A	0.03		90	1.7	32	
	100%	1	120	46	0.40 A	1.34		98	1.7	10	
	100%	1	277	46	0.17 A	1.33		98	1.7	10	
	3%	1	120	8	0.07 A	0.07		80	1.7	32	
F32T8	3%	1	277	8	0.04 A	0.07		80	1.7	32	
	100%	2	120	72	0.60 A	1.16		98	1.7	10	
	100%	2	277	70	0.25 A	1.16		98	1.7	10	
	3%	2	120	14	0.12 A	0.03		90	1.7	32	
	3%	2	277	12	0.05 A	0.03		90	1.7	32	
	100%	1	120	44	0.36 A	1.33		98	1.7	10	
	100%	1	277	44	0.16 A	1.33		90	1.7	10	
	3%	1	120	8	0.07 A	0.08		80	1.7	32	
F32T8/WM	3%	1	277	8	0.04 A	0.08		89	1.7	32	
	100%	2	120	66	0.55 A	1.15		98	1.7	10	
	100%	2	277	65	0.24 A	1.15		98	1.7	10	
	3%	2	120	14	0.12 A	0.03		90	1.7	32	
	3%	2	277	12	0.05 A	0.03		90	1.7	32	
	100%	1	120	41	0.34 A	1.33		98	1.7	10	
	100%	1	277	41	0.15 A	1.33		98	1.7	10	
	3%	1	120	8	0.07 A	0.08		80	1.7	32	
F28T8	3%	1	277	8	0.04 A	0.08		80	1.7	32	

Safety and performance

UL Type 1 Outdoor UL Type HL Product is compliant with material restriction requirements of RoHS FCC – CLASS A Non-Consumer ANSI – C62.41 UL Class P

cUL Listed UL Listed High Temperature Rated: Suitable for high temperature applications 70°C max case temp 5 yr warranty or 90°C max case temp 3 yr warranty. NEMA Premium

See page E-1 for warranty information.

UltraStart® T8 100-3% 0-10V 120–277V Programmed Start Dimming
T8 Dimming Ballasts

75384 – GE332MVPS-H-V03

T8 Dimming/UltraStart® T8 100-3% 0-10V Programmed Start Dimming

3 – F32T8 120V-277V High Light 1.18 BF UltraStart® 0-10V Dimming 100-3%

- High Efficiency 100-3% 0-10V Programmed Start Dimming
- Multi-Voltage Technology handles voltage from 120 to 277V
- Parallel Lamp Operation - reliable deep dimming performance
- NEMA LL-9 Compliant - GE programmed start life and warranty ratings
- Anti-striation control for use with F32T8/WM or F28T8 Lamps
- UL Type CC rating provides protection against arcing in electrical devices
- UL 55C Ambient Rating – high temperature protection circuit
- Compatible with Class 1 or Class 2 LV 0-10VDC controllers

General characteristics

Ballast Type	Electronic – Dimming
Starting Method	Programmed start
Lamp Wiring	Parallel
Line Voltage Regulation (+/-)	10%
Ambient Temperature (MAX)	105°F (41°C)
Case Temperature (MAX)	70°C (158°F)
Ballast Factor	High
Power Factor Correction	Active
Sound Rating	A (20-24 decibels)
Additional Info	Auto-restart, Thermally protected

Electrical characteristics

Supply Current Frequency	50 Hz/60 Hz

Order information

10 Pack	Pallet Pack	DIY Pack	IP Pack
75384			

Dimensions

Wiring diagram – LFL PSD3 – see example on page 12-28	
Case dimensions – Ref Drawing -A – see page 12-29	
Length (L)	9.5 in (241 mm)
Width (W)	1.7 in (43 mm)
Height (H)	1.18 in (30 mm)
Mounting dimensions	
Mount Length (M)	8.9 in (226 mm)
Mount Width (X or F)	1.18 in (30 mm)
Mount Slots (MS)	0.3 in (8 mm)
Weight	1.65 lbs
Exit Type	Side
Remote Mounting Distance to Lamp (F32T8)	5 ft
Remote Mounting Wire Gauge	18 AWG
Lead lengths	**Length (± 1 in)**
White and Black	25 in (635 mm)
Blue and Red	33 in (838 mm)
Red/White	33 in (838 mm)
Yellow	47 in (1194 mm)
Violet	25 in (635 mm)
Gray	25 in (635 mm)

Specifications by lamp and wattage

Lamp	Light Level	# of Lamps	Line Volts	System Watts	Nom. Line Current	System Ballast Factor	Ballast Efficacy Factor	Power Factor % (>=)	Crest Factor (=)	THD % (=)	Min. Starting Temp (°F/°C)
	100%	3	120	116	0.97 A	1.18		98	1.7	10	
	100%	3	277	113	0.41 A	1.18		98	1.7	10	
	3%	3	120	17	0.14 A	0.03		90	1.7	32	
	3%	3	277	17	0.07 A	0.03		90	1.7	32	
	100%	2	120	87	0.73 A	1.26		98	1.7	10	
	100%	2	277	86	0.31 A	1.26		98	1.7	10	
	3%	2	120	14	0.12 A	0.05		80	1.7	32	
F32T8	3%	2	277	14	0.06 A	0.05		80	1.7	32	
	100%	3	120	103	0.86 A	1.16		98	1.7	10	
	100%	3	277	104	0.38 A	1.16		98	1.7	10	
	3%	3	120	17	0.14 A	0.03		90	1.7	32	
	3%	3	277	17	0.07 A	0.03		90	1.7	32	
	100%	2	120	81	0.67 A	1.26		98	1.7	10	
	100%	2	277	80	0.30 A	1.26		90	1.7	10	
	3%	2	120	14	0.12 A	0.05		80	1.7	32	
F32T8/WM	3%	2	277	14	0.06 A	0.05		89	1.7	32	
	100%	3	120	88	0.73 A	1.15		98	1.7	10	
	100%	3	277	96	0.35 A	1.15		98	1.7	10	
	3%	3	120	17	0.14 A	0.03		90	1.7	32	
	3%	3	277	17	0.07 A	0.03		90	1.7	32	
	100%	2	120	73	0.62 A	1.25		98	1.7	10	
	100%	2	277	71	0.26 A	1.25		98	1.7	10	
	3%	2	120	14	0.12 A	0.06		80	1.7	32	
F28T8	3%	2	277	14	0.06 A	0.06		80	1.7	32	

Safety and performance

UL Type 1 Outdoor UL Type HL Product is compliant with material restriction requirements of RoHS FCC – CLASS A Non-Consumer ANSI – C62.41 UL Class P cUL Listed UL Listed High Temperature Rated: Suitable for high temperature applications 70°C max case temp 5 yr warranty or 90°C max case temp 3 yr warranty. NEMA Premium

See page E-1 for warranty information.

UltraStart® T8 100-3% 0-10V 120–277V Programmed Start Dimming
T8 Dimming Ballasts

75385 – GE432-MVPS-H-V03

T8 Dimming/UltraStart® T8 100-3% 0-10V Programmed Start Dimming

4 – F32T8 120V-277V High Light 1.18 BF UltraStart® 0-10V Dimming 100-3%

- High Efficiency 100-3% 0-10V Programmed Start Dimming
- Multi-Voltage Technology handles voltage from 120 to 277V
- Parallel Lamp Operation - reliable deep dimming performance
- NEMA LL-9 Compliant - GE programmed start life and warranty ratings
- Anti-striation control for use with F32T8/WM or F28T8 Lamps
- UL Type CC rating provides protection against arcing in electrical devices
- UL 55C Ambient Rating – high temperature protection circuit
- Compatible with Class 1 or Class 2 LV 0-10VDC controllers

General characteristics

Ballast Type	Electronic – Dimming
Starting Method	Programmed start
Lamp Wiring	Parallel
Line Voltage Regulation (+/-)	10%
Ambient Temperature (MAX)	105°F (41°C)
Case Temperature (MAX)	70°C (158°F)
Ballast Factor	High
Power Factor Correction	Active
Sound Rating	A (20-24 decibels)
Additional Info	Auto-restart, Thermally protected

Electrical characteristics

Supply Current Frequency	50 Hz/60 Hz

Order information

10 Pack	Pallet Pack	DIY Pack	IP Pack
75385			

Specifications by lamp and wattage

Lamp	# of Lamps	Line Volts
F32T8	4	120
	4	277
	3	120
	3	277
F32T8/WM	4	120
	4	277
	3	120
	3	277
F28T8	4	120
	4	277
	3	120
	3	277
F25T8	4	120
	4	277
	3	120
	3	277
F17T8	4	120
	4	277
	3	120
	3	277

Dimensions

Wiring diagram – LFL PSD4 see example on page 12-28	
Case dimensions – Ref Drawing -A – see page 12-29	
Length (L)	11.75 in (299 mm)
Width (W)	1.7 in (43 mm)
Height (H)	1.18 in (30 mm)
Mounting dimensions	
Mount Length (M)	11.1 in (283 mm)
Mount Width (X or F)	1.6 in (40 mm)
Mount Slots (MS)	0.3 in (8 mm)
Weight	2.4 lbs
Exit Type	Side
Remote Mounting Distance to Lamp (F32T8)	5 ft
Remote Mounting Wire Gauge	18 AWG
Lead lengths	**Length (± 1 in)**
White and Black	25 in (635 mm)
Blue and Red	33 in (838 mm)
Blue/White	33 in (838 mm)
Red/White	33 in (838 mm)
Yellow	47 in (1194 mm)
Violet	25 in (635 mm)
Gray	25 in (635 mm)

Safety and performance

Product is compliant with material restriction requirements of RoHS ANSI – C62.41 UL Type 1 Outdoor UL Type HL FCC – CLASS A Non-Consumer UL Class P cUL Listed UL Listed High Temperature Rated: Suitable for high temperature applications 70°C max case temp 5 yr warranty or 90°C max case temp 3 yr warranty. NEMA Premium

See page E-1 for warranty information.

UltraStart® T8 100-3% 0-10V 120–277V Programmed Start Dimming
T8 Dimming Ballasts

62044 – GE432MVPS-N-V03W

T8 Dimming/UltraStart® T8 100-3% 0-10V Programmed Start Dimming

3 – F32T8 120V-277V Normal Light .88 BF UltraStart® 0-10V Dimming 100-3%

- High Efficiency 100-3% 0-10V Programmed Start Dimming
- Multi-Voltage Technology handles voltage from 120 to 277V
- Parallel Lamp Operation - reliable deep dimming performance
- NEMA LL-9 Compliant - GE programmed start life and warranty ratings
- Anti-striation control for use with F32T8/WM or F28T8 Lamps
- UL Type CC rating provides protection against arcing in electrical devices
- UL 55C Ambient Rating – high temperature protection circuit
- Compatible with Class 1 or Class 2 LV 0-10VDC controllers

General characteristics

Ballast Type	Electronic – Dimming
Starting Method	Rapid start
Lamp Wiring	Parallel
Line Voltage Regulation (+/-)	10%
Ambient Temperature (MAX)	104°F (40°C)
Case Temperature (MAX)	70°C (158°F)
Ballast Factor	Normal
Power Factor Correction	Active
Sound Rating	A (20-24 decibels)
Additional Info	Anti-striation control, No PCBs, Thermally protected, Universal voltage

Electrical characteristics

Supply Current Frequency (MIN)	50 Hz/60 Hz

Order information

10 Pack	Pallet Pack	DIY Pack	IP Pack
62044			

Dimensions

Wiring diagram – LFL PSD3 – see example on page 12-28	
Case dimensions – Ref Drawing -A – see page 12-29	
Length (L)	9.5 in (241 mm)
Width (W)	1.7 in (43 mm)
Height (H)	1.18 in (30 mm)
Mounting dimensions	
Mount Length (M)	8.9 in (226 mm)
Mount Width (X or F)	1.18 in (30 mm)
Mount Slots (MS)	0.3 in (8 mm)
Weight	1.65 lbs
Exit Type	Side
Remote Mounting Distance to Lamp (F32T8)	5 ft
Remote Mounting Wire Gauge	18 AWG
Lead lengths	**Length (± 1 in)**
White and Black	25 in (635 mm)
Blue and Red	19 in (483 mm)
Red/White	19 in (483 mm)
Yellow	100 in (2540 mm)
Violet	25 in (635 mm)
Gray	25 in (635 mm)

Specifications by lamp and wattage

Lamp	Light Level	# of Lamps	Line Volts	System Watts	Nom. Line Current	System Ballast Factor	Ballast Efficacy Factor	Power Factor % (>=)	Crest Factor (=)	THD % (=)	Min. Starting Temp (°F/°C)
	100%	4	120	87	0.71 A	0.88		98	1.7	10	
	100%	4	277	85	0.30 A	0.88		98	1.7	10	
	3%	3	120	16	0.15 A	0.03		90	1.7	32	
	3%	3	277	16	0.07 A	0.03		90	1.7	32	
	100%	2	120	69	0.60 A	0.98		98	1.7	10	
	100%	2	277	68	0.25 A	0.98		98	1.7	10	
	3%	2	120	14	0.12 A	0.05		80	1.7	32	
F32T8	3%	2	277	14	0.06 A	0.05		80	1.7	32	
	100%	3	120	78	0.65 A	0.86		98	1.7	10	
	100%	3	277	76	0.28 A	0.86		98	1.7	10	
	3%	3	120	16	0.15 A	0.03		90	1.7	32	
	3%	3	277	16	0.07 A	0.03		90	1.7	32	
	100%	2	120	66	0.55 A	0.96		98	1.7	10	
	100%	2	277	65	0.24 A	0.96		90	1.7	10	
	3%	2	120	14	0.12 A	0.06		80	1.7	32	
F32T8/WM	3%	2	277	14	0.06 A	0.06		89	1.7	32	
	100%	3	120	74	0.60 A	0.85		98	1.7	10	
	100%	3	277	73	0.25 A	0.85		98	1.7	10	
	3%	3	120	16	0.14 A	0.03		90	1.7	32	
	3%	3	277	16	0.07 A	0.03		90	1.7	32	
	100%	2	120	58	0.50 A	0.94		98	1.7	10	
	100%	2	277	58	0.21 A	0.94		98	1.7	10	
	3%	2	120	14	0.12 A	0.07		80	1.7	32	
F28T8	3%	2	277	14	0.06 A	0.06		80	1.7	32	

Safety and performance

Product is compliant with material restriction requirements of RoHS UL Type 1 Outdoor ANSI – C62.41 UL Type HL FCC – CLASS A Non-Consumer UL Class P UL Listed NEMA Premium

UltraStart® T5 120–277V Step Dimming Program Start Ballast
T5 Dimming Ballasts

90903 – GE228MVPS-N-S35

T5 Dimming/UltraStart® T5 120-277V
Step Dimming Program Start
2 or 1 F28T5HE lamps

- Line Voltage: Multi-Voltage 120 to 277 VAC, +/-10%, 50/60Hz
- Bi-Level Switching 100 to 35%
- Anti-Striation Control for better light quality, with no striations
- UL 55C Ambient Rating – High Temperature Protection Circuit

General characteristics

Ballast Type	Electronic – Dimming
Starting Method	Program start
Lamp Wiring	Series
Line Voltage Regulation (+/-)	10%
Ambient Temperature (MAX)	55°C (131°F)
Case Temperature (MAX)	70°C (158°F)
Ballast Factor	Normal
Power Factor Correction	Active
Sound Rating	A (20-24 decibels)
Additional Info	Anti-striation control, No PCBs, Thermally protected, Universal voltage

Electrical characteristics

Supply Current Frequency (MIN)	50 Hz/ 60 Hz

Order information

10 Pack	Pallet Pack	DIY Pack	IP Pack
90903			

Dimensions

Wiring diagram – LFL-2N/L S30 – see example on page 12-27	
Case dimensions – Ref Drawing -A – see page 12-29	
Length (L)	9.5 in (241 mm)
Width (W)	1.7 in (43 mm)
Height (H)	1.2 in (30.5 mm)
Mounting dimensions	
Mount Length (M)	9.0 in (229 mm)
Mount Width (X or F)	1.0 in (27 mm)
Mount Slots (MS)	0.3 in (8 mm)
Weight	1.73 lbs
Exit Type	Side
Remote Mounting Distance to Lamp (F24T5H0)	8 ft
Remote Mounting Wire Gauge	18 AWG
Lead lengths	**Length (± 1 in)**
White	20 in (508 mm)
Black	20 in (508 mm)
Red	26 in (660 mm)
Blue	26 in (660 mm)
Yellow	37 in (940 mm)

Specifications by lamp and wattage

Lamp	Light Level	# of Lamps	Line Volts	System Watts	Nom. Line Current	System Ballast Factor	Ballast Efficacy Factor	Power Factor % (>=)	Crest Factor (=)	THD % (=)	Min. Starting Temp (°F/°C)
		2	120	60	0.53 A	0.95	1.58	99	1.7	10	32/0
		2	277	58	0.22 A	0.95	1.64	97	1.7	10	32/0
		2	120	30	0.25 A	0.35	1.17	99	1.7	10	32/0
		2	277	30	0.11 A	0.35	1.17	93	1.7	20	32/0
		1	120	30	0.26 A	0.95	3.17	99	1.7	10	32/0
		1	277	29	0.12 A	0.95	3.28	92	1.7	20	32/0
		1	120	14	0.12 A	0.35	2.50	99	1.7	20	32/0
F28T5WM		1	277	15	0.06 A	0.35	2.33	82	1.7	25	32/0
		2	120	63	0.55 A	0.95	1.50	99	1.7	10	32/0
		2	277	62	0.24 A	0.95	1.53	97	1.7	10	32/0
		2	120	31	0.26 A	0.35	1.13	99	1.7	10	32/0
		2	277	32	0.12 A	0.35	1.09	94	1.7	20	32/0
		1	120	31	0.27 A	0.95	3.06	99	1.7	10	32/0
		1	277	31	0.12 A	0.95	3.06	92	1.7	20	32/0
		1	120	15	0.12 A	0.35	2.33	99	1.7	20	32/0
F28T5HL		1	277	15	0.07 A	0.35	2.33	83	1.7	25	32/0
		2	120	64	0.55 A	0.95	1.48	99	1.7	10	32/0
		2	277	62	0.24 A	0.95	1.53	97	1.7	10	32/0
		2	120	34	0.28 A	0.35	1.03	99	1.7	10	32/0
		2	277	33	0.13 A	0.35	1.06	94	1.7	20	32/0
		1	120	31	0.27 A	0.95	3.06	99	1.7	10	32/0
		1	277	31	0.12 A	0.95	3.06	92	1.7	20	32/0
		1	120	15	0.13 A	0.35	2.33	98	1.7	20	32/0
F28T5HE		1	277	16	0.07 A	0.35	2.19	83	1.7	25	32/0
		2	120	48	0.42 A	0.95	1.98	99	1.7	10	32/0
		2	277	47	0.18 A	0.95	2.02	96	1.7	10	32/0
		2	120	23	0.22 A	0.35	1.52	99	1.7	20	32/0
		2	277	24	0.10 A	0.35	1.46	91	1.7	10	32/0
		1	120	24	0.21 A	0.95	3.96	99	1.7	10	32/0
		1	277	24	0.10 A	0.95	3.96	89	1.7	20	32/0
		1	120	12	0.10 A	0.35	2.92	98	1.7	20	32/0
F21T5HE		1	277	12	0.06 A	0.35	2.92	77	1.7	30	32/0

Safety and performance

Product is compliant with material restriction requirements of RoHS UL Type 1 Outdoor UL Type HL ANSI – C62.41 FCC – CLASS A Non-Consumer
UL Class P UL Listed UL Class CC ANSI - C82.11 Cons 2002 No PCB's

See page E-1 for warranty information.

UltraStart® T5 120-277V Step Dimming Program Start Ballast
T5 Dimming Ballasts

90904 – GE224MVPS-N-S35

T5 Dimming/UltraStart® T5 120-277V
Step Dimming Program Start
2 or 1 F24T5HO lamps

- Line Voltage: Multi-Voltage 120 to 277 VAC, +/-10%, 50/60Hz
- Series Lamp Operation
- Bi-Level Switching 100 to 35%
- Programmed Rapid Start
- Active Power Factor Correction

General characteristics

Ballast Type	Electronic – Dimming
Starting Method	Program start
Lamp Wiring	Parallel
Line Voltage Regulation (+/-)	10%
Ambient Temperature (MAX)	131°F (55°C)
Case Temperature (MAX)	70°C (158°F)
Ballast Factor	Normal
Power Factor Correction	Active
Sound Rating	A (20-24 decibels)
Additional Info	Anti-striation control, No PCBs, Thermally protected, Universal voltage

Electrical characteristics

Supply Current Frequency (MIN)	50 Hz/ 60 Hz

Order information

10 Pack	Pallet Pack	DIY Pack	IP Pack
90904			

Dimensions

Wiring diagram – LFL-2N/L S30 – see example on page 12-27	
Case dimensions – Ref Drawing -A – see page 12-29	
Length (L)	9.5 in (241 mm)
Width (W)	1.7 in (43 mm)
Height (H)	1.2 in (30.5 mm)
Mounting dimensions	
Mount Length (M)	8.9 in (226 mm)
Mount Width (X or F)	1.18 in (30 mm)
Mount Slots (MS)	0.3 in (8 mm)
Weight	1.45 lbs
Exit Type	Side
Remote Mounting Distance to Lamp (F24T5H0)	8 ft
Remote Mounting Wire Gauge	18 AWG
Lead lengths	**Length (± 1 in)**
White	18 in (457 mm)
Black	18 in (457 mm)
Red	18 in (457 mm)
Blue	18 in (457 mm)
Yellow	26 in (660 mm)

Specifications by lamp and wattage

Lamp	Light Level	# of Lamps	System Watts		Nom. Line Current		System Ballast Factor	Ballast Efficacy Factor		Power Factor % (<=)		Crest Factor (<=)	THD% (<=)		Min Starting Temp (°F/°C)
			120V	277V	120V	277V		120V	277V	120V	277V		120V	277V	
F24T5/HO	100%	2	51	50	0.44 A	0.19 A	1.00	1.97	2.02	99	97	1.7	10	10	0/-18
	35%	2	23	23	0.19 A	0.09 A	0.35	1.54	1.52	99	90	1.7	10	20	0/-18
	100%	1	27	27	0.24 A	0.11 A	1.00	3.73	3.73	99	91	1.7	10	20	32/0
	35%	1	12	12	0.10 A	0.06 A	0.35	2.97	2.82	98	78	1.7	20	30	32/0
FT24W/2G11	100%	2	51	50	0.44 A	0.19 A	1.00	1.96	2.00	99	97	1.7	10	10	32/0
	35%	2	24	24	0.20 A	0.10 A	0.35	1.44	1.43	99	91	1.7	10	20	32/0
	100%	1	27	27	0.24 A	0.11 A	1.00	3.71	3.72	99	91	1.7	10	20	32/0
	35%	1	13	13	0.11 A	0.06 A	0.35	2.77	2.65	98	80	1.7	20	30	32/0
FT36W/2G11	100%	1	35	35	0.31 A	0.14 A	1.00	2.85	2.88	99	94	1.7	10	20	32/0
	35%	1	16	16	0.13 A	0.07 A	0.35	2.24	2.18	99	84	1.7	20	25	32/0
F39T5/HO	100%	1	40	39	0.35 A	0.15 A	1.00	2.49	2.54	99	95	1.7	10	20	32/0
	35%	1	17	17	0.14 A	0.07 A	0.35	2.08	2.05	99	85	1.7	10	25	32/0

Safety and performance

Product is compliant with material restriction requirements of RoHS UL Type 1 Outdoor UL Type HL ANSI – C62.41 FCC – CLASS A Non-Consumer
UL Class P UL Listed UL Class CC ANSI - C82.11 Cons 2002

For N-1 operation individually insulate each unused blue lamp lead for 600 Vrms.
Install and Ground Per National Electric Code

See page E-1 for warranty information.

LFL -6H S60

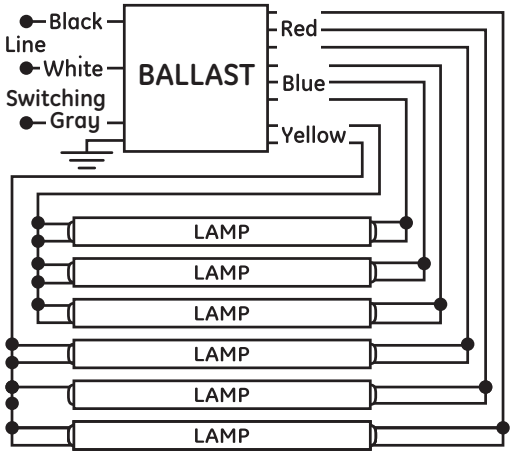

LFL -6H V60

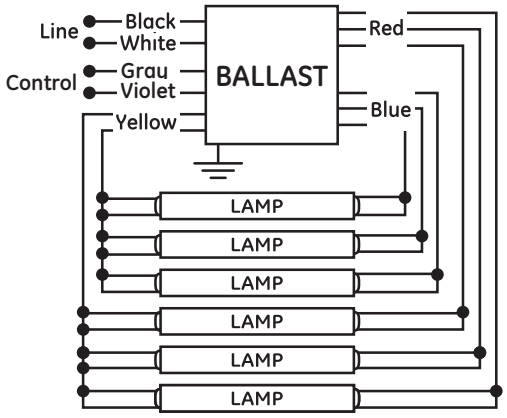

LFL -4H S60

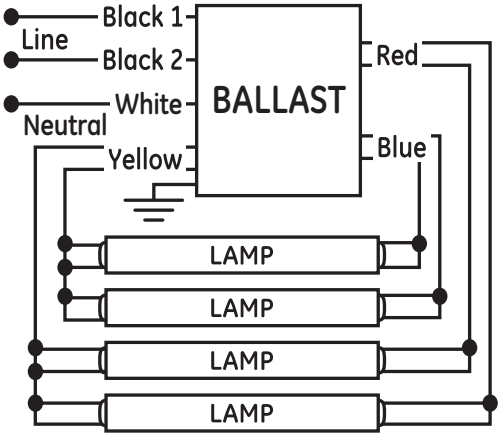

LFL -4H V60

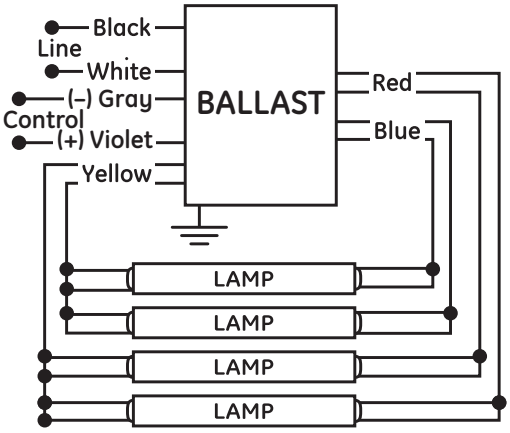

See page E-1 for warranty information.

Wiring Diagrams
T8 Dimming Ballasts

LFL -3H S60

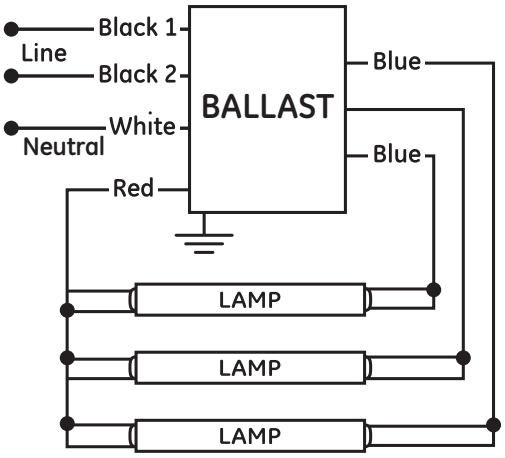

LFL -3H V60

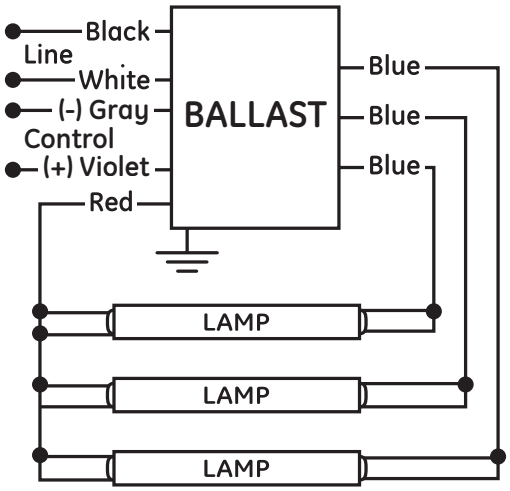

LFL -2H S60

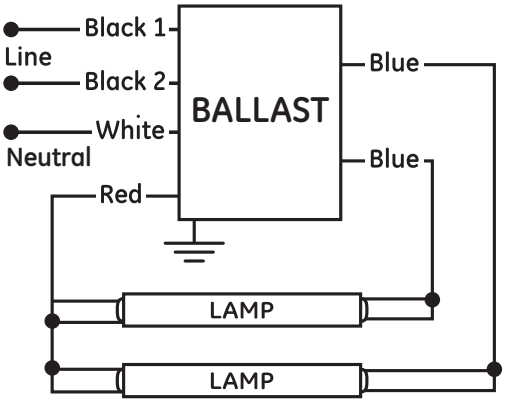

LFL -2H V60

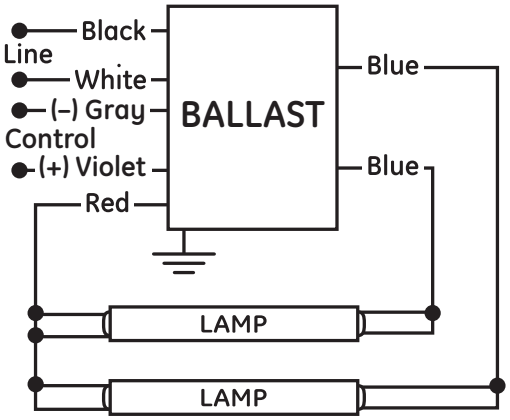

LFL - 1N S30

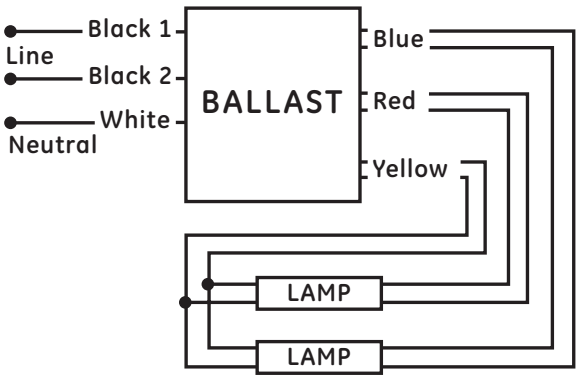

LFL - 2N/L S30

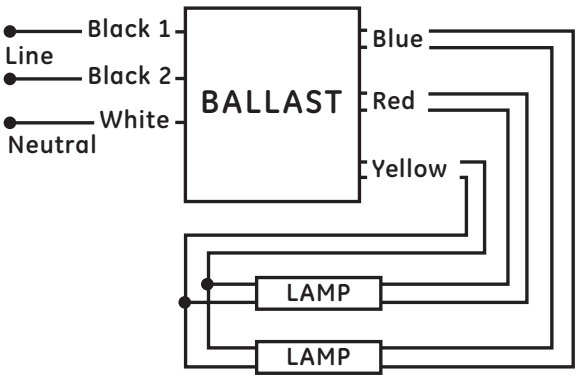

See page E-1 for warranty information.

Wiring Diagrams
T8 Dimming Ballasts

LFL PSD1

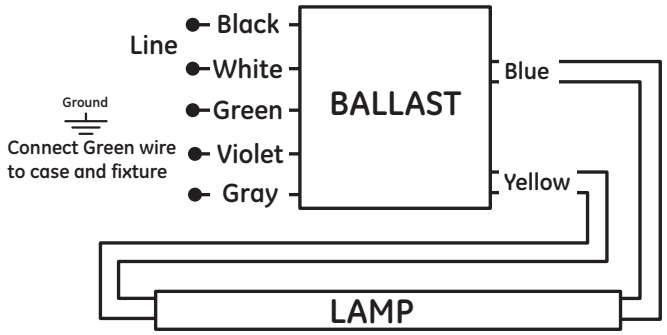

LFL PSD2

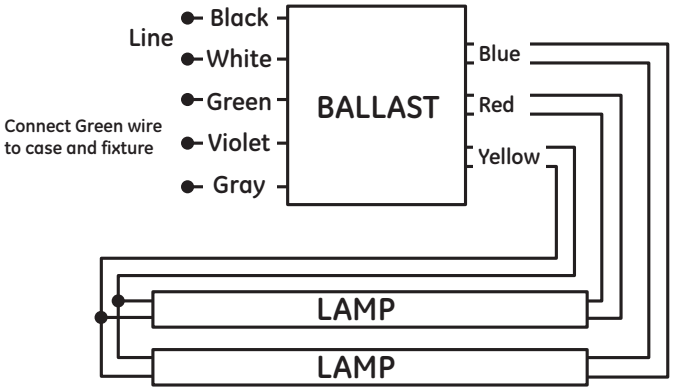

LFL PSD3

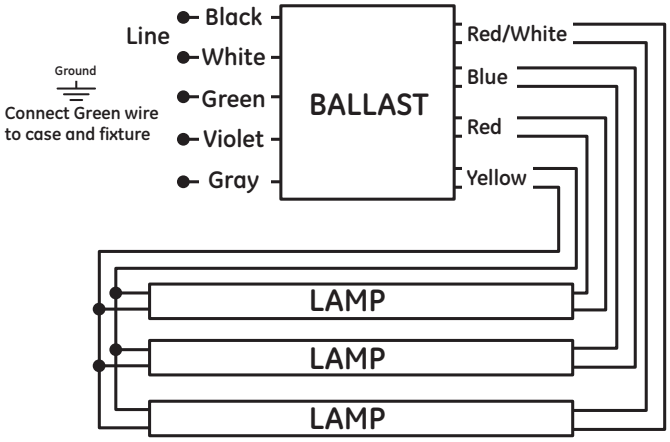

LFL PSD4

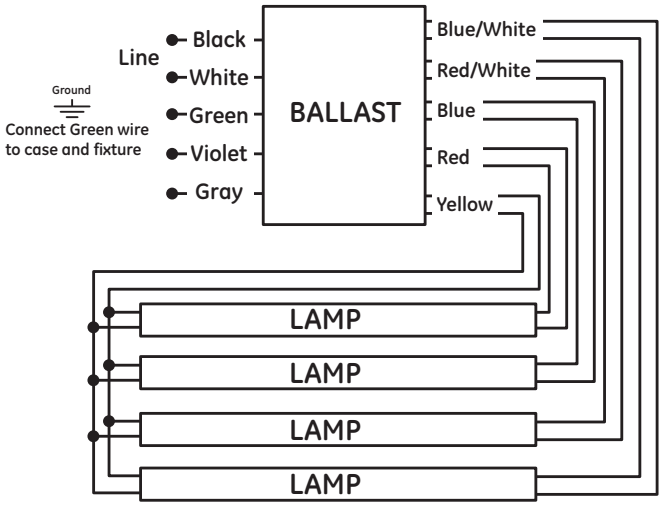

LFL PSD5

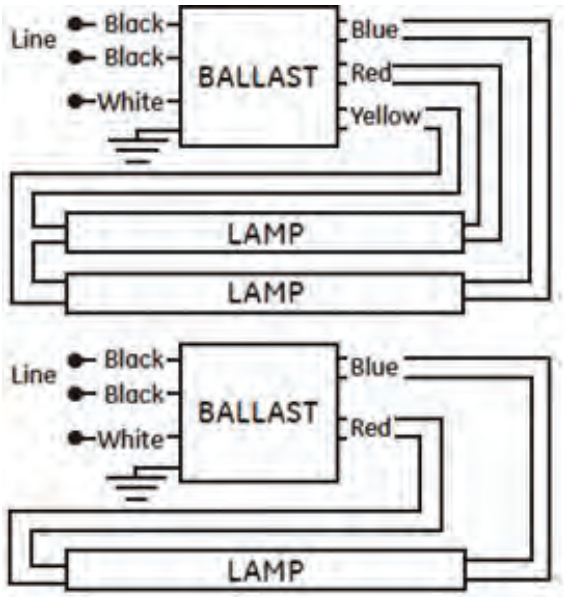

See page E-1 for warranty information.

Case Dimensions
T8 Dimming Ballasts

-A

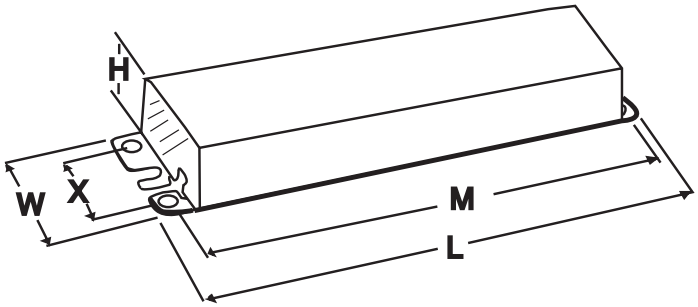

See page E-1 for warranty information.

Notes

See page E-1 for warranty information.

Table of Contents
T5 Electronic Programmed Start Ballasts

*T5 lamp lengths are noted to nearest foot and are not exact lengths as noted in feet. See GE Lamp Catalog for exact lamp length.

Understanding T5 Electronic Programmed Start Ballasts

UltraStart® T5 programmed start ballasts for T5 fluorescent lamps.

GE has developed a line of T5 ballasts that incorporate the benefits of programmed start ballasts with the energy savings, fast starting and parallel lamp operation of instant start ballasts. GE's UltraStart® T5 ballasts use low energy loss, high efficiency components along with continuous cathode cutout (CCC) technology—resulting in 8 fewer watts than standard 4-lamp 54 watt T5 ballasts. GE's UltraStart® T5 ballasts offer a 44% improvement over standard T5 ballasts and a new industry threshold for high efficiency ballasts.

The GE UltraStart® Watt-Miser® T5 Lamp and Ballast System Advantage

- 18 watts lower than standard 4-lamp, 54 watt T5 systems with the same light output
- Operates lamps in parallel (which means if one lamp fails, the other lamps remain on) – significantly reduces lamp maintenance costs
- Fast starting programmed start ballast < 700 milliseconds compared to standard T5 at > 1.1 to 1.5 seconds

GE UltraStart® T5 programmed start ballasts use a control circuit to apply very precise cathode heat to ensure lamp cathodes have reached optimum temperature during lamp starting. Precise starting reduces the amount of cathode degradation associated with each start and increases lamp life significantly. After starting the lamps, continuous cathode cutout technology (CCC) is applied—which eliminates wasted power to the lamps, resulting in high efficiencies. GE UltraStart® systems also have the advantage of operating lamps in parallel. Parallel (versus series) lamp operation ballasts typically reduce spot relamping costs by 50% or extend group relamping by 15% or more due to average lamp mortality early failures.

T5 Lamps

GE T5 lamps can be electrically characterized into two groups:

High Efficiency (HE) Lamps (F14T5, F21T5, F28T5, F35T5 – standard, high-lumen and Watt-Miser®)

These lamps are high efficiency (HE), delivering around 100 lumens per watt and, while operating at the same lamp arc current, can be operated on the same ballast if the ballast system power and starting voltage are appropriate for the lamp load.

High Output (HO) Lamps (F24T5, F39T5, F54T5, F49T5, F80T5 – standard and Watt-Miser®)

These lamps are driven for high light output and are slightly less efficient (LPW) than HE lamps. They have unique lamp arc currents and starting voltages by wattage that require a specific ballast for each HO lamp wattage.

See T8 ballast section (page 10-3) for nomenclature information.

T5 High Efficiency – Rapid Start 120V Residential Ballast

T5 Electronic Programmed Start For F13T5, F14T5, F21T5 and F28T5

78518 - GE21T5-120-RES

T5 High Efficiency - Rapid Start

Electronic ballast for (1) F21T5; or (1) F14T5; or (1) F13T5

- Line Voltage: 120 VAC, 60Hz
- Lamp End of Life Protection
- Rapid Start

General characteristics

Starting Temperature (MIN)	-18°C (0°F)
Ambient Temperature (MAX)	55°C (131°F)
Case Temperature (MAX)	75°C (167°F)
Sound Rating	A
Starting time	0.5s<t<2s

Dimensions

Wiring diagram – LFL 1a – see example on page 13-18	
Case dimensions – Ref Drawing -	
Length (L)	5.9 in (150 mm)
Width (W)	0.93 in (24 mm)
Height (H)	0.75 in (19 mm)
Mounting dimensions	
Mount Length (M)	5.6 in. (143 mm)
Weight	0.29 lbs
Lead lengths	**Length (± 1 in)**
Black/White	12 in (305 mm)
Blue	31 in (787 mm)
Red	19 in (483 mm)

Specifications by lamp and wattage

Lamp	# of Lamps	Line Volts	Input Watts	Nom. Line Amps	Power Factor % (>=)	Crest Factor (<=)	Min. Starting Temp (°F/°C)
F21T5	1	120	21	0.33	0.50	1.7	0/-18
F14T5	1	120	16	0.26	0.50	1.7	0/-18
F13T5	1	120	16	0.26	0.50	1.7	0/-18

Safety and performance UL/cUL Listed UL/cUL Listed Class P UL/cUL Listed Type 1 Outdoor Meets FCC Part 18 Consumer Limits Meets ANSI Standard C62.41-2002 OCV 300V Product is compliant with material restriction requirements of RoHS Meets November 14 DOE standards No PCB's

78811 - GE28T5-120-RES

T5 High Efficiency - Rapid Start

Electronic ballast for (1) F28T5; or (1) F21T5; or (1) F14T5

- Line Voltage: 120 VAC, 60Hz
- Lamp End of Life Protection
- Rapid Start
- Series Lamp Operation

General characteristics

Starting Temperature (MIN)	-18°C (0°F)
Ambient Temperature (MAX)	55°C (131°F)
Case Temperature (MAX)	75°C (167°F)
Sound Rating	A
Starting time	0.8s<t<1.3s

Dimensions

Wiring diagram – LFL 1b – see example on page 13-18	
Case dimensions – Ref Drawing -	
Length (L)	5.9 in (150 mm)
Width (W)	0.93 in (24 mm)
Height (H)	0.75 in (19 mm)
Mounting dimensions	
Mount Length (M)	5.6 in. (143 mm)
Weight	0.29 lbs
Lead lengths	**Length (± 1 in)**
Black/White	19 in (483 mm)
Blue	31 in (787 mm)
Red	19 in (483 mm)

Specifications by lamp and wattage

Lamp	# of Lamps	Line Volts	Input Watts	Nom. Line Amps	Power Factor % (>=)	Crest Factor (<=)	Min. Starting Temp (°F/°C)
F28T5	1	120	30.5	0.475	0.50	1.7	0/-18
F21T5	1	120	24.3	0.39	0.50	1.7	0/-18
F14T5	2	120	30.5	0.47	0.50	1.7	0/-18

Safety and performance UL/cUL Listed UL/cUL Listed Class P UL/cUL Listed Type 1 Outdoor Meets FCC Part 18 Consumer Limits Meets ANSI Standard C62.41-2002 OCV 300V Product is compliant with material restriction requirements of RoHS Meets November 14 DOE standards No PCB's Type HL

80021 - GE28T5/2-120-RES

T5 High Efficiency - Rapid Start

Electronic ballast for (2) F28T5; or (2) F21T5; or (2) F14T5

- Line Voltage: 120 VAC, 60Hz
- Lamp End of Life Protection
- Rapid Start
- Normal Power Factor Correction

General characteristics

Starting Temperature (MIN)	-18°C (0°F)
Ambient Temperature (MAX)	55°C (131°F)
Case Temperature (MAX)	75°C (167°F)
Sound Rating	A
Remote Mounting	18 ft max Lead Length, 18AWG

Dimensions

Wiring diagram – LFL 2a – see example on page 13-18	
Case dimensions – Ref Drawing -	
Length (L)	9 in (230 mm)
Width (W)	0.88 in (22.5 mm)
Height (H)	0.88 in (22.5 mm)
Mounting dimensions	
Mount Length (M)	8.75 in. (222 mm)
Weight	0.67 lbs
Lead lengths	**Length (± 1 in)**
Black/White	18 in (457 mm)
Blue	27 in (686 mm)
Red	27 in (686 mm)
Yellow	27 in (686 mm)

Specifications by lamp and wattage

Lamp	# of Lamps	Line Volts	Input Watts	Nom. Line Amps	Power Factor % (>=)	Crest Factor (<=)	Min. Starting Temp (°F/°C)
F28T5	2	120	60	0.96	0.50	1.7	0/-18
F21T5	2	120	44	0.78	0.50	1.7	0/-18
F14T5	2	120	31	0.62	0.50	1.7	0/-18

Safety and performance UL/cUL Listed UL/cUL Listed Class P UL/cUL Listed Type 1 Outdoor Meets FCC Part 18 Consumer Limits Meets ANSI Standard C62.41-2002 OCV 300V Product is compliant with material restriction requirements of RoHS Meets November 14 DOE standards No PCB's Meets Energy Star Version 1.0 Type HL

See page E-1 for warranty information.

*T5 lamp lengths are noted to nearest foot and are not exact lengths as noted in feet. See GE Lamp Catalog for exact lamp length.

T5 High Efficiency – Programmed Start

T5 Electronic Programmed Start For F14 (2 ft), F21 (3 ft), F28 (4 ft), F35 (5 ft) HE T5 Lamps*

68994 – GE228MVPS-MC-H (replaces 99653)

T5 High Efficiency - UltraStart® Programmed Start

2 – F21-F28T5HE, 120 to 277 UltraStart® PRS High Light 1.15 BF A Can

- High Efficiency T5 ballast with Continuous Cathode Cutout Technology
- Lower Maintenance Costs with Parallel Lamp Operation
- Fast Starting Time <700ms
- Multi-Voltage technology means a single ballast handles voltage from 108V to 305V
- Auto-Restart withstands temporary losses in power without the need to cycle power

General characteristics

Ballast Type	Electronic – Programmed / Rapid Start
Starting Method	Programmed start
Lamp Wiring	Parallel
Line Voltage Regulation (+/-)	10%
Ambient Temperature (MAX)	131°F (55°C)
Case Temperature (MAX)	90°C (194°F)
Ballast Factor	High (1.15)
Power Factor Correction	Active
Sound Rating	A (20-24 decibels)
Additional Info	Auto-restart, End-of-Life Protection (EOL), Thermally protected, Universal voltage, Anti-striation control

Electrical characteristics

Supply Current Frequency	50/60 Hz

Order information

10 Pack	Pallet Pack	DIY Pack	IP Pack
68994			

Dimensions

Wiring diagram – LFL 4a – see example on page 13-17	
Case dimensions – Ref Drawing -A Can – see page 13-19	
Length (L)	9.5 in (241 mm)
Width (W)	1.3 in (33 mm)
Height (H)	1.0 in (25.4 mm)
Mounting dimensions	
Mount Length (M)	8.9 in (226 mm)
Mount Slots (MS)	0.3 in (8 mm)
Weight	1.0 lbs
Exit Type	Side
Remote Mounting Distance to Lamp	8 ft
Remote Mounting Wire Gauge	18 AWG
Lead lengths	**Length (± 1 in)**
White and Black	20 in (508 mm)
Blue and Red	26 in (660 mm)
Yellow	37 in (940 mm)

Specifications by lamp and wattage

Lamp	# of Lamps	Line Volts	System Watts	Nom. Line Current	System Ballast Factor	Ballast Efficacy Factor	Power Factor % (>=)	Crest Factor (<=)	THD% (<=)	Min. Starting Temp (°F/°C)
	2	277	71	0.26 A	1.15	1.61	99	1.4	6	0/-18
F28T5HE	2	120	73	0.61 A	1.15	1.57	99	1.4	6	0/-18
	2	277	69	0.25 A	1.16	1.68	99	1.4	6	0/-18
F28T5HL	2	120	73	0.61 A	1.16	1.59	99	1.4	7	0/-18
	2	277	69	0.25 A	1.12	1.63	98	1.4	6	32/0
F28T5WM	2	120	71	0.59 A	1.12	1.58	99	1.4	7	32/0
	2	277	56	0.21 A	1.24	2.21	98	1.4	7	32/0
F21T5HE	2	120	57	0.48 A	1.24	2.18	99	1.4	7	32/0

Safety and performance UL Type CC UL Type 1 Outdoor UL Listed UL Type HL FCC – CLASS A Non-Consumer UL Class P Meets ANSI Standard C62.41-1991
Product is compliant with material restriction requirements of RoHS Meets ANSI Standard C82.11- cons 2002 No PCB's

68993 – GE228MVPS-MC (replaces 99655)

T5 High Efficiency - UltraStart® Programmed Start

2 or 1 – F14-F28T5HE, 120 – 277 UltraStart® PRS Normal Light - .95 BF A Can

- High Efficiency T5 ballast with Continuous Cathode Cutout Technology
- Lower Maintenance Costs with Parallel Lamp Operation
- Fast Starting Time <700ms
- Multi-Voltage technology means a single ballast handles voltage from 108V to 305V
- Auto-Restart withstands temporary losses in power without the need to cycle power

General characteristics

Ballast Type	Electronic – Programmed / Rapid Start
Starting Method	Programmed start
Lamp Wiring	Parallel
Line Voltage Regulation (+/-)	10%
Ambient Temperature (MAX)	131°F (55°C)
Case Temperature (MAX)	70°C (158°F)
Ballast Factor	Normal
Power Factor Correction	Active
Sound Rating	A (20-24 decibels)
Additional Info	Auto-restart, End-of-Life Protection (EOL), Thermally protected, Universal voltage, Anti-striation control

Electrical characteristics

Supply Current Frequency	50/60 Hz

Order information

10 Pack	Pallet Pack	DIY Pack	IP Pack
68993			

Dimensions

Wiring diagram – LFL 4a – see example on page 13-17	
Case dimensions – Ref Drawing -A Can – see page 13-19	
Length (L)	9.5 in (241 mm)
Width (W)	1.3 in (33 mm)
Height (H)	1.0 in (25.4 mm)
Mounting dimensions	
Mount Length (M)	8.9 in (226 mm)
Mount Slots (MS)	0.3 in (8 mm)
Weight	1.0 lbs
Exit Type	Side
Remote Mounting Distance to Lamp	8 ft
Remote Mounting Wire Gauge	18 AWG
Lead lengths	**Length (± 1 in)**
White and Black	20 in (508 mm)
Blue and Red	26 in (660 mm)
Yellow	37 in (940 mm)

Specifications by lamp and wattage

Lamp	# of Lamps	Line Volts	System Watts	Nom. Line Current	System Ballast Factor	Ballast Efficacy Factor	Power Factor% (>=)	Crest Factor (<=)	THD% (<=)	Min. Starting Temp (°F/°C)
	2	277	60	0.22 A	0.96	1.60	99	1.4	6	0/-18
	1	277	41	0.16 A	1.21	2.95	97	1.4	9	0/-18
	2	120	62	0.53 A	0.96	1.55	99	1.4	7	0/-18
F28T5HE	1	120	41	0.35 A	1.21	2.95	99	1.4	8	0/-18
	2	277	60	0.23 A	0.96	1.60	98	1.4	6	32/0
	1	277	41	0.15 A	1.21	2.95	97	1.4	10	32/0
	2	120	62	0.52 A	0.96	1.55	99	1.4	7	32/0
F28T5HL	1	120	41	0.35 A	1.21	2.95	99	1.4	8	32/0
	2	277	58	0.22 A	0.98	1.69	98	1.4	6	32/0
F28T5WM	2	120	59	0.50 A	0.98	1.66	99	1.4	7	32/0
	2	277	50	0.18 A	1.04	2.08	98	1.4	7	32/0
F21T5HE	2	120	51	0.43 A	1.04	2.04	99	1.4	8	32/0
	2	277	37	0.14 A	1.10	2.97	97	1.4	10	32/0
F14T5HE	2	120	37	0.32 A	1.10	2.97	99	1.4	9	32/0
	2	277	36	0.13 A	1.10	3.06	97	1.4	11	32/0
F14T5WM	2	120	36	0.30 A	1.10	3.06	99	1.4	9	32/0

Safety and performance UL Type CC UL Type 1 Outdoor UL Listed UL Type HL FCC – CLASS A Non-Consumer UL Class P cUL Listed Meets ANSI Standard C62.41-1991
Product is compliant with material restriction requirements of RoHS Meets ANSI Standard C82.11- cons 2002 No PCB's

See page E-1 for warranty information.

T5 High Output – Programmed Start

T5 Electronic Programmed Start For T5 HO Lamps*

68976 – GE224MVPS-N

T5 High Output - Programmed Start

2 – F24T5HO PRS UNV 50/60 Hz C Can

- Electronic ballasts for all general fluorescent applications
- Extends lamp life in frequently switched applications
- Reduced lamp replacement cost; ideal for use with occupancy sensors

General characteristics

Ballast Type	Electronic – Programmed / Rapid Start
Starting Method	Programmed start
Lamp Wiring	Series
Line Voltage Regulation (+/-)	10%
Ambient Temperature (MAX)	131°F (55°C)
Case Temperature (MAX)	70°C (158°F)
Ballast Factor	Normal
Power Factor Correction	Active
Sound Rating	A (20-24 decibels)
Additional Info	Auto-restart, End-of-Life Protection (EOL), Thermally protected, Universal voltage

Electrical characteristics

Supply Current Frequency	50 Hz/60 Hz

Dimensions

Wiring diagram – LFL 4a – see example on page 13-17	
Case dimensions – Ref Drawing -C Can – see page 13-19	
Length (L)	9.5 in (241.3 mm)
Width (W)	1.30 in (33 mm)
Height (H)	1.0 in (25.4 mm)
Mounting dimensions	
Mount Length (M)	8.9 in (226 mm)
Mount Slots (MS)	0.25 in (6 mm)
Weight	1.0 lb
Exit Type	Poke-in
Remote Mounting Distance to Lamp	18 ft
Remote Mounting Wire Gauge	18 AWG

Order information

10 Pack	Pallet Pack	DIY Pack	IP Pack
68976			

Specifications by lamp and wattage

Lamp	# of Lamps	Line Volts	System Watts	Nom. Line Current	System Ballast Factor	Ballast Efficacy Factor	Power Factor % (>=)	Crest Factor (<=)	THD (<=)	Min. Starting Temp (°F/°C)
	2	277	50	0.18 A	0.98	1.96	98	1.4	5	0/-18
	1	277	32	0.11 A	1.14	3.56	96	1.4	6	0/-18
	2	120	51	0.42 A	0.98	1.92	99	1.4	6	0/-18
F24T5HO	1	120	32	0.27 A	1.14	3.56	99	1.4	7	0/-18
	2	277	47	0.17 A	1.09	2.32	98	1.4	5	32/0
	1	277	29	0.11 A	1.20	4.14	96	1.4	6	32/0
	2	120	48	0.40 A	1.09	2.27	99	1.4	6	32/0
FT24W/2G11	1	120	29	0.24 A	1.20	4.14	99	1.4	7	32/0
	1	277	36	0.13 A	1.13	3.14	97	1.4	5	32/0
FT36W/2G11	1	120	37	0.31 A	1.13	3.05	99	1.4	6	32/0
	1	277	46	0.17 A	1.08	2.35	98	1.4	5	32/0
F39T5/HO	1	120	47	0.39 A	1.08	2.30	99	1.4	6	32/0

Safety and performance UL Type 1 Outdoor UL Type HL FCC – CLASS A Non-Consumer UL Class P UL Listed No PCB's UL Type CC ANSI Standard C82.11 – Cons 2002

ANSI Standard C62.41 – 1991 Product is compliant with material restriction requirements of RoHs

47540 – B239PUNV-DOG1C

T5 High Output - Programmed Start

2 – F39T5HO PRS UNV 50/60 Hz D Can

- Electronic ballasts for all general fluorescent applications
- Extends lamp life in frequently switched applications
- Reduced lamp replacement cost; ideal for use with occupancy sensors

General characteristics

Ballast Type	Electronic – Programmed / Rapid Start
Starting Method	Programmed start
Lamp Wiring	Series
Line Voltage Regulation (+/-)	10%
Ambient Temperature (MAX)	105°F (41°C)
Case Temperature (MAX)	70°C (158°F)
Ballast Factor	Normal
Power Factor Correction	Active
Sound Rating	A (20-24 decibels)
Additional Info	Auto-restart, End-of-Life Protection (EOL), Thermally protected, Universal voltage

Electrical characteristics

Supply Current Frequency	50 Hz/60 Hz

Dimensions

Wiring diagrams – LFL 4b – see example on page 13-17	
Case dimensions – Ref Drawing -D Can – see page 13-19	
Length (L)	16.9 in (429 mm)
Width (W)	1.18 in (30 mm)
Height (H)	1.0 in (25 mm)
Mounting dimensions	
Mount Length (M)	16.2 in (411 mm)
Mount Slots (MS)	0.25 in (6 mm)
Weight	
Exit Type	Poke-in
Remote Mounting Distance to Lamp	18 ft
Remote Mounting Wire Gauge	18 AWG

Order information

10 Pack	Pallet Pack	DIY Pack	IP Pack
47540			

Specifications by lamp and wattage

Lamp	# of Lamps	Line Volts	System Watts	Nom. Line Current	System Ballast Factor	Ballast Efficacy Factor	Power Factor % (>=)	Crest Factor (<=)	THD (<=)	Min. Starting Temp (°F/°C)
	2	120	89	0.74 A	0.98	1.10		1.7	10	0/-18
	2	277	88	0.32 A	0.98	1.11		1.7	10	0/-18
	1	120	47	0.39 A	0.98	2.08		1.7	10	0/-18
F39T5/HO	1	277	47	0.17 A	0.95	2.02		1.7	10	0/-18
	2	120	71	0.59 A	0.98	1.38	97	1.7	10	0/-18
	2	277	70	0.25 A	0.95	1.35	97	1.7	10	0/-18
	1	120	38	0.31 A	0.98	2.57		1.7	10	0/-18
FT39W/4P	1	277	38	0.14 A	0.90	2.36		1.7	10	0/-18
	2	120	59	0.51 A	0.98	1.66		1.7	10	0/-18
	2	277	59	0.22 A	0.95	1.61		1.7	10	0/-18
	1	120	32	0.26 A	0.98	3.06		1.7	10	0/-18
F24T5/HO	1	277	32	0.12 A	0.90	2.81		1.7	10	0/-18

Safety and performance UL Type 1 Outdoor UL Type HL FCC – CLASS A Non-Consumer UL Class P CSA UL Listed

*T5 lamp lengths are noted to nearest foot and are not exact lengths as noted in feet. See GE Lamp Catalog for exact lamp length.

T5 High Output – Programmed Start

T5 Electronic Programmed Start For T5 HO Lamps*

67562 – GE254MVPS90-A

T5 High Output - UltraStart® Programmed Start

2 or 1 – F54T5HO 120 to 277V UltraStart® PRS High Temp A Can

- High Efficiency T5 ballast with Continuous Cathode Cutout Technology
- Lower Maintenance Costs with Parallel Lamp Operation
- Fast Starting Time <700ms
- Multi-Voltage technology means a single ballast handles voltage from 108V to 305V
- Auto-Restart withstands temporary losses in power without the need to cycle power

General characteristics

Ballast Type	Electronic – Programmed / Rapid Start
Starting Method	Programmed start
Lamp Wiring	Parallel
Line Voltage Regulation (+/-)	10%
Ambient Temperature (MAX)	131°F (55°C)
Case Temperature (MAX)	90°C (194°F)
Ballast Factor	Normal
Power Factor Correction	Active
Sound Rating	A (20-24 decibels)
Additional Info	Auto-restart, End-of-Life Protection (EOL), Thermally protected, Universal voltage, Anti-striation control

Electrical characteristics

Supply Current Frequency	50/60 Hz

Order information

10 Pack	Pallet Pack	DIY Pack	IP Pack
67562			

Dimensions

Wiring diagram – LFL 4a (One lamp operation) & T51 – see example on page 13-18	
Case dimensions – Ref Drawing -F – see page 13-19	
Length (L)	9.5 in (241.3 mm)
Width (W)	1.7 in (43.2 mm)
Height (H)	1.2 in (30.5 mm)
Mounting dimensions	
Mount Length (M)	8.9 in (226 mm)
Mount Slots (MS)	0.25 in (6 mm)
Weight	1.50 lbs
Exit Type	Side
Remote Mounting Distance to Lamp	12 ft
Remote Mounting Wire Gauge	18 AWG
Lead lengths	**Length (± 1 in)**
White and Black	25 in (635 mm)
Blue and Red	34 in (864 mm)
Yellow	45 in (1143 mm)

Specifications by lamp and wattage

Lamp	# of Lamps	Line Volts	System Watts	Nom. Line Current	System Ballast Factor	Ballast Efficacy Factor	Power Factor% (>=)	Crest Factor (<=)	THD% (<=)	Min. Starting Temp (°F/°C)
	2	120	117	0.98	1.00	0.85	1.00	1.4	4.4	-20/-29
	2	277	114	0.41	1.10	0.96	0.99	1.4	5.4	-20/-29
	1	120	63	0.53	1.00	1.59	1.00	1.4	6.4	-20/-29
F54T5HO	1	277	62	0.23	1.10	1.77	0.97	1.4	6.6	-20/-29
	2	120	109	0.90	1.00	0.92	1.00	1.4	4.6	0/-18
	2	277	107	0.40	1.12	1.05	0.99	1.4	5.2	0/-18
	1	120	61	0.51	1.00	1.64	1.00	1.4	6.7	0/-18
F54T5WM	1	277	60	0.22	1.12	1.87	0.97	1.4	7.7	0/-18
	2	120	105	0.88	1.00	0.95	1.00	1.4	4.8	-20/-29
	2	277	104	0.40	1.10	1.06	0.99	1.4	5.3	-20/-29
	1	120	58	0.48	1.00	1.72	1.00	1.4	6.9	-20/-29
F54T5/47W	1	277	57	0.22	1.10	1.93	0.96	1.4	8.0	-20/-29
	2	120	110	0.90	0.95	0.86	1.00	1.4	4.7	-20/-29
	2	277	107	0.39	0.95	0.89	0.99	1.4	5.4	-20/-29
	1	120	59	0.49	1.08	1.83	1.00	1.4	6.6	-20/-29
F58T8	1	277	59	0.22	1.08	1.83	0.96	1.4	7.3	-20/-29
	2	120	116	0.97	0.86	0.74	1.00	1.4	4.9	0/-18
	2	277	112	0.41	0.86	0.77	0.99	1.4	5.4	0/-18
	1	120	61	0.51	1.03	1.69	1.00	1.4	6.8	0/-18
FT55W/4P	1	277	60	0.23	1.03	1.72	0.97	1.4	8.0	0/-18
	2	120	118	1.00	1.05	0.89	1.00	1.4	4.6	0/-18
	2	277	116	0.43	1.06	0.91	0.99	1.4	5.2	0/-18
	1	120	64	0.53	1.18	1.84	1.00	1.4	6.6	0/-18
FT50W/4P	1	277	63	0.24	1.18	1.87	0.97	1.4	7.4	0/-18

Safety and performance

UL Type 1 Outdoor UL Type CC UL Listed Meets ANSI Standard C62.41-1991 UL Class P Meets ANSI Standard C82.11- cons 2002

FCC – CLASS A Non-Consumer Product is compliant with material restriction requirements of RoHS

High Temperature Rated: Suitable for high temperature applications 80°C max case temp 5 yr warranty.

See page E-1 for warranty information.

T5 High Output – Programmed Start

T5 Electronic Programmed Start For T5 HO Lamps*

33957 - GE254MVPS-D-1

T5 High Output - UltraStart® Programmed Start

2 or 1 – F54T5HO 120 to 277V UltraStart® PRS High Temp D Can

- High Efficiency T5 ballast with Continuous Cathode Cutout Technology
- Fast Starting Time <700ms
- Multi-Voltage technology means a single ballast handles voltage from 108V to 305V
- Auto-Restart withstands temporary losses in power without the need to cycle power
- Anti-Striation Control for better light quality, with no striations.
- Cold temperature -20°F Minimum Starting Temperature

General characteristics

Ballast Type	Electronic –Program / Rapid Start
Starting Method	Programmed start
Lamp Wiring	Series
Line Voltage Regulation (+/-)	10%
Ambient Temperature (MAX)	40°C (104°F)
Case Temperature (MAX)	70°C (158°F)
Ballast Factor	Normal
Power Factor Correction	Active
Sound Rating	A (20-24 decibels)
Enclosure Type	Metal
Additional Info	Auto-restart, End of Life Protection (EOL), Thermally protected, Universal voltage

Electrical characteristics

Supply Current Frequency	50/60 Hz

Order information

10 Pack	Pallet Pack	DIY Pack	IP Pack
33957			

Dimensions

Wiring diagram – LFL 4a – see example on page 13-17	
Case dimensions – Ref Drawing -A Can – see page 13-19	
Length (L)	9.5 in (241 mm)
Width (W)	1.3 in (33 mm)
Height (H)	1.0 in (25.5 mm)
Mounting dimensions	
Mount Length (M)	8.9 in (226 mm)
Mount Width (X or F)	0.9 in (22 mm)
Mount Slots (MS)	0.3 in (8 mm)
Weight	1.1 lbs
Exit Type	Side
Remote Mounting Distance to Lamp	18 ft
Remote Mounting Wire Gauge	18 AWG

Specifications by lamp and wattage

Lamp	# of Lamps	Line Volts	System Watts	Nom. Line Current	System Ballast Factor	Ballast Efficacy Factor	Power Factor% (>=)	Crest Factor (<=)	THD% (<=)	Min. Starting Temp (°F/°C)
	2	120	106	0.93 A	1.00	0.94	99	1.7	5	-20/-29
	2	277	105	0.40 A	1.00	0.95	98	1.7	8	-20/-29
	1	120	67	0.60 A	0.13	0.19	99	1.5	6	-20/-29
F54T5/47W	1	277	67	0.26 A	1.13	1.69	98	1.5	8	-20/-29
	2	120	106	0.88 A	0.99	0.93	98	1.7	10	-20/-29
	2	277	105	0.38 A	0.98	0.95	97	1.7	10	-20/-29
	1	120	53	0.44 A	0.90	1.70	99	1.7	10	-20/-29
F54T5/49W	1	277	58	0.21 A	1.04	1.70	90	1.7	10	-20/-29
	2	120	120	1.00 A	1.00	0.84	98	1.7	10	-20/-29
	2	277	117	0.43 A	1.00	0.85	97	1.7	10	-20/-29
	1	120	62	0.52 A	1.03	1.46	98	1.7	10	-20/-29
F54T5/HO	1	277	62	0.23 A	1.03	1.49	90	1.7	10	-20/-29
	2	120	112	0.94 A	1.00	0.89	99	1.7	5	0/-18
	2	277	111	0.41 A	1.00	0.90	98	1.7	8	0/-18
	1	120	71	0.59 A	1.13	1.59	99	1.5	6	0/-18
F54T5/WM	1	277	71	0.26 A	1.13	1.59	98	1.5	8	0/-18
	2	120	108	0.91 A	0.95	0.88	99	1.6	7	-20/-29
	2	277	105	0.38 A	0.95	0.90	98	1.6	8	-20/-29
	1	120	69	0.58 A	1.09	1.58	99	1.6	7	-20/-29
F58T8	1	277	69	0.25 A	1.09	1.58	97	1.6	11	-20/-29
	2	120	89	0.75 A	1.17	1.31	99	1.6	7	-20/-29
	2	277	84	0.31 A	1.17	1.39	98	1.6	9	-20/-29
	1	120	55	0.46 A	1.29	2.35	99	1.6	7	-20/-29
FT39W/4P	1	277	55	0.21 A	1.28	2.33	96	1.6	15	-20/-29
	2	120	118	1.01 A	1.12	0.85	98	1.7	10	-20/-29
	2	277	115	0.43 A	1.12	0.91	98	1.7	10	-20/-29
	1	120	61	0.52 A	1.15	1.58	98	1.7	10	-20/-29
FT50W/4P	1	277	61	0.23 A	1.15	1.61	90	1.7	10	-20/-29
	2	120	112	0.94 A	0.91	0.80	98	1.7	10	-20/-29
	2	277	109	0.4 A	0.91	0.80	98	1.7	10	-20/-29
	1	120	58	0.51 A	0.93	1.49	98	1.7	10	-20/-29
FT55W/4P	1	277	58	0.22 A	0.93	1.51	90	1.7	10	-20/-29

Safety and performance

Product is compliant with material restriction requirements of RoHS UL Type 1 Outdoor UL Type HL FCC – CLASS A Non-Consumer ANSI-C62.41-1991

ANSI-C82.11-Cons 2002 UL Class P UL Type CC UL Listed CSA

High Temperature Rated: Suitable for high temperature applications 70C max case temp 5 yr warranty or 90C max case temp 3 yr warranty

See page E-1 for warranty information.

*T5 lamp lengths are noted to nearest foot and are not exact lengths as noted in feet. See GE Lamp Catalog for exact lamp length.

T5 High Output – Programmed Start

T5 Electronic Programmed Start For T5 HO Lamps*

94131 – GE454MVPS90-E-S (replaces 73192)

T5 High Output - UltraStart® Programmed Start

4/2 – F54T5HO 120 to 277 UltraStart® PRS High Temp E Can

- High Efficiency T5 ballast with Continuous Cathode Cutout Technology
- Lower Maintenance Costs with Parallel Lamp Operation
- Multi-Voltage technology means a single ballast handles voltage from 108V to 305V
- Auto-Restart withstands temporary losses in power without the need to cycle power
- UltraCool® Operation 90°C case rating
- Anti-Striation Control for better light quality, with no striations.
- Individual lamp End of Lamp Life protection - only one lamp shuts down at end of life.
- Cold temperature -20F Minimum Starting Temperature
- The ballast should have the step dimming features and be able to provide 50% input power (+/-15%) in the dimming mode by shutdown 2 of the 4 lamps.

General characteristics

Ballast Type	Electronic - Program / Rapid Start
Starting Method	Programmed start
Lamp Wiring	Parallel
Line Voltage Regulation (+/-)	10%
Ambient Temperature (MAX)	55°C (131°F)
Case Temperature (MAX)	90°C (194°F)
Ballast Factor	Normal
Power Factor Correction	Active
Sound Rating	A (20-24 decibels)
Enclosure Type	Metal
Additional Info	Auto-restart, End of Life Protection (EOL), Thermally protected

Electrical characteristics

Supply Current Frequency	50Hz/60 Hz

Order information

10 Pack	Pallet Pack	DIY Pack	IP Pack
94131			

Dimensions

Wiring diagram – LFL 4c – see example on page 13-17	
Case dimensions – Ref Drawing -G Can – see page 13-19	
Length (L)	16.7 in (424 mm)
Width (W)	1.7 in (41 mm)
Height (H)	1.2 in (30.5 mm)
Mounting dimensions	
Mount Length (M)	16.1 in (410 mm)
Weight	2.73 lbs
Exit Type	Side
Remote Mounting Distance to Lamp	12 ft
Remote Mounting Wire Gauge	18 AWG
Lead lengths	**Length (± 1 in.)**
Black/White	25.0 in (635 mm)
Blue	34.0 in (864 mm)
Blue/White	34.0 in (864 mm)
Gray	25.0 in (635 mm)
Orange	47.0 in (1195 mm)
Red	34.0 in (864 mm)
Red/White	34.0 in (864 mm)
Yellow	47.0 in (1195 mm)

Specifications by lamp and wattage

Lamp	# of Lamps	Line Volts	System Watts	Nom. Line Current	System Ballast Factor	Ballast Efficacy Factor	Power Factor% (>=)	Crest Factor (<=)	THD% (<=)	Min. Starting Temp (°F/°C)
	4	277	222	0.84 A	1.00	0.45	99	1.7	4	-20/-29
	3	277	171	0.66 A	1.01	0.59	99	1.7	5	-20/-29
	2	277	114	0.44 A	1.00	0.87	98	1.7	8	-20/-29
	4	120	227	2.02 A	0.99	0.44	99	1.7	6	-20/-29
	3	120	174	1.59 A	0.99	0.57	99	1.7	7	-20/-29
F54T5/HO	2	120	114	1.02 A	1.00	0.87	99	1.7	8	-20/-29
	4	277	204	0.76 A	1.00	0.49	99	1.7	4	-20/-29
	3	277	160	0.61 A	1.00	0.62	99	1.7	6	-20/-29
	2	277	105	0.39 A	1.00	0.95	98	1.7	7	-20/-29
	4	120	208	1.83 A	1.00	0.48	99	1.7	4	-20/-29
	3	120	162	1.44 A	1.00	0.62	99	1.7	7	-20/-29
F54T5/47W	2	120	105	0.92 A	1.00	0.95	99	1.7	9	-20/-29
	4	277	210	0.76 A	1.03	0.49	99	1.7	4	-20/-29
	3	277	164	0.61 A	1.03	0.63	99	1.7	5	-20/-29
	2	277	109	0.39 A	1.03	0.95	98	1.7	7	-20/-29
	4	120	215	1.83 A	1.04	0.48	99	1.7	6	-20/-29
	3	120	166	1.44 A	1.04	0.63	99	1.7	7	-20/-29
F54T5/49W	2	120	109	0.92 A	1.05	0.97	99	1.7	9	-20/-29
	4	277	211	0.78 A	1.01	0.48	99	1.7	4	-20/-29
	3	277	165	0.63 A	1.02	0.62	99	1.7	5	-20/-29
	2	277	109	0.41 A	1.04	0.95	98	1.7	7	-20/-29
	4	120	216	1.89 A	1.04	0.48	99	1.7	6	-20/-29
	3	120	168	1.49 A	1.03	0.61	99	1.7	7	-20/-29
F54T5WM	2	120	109	0.96 A	1.03	0.94	99	1.7	9	-20/-29
	4	277	208	0.77 A		0.00	99	1.7	4	-20/-29
	3	277	161	0.61 A		0.00	99	1.7	6	-20/-29
	2	277	107	0.40 A		0.00	98	1.7	8	-20/-29
	4	120	213	1.85 A		0.00	99	1.7	6	-20/-29
	3	120	164	1.44 A		0.00	99	1.7	7	-20/-29
F58T8	2	120	107	0.94 A		0.00	99	1.7	9	-20/-29
	4	277	210	0.77 A	0.92	0.44	99	1.7	4	0/-18
	3	277	162	0.62A	0.91	0.56	99	1.7	5	0/-18
	2	277	109	0.40 A	0.92	0.85	98	1.7	7	0/-18
	4	120	215	1.87 A	0.91	0.42	99	1.7	6	0/-18
	3	120	165	1.47 A	0.91	0.55	99	1.7	7	0/-18
FT55W/2G11	2	120	109	0.93 A	0.93	0.85	99	1.7	9	0/-18
	4	277	219	0.83 A	0.90	0.41	99	1.7	4	0/-18
	3	277	170	0.66 A	0.90	0.53	99	1.7	5	0/-18
	2	277	112	0.43 A	0.90	0.80	98	1.7	8	0/-18
	4	120	224	2.01 A	0.89	0.40	99	1.7	6	0/-18
	3	120	172	1.57 A	0.89	0.52	99	1.7	7	0/-18
FT50W/2G11	2	120	112	1.00 A	0.90	0.80	99	1.7	9	0/-18

Safety and performance

Product is compliant with material restriction requirements of RoHS UL Type 1 Outdoor UL Type HL FCC – CLASS A Non-Consumer ANSI-C62.41-1991

ANSI-C82.11-Cons 2002 UL Class P UL Type CC UL Listed cUL Listed No PCB's For one lamp operation, safety only DOE 2014 ballast rule - 10 CFR Part 430

High Temperature Rated: Suitable for high temperature applications 70C max case temp 5 yr warranty or 90C max case temp 3 yr warranty

See page E-1 for warranty information.

T5 High Output – Programmed Start

T5 Electronic Programmed Start For T5 HO Lamps*

67566 – GE454MVPS90-F (replaces 77114)

T5 High Output - UltraStart® Programmed Start

4-1 – F54T5HO 120 to 277 UltraStart® PS F Can

- High Efficiency T5 ballast with Continuous Cathode Cutout Technology
- Lower Maintenance Costs with Parallel Lamp Operation
- Fast Starting Time <700ms
- Multi-Voltage technology means a single ballast handles voltage from 108V to 305V
- Auto-Restart withstands temporary losses in power without the need to cycle power
- Anti-Striation Control for better light quality, with no striations
- 90°C case rating/UL Approved 55C Ambient Rating
- Individual lamp End of Lamp Life protection - only one lamp shuts down at end of life
- Cold temperature -20°F Minimum Starting Temperature

General characteristics

Ballast Type	Electronic - Program / Rapid Start
Starting Method	Programmed start
Lamp Wiring	Parallel
Line Voltage Regulation (+/-)	10%
Ambient Temperature (MAX)	55°C (131°F)
Case Temperature (MAX)	90°C (194°F)
Ballast Factor	Normal
Power Factor Correction	Active
Sound Rating	A (20-24 decibels)
Enclosure Type	Metal
Additional Info	Auto-restart, End of Life Protection (EOL), Thermally protected

Electrical characteristics

Supply Current Frequency	50Hz/60 Hz

Order information

10 Pack	Pallet Pack	DIY Pack	IP Pack
65766	.		

Dimensions

Wiring diagram – LFL PS4– see example on page 13-18	
Case dimensions – Ref Drawing -E Can – see page 13-19	
Length (L)	11.75 in (298 mm)
Width (W)	1.7 in (43 mm)
Height (H)	1.2 in (30 mm)
Mounting dimensions	
Mount Length (M)	16.7 in (424 mm)
Weight	2.79 lbs
Exit Type	Side
Remote Mounting Distance to Lamp	8 ft
Remote Mounting Wire Gauge	18 AWG
Lead lengths	**Length (± 1 in.)**
Black	25.0 in (635 mm)
White	25.0 in (635 mm)

Specifications by lamp and wattage

Lamp	# of Lamps	Line Volts	System Watts	Nom. Line Current	System Ballast Factor	Ballast Efficacy Factor	Power Factor% (>=)	Crest Factor (<=)	THD% (<=)	Min. Starting Temp (°F/°C)
	4	120	206	1.73 A	0.86	0.42	99	1.4	5	0/-18
	4	277	203	0.75 A	0.86	0.42	97	1.4	8	0/-18
	3	120	168	1.41 A	0.91	0.54	99	7.0	6	0/-18
	3	277	168	0.63 A	0.91	0.54	97	1.4	10	0/-18
	2	120	125	1.04 A			99	1.4	7	0/-18
	2	277	124	0.48 A			94	1.4	16	0/-18
	1	120	64	0.54 A			99	1.4	10	0/-18
FT55W/4P	1	277	66	0.28 A			84	1.4	25	0/-18
	4	120	222	1.86 A	1.06	0.48	99	1.4	5	0/-18
	4	277	218	0.81 A	1.06	0.49	98	1.4	8	0/-18
	3	120	187	1.56 A	1.11	0.59	99	1.4	6	0/-18
	3	277	184	0.68 A	1.11	0.60	97	1.4	9	0/-18
	2	120	130	1.09 A			99	1.4	7	0/-18
	2	277	130	0.50 A			95	1.4	15	0/-18
	1	120	72	0.60 A			99	1.4	10	0/-18
FT50W/4P	1	277	73	0.31 A			85	1.4	26	0/-18
	4	120	208	1.73 A	0.95	0.46	99	1.4	5	-20/-29
	4	277	204	0.76 A	0.95	0.47	97	1.4	9	-20/-29
	3	120	176	1.47 A	0.99	0.56	99	1.4	6	-20/-29
	3	277	173	0.65 A	0.99	0.57	94	1.4	10	-20/-29
	2	120	128	1.07 A			99	1.4	7	-20/-29
	2	277	127	0.49 A			94	1.4	16	-20/-29
	1	120	67	0.57 A			99	1.4	10	-20/-29
F58T8	1	277	68	0.29 A			85	1.4	25	-20/-29
	4	120	214	1.79 A	1.00	0.47	99	1.4	5	0/-18
	4	277	210	0.78 A	1.00	0.48	98	1.4	8	0/-18
	3	120	181	1.51 A	1.01	0.56	99	1.4	6	0/-18
	3	277	178	0.66 A	1.01	0.57	97	1.4	9	0/-18
	2	120	130	1.09 A	0.96	0.74	99	1.4	7	0/-18
	2	277	135	0.51 A	0.96	0.71	95	1.4	15	0/-18
	1	120	69	0.58 A	1.12	1.62	99	1.4	10	0/-18
F54T5/WM	1	277	70	0.30 A	1.12	1.60	85	1.4	26	0/-18
	4	120	220	1.84 A	1.00	0.45	99	1.4	5	-20/-29
	4	277	216	0.80 A	1.00	0.46	98	1.4	8	-20/-29
	3	120	185	1.55 A	1.01	0.55	99	1.4	6	-20/-29
	3	277	182	0.68 A	1.01	0.55	97	1.4	9	-20/-29
	2	120	133	0.58 A	0.96	0.72	99	1.4	7	-20/-29
	2	277	132	0.50 A	0.96	0.72	95	1.4	15	-20/-29
	1	120	69	0.58 A	1.11	1.61	99	1.4	10	-20/-29
F54T5/HO	1	277	70	0.30 A	1.11	1.59	85	1.4	26	-20/-29

Safety and performance

Product is compliant with material restriction requirements of RoHS UL Type 1 Outdoor UL Type HL FCC – CLASS A Non-Consumer ANSI-C62.41-1991

ANSI-C82.11-Cons 2002 UL Class P UL Type CC UL Listed CSA

High Temperature Rated: Suitable for high temperature applications 70C max case temp 5 yr warranty or 90C max case temp 3 yr warranty

See page E-1 for warranty information.

*T5 lamp lengths are noted to nearest foot and are not exact lengths as noted in feet. See GE Lamp Catalog for exact lamp length.

T5 High Output – Programmed Start

T5 Electronic Programmed Start For T5 HO Lamps*

72280 – GE180MVPS-D

T5 High Output - UltraStart® Programmed Start

1 – F80T5HO 120 to 277 UltraStart® PRS D Can

- High Efficiency T5 ballast with Continuous Cathode Cutout Technology
- Lower Maintenance Costs with Parallel Lamp Operation
- Fast Starting Time <700ms
- Multi-Voltage technology means a single ballast handles voltage from 108V to 305V
- Auto-Restart withstands temporary losses in power without the need to cycle power
- Anti-Striation Control for better light quality, with no striations.
- Cold temperature -20°F Minimum Starting Temperature

General characteristics

Ballast Type	Electronic - Program / Rapid Start
Starting Method	Programmed start
Line Voltage Regulation (+/-)	10%
Ambient Temperature (MAX)	55°C (131°F)
Case Temperature (MAX)	70°C (158°F)
Ballast Factor	Normal
Power Factor Correction	Active
Sound Rating	A (20-24 decibels)
Enclosure Type	Metal
Additional Info	Auto-restart, End of Life Protection (EOL), Thermally protected, Universal voltage

Electrical characteristics

Supply Current Frequency	50Hz/60 Hz

Order information

10 Pack	Pallet Pack	DIY Pack	IP Pack
72280			

Dimensions

Wiring diagram – LFL PS1b – see example on page 13-18	
Case dimensions – Ref Drawing -D Can – see page 13-19	
Length (L)	16.7 in (424 mm)
Width (W)	1.18 in (30 mm)
Height (H)	1.0 in (25 mm)
Mounting dimensions	
Mount Length (M)	16.4 in (417 mm)
Weight	1.85 lbs
Exit Type	Side
Remote Mounting Distance to Lamp	8 ft
Remote Mounting Wire Gauge	18 AWG

Specifications by lamp and wattage

Lamp	# of Lamps	Line Volts	System Watts	Nom. Line Current	System Ballast Factor	Ballast Efficacy Factor	Power Factor% (>=)	Crest Factor (<=)	THD% (<=)	Min. Starting Temp (°F/°C)
	1	120	93	0.78 A	1.00	1.08	99	1.6	5	-20/-29
F80T5HO	1	277	91	0.34 A	1.00	1.10	98	1.6	8	-20/-29

Safety and performance

Product is compliant with material restriction requirements of RoHS UL Type 1 Outdoor UL Type HL FCC – CLASS A Non-Consumer ANSI-C62.41-1991

ANSI-C82.11-Cons 2002 UL Class P UL Type CC UL Listed CSA

See page E-1 for warranty information.

T5 Watt-Miser Electronic Program / Rapid Start Ballast
T5 Electronic Programmed Start

62728 – GE254PS347/480-F

T5 High Output - UltraStart® Programmed Rapid Start

2 or 1 – F54T5HO 347 to 480V PS High Temperature F Can LFL

- High Efficiency T5 ballast with Continuous Cathode Cutout Technology
- Lower Maintenance Costs with Parallel Lamp Operation
- Fast Starting Time <700ms
- GE 3-Stage 3G Transient Suppression - Meets IEEE/ANSI C Low line to line transient capability up to 6KV
- Auto-Restart withstands temporary losses in power without the need to cycle power
- Anti-Striation Control for better light quality, with no striations.
- 90°C case rating/UL Approved 55C Ambient Rating
- Individual lamp End of Lamp Life protection - only one lamp shuts down at end of life
- Cold temperature -20°F Minimum Starting Temperature

General characteristics

Ballast Type	Electronic - Program / Rapid Start
Starting Method	Programmed Rapid Start
Lamp Wiring	Parallel
Line Voltage Regulation (+/-)	10%
Ambient Temperature (MAX)	55°C (131°F)
Case Temperature (MAX)	90°C (194°F)
Ballast Factor	Normal
Power Factor Correction	Active
Sound Rating	A (20-24 decibels)
Enclosure Type	Metal Can
Additional Info	Lamp End-of-Life Safety Shutdown Circuit/Auto-restart/ Anti-striation control

Electrical characteristics

Supply Current Frequency	50 Hz/60 Hz

Order information

10 Pack	Pallet Pack	DIY Pack	IP Pack
62728	.		

Dimensions

Wiring diagram – LFL 4a– see example on page 13-17	
Case dimensions – Ref Drawing -F Can – see page 13-19	
Length (L)	11.8 in (298 mm)
Width (W)	1.7 in (43 mm)
Height (H)	1.2 in (30 mm)
Mounting dimensions	
Mount Length (M)	11.1 in (282 mm)
Weight	2.15 lbs
Exit Type	Side
Remote Mounting Distance to Lamp	12 ft
Remote Mounting Wire Gauge	18 AWG
Lead lengths	**Length (± 1 in.)**
Black	25.0 in (635 mm)
Black/White	25.0 in (635 mm)
Blue	34.0 in (864 mm)
Red	34.0 in(864 mm)
Yellow	45.0 in (1143 mm)

Specifications by lamp and wattage

Lamp	# of Lamps	Line Volts	System Watts	Nom. Line Current	System Ballast Factor	Ballast Efficacy Factor	Power Factor% (>=)	Crest Factor (<=)	THD% (<=)	Min. Starting Temp (°F/°C)
	2	347	118	0.36 A	1.00	1.69	98	1.4	5	-22/-30
	2	480	118	0.26 A	1.00	1.69	99	1.4	6	-22/-30
	1	347	73	0.22 A	1.10	1.37	98	1.4	5	-22/-30
F54T5/HO	1	480	73	0.16 A	1.10	1.37	96	1.4	8	-22/-30
	2	347	113	0.33 A	1.06	1.77	99	1.4	5	0/-18
	2	480	114	0.24 A	1.06	1.75	97	1.4	6	0/-18
	1	347	69	0.20 A	1.18	1.45	98	1.4	5	0/-18
FT50W/2G11	1	480	69	0.15 A	1.18	1.45	95	1.4	8	0/-18
	2	347	113	0.33 A	1.00	1.77	99	1.4	5	0/-18
	2	480	113	0.24 A	1.00	1.77	97	1.4	6	0/-18
	1	347	69	0.20 A	1.12	1.45	98	1.4	6	0/-18
F54T5/WM	1	480	69	0.15 A	1.12	1.43	95	1.4	8	0/-18
	2	347	109	0.32 A	0.86	1.83	99	1.4	5	0/-18
	2	480	109	0.24 A	0.86	1.83	97	1.4	6	0/-18
	1	347	68	0.20 A	1.03	1.47	98	1.4	6	0/-18
FT55W/4P	1	480	68	0.15 A	1.03	1.47	95	1.4	8	0/-18
	2	347	107	0.31 A	1.00	1.87	99	1.4	5	0/-18
	2	480	107	0.23 A	1.00	1.87	97	1.4	6	0/-18
	1	347	65	0.19 A	1.10	1.56	98	1.4	5	0/-18
F54T5/49W	1	480	65	0.14 A	1.10	1.54	95	1.4	8	0/-18
	2	347	104	0.31 A	1.00	1.92	99	1.4	5	0/-18
	2	480	104	0.22 A	1.00	1.92	97	1.4	6	0/-18
	1	347	63	0.19 A	1.10	1.59	98	1.4	6	0/-18
F54T5/47W	1	480	64	0.14 A	1.10	1.56	95	1.4	8	0/-18
	2	347	101	0.33 A	0.95	1.98	99	1.4	5	-22/-30
	2	480	10	0.24 A	0.95	1.98	97	1.4	6	-22/-30
	1	347	68	0.20 A	1.08	1.47	98	1.4	6	-22/-30
F58T8	1	480	69	0.15 A	1.08	1.45	95	1.4	6	-22/-30

Safety and performance

Product is compliant with material restriction requirements of RoHS UL Type 1 Outdoor UL Type HL FCC – CLASS A Non-Consumer ANSI-C62.41-1991 ANSI-C82.11-Cons 2002 ANSI-C62.41-2002 UL Class P UL Type CC UL 55C Ambient Approved CSA

High Temperature Rated: Suitable for high temperature applications No PCB's 70C max case temp 5 yr warranty or 90C max case temp 3 yr warranty

See page E-1 for warranty information.

*T5 lamp lengths are noted to nearest foot and are not exact lengths as noted in feet. See GE Lamp Catalog for exact lamp length.

T5 Watt-Miser Electronic Program / Rapid Start Ballast
T5 Electronic Programmed Start

62729 – GE254PS347-F

T5 High Output - UltraStart® Programmed Rapid Start

2 or 1 – F54T5HO 347V F Can LFL

- High Efficiency T5 ballast with Continuous Cathode Cutout Technology
- Lower Maintenance Costs with Parallel Lamp Operation
- Fast Starting Time <700ms
- Auto-Restart withstands temporary losses in power without the need to cycle power
- Anti-Striation Control for better light quality, with no striations.
- 90°C case rating/UL Approved 55C Ambient Rating
- Individual lamp End of Lamp Life protection - only one lamp shuts down at end of life
- Cold temperature -20°F Minimum Starting Temperature

General characteristics

Ballast Type	Electronic - Program / Rapid Start
Starting Method	Programmed Rapid Start
Lamp Wiring	Parallel
Line Voltage Regulation (+/-)	10%
Ambient Temperature (MAX)	55°C (131°F)
Case Temperature (MAX)	90°C (194°F)
Ballast Factor	Normal
Power Factor Correction	Active
Sound Rating	A (20-24 decibels)
Enclosure Type	Metal Can
Additional Info	Lamp End-of-Life Safety Shutdown Circuit/Auto-restart/ Anti-striation control

Electrical characteristics

Supply Current Frequency	50 Hz/60 Hz

Order information

10 Pack	Pallet Pack	DIY Pack	IP Pack
62729	.		

Dimensions

Wiring diagram – LFL 4a– see example on page 13-17	
Case dimensions – Ref Drawing -F Can – see page 13-19	
Length (L)	11.8 in (298 mm)
Width (W)	1.7 in (43 mm)
Height (H)	1.2 in (30 mm)
Mounting dimensions	
Mount Length (M)	11.1 in (282 mm)
Weight	2.15 lbs
Exit Type	Side
Remote Mounting Distance to Lamp	12 ft
Remote Mounting Wire Gauge	18 AWG
Lead lengths	**Length (± 1 in.)**
Black	25.0 in (635 mm)
Black/White	25.0 in (635 mm)
Blue	34.0 in (864 mm)
Red	34.0 in(864 mm)
Yellow	45.0 in (1143 mm)

Specifications by lamp and wattage

Lamp	# of Lamps	Line Volts	System Watts	Nom. Line Current	System Ballast Factor	Ballast Efficacy Factor	Power Factor% (>=)	Crest Factor (<=)	THD% (<=)	Min. Starting Temp (°F/°C)
	2	347	118	0.36 A	1.00	1.69	99	1.4	5	-22/-30
F54T5/HO	1	347	73	0.22 A	1.10	1.37	98	1.4	5	-22/-30
	2	347	113	0.33 A	1.06	1.77	99	1.4	5	0/-18
FT50W/2G11	1	347	69	0.20 A	1.18	1.45	98	1.4	5	0/-18
	2	347	113	0.33 A	1.00	1.77	99	1.4	5	-22/-30
F54T5/WM	1	347	69	0.20 A	1.12	1.45	98	1.4	6	-22/-30
	2	347	109	0.32 A	0.86	1.83	99	1.4	5	0/-18
FT55W/4P	1	347	68	0.20 A	1.03	1.47	98	1.4	6	0/-18
	2	347	107	0.31 A	1.00	1.87	99	1.4	5	0/-18
F54T5/49W	1	347	64	0.19 A	1.10	1.56	98	1.4	6	0/-18
	2	347	104	0.31 A	1.00	1.92	99	1.4	5	0/-18
F54T5/47W	1	347	63	0.19 A	1.10	1.59	98	1.4	6	0/-18
	2	347	101	0.33 A	0.95	1.98	99	1.4	5	-22/-30
F58T8	1	347	68	0.20 A	1.08	1.47	98	1.4	6	-22/-30

Safety and performance

Product is compliant with material restriction requirements of RoHS UL Type 1 Outdoor UL Type HL FCC – CLASS A Non-Consumer ANSI-C62.41-1991 ANSI-C82.11-Cons 2002 ANSI-C62.41-2002 UL Class P UL Type CC UL 55C Ambient Approved CSA

High Temperature Rated: Suitable for high temperature applications No PCB's 70C max case temp 5 yr warranty or 90C max case temp 3 yr warranty

See page E-1 for warranty information.

TT5 Watt-Miser Electronic Program / Rapid Start Ballast

T5 Electronic Programmed Start

62730 – GE454PS347/480-E

T5 High Output - UltraStart® Programmed Rapid Start

4-1 - F54T5HO 347 to 480V High Temperature E Can LFL

- High Efficiency T5 ballast with Continuous Cathode Cutout Technology
- Lower Maintenance Costs with Parallel Lamp Operation
- Fast Starting Time <700ms
- GE 3-Stage 3G Transient Suppression - Meets IEEE/ANSI C Low line to line transient capability up to 6KV
- Auto-Restart withstands temporary losses in power without the need to cycle power
- Anti-Striation Control for better light quality, with no striations.
- 90°C case rating/UL Approved 55C Ambient Rating
- Individual lamp End of Lamp Life protection - only one lamp shuts down at end of life
- Cold temperature -20°F Minimum Starting Temperature

General characteristics

Ballast Type	Electronic - Program / Rapid Start
Starting Method	Programmed Rapid Start
Lamp Wiring	Parallel
Line Voltage Regulation (+/-)	10%
Ambient Temperature (MAX)	55°C (131°F)
Case Temperature (MAX)	90°C (194°F)
Ballast Factor	Normal
Power Factor Correction	Active
Sound Rating	A (20-24 decibels)
Enclosure Type	Metal Can
Additional Info	Lamp End-of-Life Safety Shutdown Circuit/Auto-restart/ Anti-striation control

Electrical characteristics

Supply Current Frequency	50 Hz/60 Hz

Order information

8 Pack	Pallet Pack	DIY Pack	IP Pack
62730			

Dimensions

Wiring diagram – LFL 4a– see example on page 13-17	
Case dimensions – Ref Drawing -E Can – see page 13-19	
Length (L)	16.7 in (424 mm)
Width (W)	1.7 in (43 mm)
Height (H)	1.2 in (30 mm)
Mounting dimensions	
Mount Length (M)	16.1 in (408 mm)
Weight	2.5 lbs
Exit Type	Side
Remote Mounting Distance to Lamp	12 ft
Remote Mounting Wire Gauge	18 AWG
Lead lengths	**Length (± 1 in.)**
Black	25.0 in (635 mm)
White	25.0 in (635 mm)
Blue	34.0 in (864 mm)
Blue/White	34.0 in (864 mm)
Red	34.0 in (864 mm)
Red/White	34.0 in (864 mm)
Yellow	35.0 in (889 mm)

Specifications by lamp and wattage

Lamp	# of Lamps	Line Volts	System Watts	Nom. Line Current	System Ballast Factor	Ballast Efficacy Factor	Power Factor% (>=)	Crest Factor (<=)	THD% (<=)	Min. Starting Temp (°F/°C)
	4	347	229	0.68 A	1.00	1.75	99	1.4	5	-22/-30
	4	480	228	0.49 A	1.00	1.75	98	1.4	7	-22/-30
	3	347	176	0.53 A	1.01	1.70	99	1.4	5	-22/-30
	3	480	177	0.38 A	1.01	1.69	98	1.4	8	-22/-30
	2	347	125	0.37 A	0.96	1.60	99	1.4	7	-22/-30
	2	480	125	0.27 A	0.96	1.60	96	1.4	12	-22/-30
	1	347	68	0.21 A	1.12	1.47	94	1.4	16	-22/-30
F54T5/HO	1	480	69	0.18 A	1.12	1.45	81	1.4	35	-22/-30
	4	347	227	0.68 A	1.06	1.76	99	1.4	5	0/-18
	4	480	226	0.49 A	1.06	1.77	98	1.4	7	0/-18
	3	347	177	0.53 A	1.11	1.69	99	1.4	5	0/-18
	3	480	177	0.38 A	1.11	1.69	98	1.4	8	0/-18
	2	347	126	0.37 A		1.59	99	1.4	6	0/-18
	2	480	126	0.28 A		1.59	96	1.4	12	0/-18
	1	347	69	0.22 A		1.47	94	1.4	16	0/-18
FT50W/4P	1	480	69	0.19 A		1.45	80	1.4	34	0/-18
	4	347	221	0.66 A	0.86	1.81	99	1.4	5	0/-18
	4	480	220	0.47 A	0.86	1.82	98	1.4	7	0/-18
	3	347	173	0.51 A	0.91	1.73	99	1.4	5	0/-18
	3	480	173	0.37 A	0.91	1.73	98	1.4	8	0/-18
	2	347	123	0.37 A		1.63	99	1.4	7	0/-18
	2	480		0.27 A	1.24	1.61	96	1.4	12	0/-18
	1	347	68	0.22 A		1.47	92	1.4	19	0/-18
FT55W/4P	1	480	69	0.19 A		1.45	77	1.4	40	0/-18
	4	347	219	0.65 A	1.00	1.83	99	1.4	5	0/-18
	4	480	218	0.47 A	1.00	1.83	98	1.4	7	0/-18
	3	347	171	0.51 A	1.01	1.75	99	1.4	5	0/-18
	3	480	171	0.37 A	1.01	1.75	98	1.4	8	0/-18
	2	347	121	0.36 A	0.96	1.65	99	1.4	6	0/-18
	2	480	122	0.27 A	0.96	1.64	96	1.4	12	0/-18
	1	347	66	0.21 A	1.12	1.52	94	1.4	14	0/-18
F54T5/WM	1	480	67	0.17 A	1.12	1.49	82	1.4	37	0/-18
	4	347	209	0.62 A	0.95	1.91	99	1.4	5	-22/-30
	4	480	208	0.45 A	0.95	1.92	98	1.4	7	-22/-30
	3	347	164	0.49 A	0.99	1.83	99	1.4	5	-22/-30
	3	480	165	0.36 A	0.99	1.82	97	1.4	8	-22/-30
	2	347	117	0.35 A	0.96	1.71	99	1.4	6	-22/-30
	2	480	118	0.26 A	0.96	1.69	96	1.4	12	-22/-30
	1	347	65	0.20 A	1.12	1.54	97	1.4	9	-22/-30
F58T8	1	480	66	0.15 A	1.12	1.52	91	1.4	16	-22/-30
	4	347	206	0.63 A	1.00	1.94	99	1.4	5	0/-18
	4	480	205	0.44 A	1.00	1.95	98	1.4	7	0/-18
	3	347	161	0.48 A	1.04	1.86	99	1.4	5	0/-18
	3	480	162	0.35 A	1.04	1.85	97	1.4	8	0/-18
	2	347	117	0.35 A	1.06	1.71	99	1.4	6	0/-18
	2	480	118	0.26 A	1.06	1.69	96	1.4	12	0/-18
	1	347	65	0.20 A	1.08	1.54	97	1.4	10	0/-18
F54T5/47W	1	480	66	0.15 A	1.08	1.52	90	1.4	18	0/-18

Safety and performance

Product is compliant with material restriction requirements of RoHS UL Type 1 Outdoor UL Type HL FCC – CLASS A Non-Consumer ANSI-C62.41-1991 ANSI-C82.11-Cons 2002 ANSI-C62.41-2002 UL Class P UL Type CC UL 55C Ambient Approved

High Temperature Rated: Suitable for high temperature applications No PCB's

See page E-1 for warranty information.

*T5 lamp lengths are noted to nearest foot and are not exact lengths as noted in feet. See GE Lamp Catalog for exact lamp length.

T5 Watt-Miser Electronic Program / Rapid Start Ballast
T5 Electronic Programmed Start

62731 – GE454PS347-E

T5 High Output - UltraStart® Programmed Rapid Start

4-1 - F54T5HO 347V LFL E Can

- High Efficiency T5 ballast with Continuous Cathode Cutout Technology
- Lower Maintenance Costs with Parallel Lamp Operation
- Fast Starting Time <700ms
- Auto-Restart withstands temporary losses in power without the need to cycle power
- Anti-Striation Control for better light quality, with no striations.
- 90°C case rating/UL Approved 55C Ambient Rating
- Individual lamp End of Lamp Life protection - only one lamp shuts down at end of life
- Cold temperature -20°F Minimum Starting Temperature

General characteristics

Ballast Type	Electronic - Program / Rapid Start
Starting Method	Programmed Rapid Start
Lamp Wiring	Parallel
Line Voltage Regulation (+/-)	10%
Ambient Temperature (MAX)	
Case Temperature (MAX)	70°C (158°F)
Ballast Factor	Normal
Power Factor Correction	Active
Sound Rating	A (20-24 decibels)
Enclosure Type	Metal Can
Additional Info	Lamp End-of-Life Safety Shutdown Circuit/Auto-restart/ Anti-striation control

Electrical characteristics

Supply Current Frequency	50 Hz/60 Hz

Order information

8 Pack	Pallet Pack	DIY Pack	IP Pack
62731			

Dimensions

Wiring diagram – LFL 4b– see example on page 13-17	
Case dimensions – Ref Drawing -E Can – see page 13-19	
Length (L)	16.7 in (424 mm)
Width (W)	1.7 in (43 mm)
Height (H)	1.2 in (30 mm)
Mounting dimensions	
Mount Length (M)	16.1 in (409 mm)
Weight	2.5 lbs
Exit Type	Side
Remote Mounting Distance to Lamp	12 ft
Remote Mounting Wire Gauge	18 AWG
Lead lengths	**Length (± 1 in.)**
Black	25.0 in (635 mm)
White	25.0 in (635 mm)
Blue	34.0 in (864 mm)
Blue/White	34.0 in (864 mm)
Red	34.0 in (864 mm)
Red/White	34.0 in (864 mm)
Yellow	35.0 in (889 mm)

Specifications by lamp and wattage

Lamp	# of Lamps	Line Volts	System Watts	Nom. Line Current	System Ballast Factor	Ballast Efficacy Factor	Power Factor% (>=)	Crest Factor (<=)	THD% (<=)	Min. Starting Temp (°F/°C)
	4	347	229	0.68 A	1.00	1.75	99	1.4	5	-22/-30
	3	347	176	0.53 A	1.01	1.70	99	1.4	5	-22/-30
	2	347	125	0.37 A	0.96	1.60	99	1.4	7	-22/-30
F54T5/HO	1	347	68	0.21 A	1.12	1.47	94	1.4	16	-22/-30
	4	347	227	0.68 A	1.06	1.76	99	1.4	5	0/-18
	3	347	177	0.53 A	1.11	1.69	99	1.4	5	0/-18
	2	347	126	0.37 A		1.59	99	1.4	6	0/-18
FT50W/4P	1	347	69	0.22 A		1.47	94	1.4	16	0/-18
	4	347	221	0.66 A	0.86	1.81	99	1.4	5	0/-18
	3	347	173	0.51 A	0.91	1.73	99	1.4	5	0/-18
	2	347	123	0.37 A		1.63	99	1.4	7	0/-18
FT55W/4P	1	347	68	0.22 A		1.47	92	1.4	19	0/-18
	4	347	219	0.65 A	1.00	1.83	99	1.4	5	0/-18
	3	347	171	0.51 A	1.01	1.75	99	1.4	5	0/-18
	2	347	121	0.36 A	0.96	1.65	99	1.4	6	0/-18
F54T5/WM	1	347	66	0.21 A	1.12	1.52	94	1.4	14	0/-18
	4	347	209	0.62 A	0.95	1.91	99	1.4	5	-22/-30
	3	347	164	0.49 A	0.99	1.83	99	1.4	5	-22/-30
	2	347	117	0.35 A	0.96	1.71	99	1.4	6	-22/-30
F58T8	1	347	65	0.20 A	1.12	1.54	97	1.4	9	-22/-30
	4	347	206	0.63 A	1.00	1.94	99	1.4	5	0/-18
	3	347	161	0.48 A	1.04	1.86	99	1.4	5	0/-18
	2	347	117	0.35 A	1.06	1.71	99	1.4	6	0/-18
F54T5/47W	1	347	65	0.20 A	1.08	1.54	97	1.4	10	0/-18

Safety and performance

Product is compliant with material restriction requirements of RoHS UL Type 1 Outdoor UL Type HL FCC – CLASS A Non-Consumer ANSI-C62.41-1991 ANSI-C82.11-Cons 2002 ANSI-C62.41-2002 UL Class P UL Type CC UL 55C Ambient Approved

High Temperature Rated: Suitable for high temperature applications No PCB's 70C max case temp 5 yr warranty or 90C max case temp 3 yr warranty

See page E-1 for warranty information.

Step Down Transformers
T5 Electronic Programmed Start Ballasts

74119 – GETR480/277-250W

Step Down Transformers

Non-Isolated Autotransformer 480 to 277V, <250 Watts (VA), A Can

- Precision-wound coils, ensuring even heat dissipation and the highest electrical integrity.
- Non-Isolated Autotransformer designed specifically for lighting applications to step down 480V to 277V
- For use with one or more electronic 277V or universal voltage ballasts within max total system power of autotransformer
- 480Vrms Input, 60Hz Only, 277Vrms Full Load Output or 347Vrms Input
- For loads with total system power <250VA
- Internal Auto Reset Thermal Protector Rated 100C
- For use on single phase or ground referred systems
- Five Year Limited Warranty
- 93% electrical efficiency

General characteristics

Ballast Type	Magnetic - Core & Coil
Case Temperature (MAX)	100°C (212°F)
Sound Rating	A (20-24 decibels)
Enclosure Type	Metal
Additional Info	Thermally protected

Electrical characteristics

Supply Current Frequency	60 Hz
Supply Current Frequency (MIN)	60 Hz

Order information

10 Pack	Pallet Pack	DIY Pack	IP Pack
74119			

Specifications by lamp and wattage

Line Volts
480V to 277V
347V to 200V

Dimensions

Wiring diagram – TR1 – see example on page 13-18	
Case dimensions – Ref Drawing -A Can – see page 13-19	
Length (L)	9.5 in (241 mm)
Width (W)	1.7 in (43 mm)
Height (H)	1.18 in (30 mm)
Mounting dimensions	
Mount Length (M)	8.9 in (226 mm)
Mount Width (X or F)	1.18 in (30 mm)
Mount Slots (MS)	0.3 in (8 mm)
Exit Type	Side
Remote Mounting Wire Gauge	14 AWG
Lead lengths	**Length (± 1 in.)**
Black	14.0 in (356 mm)
Blue	14.0 in (356 mm)
Red	14.0 in (356 mm)

Safety and performance UL Type 1 Outdoor UL Listed UL Listed Autotransformer cUL

74120 – GETR480/277-375W

Step Down Transformers

Non-Isolated Autotransformer 480 to 277V, <375 Watts (VA), F Can

- Precision-wound coils, ensuring even heat dissipation and the highest electrical integrity.
- Non-Isolated Autotransformer designed specifically for lighting applications to step down 480V to 277V
- For use with one or more electronic 277V or universal voltage ballasts within max total system power of autotransformer
- 480Vrms Input, 60Hz Only, 277Vrms Full Load Output or 347Vrms Input
- For loads with total system power <375VA
- Internal Auto Reset Thermal Protector Rated 100C
- For use on single phase or ground referred systems
- Five Year Limited Warranty
- 93% electrical efficiency

General characteristics

Ballast Type	Magnetic - Core & Coil
Case Temperature (MAX)	100°C (212°F)
Sound Rating	A (20-24 decibels)
Enclosure Type	Metal
Additional Info	Thermally protected

Electrical characteristics

Supply Current Frequency	60 Hz
Supply Current Frequency (MIN)	60 Hz

Order information

10 Pack	Pallet Pack	DIY Pack	IP Pack
74120			

Specifications by lamp and wattage

Line Volts
480V to 277V
347V to 200V

Dimensions

Wiring diagram – TR1 – see example on page 13-18	
Case dimensions – Ref Drawing -F Can – see page 13-19	
Length (L)	11.75 in (299 mm)
Width (W)	1.7 in (43 mm)
Height (H	1.18 in (30 mm)
Mounting dimensions	
Mount Length (M)	11.1 in (283 mm)
Mount Slots (MS)	0.3 in (8 mm)
Exit Type	Side
Remote Mounting Wire Gauge	14 AWG
Lead lengths	**Length (± 1 in.)**
Black	14.0 in (356 mm)
Blue	14.0 in (356 mm)
Red	14.0 in (356 mm)

Safety and performance UL Type 1 Outdoor UL Listed cUL

See page E-1 for warranty information.

*T5 lamp lengths are noted to nearest foot and are not exact lengths as noted in feet. See GE Lamp Catalog for exact lamp length.

85857 - GETR277/120-175W

Step Down Transformers

Non-Isolated Autotransformer 277 to 120V, <175 Watts (VA), A Can

- Precision-wound coils, ensuring even heat dissipation and the highest electrical integrity.
- Non-Isolated Autotransformer designed specifically for lighting applications to step down 277V to 120V.
- For use with one or more electronic 120V or universal voltage ballasts within max total system power of autotransformer.
- 277Vrms Input, 60Hz Only, 120Vrms Full Load Output
- For loads with total system power <175VA
- Internal Auto Reset Thermal Protector Rated 100°C
- For use on single phase
- Five Year Limited Warranty
- 93% electrical efficiency

General characteristics

Ballast Type	Magnetic - Core & Coil
Case Temperature (MAX)	100°C (212°F)
Sound Rating	A (20-24 decibels)
Enclosure Type	Metal
Additional Info	Thermally protected

Electrical characteristics

Supply Current Frequency	60 Hz
Supply Current Frequency (MIN)	60 Hz

Order information

6 Pack	Pallet Pack	DIY Pack	IP Pack
85857			

Specifications by lamp and wattage

Lamp	# of Lamps	Line Volts
F54T5/HO	1	277
F32T8	1	277

Dimensions

Wiring diagram – TR1 – see example on page 13-18	
Case dimensions – Ref Drawing -A Can – see page 13-19	
Length (L)	9.5 in (241 mm)
Width (W)	1.7 in (43 mm)
Height (H)	1.2 in (30.5 mm)
Mounting dimensions	
Mount Length (M)	8.9 in (226 mm)
Mount Width (X or F)	1.1 in (29 mm)
Mount Slots (MS)	0.3 in (8 mm)
Exit Type	Side
Remote Mounting Wire Gauge	14 AWG
Lead lengths	**Length (± 1 in.)**
Black	14.0 in (356 mm)
Blue	14.0 in (356 mm)
Red	14.0 in (356 mm)

Safety and performance UL Environmental Type 1 Enclosure UL Listed UL Listed Autotransformer

90896 - GETR347/277-375W

Step Down Transformers

Non-Isolated Autotransformer 347 to 277V, <375 Watts (VA), F Can

- Precision-wound coils, ensuring even heat dissipation and the highest electrical integrity.
- Non-Isolated Autotransformer designed specifically for lighting applications to step down 347V to 277V.
- For use with one or more electronic 277V or universal voltage ballasts within max total system power of autotransformer.
- 347Vrms Input, 60Hz Only, 277Vrms Full Load Output
- For loads with total system power <375VA
- Internal Auto Reset Thermal Protector Rated 100°C
- For use on single phase
- Five Year Limited Warranty
- 93% electrical efficiency

General characteristics

Ballast Type	Magnetic - Core & Coil
Case Temperature (MAX)	100°C (212°F)
Sound Rating	A (20-24 decibels)
Enclosure Type	Metal
Additional Info	Thermally protected

Electrical characteristics

Supply Current Frequency	60 Hz
Supply Current Frequency (MIN)	60 Hz

Order information

6 Pack	Pallet Pack	DIY Pack	IP Pack
90896			

Specifications by lamp and wattage

Lamp	# of Lamps	Line Volts
F54T5/HO	1	347
F32T8	1	347

Dimensions

Wiring diagram – TR1 – see example on page 13-18	
Case dimensions – Ref Drawing -F Can – see page 13-19	
Length (L)	11.8 in (298.5 mm)
Width (W)	1.7 in (43 mm)
Height (H)	1.2 in (30.5 mm)
Mounting dimensions	
Mount Length (M)	11.1 in (283 mm)
Mount Width (X or F)	
Mount Slots (MS)	0.2 in (6 mm)
Exit Type	Side
Remote Mounting Wire Gauge	14 AWG
Lead lengths	**Length (± 1 in.)**
Black	14.0 in (356 mm)
Blue	14.0 in (356 mm)
Red	14.0 in (356 mm)

Safety and performance UL Environmental Type 1 Enclosure UL Listed UL Listed Autotransformer

Wiring Diagrams
T5 Electronic Programmed Start Ballasts

LFL 4a

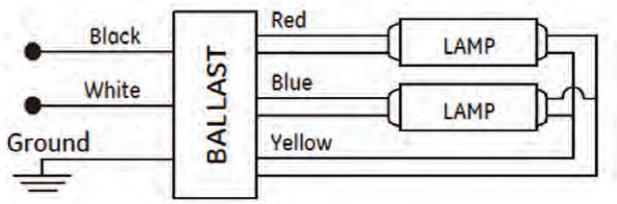

LFL 4b

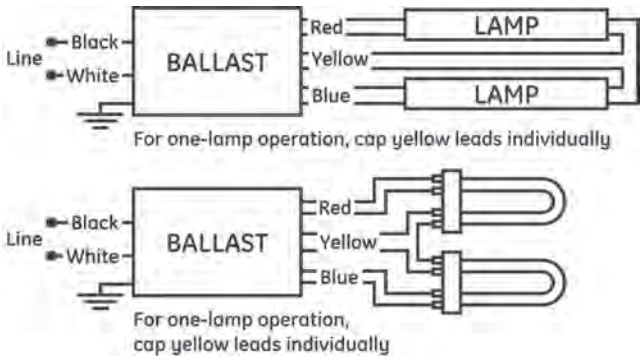

LFL 4c

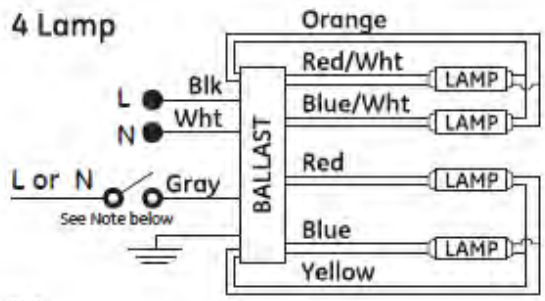

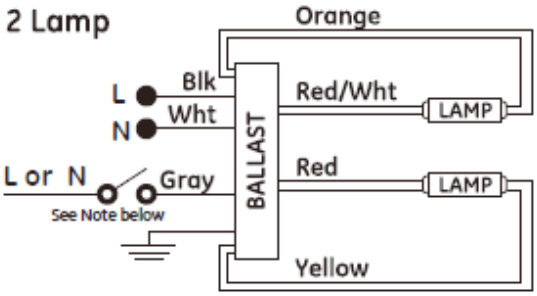

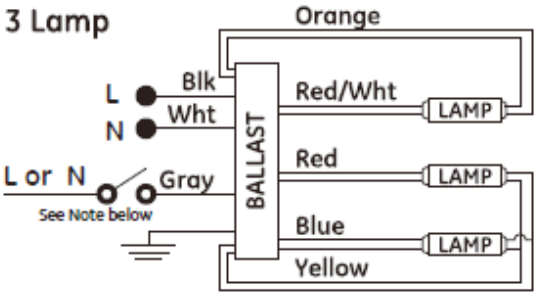

T51

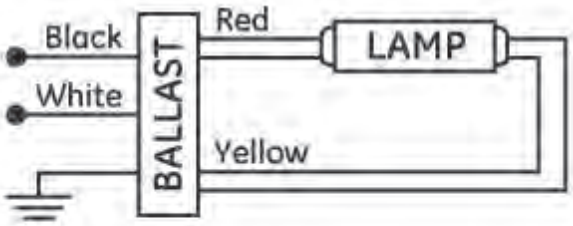

For one lamp operation cap the blue leads individually

Note:
Connect gray wire to line or neutral for full output with all lamps on. Leave gray wire open for dimmed output, only lamps connected to Red-White and Blue-White will be operated. Use dry contact switch or relay for high/low control.

*T5 lamp lengths are noted to nearest foot and are not exact lengths as noted in feet. See GE Lamp Catalog for exact lamp length.

LFL PS1b

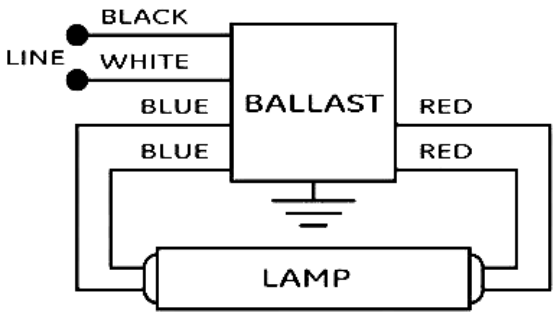

TR1

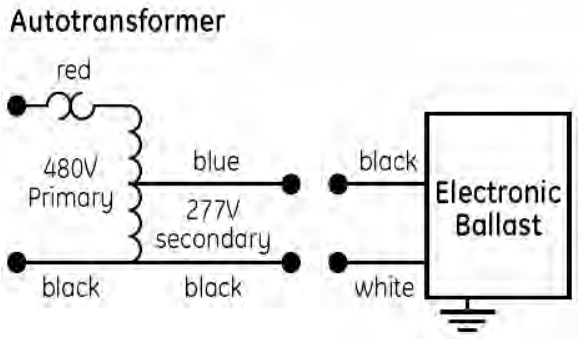

Grounded 277V, 347V or 480V systems only

LFL PS4

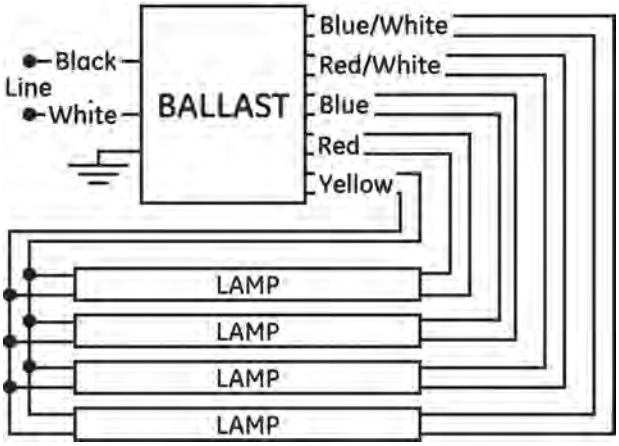

LFL 2a

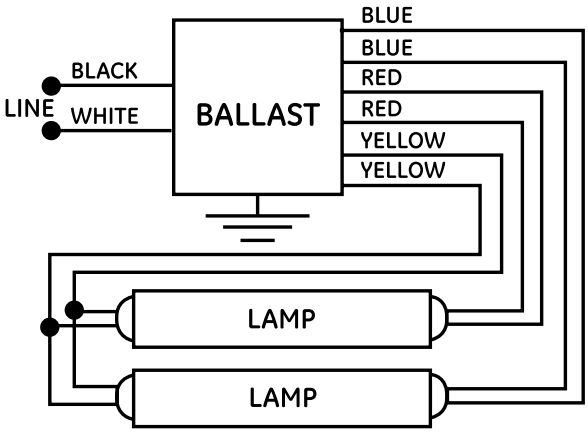

LFL 1a

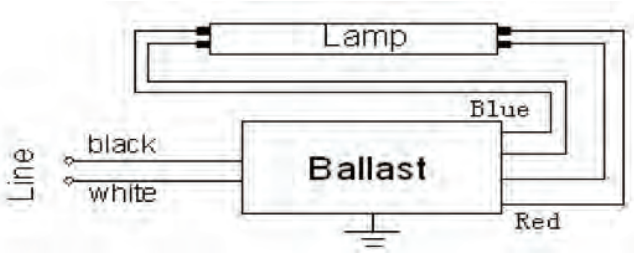

LFL 1b

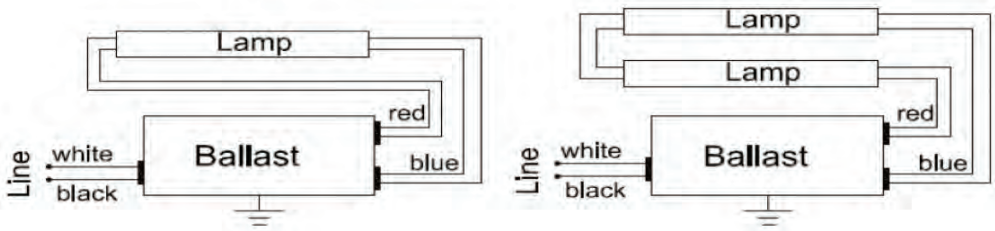

See page E-1 for warranty information.

Case Dimensions
T5 Electronic Programmed Start Ballasts

-A Can, -E, -F, -G

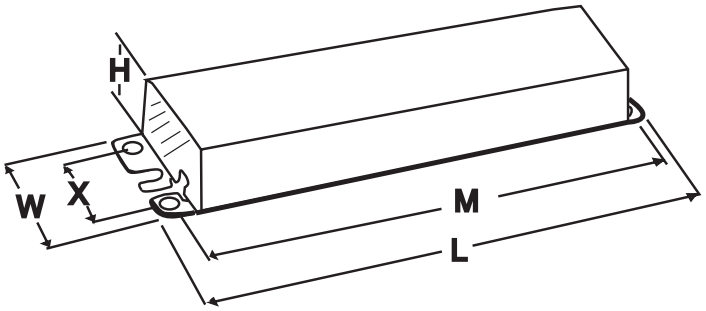

-C Can

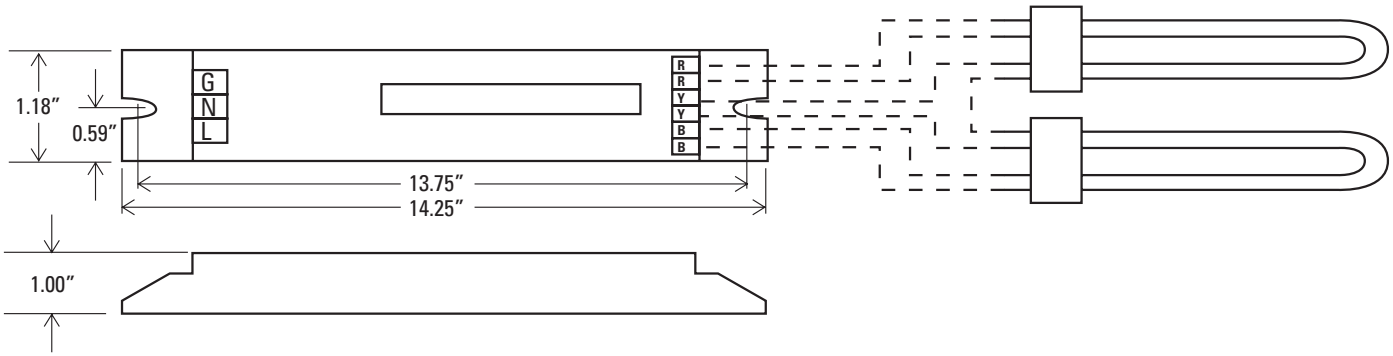

-D Can

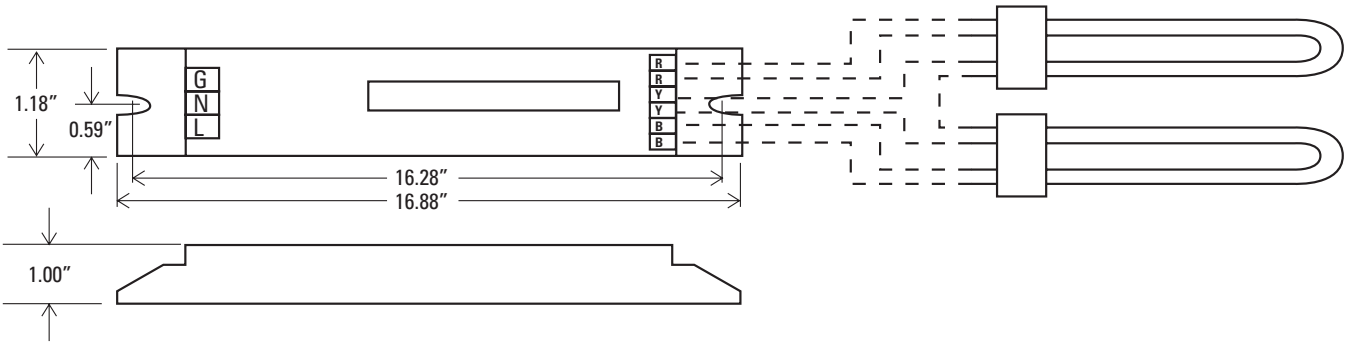

-J

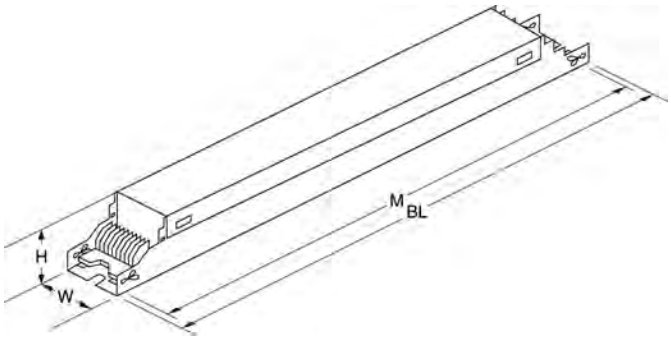

See page E-1 for warranty information.

*T5 lamp lengths are noted to nearest foot and are not exact lengths as noted in feet. See GE Lamp Catalog for exact lamp length.

Notes

See page E-1 for warranty information.

Table of Contents
T12 Electronic and High Output Ballasts

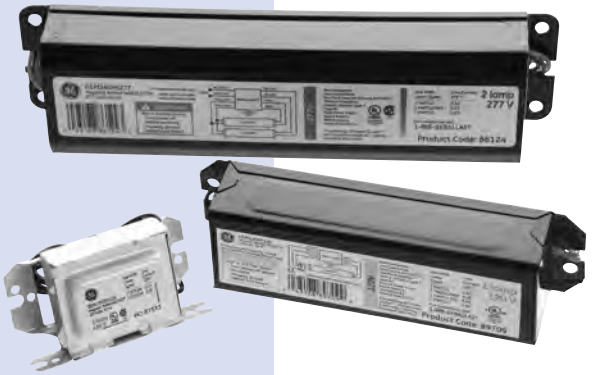

Understanding T12 Electronic Ballasts

Electronic T12

GE multivolt and dedicated voltage ProLine® T12 high-performance ballasts are designed for replacement of magnetic T12 electronic ballasts during maintenance or retrofits. GE multivolt ProLine® T12 ballasts have the same wiring and mounting requirements as standard magnetic ballasts and provide up to 20% energy savings by simply replacing the ballast.

The DOE ballast ruling effective April 1, 2005, prevents the sale of 4 foot and 8 foot lamp electromagnetic ballasts that operate T12 lamps and do not meet federal ballast efficiency requirements. GE ProLine® T12 electronic ballasts meet the DOE minimum ballast efficiency requirements and also allow facility managers to reduce ballast maintenance inventories by consolidating the number of ballasts needed. GE ProLine® T12 ballasts operate both energy-saving and standard wattage lamps and are also multi-voltage (120-277V). With 2 ballasts, the multi-voltage ProLine® T12 can consolidate over 40 different magnetic ballasts.

Performance Features

- GE240RSMVN and GE240RS120 comply with FCC for residential use
- Low-profile and lightweight housing simplifies installation and reduces transportation costs (GE240 = 1.3 lbs. lighter than magnetic; GE260 = 5.3 lbs. lighter than magnetic)
- Parallel operation — if one lamp fails, others remain lit
- Significantly quieter than magnetic
- High-frequency operation virtually eliminates lamp flickering typical in T12 electromagnetic systems
- Five-year limited ballast warranty

Electromagnetic T12

- Complete line of ballasts for 2-to-8 foot lamps, circleline and high-output lamps
- 100% thermally protected
- High-grade lamination steel assures lowest wattage loss
- UL, CSA and/or cUL approved
- 888-GEBALLAST on every ballast
- Two-year limited ballast warranty

Color-Coded Ballast and Outer Box Labels

120V – Yellow
277V – Red

Packaging

- Standard 10 packs
- IP Packs – individually packed with instructions
- DIY – shrink-wrapped and tray-packed with instructions

GE Ballast LFL magnetic nomenclature

G E M - 2 3 2 - H O - R S - 1 2 0 - D I Y

GE Ballast
M = Electromagnetic Ballast
GEH = HID

Maximum number of lamps supported by this ballast: 1, 2, 3, 4

Lamp Watts
(Primary Lamp)
T8 = 32 – 4 foot, 59 – 8 foot
T12 = 40 – 4 foot, 60 – 8 foot
T12 Electronic =
40 – 2-4 foot, 2 pin
60 – 4-8 foot, 1 pin
96 – 4-8 foot HO, 2 pin
T12 Magnetic =
40 – 2-4 foot, 2 pin
96 – 4-8 foot, 2 pin

IS = Instant Start, default if not shown
RS = Rapid Start
PH = Preheat
PT= Preheat/Trigger
H = Hybrid
D50 = Dimming (min level)

HO = High Output
VHO = Very High Output

120V – Yellow
277V – Red
220V – Green
240V – Orange
347 – Gray

Pack Type
IP = Individual corrugated box per ballast
84T = Pallet bulk pack (84=840, 42=420 ballasts)
DIY = Shrinkwrap ballast in tray pack
DIY72 = Shrinkwrap ballast in pallet pack (Qty)
No extension = 10 pack

See page E-1 for warranty information.

ProLine® T12

T12 Electronic and High Output Ballasts For F20 (2 ft), F30 (3 ft), F34/F40 (4 ft) T12 Lamps

74472 – GE240PS-MV-N (replaces 24107)

ProLine® T12 Multivolt 120V – 277V

2 or 1 – F40 or F34T12 Rapid Start 120 to 277 "N" BF ProLine® T12

- High-performance electronic ballast for all general fluorescent applications
- Multi-voltage technology handles voltage from 120 to 277V
- Light weight, low-profile housing
- Parallel lamp operation means system maintenance is easier to manage

General characteristics

Ballast Type	Electronic – Programmed/ Rapid Start
Starting Method	Rapid start
Lamp Wiring	Parallel
Line Voltage Regulation (+/-)	10%
Ambient Temperature (MAX)	
Case Temperature (MAX)	70°C (158°F)
Ballast Factor	Normal
Power Factor Correction	Active
Sound Rating	A (20-24 decibels)
Enclosure Type	Metal
Additional Info	Auto-restart, Thermally protected

Electrical characteristics

Supply Current Frequency	60 Hz

Order information

Std. pack	Pallet Pack	DIY Pack	IP Pack
74472		74473 (replaces 24773)	

Dimensions

Wiring diagram – LFL PS2 – see example on page 14-6	
Case dimensions – Ref Drawing B1 – see page 14-7	
Length (L)	9.5 in (241 mm)
Width (W)	1.3 in (33 mm)
Height (H)	1.2 in (30 mm)
Mounting dimensions	
Mount Length (M)	8.9 in (226 mm)
Mount Width (X or F)	1.1 in (28 mm)
Mount Slots (MS)	0.3 in (8 mm)
Weight	1.06 lbs
Exit Type	Side
Remote mounting distance to lamp	18 ft
Remote Mounting Wire Gauge	18 AWG
Lead lengths	**Length (± 1 in.)**
Yellow	48.0 in (1219 mm)
Blue	33.0 in (838 mm)
Red	33.0 in (838 mm)
Black	25.0 in (635 mm)
White	25.0 in (635 mm)

Specifications by lamp and wattage

Lamp	# of Lamps	Line Volts	System Watts	Nom. Line Current	System Ballast Factor	Ballast Efficacy Factor	Power Factor% (>=)	Crest Factor (<=)	THD% (<=)	Min. Starting Temp (°F/°C)
	2	120	74	0.67 A	0.89	1.20	99	1.7	6	50/10
	2	277	73	0.30 A	0.89	1.22	97	1.7	10	50/10
	1	120	48	0.41 A			99	1.7	7	50/10
F40T12	1	277	48	0.19 A			95	1.7	10	50/10
	2	120	75	0.63 A	0.88	1.17	99	1.7	7	50/10
	2	277	72	0.27 A	0.88	1.22	94	1.7	16	50/10
	1	120	42	0.35 A			99	1.7	10	50/10
F40T10	1	277	42	0.17 A			88	1.7	16	50/10
	2	120	63	0.56 A	0.87	1.38	99	1.7	7	50/10
	2	277	62	0.26 A	0.87	1.40	96	1.7	10	50/10
	1	120	41	0.35 A			99	1.7	8	50/10
F34T12	1	277	41	0.17 A			94	1.7	11	50/10
	2	120	50	0.42 A	0.95	1.90	99	1.7	9	50/10
	2	277	50	0.20 A	0.95	1.90	91	1.7	18	50/10
	1	120	30	0.26 A			99	1.7	12	50/10
F30T12/WM	1	277	30	0.13 A			82	1.7	27	50/10
	2	120	60	0.31 A	0.95	1.58	99	1.7	7	50/10
	2	277	58	0.22 A	0.95	1.64	96	1.7	10	50/10
	1	120	37	0.31 A			99	1.7	8	50/10
F30T12	1	277	37	0.16 A			94	1.7	11	50/10
	2	120	46	0.39 A	1.00	2.17	99	1.7	8	50/10
	2	277	45	0.18 A	1.00	2.22	94	1.7	11	50/10
	1	120	28	0.24 A			99	1.7	9	50/10
F20T12	1	277	29	0.13 A			92	1.7	17	50/10

Safety and performance

UL Type 1 Outdoor UL Type HL UL Class P NRCan FCC Part 18 Class B at 120 volts cUL Listed UL Listed

Product is compliant with material restriction requirements of RoHS

74474 – GE-260IS-MV-N (replaces 24108)

ProLine® T12 Multivolt 120V – 277V

2 or 1 – F96T12 Instant Start 120 to 277

- High-performance electronic ballasts for all general fluorescent applications
- Instant start electronic ballast for long lamp starting cycles and low initial cost
- Multi-voltage technology handles voltage from 120 to 277V
- Lightweight, low-profile housing
- Parallel lamp operation means system maintenance is easier to manage

General characteristics

Ballast Type	Electronic - Multivolt Instant Start
Starting Method	Instant start
Lamp Wiring	Parallel
Line Voltage Regulation (+/-)	10 %
Ambient Temperature (MAX)	
Case Temperature (MAX)	70 °C (158 °F)
Ballast Factor	Normal
Power Factor Correction	Active
Sound Rating	A (20-24 decibels)
Enclosure Type	Metal
Additional Info	Auto-restart, Thermally protected

Electrical characteristics

Supply Current Frequency	50Hz/60 Hz

Order information

10 Pack	Pallet Pack	DIY Pack	IP Pack
74474		74475 (replaces 24776)	

Dimensions

Wiring diagram – LFL 14 – see example on page 14-6	
Case dimensions – Ref Drawing B1 – see page 14-7	
Length (L)	9.5 in (241 mm)
Width (W)	1.7 in (43 mm)
Height (H)	1.2 in (30 mm)
Mounting dimensions	
Mount Length (M)	8.9 in (226 mm)
Mount Width (X or F)	1.1 in (29 mm)
Mount Slots (MS)	0.3 in (8 mm)
Weight	2.40 lbs
Exit Type	Side
Remote Mounting Distance to Lamp	18 ft
Remote Mounting Wire Gauge	18 AWG
Lead lengths	**Length (± 1 in.)**
Black	25.0 in (635 mm)
White	25.0 in (635 mm)
Red	59.0 in (1499 mm)
Blue	67.0 in (1702 mm)

Specifications by lamp and wattage

Lamp	# of Lamps	Line Volts	System Watts	Nom. Line Current	System Ballast Factor	Ballast Efficacy Factor	Power Factor % (>=)	Crest Factor (<=)	THD% (<=)	Min. Starting Temp (°F/°C)
	2	120	107	0.94 A	0.88	0.82	99	1.7	8	60/16
	2	277	106	0.40 A	0.88	0.83	96	1.7	10	60/16
	1	120	68	0.60 A	1.00	1.47	99	1.7	10	60/16
F96T12/WMP	1	277	68	0.27 A	1.00	1.47	95	1.7	12	60/16
	2	120	112	0.98 A	0.90	0.80	99	1.7	8	60/16
	2	277	110	0.42 A	0.90	0.82	97	1.7	10	60/16
	1	120	72	0.63 A	1.00	1.39	99	1.7	10	60/16
F96T12/WM	1	277	71	0.28 A	1.00	1.41	95	1.7	12	60/16
	2	120	141	1.24 A	0.90	0.64	99	1.7	8	0/-18
	2	277	138	0.53 A	0.90	0.65	98	1.7	10	0/-18
	1	120	90	0.79 A	1.02	1.13	99	1.7	10	0/-18
F96T12	1	277	89	0.34 A	1.02	1.15	96	1.7	12	0/-18
	2	120	125	1.10 A	0.90	0.72	99	1.7	8	0/-18
	2	277	123	0.47 A	0.90	0.73	97	1.7	10	0/-18
	1	120	80	0.70 A	1.04	1.30	99	1.7	10	0/-18
F84T12	1	277	79	0.30 A	1.04	1.32	96	1.7	12	0/-18
	2	120	107	0.94 A	0.90	0.84	99	1.7	8	0/-18
	2	277	106	0.40 A	0.90	0.85	97	1.7	10	0/-18
	1	120	69	0.60 A	1.04	1.51	99	1.7	10	0/-18
F72T12	1	277	69	0.27 A	1.04	1.51	95	1.7	12	0/-18
	2	120	97	0.86 A	0.90	0.93	99	1.7	8	0/-18
	2	277	96	0.37 A	0.90	0.94	97	1.7	10	0/-18
	1	120	63	0.55 A	1.08	1.71	99	1.7	10	0/-18
F64T12	1	277	63	0.25 A	1.08	1.71	95	1.7	12	0/-18
	2	120	92	0.81 A	0.90	0.98	99	1.7	8	0/-18
	2	277	91	0.35 A	0.90	0.99	96	1.7	10	0/-18
	1	120	60	0.53 A	1.08	1.80	99	1.7	10	0/-18
F60T12	1	277	60	0.28 A	1.08	1.80	94	1.7	12	0/-18
	2	120	73	0.65 A	0.90	1.23	99	1.7	8	0/-18
	2	277	73	0.29 A	0.90	1.23	95	1.7	10	0/-18
	1	120	49	0.43 A	1.10	2.24	99	1.7	10	0/-18
F48T12	1	277	48	0.20 A	1.10	2.29	89	1.7	12	0/-18

Safety and performance

UL Type 1 Outdoor NRCan UL Type HL FCC – CLASS A Non-Consumer UL Class P cUL Listed UL Listed

Product is compliant with material restriction requirements of RoHS

See page E-1 for warranty information.

T12 High Output
T12 Electronic and High Output Ballasts

35727 – GE296HO-MVPS-N

T12 High Output ProLine® T12 Multivolt 120V – 277V

2 or 1 – F96T12 HO RS 120 to 277 Multivolt ProLine®

General characteristics

Ballast Type	Electronic – Programmed/ Rapid Start
Starting Method	Rapid start
Lamp Wiring	Series
Line Voltage Regulation (+/-)	10%
Ambient Temperature (MAX)	105°F (41°C)
Case Temperature (MAX)	75°C (167°F)
Ballast Factor	Normal
Power Factor Correction	Active
Sound Rating	A (20-24 decibels)
Additional Info	Auto-restart, Thermally protected

Electrical characteristics

Supply Current Frequency	50 Hz/60 Hz

Order information

Std. pack	Pallet Pack	DIY Pack	IP Pack
35727		72109	

Dimensions

Wiring diagram – LFL PS2 – see example on page 14-6	
Case dimensions – Ref Drawing SL – see page 14-7	
Length (L)	11.75 in (299 mm)
Width (W)	2.15 in (55 mm)
Height (H)	1.61 in (41 mm)
Mounting dimensions	
Mount Length (M)	11.0 in (279 mm)
Mount Width (X or F)	2.15 in (55 mm)
Mount Slots (MS)	
Weight	
Exit Type	Side
Remote Mounting Distance to Lamp*	
Remote Mounting Wire Gauge	

* See gelighting.com for wire lengths. Different for 10 pg vs. DIY pack.

Specifications by lamp and wattage

Lamp	# of Lamps	Line Volts	System Watts	Nom. Line Current	System Ballast Factor	Ballast Efficacy Factor	Power Factor % (>=)	Crest Factor (<=)	THD% (<=)	Min. Starting Temp (°F/°C)
F96T12/HO/	2	120	164	1.38 A	0.90	0.55	99	1.7	10	60/16
WM	2	277	164	0.62 A	0.90	0.55	99	1.7	10	60/16
	2	120	196	1.65 A	0.90	0.46	99	1.7	10	-20/-29
	2	277	196	0.73 A	0.90	0.46	97	1.7	10	-20/-29
	1	120	104	0.88 A	0.92	0.88	99	1.7	15	-20/-29
F96T12/HO	1	277	104	0.42 A	0.92	0.88	95	1.7	15	-20/-29
	2	120	154	1.30 A	0.90	0.58	99	1.7	10	-20/-29
F72T12/HO	2	277	154	0.57 A	0.90	0.58	96	1.7	10	-20/-29
	2	120	120	1.17 A	0.90	0.75	99	1.7	10	-20/-29
F70T8	2	277	119	0.52 A	0.90	0.76	97	1.7	10	-20/-29
	2	120	132	0.50 A	0.90	0.68	96	1.7	10	-20/-29
F60T12/HO	2	277	132	0.50 A	0.90	0.68	96	1.7	10	-20/-29
	2	120	112	0.95 A	0.90	0.80	99	1.7	15	-20/-29
F48T12/HO	2	277	113	0.43 A	0.90	0.80	95	1.7	15	-20/-29

Safety and performance

cUL Listed UL Listed FCC Part 18 (Class A) Non Consumer

LFL PS2

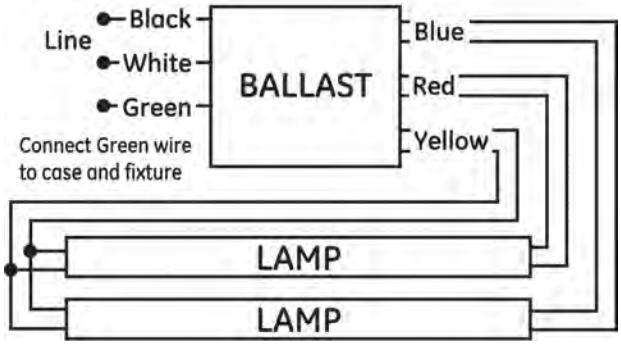

LFL PS3

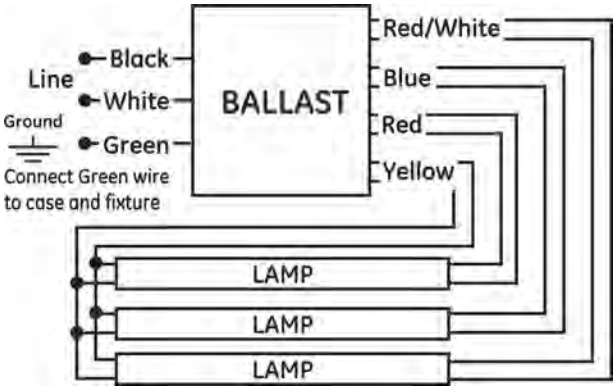

LFL 14

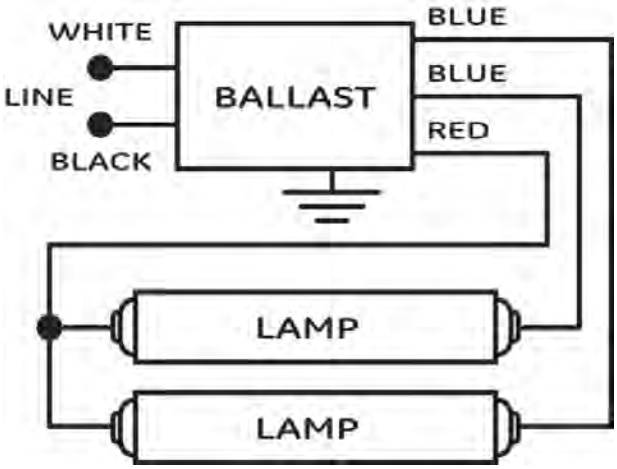

LFL 2

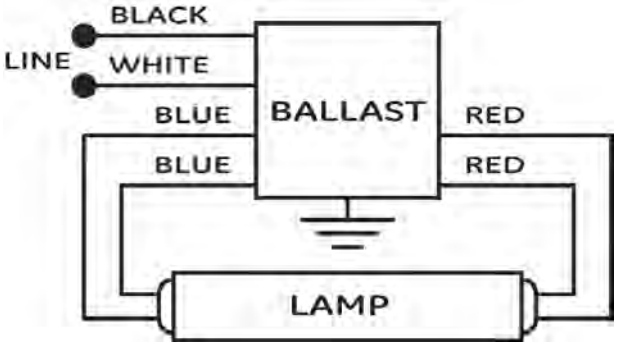

See page E-1 for warranty information.

Case Dimensions
T12 Electronic and High Output Ballasts

ST

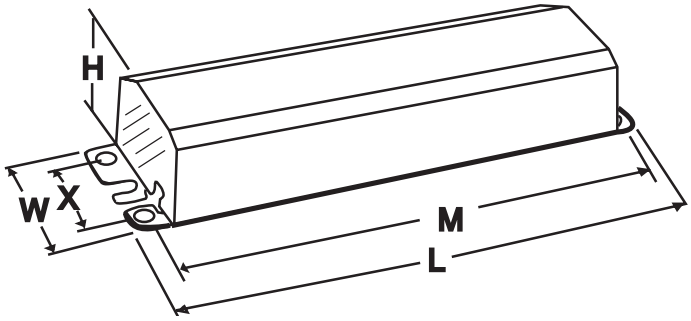

B1

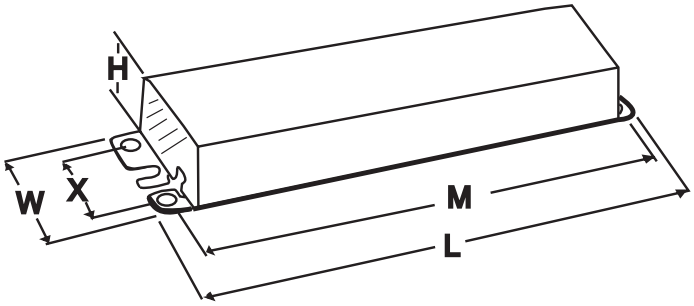

D10, 15, 29

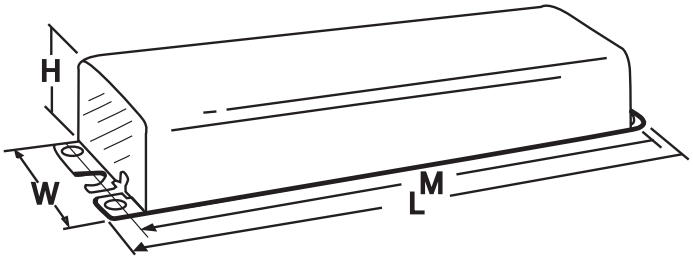

SL

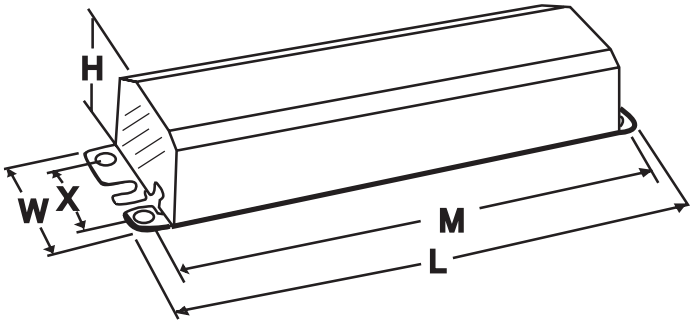

See page E-1 for warranty information.

Notes

See page E-1 for warranty information.

Table of Contents
Magnetic Ballasts

68186 – GEM120PH120DIY

Magnetic Ballasts

1 – F20T12, F15T8, F1512, F14T8, F18T8, 120V, Magnetic Ballast (200H2)

- Magnetic ballast construction for all general fluorescent lighting
- Extends lamp life in frequently switched applications
- Color-coded ballast and package labels reduce misapplication errors (120V Yellow, 277V Red)

Ballast Type	Magnetic – Rapid Start
Starting Method	Preheat
Lamp Wiring	Series
Line Voltage Regulation (+/-)	5%
Ambient Temperature (MAX)	105°F (41°C)
Case Temperature (MAX)	90°C (194°F)
Ballast Factor	Normal
Power Factor Correction	
Sound Rating	A (20-24 decibels)
Additional Info	

Electrical characteristics

Supply Current Frequency	60 Hz

Order information

Std. pack	Pallet Pack	DIY Pack	IP Pack
		68186	

Wiring diagram – LFL 21 – see example on page 15-7	
Case dimensions – Ref Drawing 2 – see page 15-8	
Length (L)	3.06 in (78 mm)
Width (W)	1.81 in (46 mm)
Height (H)	1.5 in (38 mm)
Mounting dimensions	
Bracket Length (BL)	3.0 in (77 mm)
Mount Length (M)	2.75 in (70 mm)
Mount Width (X or F)	
Mount Slots (MS)	0.2 in (6 mm)
Weight	0.66 lbs
Exit Type	Side
Remote Mounting Distance to Lamp	10 ft
Remote Mounting Wire Gauge	18 AWG
Lead lengths	**Length (± 1 in)**
Black	12 in (305 mm)

Specifications by lamp and wattage

Lamp	# of Lamps	Line Volts	System Watts	Nom. Line Current	System Ballast Factor	Ballast Efficacy Factor	Power Factor % (>=)	Crest Factor (<=)	THD (<=)	Min. Starting Temp (°F/°C)
F15T12	1	120	17	0.29 A	0.84	5.1	47	1.6	15	50 / 10
F15T8	1	120	16.5	0.28 A	0.89	5.3	47	1.6	15	50 / 10
F20T12	1	120	17	0.25 A	0.70	4.0	55	1.6	15	50 / 10

Safety and performance

UL Type 1 Outdoor UL Type HL C UL US UL Class P

68187 – GEM120TC120DIY

Magnetic Ballasts

1 – F20T12, F15T8, F15T12, F14T12, 120V, Magnetic Ballast (546BTCP)

- Magnetic ballast construction for all general fluorescent lighting
- Extends lamp life in frequently switched applications
- Color-coded ballast and package labels reduce misapplication errors (120V Yellow, 277V Red)

General characteristics

Ballast Type	Magnetic – Rapid Start
Starting Method	Preheat
Lamp Wiring	Series
Line Voltage Regulation (+/-)	5%
Ambient Temperature (MAX)	105°F (41°C)
Case Temperature (MAX)	90°C (194°F)
Ballast Factor	Normal
Power Factor Correction	
Sound Rating	A (20-24 decibels)
Additional Info	Auto-restart, Thermally protected

Electrical characteristics

Supply Current Frequency	60 Hz

Order information

Std. pack	Pallet Pack	DIY Pack	IP Pack
		68187	

Dimensions

Wiring diagram – LFL 22 – see example on page 15-7	
Case dimensions – Ref Drawing 9 – see page 15-8	
Length (L)	6.5 in (165 mm)
Width (W)	1.75 in (44 mm)
Height (H)	1.38 in (35 mm)
Mounting dimensions	
Bracket Length (BL)	6.4 in (164 mm)
Mount Length (M)	6.0 in (152 mm)
Mount Width (X or F)	
Mount Slots (MS)	0.25 in (6 mm)
Weight	2.10 lbs
Exit Type	Side
Remote Mounting Distance to Lamp	10 ft
Remote Mounting Wire Gauge	18 AWG
Lead lengths	**Length (± 1 in)**
Black	20 in (508 mm)
Blue	15 in (381 mm)
Red	15 in (381 mm)

Specifications by lamp and wattage

Lamp	# of Lamps	Line Volts	System Watts	Nom. Line Current	System Ballast Factor	Ballast Efficacy Factor	Power Factor % (>=)	Crest Factor (<=)	THD (<=)	Min. Starting Temp (°F/°C)
F20T12	1	120	18.6	0.31	0.76	2.0	0.51	1.7	30	50 / 10
F15T8	1	120	18.3	0.32	0.93	2.6	0.48	1.7	30	50 / 10
F14T12	1	120	18.1	0.32	0.94	2.6	0.47	1.7	30	50 / 10
F15T12	1	120	18.2	0.31	0.91	2.6	0.49	1.7	30	50 / 10

Safety and performance

UL Type 1 Outdoor UL Type HL UL Class P C UL US

See page E-1 for warranty information.

Magnetic Ballasts
For Two Circleline T9 Preheat Lamps

68190 – GEM1FC16T9RS120

Magnetic Ballasts

2 – FC12T9, FC16T9, FC8T9, FC12T9, 120V, Magnetic (726VLHWSTCP)

- Magnetic ballast construction for all general fluorescent lighting
- Extends lamp life in frequently switched applications
- Color-coded ballast and package labels reduce misapplication errors (120V Yellow, 277V Red)

General characteristics

Ballast Type	Magnetic – Rapid Start
Starting Method	Preheat
Lamp Wiring	Series
Line Voltage Regulation (+/-)	5%
Ambient Temperature (MAX)	105°F (41°C)
Case Temperature (MAX)	90°C (194°F)
Ballast Factor	Normal
Power Factor Correction	
Sound Rating	A (20-24 decibels)
Additional Info	Auto-restart, Thermally protected

Electrical characteristics

Supply Current Frequency	60 Hz

Order information

Std. pack	Pallet Pack	DIY Pack	IP Pack
		68190	

Dimensions

Wiring diagram – LFL 037 – see example on page 15-7	
Case dimensions – Ref Drawing 9 – see page 15-8	
Length (L)	6.5 in (167 mm)
Width (W)	1.75 in (44 mm)
Height (H)	1.38 in (35 mm)
Mounting dimensions	
Bracket Length (BL)	6.5 in (167 mm)
Mount Length (M)	6.0 in (152 mm)
Mount Width (X or F)	
Mount Slots (MS)	0.3 in (8 mm)
Weight	1.60 lbs
Exit Type	Side
Remote Mounting Distance to Lamp	10 ft
Remote Mounting Wire Gauge	18 AWG
Lead lengths	**Length (± 1 in)**
White	15 in (381 mm)
Black	15 in (381 mm)
Red, Blue, Yellow	11 in (280 mm)

Specifications by lamp and wattage

Lamp	# of Lamps	Line Volts	System Watts	Nom. Line Current	System Ballast Factor	Ballast Efficacy Factor	Power Factor % (>=)	Crest Factor (<=)	THD (<=)	Min. Starting Temp (°F/°C)
FC16T9/FC12T9	2	120	53	0.60 A	1.70	2.30	75	1.7	30	50 / 10
FC8T9/FC12T9	2	120	43	0.60 A	1.70	2.30	60	1.7	30	50 / 10

Safety and performance

UL Type 1 Outdoor UL Type HL UL Class P C UL US

See page E-1 for warranty information.

Magnetic Ballasts
For One Circleline T9 Preheat Lamp

68193 – GEM1FC8T9RS120IP

Magnetic Ballasts

1 – FC8T9, FC6T9, RS, 120V, Magnetic Ballast (547RSWSTCP)

- Magnetic ballast construction for all general fluorescent lighting
- Extends lamp life in frequently switched applications
- Color-coded ballast and package labels reduce misapplication errors (120V Yellow, 277V Red)

General characteristics

Ballast Type	Magnetic – Rapid Start
Starting Method	Preheat
Lamp Wiring	Series
Line Voltage Regulation (+/-)	5%
Ambient Temperature (MAX)	105°F (41°C)
Case Temperature (MAX)	90°C (194°F)
Ballast Factor	Normal
Power Factor Correction	
Sound Rating	A (20-24 decibels)
Additional Info	Auto-restart, Thermally protected

Electrical characteristics

Supply Current Frequency	60 Hz

Order information

Std. pack	Pallet Pack	DIY Pack	IP Pack
			68193

Dimensions

Wiring diagram – LFL 29 – see example on page 15-7	
Case dimensions – Ref Drawing 9 – see page 15-8	
Length (L)	6.5 in (165 mm)
Width (W)	1.75 in (44 mm)
Height (H)	1.38 in (35 mm)
Mounting dimensions	
Bracket Length (BL)	6.4 in (164 mm)
Mount Length (M)	6.0 in (152 mm)
Mount Width (X or F)	
Mount Slots (MS)	0.25 in (6 mm)
Weight	1.0 lbs
Exit Type	Side
Remote Mounting Distance to Lamp	10 ft
Remote Mounting Wire Gauge	18 AWG
Lead lengths	**Length (± 1 in)**
Black	15 in (381 mm)
White	15 in (381 mm)
Blue	9 in (229 mm)
Red	9 in (229 mm)

Specifications by lamp and wattage

Lamp	# of Lamps	Line Volts	System Watts	Nom. Line Current	System Ballast Factor	Ballast Efficacy Factor	Power Factor % (>=)	Crest Factor (<=)	THD (<=)	Min. Starting Temp (°F/°C)
FC8T9	1	120	20	0.32 A	0.76	3.8	52	1.8	30	50 / 10
FC6T9	1	120	20	0.31 A	0.78	3.7	53	1.8	30	50 / 10

Safety and performance UL Type 1 Outdoor UL Type HL UL Class P C UL US

68191 – GEM1FC8T9RS120DI

Magnetic Ballasts

1 – FC8T9, RS, 120V Magnetic Ballast (547RSWSTCP)

- Magnetic ballast construction for all general fluorescent lighting
- Extends lamp life in frequently switched applications
- Color-coded ballast and package labels reduce misapplication errors (120V Yellow, 277V Red)

General characteristics

Ballast Type	Magnetic - Rapid Start
Starting Method	Preheat
Lamp Wiring	Series
Line Voltage Regulation (+/-)	5%
Ambient Temperature (MAX)	219°F (104°C)
Case Temperature (MAX)	90°C (194°F)
Ballast Factor	Normal
Power Factor Correction	
Sound Rating	A (20-24 decibels)
Additional Info	Auto restart, Thermally protected

Electrical characteristics

Supply Current Frequency	60 Hz

Order information

Std. pack	Pallet Pack	DIY Pack	IP Pack
			68191

Dimensions

Wiring diagram – LFL 29 – see example on page 15-7	
Case dimensions – Ref Drawing 9 – see page 15-8	
Length (L)	6.5 in (167 mm)
Width (W)	1.75 in (44 mm)
Height (H)	1.38 in (35 mm)
Mounting dimensions	
Bracket Length (BL)	6.4 in (164 mm)
Mount Length (M)	6.0 in (152 mm)
Mount Width (X or F)	
Mount Slots (MS)	0.3 in (8 mm)
Weight	1.0 lbs
Exit Type	Side
Remote Mounting Distance to Lamp	10 ft
Remote Mounting Wire Gauge	18 AWG
Lead lengths	**Length (± 1 in)**
Black	15 in (381 mm)
White	15 in (381 mm)
Red	9 in (229 mm)
Blue	9 in (229 mm)

Specifications by lamp and wattage

Lamp	# of Lamps	Line Volts	System Watts	Nom. Line Current	System Ballast Factor	Ballast Efficacy Factor	Power Factor % (>=)	Crest Factor (<=)	THD (<=)	Min. Starting Temp (°F/°C)
FC8T9	1	120	20	0.32 A	0.76	3.8	52	1.8	30	50 / 10
FC6T9	1	120	20	0.31 A	0.78	3.7	53	1.8	30	50 / 10

Safety and performance UL Type 1 Outdoor UL Type HL UL Class P C UL US

See page E-1 for warranty information.

Magnetic Ballasts

For T8 and T12 Straight Lamps and 2 Pin CFL Lamps

68192 – GEM220TS120DIY

Magnetic Ballasts

2 – F20T12, F15T8, F15T12, F14T12, 120V, Magnetic Ballast (447LRVLHTCP)

- Magnetic ballast construction for all general fluorescent lighting
- Extends lamp life in frequently switched applications
- Color-coded ballast and package labels reduce misapplication errors (120V Yellow, 277V Red)

General characteristics

Ballast Type	Magnetic – Rapid Start
Starting Method	Preheat
Lamp Wiring	Series
Line Voltage Regulation (+/-)	5%
Ambient Temperature (MAX)	105°F (41°C)
Case Temperature (MAX)	90°C (194°F)
Ballast Factor	Normal
Power Factor Correction	
Sound Rating	A (20-24 decibels)
Additional Info	Auto-restart, Thermally protected

Electrical characteristics

Supply Current Frequency	60 Hz

Order information

Std. pack	Pallet Pack	DIY Pack	IP Pack
		68192	

Dimensions

Wiring diagram – LFL PS2 – see example on page 15-7	
Case dimensions – Ref Drawing 9 – see page 15-8	
Length (L)	6.5 in (167 mm)
Width (W)	1.75 in (44 mm)
Height (H)	1.38 in (35 mm)
Mounting dimensions	
Bracket Length (BL)	6.5 in (167 mm)
Mount Length (M)	6.0 in (152 mm)
Mount Width (X or F)	
Mount Slots (MS)	0.30 in (8 mm)
Weight	1.55 lbs
Exit Type	Side
Remote Mounting Distance to Lamp	10 ft
Remote Mounting Wire Gauge	18 AWG
Lead lengths	**Length (± 1 in)**
Black	15 in (381 mm)
Red	15 in (381 mm)
Blue	15 in (381 mm)
Yellow	15 in (381 mm)

Specifications by lamp and wattage

Lamp	# of Lamps	Line Volts	System Watts	Nom. Line Current	System Ballast Factor	Ballast Efficacy Factor	Power Factor % (>=)	Crest Factor (<=)	THD (<=)	Min. Starting Temp (°F/°C)
F20T12	2	120	32	0.50 A	0.75	2.05	52	1.7	30	50 / 10
F15T12	2	120	31	0.52 A	0.88	2.51	50	1.7	30	50 / 10
F15T8	2	120	30.5	0.52 A	0.85	2.54	51	1.7	30	50 / 10

Safety and performance UL Type 1 Outdoor UL Type HL UL Class P C UL US

68188 – GEM1CF13PH120

Magnetic Ballasts

120V Magnetic Ballast For one 2 Pin 13W CFL Lamp

- Magnetic ballast construction for all general fluorescent lighting
- Extends lamp life in frequently switched applications
- Color-coded ballast and package labels reduce misapplication errors (120V Yellow, 277V Red)

General characteristics

Ballast Type	Magnetic - Rapid Start
Starting Method	Preheat
Lamp Wiring	Series
Line Voltage Regulation (+/-)	5%
Ambient Temperature (MAX)	219°F (104°C)
Case Temperature (MAX)	90°C (194°F)
Ballast Factor	Normal
Power Factor Correction	
Sound Rating	A (20-24 decibels)
Additional Info	Auto restart, Thermally protected

Electrical characteristics

Supply Current Frequency	60 Hz

Order information

Std. pack	Pallet Pack	DIY Pack	IP Pack
			68188

Dimensions

Wiring diagram – LFL 24 – see example on page 15-7	
Case dimensions – Ref Drawing 2 – see page 15-8	
Length (L)	3.06 in (78 mm)
Width (W)	1.81 in (46 mm)
Height (H)	1.5 in (38 mm)
Mounting dimensions	
Bracket Length (BL)	6.4 in (163 mm)
Mount Length (M)	2.75 in (mm)
Mount Width (X or F)	
Mount Slots (MS)	0.3 in (8 mm)
Weight	0.66 lbs
Exit Type	Side
Remote Mounting Distance to Lamp	10 ft
Remote Mounting Wire Gauge	18 AWG
Lead lengths	**Length (± 1 in)**
Black	12 in (305 mm)
Black	12 in (305 mm)

Specifications by lamp and wattage

Lamp	# of Lamps	Line Volts	System Watts	Nom. Line Current	System Ballast Factor	Ballast Efficacy Factor	Power Factor % (>=)	Crest Factor (<=)	THD (<=)	Min. Starting Temp (°F/°C)
CFT/Q13W/GX23	1	120	15.5	0.24 A	0.93	6.00	50	1.6	15	50 / 10

Safety and performance Type 1 Outdoor UL Type HL UL Class P

See page E-1 for warranty information.

Fluorescent Accessories

Fluorescent Accessories	Prod Code	Description	Application	Pack Qty.	Pack Type
Starters	64818	FS-2-C/TP	Starters for 14, 15 & 20 Watt Flu. Lamps	6	Tray Pack
	64819	FS-4-C/TP	Starters for 30 & 40 Watt Flu. Lamps	6	Tray Pack
	64820	FS-25-C/TP	Starters for 22 & 25 Watt Flu. Lamps	6	Tray Pack
	64821	FS-5-C/TP	Starters for 4, 6 & 8 Watt Flu. Lamps	6	Tray Pack
Sockets	64822	BP-LP/TP	Low Profile Socket Set for Bi-Pin Flu. Lamps	7	Tray Pack
	64823	BP/TP	Socket Set for Bi-Pin Flu. Lamps	7	Tray Pack
	64824	BP-FM/TP	Face Mount Socket Set for Bi-Pin Flu. Lamps	7	Tray Pack
	64825	SL-SS/TP	Socket Set for Slimline Flu. Lamps	3	Tray Pack

See page E-1 for warranty information.

Wiring Diagrams
Magnetic Ballasts

LFL 21

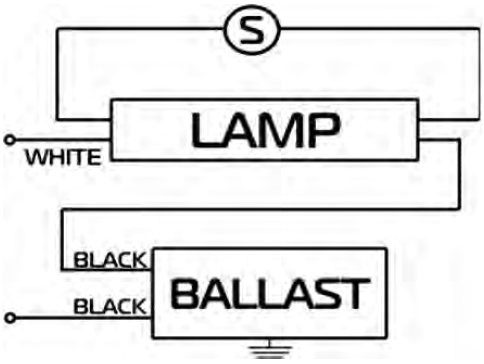

LFL 22

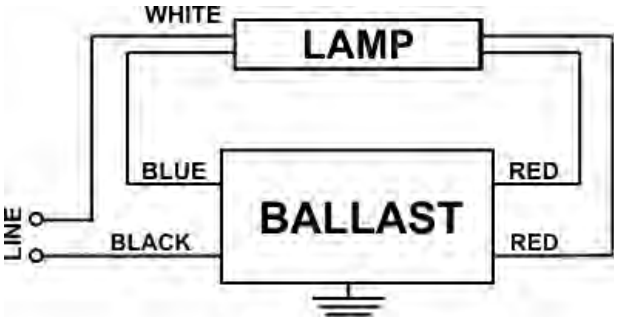

LFL 037

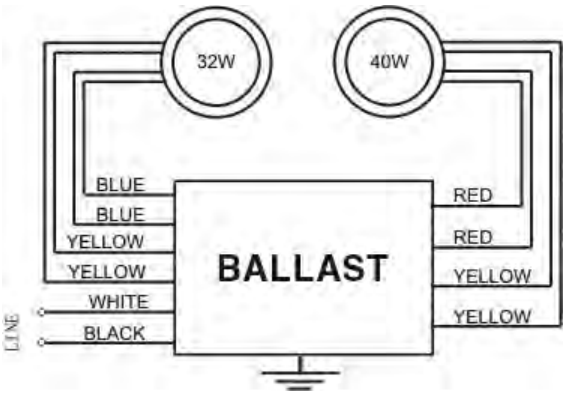

LFL 038

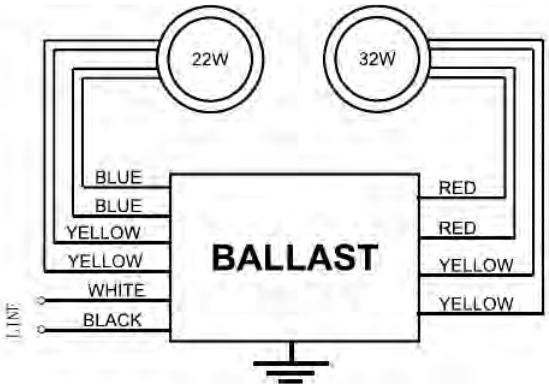

LFL 29

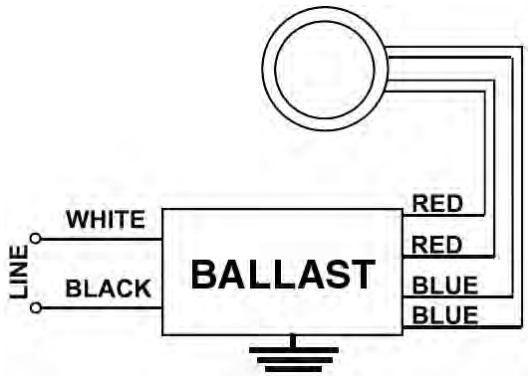

LFL PS2

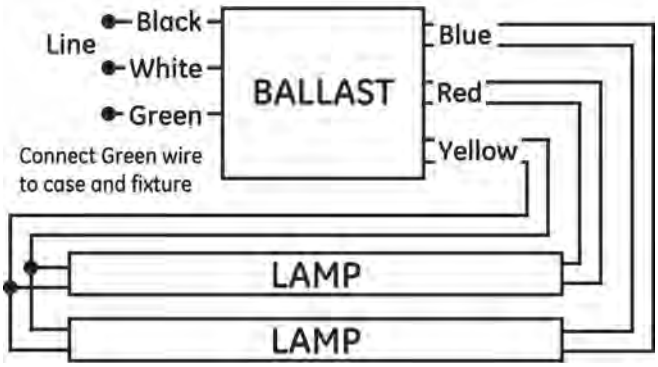

LFL 24

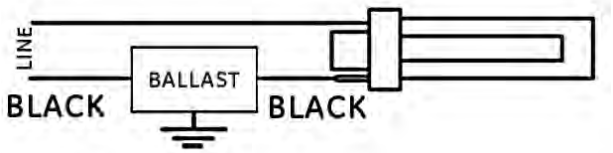

See page E-1 for warranty information.

Drawing 2

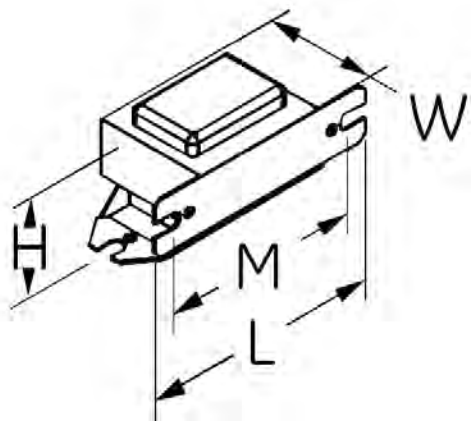

Drawing 9

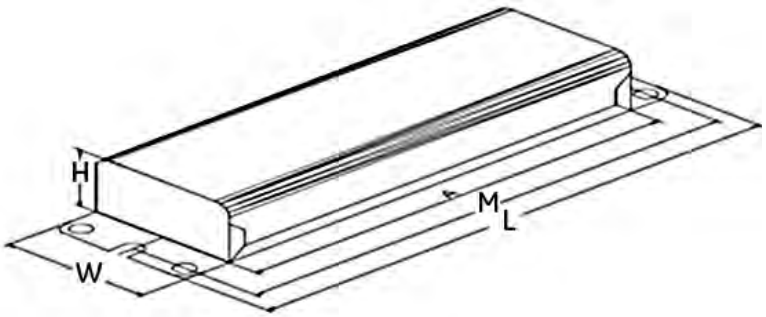

See page E-1 for warranty information.

Table of Contents
Sign Ballasts

GE T12HO Survivor Sign Ballasts

GE's line of T12HO Sign Ballasts provides a complete solution to all of your sign illumination needs. Designed with ease of retrofit in mind, the Survivor All-Weather Sign Ballast's footprint mirrors that of the most common sign ballasts found on the market today for quick and convenient replacement in existing box signs and displays.

The GE T12HO Survivor All-Weather Sign Ballast system simplifies the contractor and distributor's life with just 6 SKUs to choose from for all of their sign ballast requirements.

Our rugged GE Survivor All-Weather Ballasts are designed and manufactured to demanding specifications. The Survivor is crafted from high-grade steel laminations and tightly wound, vacuum impregnated, copper coils for superior heat dissipation and water resistance.

These components are then encased in high quality potting material for additional heat sinking and weather resistance. Finally, components are secured in a durable white steel powder coated box for superior corrosion protection and long life. All GE Survivor All-Weather Ballasts are backed by a 2 year limited warranty.

Sign Ballast for T12HO, 120 volt

Product Code	Description	Brand	Footage	# lamps	Total Lamp Footage																																	# of Lamps					
					2	4	6	8	10	12	14	16	18	20	22	24	26	28	30	32	34	36	38	40	42	44	46	48	1	2	3	4	5	6
72103	**GESB-0412-12-IP**	**GE**	4'-12'	1,2																														
ASB-0412-12-BL-TP		Advance	4'-12'	1,2																														
USB-0412-12		ULT	4'-12'	1,2																														
72104	**GESB-0620-24-IP**	**GE**	6'-20'	2,3,4																														
ASB-0620-24-BL-TP		Advance	6'-20'	2,3,4																														
USB-0816-14		ULT	8'-16'	1,2,3,4																														
72105	**GESB-1224-24-IP**	**GE**	12'-24'	2,3,4																														
ASB-1224-24-BL-TP		Advance	12'-24'	2,3,4																														
USB-1024-14		ULT	10'-24'	1,2,3,4																														
72106	**GESB-1240-46-IP**	**GE**	12'-40'	4,5,6																														
ASB-1240-24-BL-TP		Advance	12'-40'	4,5,6																														
USB-1632-24		ULT	16'-32'	2,3,4																														
ASB-2432-34-BL-TP		Advance	24'-32'	3,4																														
72107	**GESB-2040-24-IP**	**GE**	20'-40'	4,5,6																														
ASB-2040-24-BL-TP		Advance	20'-40'	2,3,4																														
USB-2036-46		ULT	20'-36'	4,5,6																														
72108	**GESB-2448-46-IP**	**GE**	24'-48'	4,5,6																														
ASB-2448-46-BL-TP		Advance	24'-48'	4,5,6																														
USB-2048-56		ULT	20'-48'	4,5,6																														

The best way to select or provide cross-reference to competition ballasts is to understand the sign ballast nomenclature.

GE Sign Ballast nomenclature

G E S B - 0 6 2 0 - 2 4 - I P

- **G E S B** — GE Sign Ballast
- **0 6 2 0** — This represents the min/max linear footage of lamps it can operate.
- **2 4** — The last number represents the number of lamps
- **I P** — Individual pack

Examples:

GESB-0620-24-IP can operate a minimum of two lamps at a total length of 6 feet, up to four lamps at a total length of 20 feet.

GESB-2040-24-IP can operate a minimum of four lamps at a total length of 20 feet, up to six lamps at a total length of 40 feet.

See page E-1 for warranty information.

Sign Ballasts
For T12 High Output Lamps

72103 – GESB-0412-12-IP

Sign Ballasts
T12HO Sign Ballast 4 to 12 ft, 1 to 2 lamps

- High-output ballasts for rugged outdoor sign cabinet applications
- Reliable low-temperature starting – as low as -20°F
- Ideal for high-moisture environments – UL Type 2 Outdoor and HL rating
- Class P thermal protection

General characteristics

Ballast Type	Magnetic – T12 Sign Illuminating
Starting Method	Rapid start
Lamp Wiring	Series
Line Voltage Regulation (+/-)	10%
Ambient Temperature (MAX)	105°F (41°C)
Case Temperature (MAX)	90°C (194°F)
Ballast Factor	Normal
Power Factor Correction	Active
Sound Rating	
Additional Info	Inherently Thermally Protected, UL Class P

Electrical characteristics

Supply Current Frequency	60 Hz

Order information

10 Pack	Pallet Pack	DIY Pack	IP Pack
72103			

Dimensions

Wiring diagrams – Sign 0412 – see example on page 16-7	
Case dimensions – Ref Drawing S1 – see page 16-9	
Length (L)	11.75 in (298 mm)
Width (W)	3.19 in (81 mm)
Height (H)	2.6 in (68 mm)
Mounting dimensions	
Bracket Length (BL)	
Mount Length (M)	11.0 in (279 mm)
Mount Width (X or F)	3.19 in (81 mm)
Mount Slots (MS)	
Weight	8.00 lbs
Exit Type	Side
Remote Mounting Distance to Lamp	Varies
Remote Mounting Wire Gauge	Varies
Lead lengths	**Length (± 1 in)**
White and Black	24 in (610 mm)
Brown and Blue	80 in (2032 mm)
Orange/Black	60 in (1524 mm)
Orange, Red and Yellow	60 in (1524 mm)
Blue/White	72 in (1829 mm)

Specifications by lamp and wattage

Lamp	# of Lamps	Line Volts	System Watts	Nom. Line Current	System Ballast Factor	Ballast Efficacy Factor	Power Factor % (>=)	Crest Factor (<=)	THD (<=)	Min. Starting Temp (°F/°C)
	2	120	170	1.48 A	0.89	0.52	98	1.9	15	-20/-30
F72T12/HO	1	120	100	0.92 A	0.81	0.81	92	2.0	35	-20/-30
F96T12/HO	1	120	120	1.03 A	0.84	0.70	96	2.0	25	-20/-30
	2	120	130	1.13 A	0.85	0.65	97	2.0	20	-20/-30
F48T12/HO	1	120	80	0.82 A	0.77	0.96	84	2.1	55	-20/-30
F24T12/HO	2	120	90	0.90 A	0.78	0.87	84	2.1	55	-20/-30

Safety and performance UL Type 2 Outdoor UL Listed cUL Listed 3-Year Warranty

72104 – GESB-0620-24-IP

Sign Ballasts
T12HO Sign Ballast 6 to 20 ft, 2 to 4 lamps

- High-output ballasts for rugged outdoor sign cabinet applications
- Reliable low-temperature starting – as low as -20°F
- Ideal for high-moisture environments – UL Type 2 Outdoor and HL rating
- Class P thermal protection

General characteristics

Ballast Type	Magnetic – T12 Sign Illuminating
Starting Method	Rapid start
Lamp Wiring	Series
Line Voltage Regulation (+/-)	10%
Ambient Temperature (MAX)	105°F (41°C)
Case Temperature (MAX)	90°C (194°F)
Ballast Factor	Normal
Power Factor Correction	Active
Sound Rating	
Additional Info	Inherently Thermally Protected, UL Class P

Electrical characteristics

Supply Current Frequency	50 Hz/60 Hz

Order information

10 Pack	Pallet Pack	DIY Pack	IP Pack
72104			

Dimensions

Wiring diagrams – Sign 0620 – see example on page 16-8	
Case dimensions – Ref Drawing S1 – see page 16-9	
Length (L)	11.75 in (298 mm)
Width (W)	3.19 in (81 mm)
Height (H)	2.6 in (68 mm)
Mounting dimensions	
Bracket Length (BL)	
Mount Length (M)	11.0 in (279 mm)
Mount Width (X or F)	3.19 in (81 mm)
Mount Slots (MS)	
Weight	16.00 lbs
Exit Type	Side
Remote Mounting Distance to Lamp	Varies
Remote Mounting Wire Gauge	Varies
Lead lengths	**Length (± 1 in)**
White and Black	24 in (610 mm)
Brown and Blue	80 in (2032 mm)
Orange/Black	60 in (1524 mm)
Orange, Red and Yellow	60 in (1524 mm)
Blue/White	72 in (1829 mm)

Specifications by lamp and wattage

Lamp	# of Lamps	Line Volts	System Watts	Nom. Line Current	System Ballast Factor	Ballast Efficacy Factor	Power Factor % (>=)	Crest Factor (<=)	THD (<=)	Min. Starting Temp (°F/°C)
F60T12/HO	4	120	300	2.56 A	1.06	0.35	95	1.7	15	-20 / -30
F72T12/HO	3	120	240	2.34 A	0.96	0.40	99	1.8	15	-20 / -30
F36T12/HO	2	120	115	1.41 A	0.87	0.76	87	2.0	45	-20 / -30

Safety and performance UL Type 2 Outdoor UL Listed cUL Listed 3-Year Warranty

See page E-1 for warranty information.

72105 – GESB-1224-24-IP

Sign Ballasts

T12HO Sign Ballast 12 to 24 ft, 2 to 4 lamps

- High-output ballasts for rugged outdoor sign cabinet applications
- Reliable low-temperature starting – as low as -20°F
- Ideal for high-moisture environments – UL Type 2 Outdoor and HL rating
- Class P thermal protection

General characteristics

Ballast Type	Magnetic –T12 Sign Illuminating
Starting Method	Rapid start
Lamp Wiring	Series
Line Voltage Regulation (+/-)	10%
Ambient Temperature (MAX)	105°F (41°C)
Case Temperature (MAX)	90°C (194°F)
Ballast Factor	Normal
Power Factor Correction	Active
Sound Rating	
Additional Info	Inherently Thermally Protected, UL Class P

Electrical characteristics

Supply Current Frequency	60 Hz

Order information

10 Pack	Pallet Pack	DIY Pack	IP Pack
72105			

Dimensions

Wiring diagrams – Sign 1224 – see example on page 16-8	
Case dimensions – Ref Drawing S1 – see page 16-9	
Length (L)	11.75 in (298 mm)
Width (W)	3.19 in (81 mm)
Height (H)	2.6 in (68 mm)
Mounting dimensions	
Bracket Length (BL)	
Mount Length (M)	11.0 in (279 mm)
Mount Width (X or F)	3.19 in (81 mm)
Mount Slots (MS)	
Weight	16.00 lbs
Exit Type	Side
Remote Mounting Distance to Lamp	Varies
Remote Mounting Wire Gauge	Varies
Lead lengths	**Length (± 1 in)**
White and Black	24 in (610 mm)
Brown and Blue	80 in (2032 mm)
Orange/Black	60 in (1524 mm)
Orange, Red and Yellow	60 in (1524 mm)
Blue/White	72 in (1829 mm)

Specifications by lamp and wattage

Lamp	# of Lamps	Line Volts	System Watts	Nom. Line Current	System Ballast Factor	Ballast Efficacy Factor	Power Factor % (>=)	Crest Factor (<=)	THD (<=)	Min. Starting Temp (°F/°C)
	4	120	285	2.70 A	0.84	0.29	99	1.7	10	-20 / -30
	3	120	230	2.10 A	0.82	0.36	96	1.7	15	-20 / -30
F72T12/HO	2	120	170	1.60 A	0.82	0.48	87	1.7	25	-20 / -30

Safety and performance UL Type 2 Outdoor UL Listed cUL Listed Class P 3-Year Warranty

72106 – GESB-1240-46-IP

Sign Ballasts

T12HO Sign Ballast 12 to 40 ft, 4 to 6 lamps

- High-output ballasts for rugged outdoor sign cabinet applications
- Reliable low-temperature starting – as low as -20°F
- Ideal for high-moisture environments – UL Type 2 Outdoor and HL rating
- Class P thermal protection

General characteristics

Ballast Type	Magnetic - T12 Sign Illuminating
Starting Method	Rapid start
Lamp Wiring	Series
Line Voltage Regulation (+/-)	10%
Ambient Temperature (MAX)	105°F (41°C)
Case Temperature (MAX)	90°C (194°F)
Ballast Factor	Normal
Power Factor Correction	Active
Sound Rating	
Additional Info	Inherently Thermally Protected, UL Class P

Electrical characteristics

Supply Current Frequency	60 Hz

Order information

10 Pack	Pallet Pack	DIY Pack	IP Pack
72106			

Dimensions

Wiring diagrams – Sign 1240 – see example on page 16-8	
Case dimensions – Ref Drawing S1 – see page 16-9	
Length (L)	11.75 in (298 mm)
Width (W)	3.19 in (81 mm)
Height (H)	2.6 in (68 mm)
Mounting dimensions	
Bracket Length (BL)	
Mount Length (M)	11.0 in (279 mm)
Mount Width (X or F)	3.19 in (81 mm)
Mount Slots (MS)	
Weight	18.00 lbs
Exit Type	Side
Remote Mounting Distance to Lamp	Varies
Remote Mounting Wire Gauge	Varies
Lead lengths	**Length (± 1 in)**
White and Black	24 in (610 mm)
Brown and Blue	80 in (2032 mm)
Orange/Black	60 in (1524 mm)
Orange, Red and Yellow	60 in (1524 mm)
Blue/White	72 in (1829 mm)

Specifications by lamp and wattage

Lamp	# of Lamps	Line Volts	System Watts	Nom. Line Current	System Ballast Factor	Ballast Efficacy Factor	Power Factor % (>=)	Crest Factor (<=)	THD (<=)	Min. Starting Temp (°F/°C)
(2) F96T12/HO + (4) F72T12/HO	6	120	466	4.00 A	0.78	0.17	98	1.6	10	-20 / -30
F72T12/HO	5	120	372	3.50 A	0.77	0.21	90	1.7	15	-20 / -30
F48T12/HO	5	120	237	2.90 A	0.72	0.30	69	1.8	20	-20 / -30
F36T12/HO	4	120	196	2.80 A	0.62	0.32	59	1.9	35	-20 / -30

Safety and performance UL Type 2 Outdoor UL Listed cUL Listed 3-Year Warranty

See page E-1 for warranty information.

Sign Ballasts
For T12 High Output Lamps

72107 – GESB-2040-24-IP
Sign Ballasts
T12HO Sign Ballast 20 to 40 ft, 2 to 4 lamps

- High-output ballasts for rugged outdoor sign cabinet applications
- Reliable low-temperature starting – as low as -20°F
- Ideal for high-moisture environments – UL Type 2 Outdoor and HL rating
- Class P thermal protection

General characteristics

Ballast Type	Magnetic - T12 Sign Illuminating
Starting Method	Rapid start
Lamp Wiring	Series
Line Voltage Regulation (+/-)	15%
Ambient Temperature (MAX)	105°F (41°C)
Case Temperature (MAX)	90°C (194°F)
Ballast Factor	Normal
Power Factor Correction	Active
Enclosure Type	Metal Can
Additional Info	Inherently Thermally Protected, UL Class P

Electrical characteristics

Supply Current Frequency	60 Hz

Order information

10 Pack	Pallet Pack	DIY Pack	IP Pack
72107			

Dimensions

Wiring diagrams – Sign 2040 – see example on page 16-8	
Case dimensions – Ref Drawing S1 – see page 16-9	
Length (L)	19.5 in (495 mm)
Width (W)	3.2 in (81 mm)
Height (H)	2.4 in (62 mm)
Mounting dimensions	
Bracket Length (BL)	
Mount Length (M)	18.6 in (473 mm)
Mount Width (X or F)	
Mount Slots (MS)	
Weight	22.2 lbs
Exit Type	Side
Remote Mounting Distance to Lamp	Varies
Remote Mounting Wire Gauge	Varies
Lead lengths	**Length (± 1 in)**
White and Black	24 in (610 mm)
Brown and Yellow	72 in (1829 mm)
Blue and Red	80 in (2032 mm)
Blue/White	54 in (1372 mm)

Specifications by lamp and wattage

Lamp	# of Lamps	Line Volts	System Watts	Nom. Line Current	System Ballast Factor	Ballast Efficacy Factor	Power Factor % (>=)	Crest Factor (<=)	THD (<=)	Min. Starting Temp (°F/°C)
	4	120	464	4.00 A	0.85	0.18	97	1.7	12	-22 / -30
	3	120	357	3.40 A	0.82	0.23	89	1.7	15	-22 / -30
F120T12/HO	2	120	255	3.00 A	0.75	0.29	71	1.8	30	-22 / -30

Safety and performance UL Type 2 Outdoor UL Listed UL Type HL 3-Year Warranty

72108 – GESB-2448-46-IP
Sign Ballasts
T12HO Sign Ballast 6 to 12 ft, 4 to 6 lamps

- High-output ballasts for rugged outdoor sign cabinet applications
- Reliable low-temperature starting – as low as -20°F
- Ideal for high-moisture environments – UL Type 2 Outdoor and HL rating
- Class P thermal protection

General characteristics

Ballast Type	Magnetic – T12 Sign Illuminating
Starting Method	Rapid start
Lamp Wiring	Series
Line Voltage Regulation (+/-)	15%
Ambient Temperature (MAX)	105°F (41°C)
Case Temperature (MAX)	90°C (194°F)
Ballast Factor	Normal
Power Factor Correction	Active
Enclosure Type	Metal Can
Additional Info	Inherently Thermally Protected, UL Class P

Electrical characteristics

Supply Current Frequency	60 Hz

Order information

10 Pack	Pallet Pack	DIY Pack	IP Pack
72108			

Dimensions

Wiring diagrams – Sign 2448 – see example on page 16-8	
Case dimensions – Ref Drawing S1 – see page 16-9	
Length (L)	19.5 in (495 mm)
Width (W)	3.2 in (81 mm)
Height (H)	2.4 in (62 mm)
Mounting dimensions	
Bracket Length (BL)	
Mount Length (M)	18.6 in (473 mm)
Mount Width (X or F)	
Mount Slots (MS)	
Weight	22.2 lbs
Exit Type	Side
Remote Mounting Distance to Lamp	Varies
Remote Mounting Wire Gauge	Varies
Lead lengths	**Length (± 1 in)**
White and Black	24 in (610 mm)
Orange, Brown and Blue	50 in (1270 mm)
Orange/Black	50 in (1270 mm)
Red	80 in (2032 mm)
Blue/White	72 in (1829 mm)
Yellow	70 in (1778 mm)

Specifications by lamp and wattage

Lamp	# of Lamps	Line Volts	System Watts	Nom. Line Current	System Ballast Factor	Ballast Efficacy Factor	Power Factor % (>=)	Crest Factor (<=)	THD (<=)	Min. Starting Temp (°F/°C)
	6	120	621	5.20 A	0.86	0.14	99	1.6	10	-20 / -30
F96T12/HO	5	120	546	4.70 A	0.87	0.16	96	1.6	10	-20 / -30
	5	120	453	4.30 A	0.80	0.18	87	1.7	15	-20 / -30
F72T12/HO	4	120	373	4.00 A	0.72	0.19	78	1.7	20	-20 / -30

Safety and performance UL Type 2 Outdoor UL Listed UL Type HL 3-Year Warranty

88921 – USB-0412-12-IP

Sign Ballasts

4 to 12 ft, 1 to 2 lamps

- High-output ballasts for rugged outdoor sign cabinet applications
- Reliable low-temperature starting – as low as -20°F
- Ideal for high-moisture environments – UL Type 2 Outdoor and HL rating
- Class P thermal protection

General characteristics

Ballast Type	Magnetic – T12 Sign Illuminating
Starting Method	Rapid start
Lamp Wiring	Series
Line Voltage Regulation (+/-)	
Ambient Temperature (MAX)	105°F (41°C)
Case Temperature (MAX)	90°C (194°F)
Ballast Factor	Normal
Power Factor Correction	
Sound Rating	
Additional Info	Inherently Thermally Protected, UL Class P

Electrical characteristics

Supply Current Frequency	60 Hz

Order information

10 Pack	Pallet Pack	DIY Pack	IP Pack
88921			

Dimensions

Wiring diagrams – Sign S1A, Sign S2A – see example on page 16-7	
Case dimensions – Ref Drawing S1 – see page 16-9	
Length (L)	10.5 in (269 mm)
Width (W)	3.19 in (81 mm)
Height (H)	1.75 in (44 mm)
Mounting dimensions	
Bracket Length (BL)	11.7 in (297 mm)
Mount Length (M)	11.1 in (283 mm)
Mount Width (X or F)	
Mount Slots (MS)	
Weight	8.00 lbs
Exit Type	Side
Remote Mounting Distance to Lamp	Varies
Remote Mounting Wire Gauge	Varies
Lead lengths	**Length (± 1 in)**
White and Black	24 in (610 mm)
Blue and Red	38 in (965 mm)
Yellow	48 in (1219 mm)

Specifications by lamp and wattage

Lamp	# of Lamps	Line Volts	System Watts	Nom. Line Current	System Ballast Factor	Ballast Efficacy Factor	Power Factor % (>=)	Crest Factor (<=)	THD (<=)	Min. Starting Temp (°F/°C)
F72T12/HO	2	120	160	1.35 A	1.00	0.62	90			-20 / -29

Safety and performance

UL Type 2 Outdoor UL Type HL CSA UL Listed

Note: This product is no longer manufactured. Remaining stock will be sold.

See page E-1 for warranty information.

Wiring Diagrams
Sign Ballasts

SIGN S1A

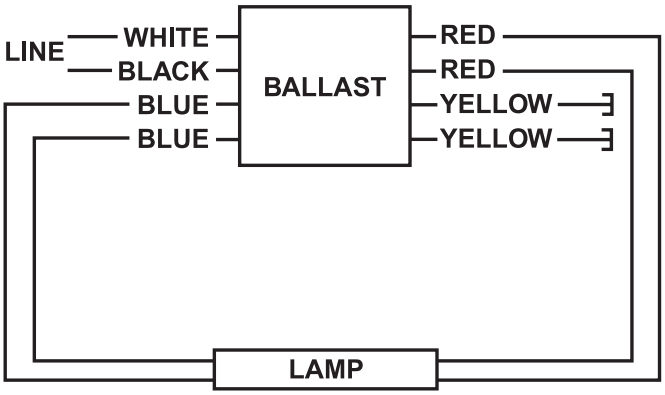

SIGN S2A

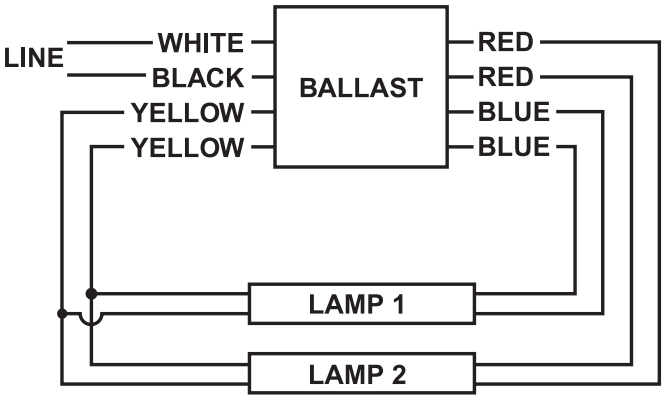

MOUNT LAMPS WITHIN 1 OF GROUNDED METAL REFLECTOR

SIGN 0412

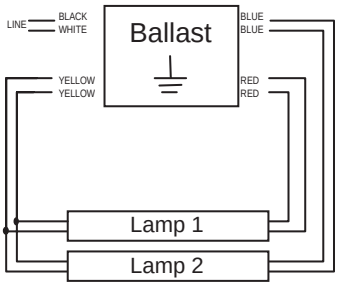

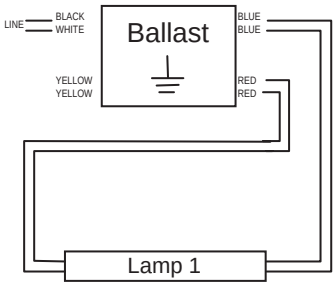

See page E-1 for warranty information.

Wiring Diagrams
Sign Ballasts

SIGN 0620

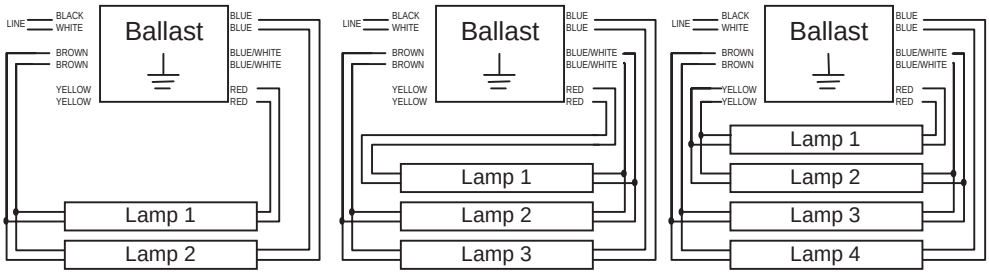

SIGN 1224

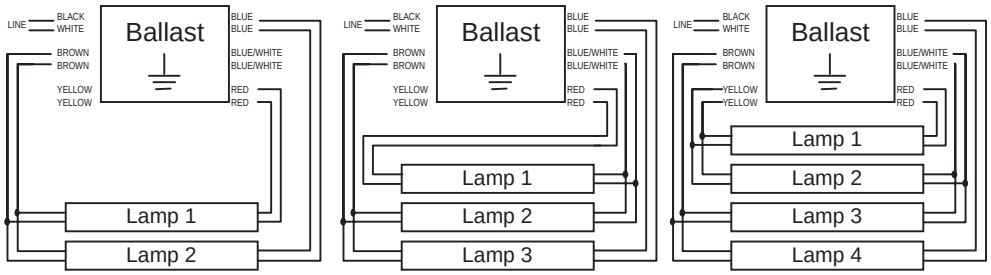

SIGN 1240

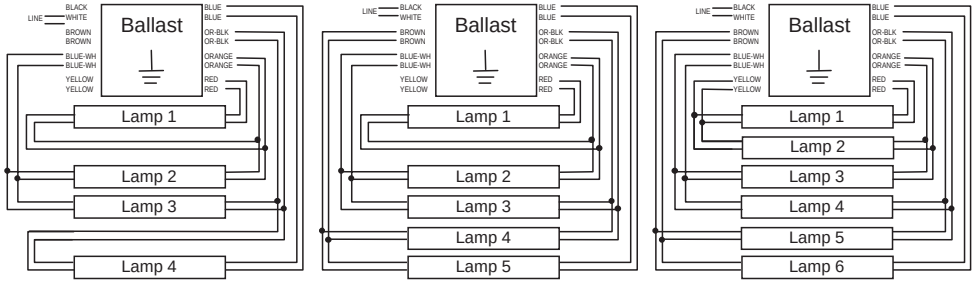

SIGN 2040

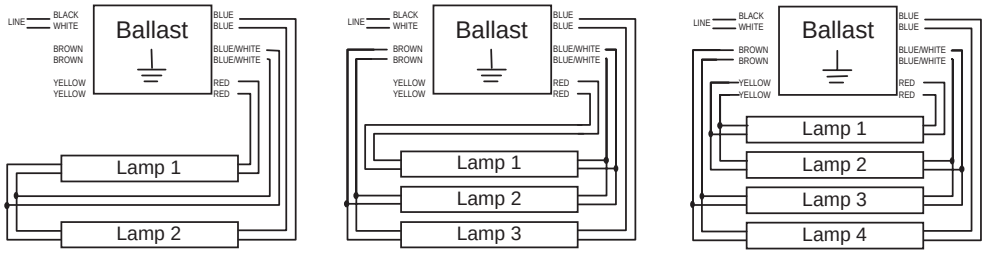

SIGN 2448

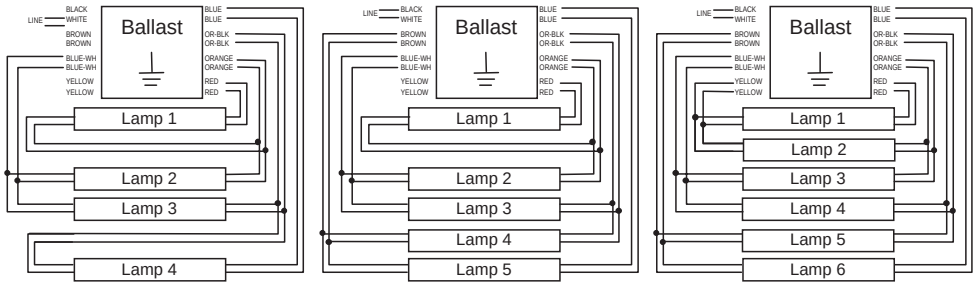

See page E-1 for warranty information.

Case Dimensions
Sign Ballasts

S1

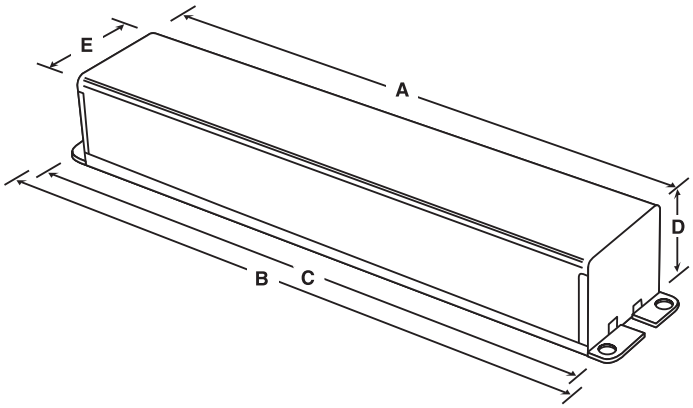

Notes

See page E-1 for warranty information.

Table of Contents
Compact Fluorescent Ballasts

Understanding Compact Fluorescent Ballasts

GE compact fluorescent (CFL) ballasts provide energy saving alternatives to halogen, incandescent or HID light sources. GE Multivolt ProLine® CFL programmed start ballasts combine universal voltage (108-305V) technology with multi-lamp capability, dual entry color-coded connectors and ultra system reliability to create an industry leading CFL solution for commercial and residential applications.

UltraMax® and UltraStart® High Lumen Biax® ballasts with the High Lumen WattMiser® Biax® lamp provides the perfect solution for high efficiency and high lumen output in a small space.

UltraMax® Instant Start Ballasts:

- For use in long burn cycles (>10 hr cycles) to maintain lamp life
- High efficiency (>90%) design
- Universal voltage (120-277V)
- Striation control circuitry
- Small compact housing

UltraStart® Programmed Start Ballasts:

- For use in shorter burn cycles (<3 hr cycles) to extend lamp life
- High efficiency (>90%) cathode cutout design
- Universal voltage (120-277V)
- Striation control circuitry
- Small compact housing
- Parallel lamp operation
- <700ms fast starting time
- Ballasts available for both F40/30W and F40/25W lamps

Multivolt ProLine® CFL ballasts are offered in three different configurations:
1) -SE description – dual entry (side or bottom) connectors, 2) -BES – bottom entry with studs for mounting to junction boxes and 3) -3W – 3-way mounting kits that allow you to have all three mounting options with one kit.

Multivolt ProLine® CFL ballasts come with a five-year ballast and one-year lamp limited warranty. These ballasts also meet the EPA's ENERGY STAR® fixture program requirements with a Consumer Class B EMI rating for residential applications, as well as a high power factor ballast design.

Use the GE Multivolt ProLine® CFL Multi-Lamp compatibility chart (page 17-3) to find the right ballast for your need.

ProLine® CFL Date Code System

Date Code Format: 01 200801 = Week2008 = Year

UltraMax® and UltraStart® Biax® ballasts have the same date code system as all linear fluorescent ballasts.

GE Compact Fluorescent Ballast nomenclature

G E C 2 1 3 - M V P S - S E

- GEC = GE Compact Ballast
- 213 = Max number of lamps and Primary Lamp type
- MVPS = MV = Multivolt (108 to 305 volts); UNV = Universal Voltage (Multi-Voltage); 120 or 277 = voltage; PS = Programmed Start; SI = Series Instant Start; PH = Preheat; RS = Rapid Start; RH = less than 20% THD
- SE = Side & Bottom Entry; BES = Bottom Entry with Studs; 3W = 3-Way Kit (SE, BE, BES); IP = Individual Pack

See page E-1 for warranty information.

GE Multivolt ProLine® CFL Multi-Lamp Capability

	Lamp Type	GEC213-MVPS	GEC218-MVPS	GEC226-MVPS	GEC242-MVPS	GEC140MAX-A	GEC240MAX-A	GEC340MAX-A	GEC225MVPS-A	GEC240MVPS-A
	1 x CFQ13W (G24q) CFTR13W (GX24q)	x								
	2 x CFQ13W (G24q) CFTR13W (GX24q)	x								
	1 x CFQ18W (G24q) CFTR18W (GX24q)	x	x							
	2 x CFQ18W (G24q) CFTR18W (GX24q)		x							
	1 x CFQ26W (G24q) CFTR26W (GX24q)		x	x	x					
	2 x CFQ26W (G24q) CFTR26W (GX24q)			x	x					
	1 x CFQ32W (G24q) CFTR32W (GX24q)			x	x					
	2 x CFQ32W (G24q) CFTR32W (GX24q)				x					
	1 x CFQ42W (G24q) CFTR42W (GX24q)			x	x					
	2 x CFQ42W (G24q) CFTR42W (GX24q)				x					
	1 x 57W (CFTR/GX24q)				x					
T4	1 x 70W (CFTR/GX24q)				x					
	1 x FC9T5-22W (G10q)				x					
	2 x FC9T5-22W (G10q)				x					
	1 x FC12T5-40W (G10q)				x					
	2 x FC12T5-40W (G10q)				x					
	1 x 22W + 1 x 4OW (FC9T5 + FC12T5) (G10q)				x					
	1 x FC16T9 (G10q)			x						
T5 Circline	1 x FC16T9 40W (G10q)									
	2 x F14T5 (G5)									
	2 x F13T5 (G5)									
	2 x F24T5/HO (G5)			x						
	1 x F28T5/HE (G5)					x	x			
	2 x F28T5/HE (G5)						x	x		
T5	3 x F28T5/HE (G5)							x		
	1 x FT18W (2G11)									
	2 x FT18W (2G11)			x						
	1 x FT24W (2G11)				x					
	2 x FT24W (2G11)			x	x					
	1 x FT36W (2G11) or CFM36W (2G11)				x					
	2 x FT36W (2G11) or CFM36W (2G11)				x					
	1 x FT39W (2G11)				x					
	2 x FT39W (2G11)				x					
	1 x FT40/25W or FT40/28W (2G11)					x	x		x	
	2 x FT40/25W or FT40/28W (2G11)						x	x	x	
	3 x FT40/25W or FT40/28W (2G11)							x		
	1 x FT40W (2G11)				x		x			x
	2 x FT40W (2G11)				x		x	x		x
	3 x FT40W (2G11)							x		
FT TT5	1 x FT55W (2G11)				x			x		
	1 x F32T8 (G13)					x*	x*			
	2 x F32T8 (G13)						x*	x*		
T8	3 x F32T8 (G13)							x*		
	1 x CFS10W (GR10q)	x								
	2 x CFS10W (GR10q)	x								
	1 x CFS16W (GR10q)	x								
	2 x CFS16W (GR10q)		x							
	1 x CFS21W (GR10q)		x							
	2 x CFS21W (GR10q)		x	x						
	1 x CFS28W (GR10q)		x		x					
	2 x CFS28W (GR10q)				x					
	1 x CFS38W (GR10q)									
	2 x CFS38W (GR10q)									
2D	1 x CFS55W (GR10q)				x					

* GEC ballast offers End of Lamp Life (EOL) protection with F32T8 lamps

See page E-1 for warranty information.

CFL – Cross Reference Chart

GE	Universal	Advance	Osram	Robertson
GE213-MVPS-3W	C213UNVSE/BE/BES	ICF-2513-H1-LD	QTP 1/2X13CF/UNV	PSM213CQMY
GE218-MVPS-3W	C218UNVSE/BE/BES	ICF-2518H1-LD REL-2Q18 VEL-2Q18 R-2Q18-4P-TP V-2Q18-4P-TP	QTP1/2X18CF/UNV	PSM218CQMY
GE226MVPS-3W	C218UNVSE/BE/BES	ICF-2526-H1-LD REL-1T32 VEL-1T32 REL-1T32 VEL-1T42	QTP 1X26/32/42CF/UNV QTP 2X26/UNV QTP 1/2XCF/UNV	PSM226CQMY
GE242-MVPS-3W	C2642UNVSE/BE/BES	ICF-2S26-M1-BS-QS ICF-2S26-M1-BS-QS ICF-2S42-M2-BS	QTP 2X26/32/42CF/UNV	PSM226CQMVDWCE/S

See page E-1 for warranty information.

Specifications: Multivolt ProLine® CFL Quick Reference Chart

Preliminary	Lamp Type	# of Lamps	Input Volts	Dual Side/ Bottom Exit-SE	Bottom Exit with Studs - BES	3-Way Mount Kit - 3W	Input Watts 2Lamp/ 1Lamp	Line Current 2Lamp/ 1Lamp	Power Factor 2Lamp/ 1Lamp	MAX THD % 2Lamp/ 1Lamp	Ballast Factor 2Lamp/ 1Lamp	Ballast Efficiency Factor 2Lamp/ 1Lamp
			120				29/16	0.25/.16	0.99/.96	10	1.00	3.45/6.25
	CFQ13W/G24q	2 or 1 lamp	277				29/16	0.11/.06	0.99/.96	10	1.00	3.45/6.25
			120				29/16	0.25/.16	0.99/.96	10	1.00	3.45/6.25
	CFTR13W/GX24q	2 or 1 lamp	277				29/16	0.11/.06	0.99/.96	10	1.00	3.45/6.25
			120				20	0.17	0.99	12	1.00	5.00
	CFQ18W/GX24q	1	277				20	0.07	0.97	12	1.00	5.00
			120				20	0.17	0.99	12	1.00	5.00
	CFTR18W/GX24q	1	277				20	0.07	0.97	12	1.00	5.00
			120				31	0.26	0.99	10	1.00	3.22
	F14T5	1	277				31	0.12	0.98	10	1.00	3.22
			120				30	0.25	0.99	10	1.00	3.33
	F13T5	1	277				30	0.11	0.98	10	1.00	3.33
			120				23/13	0.19/.11	0.97/.96	11/14	0.95/1.05	4.13/8.08
	CFS10W/GR10q	2 or 1 lamp	277				23/13	0.09/.05	0.97/.96	11/14	0.95/1.05	4.13/8.08
			120				17	0.14	0.96	12	1.00	5.88
GEC213-MVPS-xx	CFS16W/GR10q	1	277	63101	63091	63089	17	0.06	0.96	12	1.00	5.88
			120				35/19	0.3/.16	0.99/.97	10	0.95/1.00	2.71/5.26
	CFQ18WG24q	2 or 1 lamp	277				35/19	0.13/.07	0.99/.97	10	0.95/1.0	2.71/5.26
			120				39/20	0.33/.17	0.97	10	1.05	2.69/5.25
	CFTR18W/GX24q	2 or 1 lamp	277				39/20	0.14/.08	0.99/.97	10	1.05	2.69/5.25
			120				28	0.24	0.99	12	1.00	3.57
	CFQ26W/G24q	1	277				28	0.10	0.96	12	1.00	3.57
			120				28	0.24	0.99	12	1.00	3.57
	CFTR26W/GX24q	1	277				28	0.10	0.96	12	1.00	3.57
			120				40/20	0.33/.16	0.99/.97	10/15	0.91/.9	2.28/4.5
	CFS21W/GR10q	2 or 1 lamp	277				40/20	.14/.07	0.99/.97	10/15	0.91/.90	2.28/4.5
			120				37	0.31	0.99	10	1.00	2.70
	CFS16W/GR10q	2	277				37	0.13	0.99	10	1.00	2.70
			120				31	0.26	0.99	10	1.00	3.23
GEC218-MVPS-xx	CFS28W/GR10q	1	277	63096	63098	63093	31	0.11	0.97	10	1.00	3.23
			120				51/27	0.43/.23	0.99/.98	10	1.00	1.96/3.7
	CFQ26W/G24q	2 or 1 lamp	277				51/27	0.19/.1	0.99/.98	10	1.00	1.96/3.7
			120				54/29	0.45/.24	0.99	10	1/1.1	1.85/3.79
	CFTR26W/GX24q	2 or 1 lamp	277				54/29	0.2/.11	0.99/.98	10	1/1.1	1.85/3.79
			120				46	0.38	0.98	10	0.98	2.13
	CFTR42W/GX24q	1	277				46	0.17	0.98	10	0.98	2.13
			120				36	0.31	0.98	10	0.98	2.72
	CFTR32W/GX24q	1	277				36	0.13	0.98	10	0.98	2.72
			120				51	0.04	0.99	10	1.12	2.20
	CFS21W/GR10q	2	277				51	0.18	0.99	10	1.12	2.20
			120				36	0.30	0.99	10	0.93	2.58
	FT18W/2G11	2	277				36	0.13	0.97	12	0.93	2.58
			120				48	0.41	0.99	10	0.93	1.94
	FT24W/2G11	2	277				48	0.18	0.9	10	0.93	1.94
			120				51	0.44	0.99	10	1.00	1.96
	F24T5 HO	2	277				51	0.19	0.98	10	1.00	1.96
			120				43	0.36	0.99	10	1.00	2.33
GEC226-MVPS-xx	FC16T9 40W	1	277	63099	63098	63099	43	0.16	0.97	10	1.00	2.33
			120				94/47	0.77/.4	1.00	10	1.00	1.14/2.13
	CFTR42W/GX24q	2 or 1 lamp	277				93/47	0.38/.18	1.00	10	1.00	1.08/2.13
			120				63/42	0.53/.35	0.95/.96	10	0.95/.96	1.51/2.29
	CFTR32W/GX24q	2 or 1 lamp	277				63/42	0.23/.13	0.95/.96	12	0.95/.96	1.51/2.29
	CFQ26W/G24q		120				54/32	0.45/.27	0.9/1.0	10	0.9/1.0	1.67/3.12
	CFTR26W/GX24q	2 or 1 lamp	277				54/32	0.21/.13	0.9/1.0	12	0.9/1.0	1.67/3.12
			120				63/33	0.52/.27	0.78/.8	10	0.78/.8	1.25/2.45
	CFM36W/2G10	2 or 1 lamp	277				62/33	0.23/.13	0.79/.80	10/15	0.79/.8	1.27/2.44
			120				82/45	0.69/.37	0.95/1.0	10	0.95/1.0	1.16/2.22
	FT39W/2G11	2 or 1 lamp	277				82/45	0.3/.17	0.95/1.0	10/12	0.95/1.0	1.16/2.22
			120				70/37	0.59/.31	0.8/.84	10	0.8/.84	1.13/2.24
	FC12T5 40W	2 or 1 lamp	277				70/37	0.26.14	0.81/.84	10/15	0.81/.84	1.15/2.24
			120				52/28	0.44/.23	1.10	10	1.10	2.11/3.97
	FC9T6 22W	2 or 1 lamp	277				52/28	0.19/.11	1.1/1.11	12	1.1/1.11	2.11/3.92
			120				58	0.49	1.00	10	1.00	1.72
	CFTR57W/GX24q	1	277				58	0.22	1.00	12	1.00	1.72
			120				73	0.61	1.00	10	1.00	1.37
	CFTR70W/GX24q	1	277				73	0.27	1.00	12	1.00	1.37
			120				43	0.36	0.71	10	0.71	1.65
	FT55W/2G11	1	277				44	0.16	0.72	12	0.72	1.66
			120				82/45	0.69/.37	0.95/1.00	10	0.95/1.00	1.16/2.22
	FT40W/2G11	2 or 1 lamp	277				82/45	0.3/.17	0.95/1.00	10/12	0.95/1.00	1.16/2.22
			120				63/33	0.52/.27	0.78/.80	10	0.78/.80	1.25/2.45
	FT36W/2G11	2 or 1 lamp	277				62/33	0.23/.13	0.79/.80	10/15	0.79/.8	1.27/2.44
			120				54/26	0.45/.22	1/.92	10	1/.92	1.85/3.56
	FT24W/2G11	2 or 1 lamp	277				54/27	0.2/.1	1/.92	12/15	1/.92	1.85/3.48
			120				60/34	0.5/.29	0.95/1.0	10	0.95/1	1.6/2.94
	CFS28W/GR10q	2 or 1 lamp	277				60/34	0.22/.14	0.97/1.00	10/15	0.97/1.0	1.62/2.94
			120				67	0.55	0.90	10	0.90	1.34
	FC9T5+FC12T5	1+1	277				67	0.25	0.90	10	0.90	1.34
			120				33	0.28	0.49	10	0.49	1.48
GEC242-MPVS-xx	CFS55W/GRY10Q-3	1	277	63101	63102	63100	32	0.13	0.49	10	0.49	1.53

See page E-1 for warranty information.

ProLine® CFL Electronic Ballasts
Compact Fluorescent Ballasts For 13 – 70W T4 CFL Lamps

63091 – GEC213-MVPS-BES
63092 – GEC213-MVPS-SE
63089 – GEC213-MVPS-3W

ProLine® CFL Electronic Ballasts

2 or 1 – CFQ13W/G24q 120-227V ProLine® PS

- Multi-voltage technology means a single ballast handles voltage from 108V to 305V
- Programmed starting for extended lamp life
- End-of-Lamp-Life protection
- Color coded poke-in connectors simplifies wiring

General characteristics

Ballast Type	Electronic – Program / Rapid Start
Starting Method	Programmed start
Lamp Wiring	Series
Line Voltage Regulation (+/-)	10%
Ambient Temperature (MAX)	104°F (40°C)
Case Temperature (MAX)	70 °C (158 °F)
Ballast Factor	Normal
Power Factor Correction	Active
Sound Rating	A (20-24 decibels)
Additional Info	End-of-Life Protection (EOL), Thermally protected, Universal voltage

Electrical characteristics

Supply Current Frequency	50 Hz/60 Hz

Order information

10 Pack	Pallet Pack	DIY Pack	IP Pack
63089, 63092, 63091			

Dimensions

Wiring diagram – CFL 1-2 – see example on page 17-15

Case dimensions – Ref Drawing -13 – see page 17-17

Physical Parameters	3W	BES	SE
Length (L)	5.0 in (127 mm)	4.26 in (107 mm)	5.0 in (127 mm)
Width (W)	2.4 in (61 mm)	2.4 in (61 mm)	2.4 in (61 mm)
Height (H)	1.0 in (25 mm)	1.0 in (25 mm)	1.0 in (25 mm)
Mounting dimensions			
Bracket Length (BL)			
Mount Length (M)	4.63 in (118 mm)		
Mount Width (X or F)	2.4 in (61 mm)		
Mount Slots (MS)			
Weight	0.381 lbs	0.423 lbs	0.395 lbs
Exit Type	Dual Entry (SE/BE, BES, 3W)		
Remote Mounting Distance to Lamp	20 ft		
Remote Mounting Wire Gauge	18 AWG		

Specifications by lamp and wattage

Lamp	# of Lamps	Line Volts	System Watts	Nom. Line Current	System Ballast Factor	Ballast Efficacy Factor	Power Factor % (>=)	Crest Factor (<=)	TQH % (<=)	Min. Starting Temp (°F/°C)
	2	120	32	0.26 A	1.04	3.30	99	1.7	10	-20 / -29
	2	277	32	0.12 A	1.04	3.30	96	1.7	10	-20 / -29
	1	120	15	0.19 A	1.09	7.30	99	1.7	10	-20 / -29
CFQ13W/G24q	1	277	15	0.06 A	1.09	7.30	89	1.7	18	-20 / -29
	2	120	32	0.27 A	1.07	3.30	99	1.7	10	-20 / -29
	2	277	32	0.12 A	1.07	3.30	96	1.7	10	-20 / -29
	1	120	16	0.13 A	1.10	6.90	99	1.7	10	-20 / -29
CFTR13W/GX24q	1	277	16	0.07 A	1.10	6.90	88	1.7	18	-20 / -29
	2	120	26	0.22 A	1.06	4.10	99	1.7	10	-20 / -29
	2	277	25	0.10 A	1.06	4.20	94	1.7	11	-20 / -29
	1	120	13	0.10 A	1.09	8.40	99	1.7	10	-20 / -29
CFS10W/GR10q	1	277	13	0.07 A	1.09	8.40	84	1.7	21	-20 / -29
	1	120	19	0.16 A	0.99	5.20	99	1.7	10	-20 / -29
CFQ18W/G24q	1	277	19	0.07 A	0.99	5.20	89	1.7	16	-20 / -29
	1	120	19	0.16 A	0.96	5.10	99	1.7	10	-20 / -29
CFTR18W/GX24q	1	277	19	0.08 A	0.96	5.10	88	1.7	15	-20 / -29
	1	120	17	0.14 A	1.00	5.90	99	1.7	10	-20 / -29
CFS16W/GR10q	1	277	17	0.07 A	1.00	5.90	90	1.7	16	-20 / -29

Safety and performance FCC Part 18 Class B UL Class P UL Type 1 Outdoor No PCB's ANSI Standard C82.11-Cons 2002 ANSI Standard C62.41-1991

See page E-1 for warranty information.

ProLine® CFL Electronic Ballasts

Compact Fluorescent Ballasts For 13 – 70W T4 CFL Lamps

63094 – GEC218-MVPS-BES
63096 – GEC218-MVPS-SE
63093 – GEC218-MVPS-3W

ProLine® CFL Electronic Ballasts

2 or 1 – CFQ18W/G24q 120-227V ProLine® PS

- Multi-voltage technology means a single ballast handles voltage from 108V to 305V
- Programmed starting for extended lamp life
- End-of-Lamp-Life protection
- Color coded poke-in connectors simplifies wiring

General characteristics

Ballast Type	Electronic – Program / Rapid start
Starting Method	Programmed start
Lamp Wiring	Series
Line Voltage Regulation (+/-)	10%
Ambient Temperature (MAX)	104°F (40°C)
Case Temperature (MAX)	70°C (158 °F)
Ballast Factor	Normal
Power Factor Correction	Active
Sound Rating	A (20-24 decibels)
Additional Info	Auto-restart, Thermally protected, Universal voltage

Electrical characteristics

Supply Current Frequency	50 Hz/60 Hz

Order information

10 Pack	Pallet Pack	DIY Pack	IP Pack
63093, 63096, 63094			

Dimensions

Wiring diagram – CFL 1-2 – see example on page 17-15

Case dimensions – Ref Drawing -13 – see page 17-17

Physical Parameters	3W	BES	SE
Length (L)	5.0 in (127 mm)	4.26 in (107 mm)	5.0 in (127 mm)
Width (W)	2.4 in (61 mm)	2.4 in (61 mm)	2.4 in (61 mm)
Height (H)	1.0 in (25 mm)	1.0 in (25 mm)	1.0 in (25 mm)
Mounting dimensions			
Bracket Length (BL)			
Mount Length (M)	4.63 in (118 mm)		
Mount Width (X or F)	2.4 in (61 mm)		
Mount Slots (MS)			
Weight	0.412 lbs	0.454 lbs	0.426 lbs
Exit Type	Dual Entry (SE/BE, BES, 3W)		
Remote Mounting Distance to Lamp	20 ft		
Remote Mounting Wire Gauge	18 AWG		

Specifications by lamp and wattage

Lamp	# of Lamps	Line Volts	System Watts	Nom. Line Current	System Ballast Factor	Ballast Efficacy Factor	Power Factor % (>=)	Crest Factor (<=)	TQH % (<=)	Min. Starting Temp (°F/°C)
	2	120	43	0.35 A	1.05	2.40	99	1.7	10	-20 / -29
	2	277	42	0.15 A	1.05	2.50	96	1.7	10	-20 / -29
	1	120	21	0.17 A	1.08	5.10	99	1.7	10	-20 / -29
CFQ18W/G24q	1	277	21	0.08 A	1.08	5.10	88	1.7	15	-20 / -29
	2	120	44	0.37 A	1.04	2.40	99	1.7	10	-20 / -29
	2	277	43	0.16 A	1.04	2.40	96	1.7	10	-20 / -29
	1	120	22	0.19 A	1.07	4.90	99	1.7	10	-20 / -29
CFTR18W/GX24q	1	277	22	0.08 A	1.07	4.90	87	1.7	14	-20 / -29
	2	120	45	0.38 A	0.86	1.90	99	1.7	10	-20 / -29
	2	277	44	0.16 A	0.86	2.00	96	1.7	10	-20 / -29
	1	120	22	0.19 A	0.93	4.20	99	1.7	10	-20 / -29
CFS21W/GR10q	1	277	22	0.09 A	0.93	4.20	88	1.7	15	-20 / -29
	2	120	39	0.32 A	1.00	2.60	99	1.7	10	-20 / -29
CFS16W/GR10q	2	277	38	0.14 A	1.00	2.60	95	1.7	10	-20 / -29
	1	120	22	0.19 A	0.91	4.10	99	1.7	10	-20 / -29
CFQ26W/GX24q	1	277	22	0.09 A	0.92	4.20	89	1.7	14	-20 / -29
	1	120	26	0.21 A	0.85	3.30	99	1.7	10	-20 / -29
CFTR26W/GX24q	1	277	26	0.10 A	0.85	3.30	89	1.7	14	-20 / -29
	1	120	25	0.21 A	0.87	3.50	99	1.7	10	-20 / -29
CFS28W/GR10q	1	277	25	0.10 A	0.87	3.50	91	1.7	13	-20 / -29

Safety and performance

FCC Part 18 Class B UL Class P UL Type 1 Outdoor No PCB's ANSI Standard C82.11-Cons 2002 ANSI Standard C62.41-1991

See page E-1 for warranty information.

ProLine® CFL Electronic Ballasts
Compact Fluorescent Ballasts For 13 – 70W T4 CFL Lamps

63098 – GEC226-MVPS-BES
63099 – GEC226-MVPS-SE
63097 – GEC226-MVPS-3W

ProLine® CFL Electronic Ballasts

2 – CFQ26W, FT24 or 1 – 24W CFTR32 120-227V ProLine® PS

- Multi-voltage technology means a single ballast handles voltage from 108V to 305V
- Programmed starting for extended lamp life
- End-of-Lamp-Life protection
- Color coded poke-in connectors simplifies wiring

General characteristics

Ballast Type	Electronic – Program / Rapid start
Starting Method	Programmed start
Lamp Wiring	Series
Line Voltage Regulation (+/-)	10%
Ambient Temperature (MAX)	104°F (40°C)
Case Temperature (MAX)	75°C (167°F)
Ballast Factor	Normal
Power Factor Correction	Active
Sound Rating	A (20-24 decibels)
Additional Info	Auto restart, Thermally protected, Universal voltage

Electrical characteristics

Supply Current Frequency	50 Hz/60 Hz

Order information

10 Pack	Pallet Pack	DIY Pack	IP Pack
63098, 63099, 63097			

Dimensions

Wiring diagram – CFL 1-2 – see example on page 17-15

Case dimensions – Ref Drawing -13 – see page 17-17

Physical Parameters	3W	BES	SE
Length (L)	5.0 in (127 mm)	4.26 in (107 mm)	5.0 in (127 mm)
Width (W)	2.4 in (61 mm)	2.4 in (61 mm)	2.4 in (61 mm)
Height (H)	1.0 in (25 mm)	1.0 in (25 mm)	1.0 in (25 mm)
Mounting dimensions			
Bracket Length (BL)			
Mount Length (M)	4.63 in (118 mm)		
Mount Width (X or F)	2.4 in (61 mm)		
Mount Slots (MS)			
Weight	0.419 lbs	0.461 lbs	0.434 lbs
Exit Type	Dual Entry (SE/BE, BES, 3W)		
Remote Mounting Distance to Lamp	12 ft		
Remote Mounting Wire Gauge	18 AWG		

Specifications by lamp and wattage

Lamp	# of Lamps	Line Volts	System Watts	Nom. Line Current	System Ballast Factor	Ballast Efficacy Factor	Power Factor % (>=)	Crest Factor (<=)	TQH % (<=)	Min. Starting Temp (°F/°C)
	2	120	56	0.47 A	1.02	1.82	99	1.7	10	-20 / -29
	2	277	54	0.20 A	1.02	1.89	97	1.7	11	-20 / -29
	1	120	30	0.25 A	1.04	3.47	99	1.7	10	-20 / -29
CFQ26W/G24q	1	277	30	0.12 A	1.04	3.47	93	1.7	13	-20 / -29
	2	120	64	0.53 A	0.97	1.52	99	1.7	10	-20 / -29
	2	277	64	0.23 A	0.88	1.38	97	1.7	12	-20 / -29
	1	120	32	0.26 A	10.01	3.16	99	1.7	10	-20 / -29
CFTR26W/GX24q	1	277	32	0.12 A	1.00	3.16	94	1.7	13	-20 / -29
	2	120	56	0.47 A	1.12	2.00	99	1.7	10	-20 / -29
CFS21W/GR10q	2	277	55	0.20 A	1.11	2.02	96	1.7	11	-20 / -29
	1	120	51	0.42 A	0.92	1.80	99	1.7	10	-20 / -29
CFTR42W/GX24q	1	277	50	0.18 A	0.92	1.84	97	1.7	12	-20 / -29
	1	120	39	0.33 A	1.24	3.18	99	1.7	10	-20 / -29
CFTR32W/GX24q	1	277	39	0.15 A	1.23	3.15	95	1.7	13	-20 / -29
	1	120	40	0.33 A	0.89	2.23	99	1.7	10	-20 / -29
FC16T9 40W	1	277	40	0.14 A	0.94	2.35	95	1.7	13	-20 / -29
	1	120	27	0.23 A	1.04	3.85	99	1.7	10	-20 / -29
FT24W/2G11	1	277	27	0.11 A	1.10	4.07	91	1.7	14	-20 / -29
	1	120	35	0.29 A	0.94	2.69	99	1.7	10	-20 / -29
FT36W/2G11	1	277	35	0.13 A	0.94	2.69	94	1.7	13	-20 / -29
	1	120	33	0.27 A	0.97	2.94	99	1.7	10	-20 / -29
FT39W/2G11	1	277	33	0.12 A	0.98	2.97	94	1.7	14	-20 / -29

Safety and performance FCC Part 18 Class B UL Class P UL Type 1 Outdoor No PCB's ANSI Standard C82.11-Cons 2002 ANSI Standard C62.41-1991

See page E-1 for warranty information.

ProLine® CFL Electronic Ballasts

Compact Fluorescent Ballasts For 13 – 70W T4 CFL Lamps

63101 – GEC242-MVPS-BES (replaces 47506)
63102 – GEC242-MVPS-SE (replaces 47509)
63100 – GEC242-MVPS-3W

ProLine® CFL Electronic Ballasts

2 – 42/36/32/28/26/24 watt 120-277V Proline® PS

- Electronic compact fluorescent ballasts for all general fluorescent applications
- Low-profile case

General characteristics

Ballast Type	Electronic – Program / Rapid start
Starting Method	Programmed start
Lamp Wiring	Series
Line Voltage Regulation (+/-)	10%
Ambient Temperature (MAX)	122°F (50°C)
Case Temperature (MAX)	75°C (167°F)
Ballast Factor	Normal
Power Factor Correction	Active
Sound Rating	A (20-24 decibels)
Additional Info	Auto restart, Thermally protected, Universal voltage

Electrical characteristics

Supply Current Frequency	50 Hz/60 Hz

Order information

10 Pack	Pallet Pack	DIY Pack	IP Pack
63101, 63102, 63100			

Dimensions

Wiring diagram – CFL 1-2 – see example on page 17-15	
Case dimensions – Ref Drawing 13 – see page 17-17	
Length (L)	5 in (127 mm)
Width (W)	3.0 in (76 mm)
Height (H)	1.38 in (35 mm)
Mounting dimensions	
Bracket Length (BL)	4.63 in (118 mm)
Mount Length (M)	
Mount Width (X or F)	
Mount Slots (MS)	
Weight	0.90 lbs
Exit Type	Dual Entry (SE/BE, BES, 3W)

Specifications by lamp and wattage

Lamp	# of Lamps	Line Volts	System Watts	Nom. Line Current	System Ballast Factor	Ballast Efficacy Factor	Power Factor % (>=)	Crest Factor (<=)	THD (<=)	Min. Starting Temp (°F/°C)
	2	120	94	0.77 A	1.00	1.14	0.99	1.7	10	0/-18
	2	277	93	0.38 A	1.00	1.08	0.98	1.7	10	0/-18
	1	120	47	0.40 A	1.00	2.13	0.99	1.7	10	0/-18
CFTR42W/GX24q	1	277	47	0.18 A	1.00	2.13	0.96	1.7	10	0/-18
	2	120	63	0.53 A	0.95	1.51	0.99	1.7	10	0/-18
	2	277	63	0.23 A	0.95	1.51	0.98	1.7	12	0/-18
	1	120	42	0.35 A	0.96	2.29	0.99	1.7	10	0/-18
CFTR32W/GX24q	1	277	42	0.13 A	0.96	2.29	0.96	1.7	12	0/-18
	2	120	54	0.45 A	0.90	1.67	0.99	1.7	10	0/-18
CFQ26W/G24q,	2	277	54	0.21 A	0.90	1.67	0.97	1.7	12	0/-18
CFTR26W/	1	120	32	0.27 A	1.00	3.12	0.99	1.7	10	0/-18
GX24q	1	277	32	0.13 A	1.00	3.12	0.95	1.7	12	0/-18
	2	120	63	0.52 A	0.78	1.25	0.99	1.7	10	0/-18
	2	277	62	0.23 A	0.79	1.27	0.98	1.7	10	0/-18
	1	120	33	0.27 A	0.80	2.45	0.99	1.7	10	0/-18
CFM36W/2G10	1	277	33	0.13 A	0.80	2.44	0.94	1.7	15	0/-18
	2	120	82	0.69 A	0.95	1.16	0.99	1.7	10	0/-18
	2	277	82	0.30 A	0.95	1.16	0.98	1.7	10	0/-18
	1	120	45	0.37 A	1.00	2.22	0.99	1.7	10	0/-18
FT39W/2G11	1	277	45	0.17 A	1.00	2.22	0.96	1.7	12	0/-18
	2	120	70	0.59 A	0.80	1.13	0.99	1.7	10	0/-18
	2	277	70	0.26 A	0.81	1.15	0.98	1.7	10	0/-18
	1	120	37	0.31 A	0.84	2.24	0.99	1.7	10	0/-18
FC12T5 40W	1	277	37	0.14 A	0.84	2.24	0.95	1.7	15	0/-18
	2	120	52	0.44 A	1.10	2.11	0.99	1.7	10	0/-18
	2	277	52	0.19 A	1.10	2.11	0.97	1.7	12	0/-18
	1	120	28	0.23 A	1.10	3.97	0.99	1.7	10	0/-18
FC9T5 22W	1	277	28	0.11 A	1.11	3.92	0.93	1.7	12	0/-18
	1	120	58	0.49 A	1.0	1.72	0.99	1.7	10	0/-18
CFTR57W/GX24q	1	277	58	0.22 A	1.0	1.72	0.97	1.7	12	0/-18
	1	120	73	0.61 A	1.0	1.37	0.99	1.7	10	0/-18
CFTR70W/GX24q	1	277	73	0.27 A	1.0	1.37	0.97	1.7	12	0/-18
	1	120	43	0.36 A	0.71	1.65	0.99	1.7	10	0/-18
FT55W/2G11	1	277	44	0.16 A	0.72	1.66	0.96	1.7	12	0/-18
	2	120	82	0.69 A	0.95	1.16	0.99	1.7	10	0/-18
	2	277	82	0.30 A	0.95	1.16	0.98	1.7	10	0/-18
	1	120	45	0.37 A	1.00	2.22	0.99	1.7	10	0/-18
FT40W/2G11	1	277	45	0.17 A	1.00	2.22	0.96	1.7	12	0/-18
	2	120	63	0.52 A	0.78	1.25	0.99	1.7	10	0/-18
	2	277	62	0.23 A	0.79	1.27	0.98	1.7	10	0/-18
	1	120	33	0.27 A	0.80	2.45	0.99	1.7	10	0/-18
FT36W/2G11	1	277	33	0.13 A	0.80	2.44	0.94	1.7	15	0/-18
	2	120	54	0.45 A	1.00	1.85	0.99	1.7	10	0/-18
	2	277	54	0.20 A	1.00	1.85	0.97	1.7	12	0/-18
	1	120	26	0.22 A	0.92	3.56	0.99	1.7	10	0/-18
FT24W/2G11	1	277	27	0.10 A	0.92	3.48	0.92	1.7	15	0/-18
	2	120	60	0.50 A	0.95	1.60	0.99	1.7	10	0/-18
	2	277	60	0.22 A	0.97	1.62	0.98	1.7	10	0/-18
	1	120	34	0.29 A	1.00	2.94	0.99	1.7	10	0/-18
CFS28W/GR10q	1	277	34	0.14 A	1.00	2.94	0.93	1.7	15	0/-18
	1+1	120	67	0.55 A	0.90	1.34	0.99	1.7	10	0/-18
FC9T5+FC12T5	1+1	277	67	0.25 A	0.90	1.34	0.98	1.7	10	0/-18
CFS55W/	1	120	33	0.28 A	0.49	1.48	0.99	1.7	10	0/-18
GRY10q-3	1	277	32	0.13 A	0.49	1.53	0.94	1.7	10	0/-18

Safety and performance

FCC Part 18 Class B at 120 volts UL Class P UL Listed cUL

See page E-1 for warranty information.

High-Lumen Biax® UltraMax® Instant Start
Compact Fluorescent Ballasts

75948 – GEC140MAX-A

High-Lumen Biax® UltraMax® Instant Start

1 – FT40W-25W/2G11 Biax - 120-277V UltraMax® Instant Start

- Electronic compact fluorescent ballasts for all general fluorescent applications
- Low-profile case
- Multi-Voltage technology handles voltage from 120 to 277V
- Instant start electronic ballast for long lamp starting cycles and low initial cost
- Anti-Striation Control for better light quality, with no striations
- Lamp End-of-Life Safety Shutdown Circuit with Re-Lamping Auto-reset

General characteristics

Ballast Type	Electronic – Standard Instant Start
Starting Method	Instant start
Lamp Wiring	
Line Voltage Regulation (+/-)	10%
Ambient Temperature (MAX)	105°F (41°C)
Case Temperature (MAX)	70 °C (158 °F)
Ballast Factor	Normal
Power Factor Correction	Active
Sound Rating	A (20-24 decibels)
Additional Info	End-of-Life Protection (EOL), Thermally protected

Electrical characteristics

Supply Current Frequency	50 Hz /60 Hz

Order information

10 Pack	Pallet Pack	DIY Pack	IP Pack
75948			

Dimensions

Wiring diagram – CFL IS1 – see example on page 17-16	
Case dimensions – Ref Drawing -A – see page 17-17	
Length (L)	9.5 in (241 mm)
Width (W)	1.7 in (43 mm)
Height (H)	1.18 in (30 mm)
Mounting dimensions	
Bracket Length (BL)	
Mount Length (M)	8.9 in (226 mm)
Mount Width (X or F)	1.18 in (30 mm)
Mount Slots (MS)	0.3 in (8 mm)
Weight	1.40 lbs
Exit Type	Side
Remote Mounting Distance to Lamp	10 ft
Remote Mounting Wire Gauge	18 AWG
Lead lengths	**Length (± 1 in)**
Blue	31 in (787 mm)
Red	31 in (787 mm)
White	25 in (635 mm)
Black	25 in (635 mm)

Specifications by lamp and wattage

Lamp	# of Lamps	Line Volts	System Watts	Nom. Line Current	Ballast Factor	Power Factor % (>=)	Crest Factor (<=)	THD (<=)	Min. Starting Temp (°F/°C)
	1	120	38	0.32 A	0.90	99	1.7	10	0/-18
FT40W/4P	1	277	38	0.14 A	0.90	95	1.7	10	0/-18
	1	120	34	0.29 A	1.00	99	1.7	10	0/-18
FT40W/28W/4P	1	277	34	0.13 A	1.00	95	1.7	10	0/-18
	1	120	31	0.25 A	1.00	99	1.7	10	0/-18
FT40W/25W/4P	1	277	31	0.12 A	1.00	90	1.7	10	0/-18
	1	120	33	0.27 A	0.94	99	1.7	10	0/-18
F32T8	1	277	33	0.13 A	0.94	95	1.7	10	0/-18
	1	120	36	0.30 A	1.10	99	1.7	10	0/-18
F28T5/HE	1	277	36	0.14 A	1.10	95	1.7	10	0/-18

Safety and performance

UL Type 1 Outdoor UL Type HL FCC – CLASS A Non-Consumer UL Class P CSA UL Listed

See page E-1 for warranty information.

High-Lumen Biax® UltraMax® Instant Start
Compact Fluorescent Ballasts

71435 – GEC240MAX-A

High-Lumen Biax® UltraMax® Instant Start

2 or 1 – FT40W-25W/2G11 Biax - 120-277V UltraMax® Instant Start

- Electronic compact fluorescent ballasts for all general fluorescent applications
- Low-profile case
- Multi-Voltage technology handles voltage from 120 to 277V
- Energy saving, high efficiency instant start electronic ballast (> 90%)
- Instant start electronic ballast for long lamp starting cycles and low initial cost
- Anti-Striation Control for better light quality, with no striations
- Lamp End-of-Life Safety Shutdown Circuit with Re-Lamping Auto-reset

General characteristics

Ballast Type	Electronic – High Efficiency Instant Start
Starting Method	Instant start
Lamp Wiring	Parallel
Line Voltage Regulation (+/-)	10%
Ambient Temperature (MAX)	105°F (41°C)
Case Temperature (MAX)	70 °C (158 °F)
Ballast Factor	Normal
Power Factor Correction	Active
Sound Rating	A (20-24 decibels)
Additional Info	End-of-Life Protection (EOL), Thermally protected

Electrical characteristics

Supply Current Frequency	50 Hz /60 Hz

Order information

10 Pack	Pallet Pack	DIY Pack	IP Pack
71435			

Dimensions

Wiring diagram – CFL IS2 – see example on page 17-16	
Case dimensions – Ref Drawing -A – see page 17-17	
Length (L)	9.5 in (241 mm)
Width (W)	1.7 in (43 mm)
Height (H)	1.18 in (30 mm)
Mounting dimensions	
Bracket Length (BL)	
Mount Length (M)	8.9 in (226 mm)
Mount Width (X or F)	1.18 in (30 mm)
Mount Slots (MS)	0.3 in (8 mm)
Weight	1.40 lbs
Exit Type	Side
Remote Mounting Distance to Lamp	12 ft
Remote Mounting Wire Gauge	18 AWG
Lead lengths	**Length (± 1 in)**
Blue	31 in (787 mm)
Red	31 in (787 mm)
White	25 in (635 mm)
Black	25 in (635 mm)

Specifications by lamp and wattage

Lamp	# of Lamps	Line Volts	System Watts	Nom. Line Current	Ballast Factor	Power Factor % (>=)	Crest Factor (<=)	THD (<=)	Min. Starting Temp (°F/°C)
	2	120	69	0.58 A	0.90	99	1.7	10	0/-18
	2	277	68	0.25 A	0.90	95	1.7	10	0/-18
	1	120	42	0.35 A	1.00	99	1.7	10	0/-18
FT40W/4P	1	277	42	0.16 A	1.00	95	1.7	15	0/-18
	2	120	63	0.54 A	1.00	99	1.7	10	0/-18
	2	277	62	0.23 A	1.00	95	1.7	10	0/-18
	1	120	38	0.32 A	1.11	99	1.7	10	0/-18
FT40W/28W/4P	1	277	38	0.14 A	1.11	95	1.7	15	0/-18
	2	120	58	0.50 A	1.00	99	1.7	10	0/-18
	2	277	57	0.21 A	1.00	90	1.7	10	0/-18
	1	120	35	0.29 A	1.15	99	1.7	10	0/-18
FT40W/25W/4P	1	277	35	0.13 A	1.15	95	1.7	15	0/-18
	2	120	63	0.54 A	0.94	99	1.7	10	0/-18
	2	277	62	0.23 A	0.94	95	1.7	10	0/-18
	1	120	38	0.32 A	1.08	99	1.7	10	0/-18
F32T8	1	277	38	0.14 A	1.08	95	1.7	15	0/-18
	2	120	69	0.59 A	1.10	99	1.7	10	0/-18
	2	277	68	0.25 A	1.10	95	1.7	10	0/-18
	1	120	41	0.35 A	1.26	99	1.7	10	0/-18
F28T5/HE	1	277	41	0.15 A	1.26	95	1.7	15	0/-18

Safety and performance

UL Type 1 Outdoor UL Type HL FCC – CLASS A Non-Consumer UL Class P CSA UL Listed

See page E-1 for warranty information.

High-Lumen Biax® UltraMax® Instant Start
Compact Fluorescent Ballasts

71436 – GEC340MAX-A

High-Lumen Biax® UltraMax® Instant Start

3 – FT40W-25W/2G11 Biax - 120-277V UltraMax® Instant Start

- Electronic compact fluorescent ballasts for all general fluorescent applications
- Low-profile case
- Multi-Voltage technology handles voltage from 120 to 277V
- Energy saving, high efficiency instant start electronic ballast (> 90%)
- Instant start electronic ballast for long lamp starting cycles and low initial cost
- Anti-Striation Control for better light quality, with no striations
- Lamp End-of-Life Safety Shutdown Circuit with Re-Lamping Auto-reset

General characteristics

Ballast Type	Electronic – High Efficiency Instant Start
Starting Method	Instant start
Lamp Wiring	Parallel
Line Voltage Regulation (+/-)	10%
Ambient Temperature (MAX)	105°F (41°C)
Case Temperature (MAX)	70 °C (158 °F)
Ballast Factor	Normal
Power Factor Correction	Active
Sound Rating	A (20-24 decibels)
Additional Info	End-of-Life Protection (EOL), Thermally protected

Electrical characteristics

Supply Current Frequency	50 Hz /60 Hz

Order information

10 Pack	Pallet Pack	DIY Pack	IP Pack
71436			

Dimensions

Wiring diagram – CFL IS3– see example on page 17-16	
Case dimensions – Ref Drawing -A – see page 17-17	
Length (L)	9.5 in (241 mm)
Width (W)	1.7 in (43 mm)
Height (H)	1.18 in (30 mm)
Mounting dimensions	
Bracket Length (BL)	
Mount Length (M)	8.9 in (226 mm)
Mount Width (X or F)	1.18 in (30 mm)
Mount Slots (MS)	0.3 in (8 mm)
Weight	1.40 lbs
Exit Type	Side
Remote Mounting Distance to Lamp	12 ft
Remote Mounting Wire Gauge	18 AWG
Lead lengths	**Length (± 1 in)**
Blue	31 in (787 mm)
Red	31 in (787 mm)
White	25 in (635 mm)
Black	25 in (635 mm)

Specifications by lamp and wattage

Lamp	# of Lamps	Line Volts	System Watts	Nom. Line Current	Ballast Factor	Power Factor % (>=)	Crest Factor (<=)	THD (<=)	Min. Starting Temp (°F/°C)
	3	120	100	0.86 A	0.90	99	1.7	10	0/-18
	3	277	99	0.36 A	0.90	99	1.7	10	0/-18
	2	120	76	0.65 A	0.98	99	1.7	10	0/-18
FT40W/4P	2	277	75	0.27 A	0.98	95	1.7	10	0/-18
	3	120	93	0.79 A	1.00	99	1.7	10	0/-18
	3	277	91	0.33 A	1.00	95	1.7	10	0/-18
	2	120	70	0.59 A	1.07	99	1.7	10	0/-18
FT40W/28W/4P	2	277	69	0.25 A	1.07	95	1.7	10	0/-18
	3	120	85	0.73 A	1.00	99	1.7	10	0/-18
	3	277	84	0.31 A	1.00	95	1.7	10	0/-18
	2	120	64	0.53 A	1.11	99	1.7	10	0/-18
FT40W/25W/4P	2	277	63	0.23 A	1.11	95	1.7	10	0/-18
	3	120	92	0.78 A	0.94	99	1.7	10	0/-18
	3	277	90	0.33 A	0.94	95	1.7	10	0/-18
	2	120	69	0.59 A	1.03	99	1.7	10	0/-18
F32T8	2	277	68	0.25 A	1.03	95	1.7	10	0/-18
	3	120	102	0.87 A	1.10	99	1.7	10	0/-18
	3	277	100	0.37 A	1.10	99	1.7	10	0/-18
	2	120	76	0.66 A	1.19	99	1.7	10	0/-18
F28T5/HE	2	277	75	0.28 A	1.19	95	1.7	10	0/-18

Safety and performance

UL Type 1 Outdoor UL Type HL FCC – CLASS A Non-Consumer UL Class P CSA UL Listed

See page E-1 for warranty information.

High-Lumen Biax® UltraStart® Programmed Start
Compact Fluorescent Ballasts

71437 – GEC240MVPS-A

High-Lumen Biax® UltraStart® Programmed Start for 40W

2 or 1 – FT40W/2G11 Biax - 120-277V UltraStart® Programmed Start

- Electronic compact fluorescent ballasts for all general fluorescent applications
- Low-profile case
- Multi-Voltage technology handles voltage from 120 to 277V
- A new generation of ultra-efficient Programmed Start ballasts (> 90% efficiency)
- Parallel Lamp Operation keeps lights on when one lamp fails
- Anti-Striation Control for better light quality, with no striations
- Lamp End-of-Life Safety Shutdown Circuit with Re-Lamping Auto-reset
- Starting time visually the same as instant start

General characteristics

Ballast Type	Electronic – Program / Rapid Start
Starting Method	Programmed start
Lamp Wiring	Parallel
Line Voltage Regulation (+/-)	10%
Ambient Temperature (MAX)	105°F (41°C)
Case Temperature (MAX)	70 °C (158 °F)
Ballast Factor	Normal
Power Factor Correction	Active
Sound Rating	A (20-24 decibels)
Additional Info	Auto-restart, Thermally protected, Universal voltage

Electrical characteristics

Supply Current Frequency	50 Hz /60 Hz

Order information

10 Pack	Pallet Pack	DIY Pack	IP Pack
71437			

Dimensions

Wiring diagram – CFL PS2 – see example on page 17-16	
Case dimensions – Ref Drawing -A – see page 17-17	
Length (L)	9.5 in (241 mm)
Width (W)	1.7 in (43 mm)
Height (H)	1.18 in (30 mm)
Mounting dimensions	
Bracket Length (BL)	
Mount Length (M)	8.9 in (226 mm)
Mount Width (X or F)	1.18 in (30 mm)
Mount Slots (MS)	0.3 in (8 mm)
Weight	1.40 lbs
Exit Type	Side
Remote Mounting Distance to Lamp	12 ft
Remote Mounting Wire Gauge	18 AWG
Lead lengths	**Length (± 1 in)**
Black	25 in (635 mm)
Blue and Red	33 in (838 mm)
Yellow	33 in (838 mm)
White	25 in (635 mm)

Specifications by lamp and wattage

Lamp	# of Lamps	Line Volts	System Watts	Nom. Line Current	Ballast Factor	Power Factor % (>=)	Crest Factor (<=)	THD (<=)	Min. Starting Temp (°F/°C)
	2	120	70	0.59 A	0.90	99	1.7	10	0/-18
	2	277	69	0.25 A	0.90	95	1.7	10	0/-18
	1	120	42	0.36 A	1.04	99	1.7	10	0/-18
FT40W/4P	1	277	42	0.17 A	1.04	95	1.7	15	0/-18

Safety and performance UL Type 1 Outdoor UL Type HL FCC – CLASS A Non-Consumer UL Class P CSA UL Listed

75950 – GEC225MVPS-A

High-Lumen Biax® UltraStart® Programmed Start for 25W and 28W

2 or 1 – FT25W/2G11 Biax - 120-277V UltraStart® Programmed Start

- Electronic compact fluorescent ballasts for all general fluorescent applications
- Low-profile case
- Multi-Voltage technology handles voltage from 120 to 277V
- A new generation of ultra-efficient Programmed Start ballasts (> 90% efficiency)
- Parallel Lamp Operation keeps lights on when one lamp fails
- Anti-Striation Control for better light quality, with no striations
- Lamp End-of-Life Safety Shutdown Circuit with Re-Lamping Auto-reset

General characteristics

Ballast Type	Electronic – Program / Rapid Start
Starting Method	Programmed start
Lamp Wiring	Parallel
Line Voltage Regulation (+/-)	10%
Ambient Temperature (MAX)	105°F (41°C)
Case Temperature (MAX)	70 °C (158 °F)
Ballast Factor	Normal
Power Factor Correction	Active
Sound Rating	A (20-24 decibels)
Additional Info	Auto-restart, Thermally protected, Universal voltage

Electrical characteristics

Supply Current Frequency	50 Hz /60 Hz

Order information

10 Pack	Pallet Pack	DIY Pack	IP Pack
75950			

Dimensions

Wiring diagram – CFL PS2 – see example on page 17-16	
Case dimensions – Ref Drawing -A – see page 17-17	
Length (L)	9.5 in (241 mm)
Width (W)	1.7 in (43 mm)
Height (H)	1.18 in (30 mm)
Mounting dimensions	
Bracket Length (BL)	
Mount Length (M)	8.9 in (226 mm)
Mount Width (X or F)	1.18 in (30 mm)
Mount Slots (MS)	0.3 in (8 mm)
Weight	1.40 lbs
Exit Type	Side
Remote Mounting Distance to Lamp	10 ft
Remote Mounting Wire Gauge	18 AWG
Lead lengths	**Length (± 1 in)**
Black	25 in (635 mm)
Blue and Red	33 in (838 mm)
Yellow	33 in (838 mm)
White	25 in (635 mm)

Specifications by lamp and wattage

Lamp	# of Lamps	Line Volts	System Watts	Nom. Line Current	Ballast Factor	Power Factor % (>=)	Crest Factor (<=)	THD (<=)	Min. Starting Temp (°F/°C)
	2	120	62	0.53 A	1.00	99	1.7	10	0/-18
	2	277	61	0.23 A	1.00	95	1.7	10	0/-18
	1	120	40	0.33 A	1.17	99	1.7	10	0/-18
FT40W/28W/4P	1	277	40	0.15 A	1.17	95	1.7	15	0/-18
	2	120	57	0.48 A	1.00	99	1.7	10	0/-18
	2	277	56	0.21 A	1.00	95	1.7	10	0/-18
	1	120	36	0.30 A	1.22	99	1.7	10	0/-18
FT40W/25W/4P	1	277	36	0.14 A	1.22	95	1.7	15	0/-18

Safety and performance UL Type 1 Outdoor UL Type HL FCC – CLASS A Non-Consumer UL Class P CSA UL Listed

See page E-1 for warranty information.

87533 – GEM1CF13PH120

ProLine® CFL Magnetic Ballasts

1 – CFT/Q13W/GX23 Pre Heat 120 (4111H2P)

- Magnetic compact fluorescent ballast construction for all general fluorescent lighting

General characteristics

Ballast Type	Magnetic – Preheat
Starting Method	Preheat
Lamp Wiring	Series
Line Voltage Regulation (+/-)	5%
Ambient Temperature (MAX)	105°F (41°C)
Case Temperature (MAX)	90°C (194°F)
Ballast Factor	Normal
Power Factor Correction	
Sound Rating	A (20-24 decibels)
Additional Info	Thermally protected

Electrical characteristics

Supply Current Frequency	60 Hz

Order information

10 Pack	Pallet Pack	DIY Pack	IP Pack
87533			

Dimensions

Wiring diagram – CFL 21 – see example on page 17-15	
Case dimensions – Ref Drawing 2 – see page 17-17	
Length (L)	3.0 in (77 mm)
Width (W)	1.25 in (32 mm)
Height (H)	1.75 in (44 mm)
Mounting dimensions	
Bracket Length (BL)	3.0 in (77 mm)
Mount Length (M)	2.75 in (70 mm)
Mount Width (X or F)	
Mount Slots (MS)	0.2 in (6 mm)
Weight	0.62 lbs
Exit Type	Side
Remote Mounting Distance to Lamp	10 ft
Remote Mounting Wire Gauge	18 AWG
Lead lengths	**Length (± 1 in)**
Black	7 in (178 mm)
Black	9 in (229 mm)

Specifications by lamp and wattage

Lamp	# of Lamps	Line Volts	System Watts	Nom. Line Current	System Ballast Factor	Ballast Efficacy Factor	Power Factor % (>=)	Crest Factor (<=)	THD (<=)	Min. Starting Temp (°F/°C)
CFQ13W/2P	1	120	15	0.25 A	0.90	6.00	50	1.7	10	50 / 10
CFT13W/2P	1	120	15	0.25 A	0.90	6.00	50	1.7	10	50 / 10

Safety and performance

UL Type HL UL Class P cUL Listed UL Listed

See page E-1 for warranty information.

Wiring Diagrams
Compact Fluorescent Ballasts

CFL 21

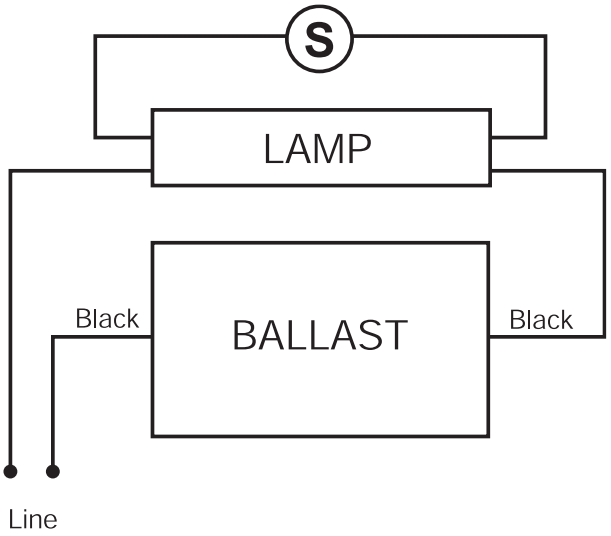

CFL 1-2

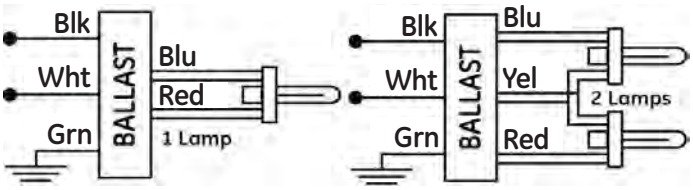

Wiring Diagrams
Compact Fluorescent Ballasts

CFL IS1

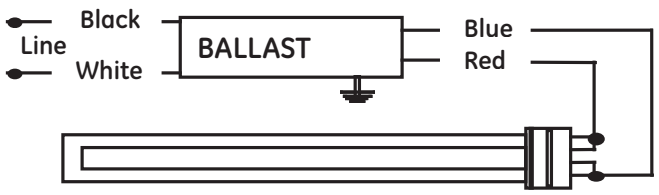

CFL IS2

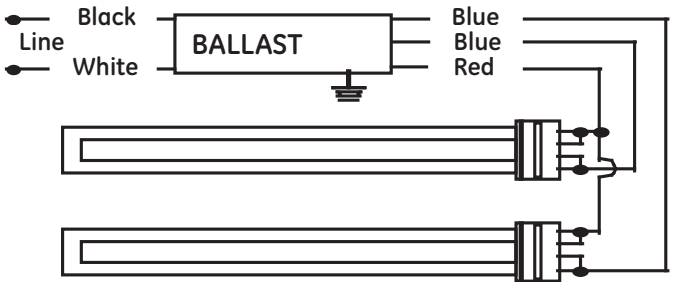

CFL IS3

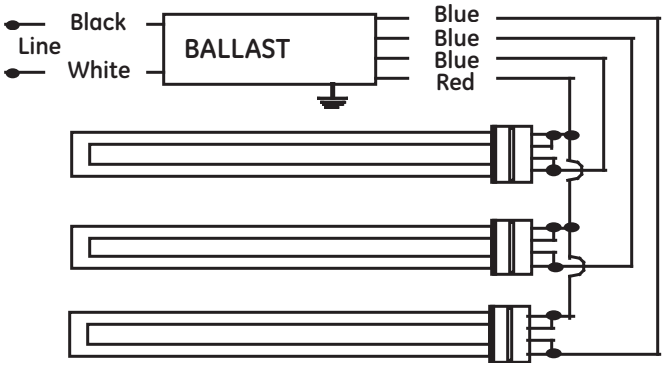

CFL PS2

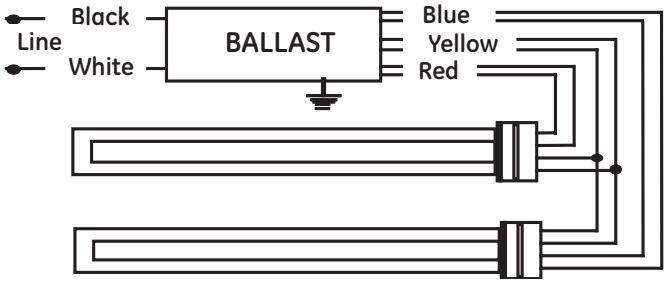

See page E-1 for warranty information.

Case Dimensions
Compact Fluorescent Ballasts

-A

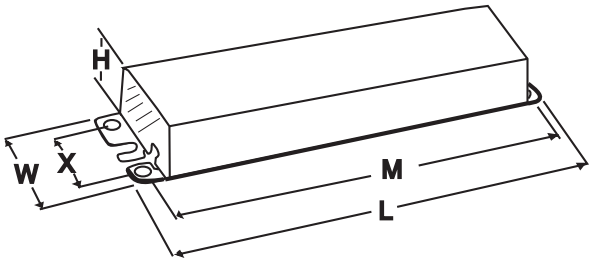

13

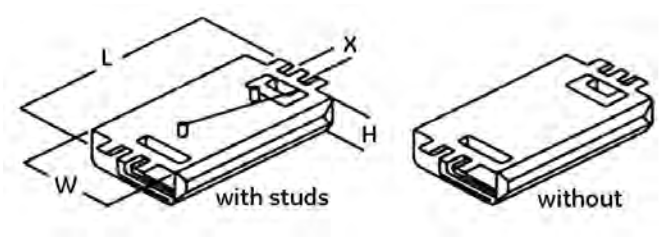

2

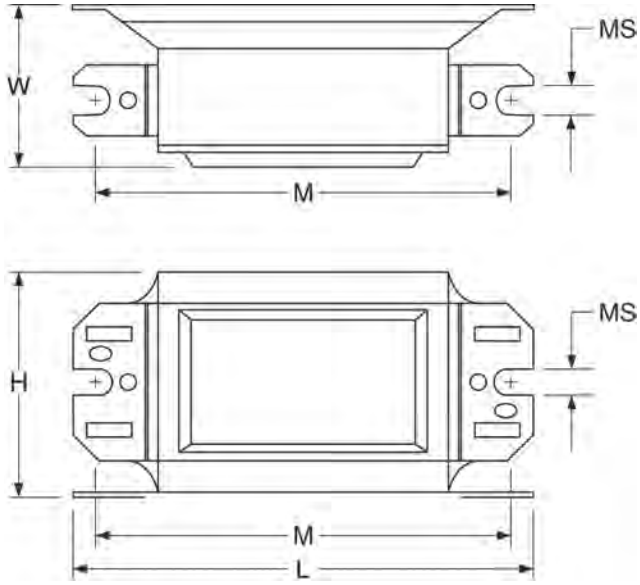

Notes

See page E-1 for warranty information.

Table of Contents
HID Electronic and Electromagnetic Ballasts

Understanding Electronic UltraMax® HID Ballasts

GE offers a complete line of electronic ballasts for HID lighting systems. Electronic HID, like ***electronic fluorescent systems that preceded it***, significantly improve the performance of HID lighting. Electronic UltraMax® eHID Ballasts use solid-state components to start and operate HID lamps. Electronic eHID ballasts use IC chips to control and give feedback for optimal performance of the lighting system. GE eHID ballasts improve the efficiency, maintain higher lumens, enhance lamp life and color control, and operate more quietly than the magnetic core and coil ballast that they replace.

GE's line of UltraCool™ UltraMax® eHID ballasts can provide up to 70% energy savings and four times the life of standard halogen. End users can meet strict watts per square foot requirements while achieving significant wattage savings and color control with ceramic metal halide lamps and GE eHID ballasts.

GE's UltraMax® eHID ballasts operate ***only pulse start and ceramic metal halide lamps***. ***GE UltraMax® eHID ballasts operate lamps at a low frequency square wave*** to maximize lamp performance. Extensive analysis of all brands of lamps suggests that the most compatible driving waveform for an electronic HID electronic ballast is a low-frequency squared wave (L.F.S.W.) with higher order harmonic content. L.F.S.W. has been established as a dependable method of ballasting low-wattage HID lamps with significant industry support. Analysis of lamp data has shown that there are limited operating bands between 1 kHz to 200 kHz in which electronic ballast could operate a lamp wattage family without causing unacceptable arc instability due to acoustic resonance. GE's UltraMax® eHID constantly measures and adjusts the wattage, optimizing the ceramic metal halide lamp performance.

GE high-wattage eHID ballasts will operate 250, 300, 320,350 or 400 watt pulse start or ceramic metal halide lamps with one ballast. The eHID Ballast with a PulseArc lamp will produce 70% more lumens per watt than the obsolete probe start magnetic core and coil system. Variable dimming to 50% power reduction is an option with GE eHID high wattage ballast.

GE Ballast HID Electronic nomenclature

G E M H 1 0 0 M S F - 1 2 0

GE Ballast
GEMH = Electronic MH

Lamp Watts

Housing
MA=Metal Housing
ML=Mini Slim
MS=Mini Square
SL=Slim Line
E=PCB board

Connector
F = Side leads w/ feet
N = Side leads no feet
J = Bottom leads w/ studs
JN = Bottom leads no studs

Voltage
120 = 120 volt
277 = 277 volt
347 = 347 volt
480 = 480 volt
MV = 120-277 volts

Pack Type
No extension = Standard
Distributor Pack
B=Bulk pack

See page E-1 for warranty information.

Understanding Electromagnetic HID Ballasts

GE offers High Intensity Discharge (HID) ballasts for mercury, probe start metal halide, pulse start metal halide and high pressure sodium lamps. Standard metal halide lamps or probe start metal halide over 150 watts, like fluorescent, are electric discharge lamps and require an open circuit voltage of nearly two times the operating voltage to the initiate the arc between the two electrodes in the arc tube. High pressure sodium, pulse start metal halide and probe start metal halide lamps 150 watts or less require an ignitor to initiate the high voltage to start the lamps. The ballasts provide the starting voltage with the igniter, where required, and provides stability for the lamp. HID lamps have negative impedance characteristics and would draw current until destruction unless a ballast was in place to regulate the current.

HID lamps take several minutes to warm-up and reach full light output. If power is interrupted between the lamp and the ballast, the arc will extinguish and lamp will go out. The lamp must cool down and reduce the vapor pressure before it will re-start. Typical warm-up and restrike times are as follows:

Light Source	Warm-Up Time	Restrike Time
Metal Halide (Probe Start)	3-4 minutes	10-20 minutes
Metal Halide (Pulse Start)	2 minutes	3-4 minutes
High Pressure Sodium	7-10 minutes	1/2-1 minute

GE HID Ballast Types

CORE AND COIL

The most common HID ballasts are the core and coil and is used in 90% of the fixture applications. Core and coil ballasts consist of one, two or three copper (or aluminum) coils on a core of electrical-grade steel laminations. HID ballasts are classified by the kind of circuit they use: Reactor (R), High Reactance autotransformer (HX), Constant Wattage Autotransformer (CWA), Regulated lag (Reg Lag) or Electronic. HID ballast are also classified as high power factor (HPF) or normal power factor (NPF).

GE HID ballast 150 watts or less have High Reactance Autotransformer circuits and high power factor (HX-HPF). GE HID ballast greater that 150 watts have Constant Wattage Autotransformer circuits and are high power factor (HPF).

CWA ballast is the most common circuit for core and coil ballast. CWA circuits provide for stable light regulation. The CWA circuit consists of a high reactance autotransformer with a capacitor in series with the lamp resulting with high power factor ballast. In most CWA ballast circuits a 10% drop in line voltage will only reduce the light output and wattage by 5%. The CWA circuit ballast requires an igniter for QMH pulse start, ceramic metal halide and HPS lamps. Igniters are also required for QMH lamps 150 watts or less.

Distributor Ballast Kits

GE stocks a comprehensive inventory of **quad and 5-tap HID voltage ballast kits**. The kits contain the appropriate core and coil, capacitor, ignitor (where required), mounting bracket, mounting hardware and instructions to allow the stocking distributor to meet the needs of their customer while minimizing their investment in component parts. The quad ballast kit has color-coded leads to identify voltages and operates at 120/208/240/277. **The 5-tap HID ballast kits also include 480-volt applications** and are listed as ML5, though GE also offers single-voltage kits for 480-volt with 120-volt taps for stand-by lighting.

Also available for metal halide and high pressure sodium applications is the **5-tap ballast-lamp replacement kit listed as -55**. This easy-to-carry, convenient, all-in-one kit, ensures ballast-lamp compatibility by including the lamp as well.

Ignitors and capacitors, where required, are included with the quad and 5-tap ballast kits.

Capacitors

Most GE capacitors and ignitors are sold in ballast kits that come pre-wired and reduce labor cost. Capacitors and ignitors are also sold separately.

Power factor capacitors are used to reduce the negative effects that inductive devices (HID ballast) have on power factor ratings. GE sells a complete line of capacitors that must be properly matched to the lamp and HID ballast. GE capacitors have bleed-in resistors and use biodegradable, nontoxic (no PCBs) dielectric fluid.

GE Oil-filled Capacitors are packaged in metal cases (up to 520V ratings). All GE capacitors are designed for 60,000 hours of continuous life.

Dry Capacitors do not contain oil and are manufactured with plastic casing. Dry casings are rated up 100°C maximum. Dry capacitors are designed and rated for AC voltages below 400V at 50 or 60Hz.

Ignitors

Ignitors are also sold in individual cartons for replacement needs. Ignitors supply a high voltage pulse to ionize the gas creating the glow discharge. Once the lamp is started the ignitor stops providing the pulse. Ignitors are designed to last thousand of hours; however, if the lamp fails or the socket is empty, the ignitor will continue to pulse. The lamps should be replaced or the fixture turned off to prevent premature failure of the ignitor.

Standard ignitors are supplied with metal halide ballast 150 watts or less, pulse start metal halide and high-pressure sodium ballast. There are several different ignitors that meet the needs of many GE lamp and ballast combinations. The appropriate ignitor is listed in the catalog under the ballast specifications.

Potted Core and Coil Ballast

GE potted core and coil ballasts are designed for applications requiring quieter or cooler operation than provided by standard coil and coil ballast. The potting material is sand-filled polyester which provides excellent sound-deadening and heat-transfer qualities.

F-Can Ballast

GE F-Can ballast is recommended for indoor applications and where ballast noise must be minimized. F-Can ballast are encased in fluorescent ballast-type cans and potted with asphalt insulating materials to minimize noise.

Ballast Date and Temperature Codes

Date Codes

GE HID core and coil ballast manufacturing date codes are located on the top end of the core. They are printed in white and indicate year, month manufactured, and order the ballast was manufactured in the month. A code of 070100001 would indicate manufacture date of 07 (year 2007), 01 (month of January), and 00001 would be the manufacturing sequence.

UL Bench Top Temperature Code

To help with UL inspection, the UL Bench top code is listed on the GE label on the core and coil ballast as 1029X. X is the temperature code and represented by the following temperature classifications: A, B, C, D, E and F.

UL Bench Top Letter Code	Temperature Range for Class H (180C) Ballast
A	Less than 75C
B	75C < 80C
C	80C < 85C
D	85C < 90C
E	90C < 95C
F	95C < 100C

GE Ballast HID Electromagnetic nomenclature

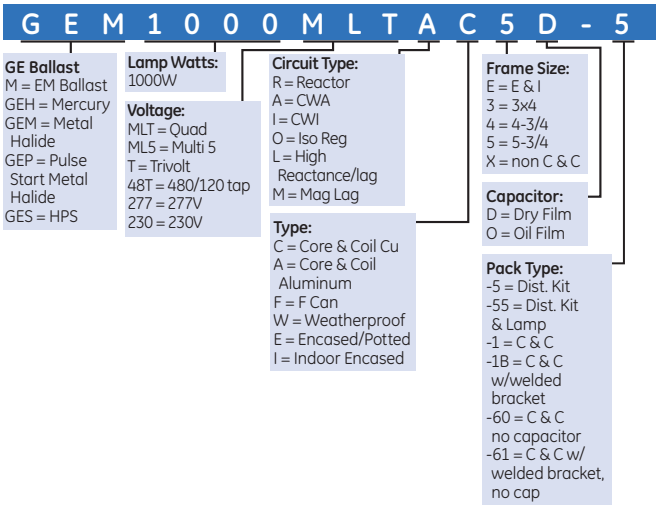

See page E-1 for warranty information.

Electronic HID

HID Electronic and Electromagnetic Ballasts For 20 – 150W Pulse Start HID Lamps

74115 – GEMH20-MC-120

Electronic HID

1 – 20W M156 or C156 120V Micro Electronic HID

- Light weight, low-profile housing
- Superior low frequency square wave frequency design maximizes performance and life of ceramic metal halide lamps.
- Ultra slim can size for fixture design flexibility

General characteristics

Ballast Type	Electronic - Low Frequency
Starting Method	Pulse Start
Line Voltage Regulation (+/-)	10 %
Ambient Temperature (MIN)	0 °C (32 °F)
Ambient Temperature (MAX)	55 °C (131 °F)
Case Temperature (MAX)	80 °C (176 °F)
Ballast Factor	Normal-High (1.0)
Power Factor Correction	Active
Circuit Type	Electronic
Sound Rating	A (20-24 decibels)
Enclosure Type	Plastic
Distance to Lamp (MAX)	8 ft
Additional Info	End of Life Protection (EOL)

Electrical characteristics

Lamp Operating Frequency	133 Hz
Supply Current Frequency	60 Hz
Supply Current Frequency (MIN)	

Order information

Type	No. Items Per Sales Unit	No. Items Per Standard Package
Case	1	10

Dimensions

Wiring diagram WD-eHID MLF/MSF – see example on page 18-65			
Case dimensions – Ref Drawing MLF – see page 18-66			
Length (L)	3.0 in (76 mm)		
Width (W)	1.3 in (33 mm)		
Height (H)	1.18 in (30 mm)		
Weight	0.292 lbs		
Exit Type	Side		
Remote Mounting Distance to Lamp	8 ft		
Remote Mounting Wire Gauge	18 AWG		
Lead lengths	**Qty**	**Exit**	**Length (± 1 in.)**
Red	1	Left	6.0 in (152 mm)
White	1	Left	6.0 in (152 mm)
Brown	1	Left	6.0 in (152 mm)
Black	1	Left	6.0 in (152 mm)

Specifications by lamp and line voltage

Lamp	Specifications by line voltage	
M156		**120**
20 W Ceramic MetalHalide	System Wattage (W)	23
	Nominal Current	0.20 A
	Ballast Factor	1
	Ballast Efficiency	0.870
	Open Circuit Voltage	4000 V
	Drop Out Voltage	96 V
	Power factor (>=)%	0.98
	Crest factor (<)	1.4
	THD % (<)	10
	Min. starting temperature	0 °F (-18 °C)
	Fuse rating	1.5

Safety and performance

UL94V0 Flame Retardant UL 1029 Listed Short Circuit Protection FCC Part 18 (Class A) for EMI and RFI Non-Consumer Limits ANSI – C82.14-2006 cUL Listed UL Listed Inherent Thermal Protection Product is compliant with material restriction requirements of RoHS

87490 – GEMH20-MLF-120

Electronic HID

1 – 20W M156 or C156 120V Electronic HID

- Light weight, low-profile housing
- Superior low-frequency square-wave-frequency design maximizes performance and life of ceramic metal halide lamps
- Ultra-slim can size for fixture design flexibility

General characteristics

Ballast Type	Electronic – Low Frequency
ANSI Lamp Codes	M156
Voltage	120
Line Voltage Regulation (+/-)	10%
Circuit Type	Electronic
Insulation Class	
Type of Capacitor	
Capacitance	
Voltage (MIN)	
Capacitor Temperature Rating	
Ambient Temperature (MAX)	131°F (55°C)
Case Temperature (MAX)	85°C (185°F)
Sound Rating	A (20-24 decibels)
Additional Info	End-of-Life Protection (EOL), Inherent thermal protection

Electrical characteristics

Lamp Operating Frequency	133 Hz
Supply Current Frequency	60 Hz/ 50 Hz/ Supply Current Frequency (MIN) / 50 Hz

Order information

Type	No. Items Per Sales Unit	No. Items Per Standard Package
Case	1	12

Dimensions

Wiring diagram WD-eHID MLF/MSF – see example on page 18-65	
Case dimensions – Ref Drawing MLF – see page 18-66	
Length (L)	3.7 in (95 mm)
Width (W)	1.5 in (40 mm)
Height (H)	1.0 in (25 mm)
Frame Size (H x L)	
Mounting dimensions	
Bracket Length (BL)	
Mount Length (M)	3.3 in (85 mm)
Mount Width (X or F)	1.1 in (30 mm)
Mount Slots (MS)	0.1 in (4 mm)
Weight	0.38 lbs
Exit Type	Side
Remote Mounting Distance to Lamp	8 ft
Remote Mounting Wire Gauge	18 AWG
Lead lengths	
Black	
Brown	
White	
Red	

Specifications by lamp and line voltage

Lamp	Specifications by line voltage	
M156		**120**
20W Ceramic Metal Halide	System Wattage (W)	22.50
	Nominal Current	0.36 A
	Ballast Factor	1
	Ballast Efficiency Factor	0.89
	Open Circuit Voltage	4,000V
	Drop Out Voltage	96V
	Power Factor (>=)%	56
	Crest Factor (<)	1.40
	THD % (<)	79
	Min. Starting Temp (°F/°C)	0 / -18
	Fuse Rating	3
	UL Bench Top Rise	

Safety and performance

ANSI – C62.41 UL 1029 Listed FCC-CLASS A Non-Consumer cUL Listed UL Listed Product is compliant with material restriction requirements of RoHS

See page E-1 for warranty information.

63042 – GEMH20-MSJ-MV

Electronic HID

1-20W M156/C156 120-277V Low frequency Electronic HID

- Superior low frequency square wave frequency design maximizes performance and life of ceramic metal halide lamps.
- Multi-Voltage Technology handles voltage from 120 to 277V
- Improves lumen maintenance vs magnetic
- Suitable for recessed use
- Lamp life 4x the life of halogen: 12K vs 3K
- 2% line regulation minimizes lamp to lamp color variation
- 15% Energy savings vs magnetic HID ballasts in retrofits
- Excellent color control with GE CMH & tight line regulation
- End-of-Lamp-Life Protection

General characteristics

Ballast Type	Electronic – Low Frequency
ANSI Lamp Codes	C156
Voltage	120 and 277
Line Voltage Regulation (+/-)	10%
Circuit Type	Electronic
Ambient Temperature (MIN)	-20°C (-4°F)
Ambient Temperature (MAX)	55°C (131°F)
Case Temperature (MAX)	90°C (194°F)
Sound Rating	A (20-24 decibels)
Enclosure Type	Metal Can
Additional Info	Junction Box Mounting Bottom Lead with Studs

Electrical characteristics

Lamp Operating Frequency	130 Hz
Supply Current Frequency	50 Hz/60 Hz

Order information

Type	No. Items Per Sales Unit	No. Items Per Standard Package
Case	10	10

Specifications by lamp and line voltage

Lamp	Specifications by line voltage		
C156		**120**	**277**
20W Ceramic Metal Halide	System Wattage (W)	23	23
	Nominal Current	0.21 A	0.09 A
	Ballast Factor	1	1
	Ballast Efficiency Factor	0.87	0.87
	Open Circuit Voltage	350 V	350 V
	Drop Out Voltage	96 V	96 V
	Power Factor (>=)%	95	95
	Crest Factor (<)	1.5	1.5
	THD % (<)	10	15
	Min. Starting Temp (°F/°C)	-20 / -29	-20 / -29
	Fuse Rating	1.25	1.25
	UL Bench Top Rise		

Dimensions

Wiring diagram WD-eHID-SLJ – see example on page 18-65			
Case dimensions – Ref Drawing Fig. 3 – see page 18-66			
Length (L)	3.3 in (83 mm)		
Width (W)	3.0 in (76 mm)		
Height (H)	1.6 in (40 mm)		
Frame Size (H x L)			
Mounting dimensions			
Bracket Length (BL)			
Mount Length (M)	2.0 in (51 mm)		
Mount Width (X or F)			
Mount Slots (MS)	8-32		
Weight	1.1 lb		
Exit Type	Bottom Leads with Studs		
Remote Mounting Distance to Lamp	6.56 ft		
Remote Mounting Wire Gauge	18 AWG		
Lead lengths	**Qty**	**Exit**	**Length (±1 in.)**
Black	1	Bottom	6.0 in (152 mm)
Brown	1	Bottom	6.0 in (152 mm)
Green	1	Bottom	6.0 in (152 mm)
Red	1	Bottom	6.0 in (152 mm)
White	1	Bottom	6.0 in (152 mm)

Safety and performance

UL Type 1 Outdoor ANSI - C82.14-2006 Suitable for recessed use UL 1029 Listed FCC Part 18 (Class A) for EMI and RFI Non-Consumer Limits Short Circuit Protection cUL Listed Inherent Thermal Protection Product is compliant with material restriction requirements of RoHS

63043 – GEMH20-MSF-MV

Electronic HID

1-20W M156/C156 120-277V Low frequency Electronic HID

- Superior low frequency square wave frequency design maximizes performance and life of ceramic metal halide lamps.
- 15% Energy savings vs magnetic HID ballasts in retrofits
- Lamp life 4x the life of halogen: 12K vs 3K
- Improves lumen maintenance vs magnetic
- 2% line regulation minimizes lamp to lamp color variation
- Excellent color control with GE CMH & tight line regulation
- End-of-Lamp-Life Protection

General characteristics

Ballast Type	Electronic – Low Frequency
ANSI Lamp Codes	C156
Voltage	120 and 277
Line Voltage Regulation (+/-)	10%
Circuit Type	Electronic
Ambient Temperature (MIN)	-20°C (-4°F)
Ambient Temperature (MAX)	55°C (131°F)
Case Temperature (MAX)	90°C (194°F)
Sound Rating	A (20-24 decibels)
Enclosure Type	Metal Can
Additional Info	Junction Box Mounting Side Leads with feet

Electrical characteristics

Lamp Operating Frequency	130 Hz
Supply Current Frequency	50 Hz/60 Hz

Order information

Type	No. Items Per Sales Unit	No. Items Per Standard Package
Case	10	10

Specifications by lamp and line voltage

Lamp	Specifications by line voltage		
C156		**120**	**277**
20W Ceramic Metal Halide	System Wattage (W)	23	23
	Nominal Current	0.21 A	0.09 A
	Ballast Factor	1	1
	Ballast Efficiency Factor	0.87	0.87
	Open Circuit Voltage	350 V	350 V
	Drop Out Voltage	96 V	96 V
	Power Factor (>=)%	95	95
	Crest Factor (<)	1.5	1.5
	THD % (<)	10	15
	Min. Starting Temp (°F/°C)	-20 / -29	-20 / -29
	Fuse Rating	1.25	1.25
	UL Bench Top Rise		

Dimensions

Wiring diagram WD-eHID SLJ – see example on page 18-65			
Case dimensions – Ref Drawing Fig. 2 – see page 18-66			
Length (L)	3.4 in (85 mm)		
Width (W)	3.1 in (79 mm)		
Height (H)	1.2 in (30 mm)		
Frame Size (H x L)			
Mounting dimensions			
Bracket Length (BL)			
Mount Length (M)	3.78 in (96 mm)		
Mount Width (X or F)	2.64 in (67 mm)		
Mount Slots (MS)	0.17 in (4 mm)		
Weight	1.0 lbs		
Exit Type	Side		
Remote Mounting Distance to Lamp	6.56 ft		
Remote Mounting Wire Gauge	18 AWG		
Lead lengths	**Qty**	**Exit**	**Length (± 1 in)**
Black	1	Bottom	6.0in (152 mm)
Brown	1	Bottom	6.0in (152 mm)
Green	1	Bottom	6.0in (152 mm)
White	1	Bottom	6.0in (152 mm)
Red	1	Bottom	6.0in (152 mm)

Safety and performance

UL Type 1 Outdoor Suitable for recessed use UL 1029 Listed Short Circuit Protection cUL Listed ANSI - C82.14-2006 FCC Part 18 Class B at 120 volts Product is compliant with material restriction requirements of RoHS

See page E-1 for warranty information.

Electronic HID

HID Electronic and Electromagnetic Ballasts For 20 – 150W Pulse Start HID Lamps

63044 – GEMH39-MSJ-MV

Electronic HID

1-39W M130/C130 120-277V Low Frequency Electronic HID

- Superior low frequency square wave frequency design maximizes performance and life of ceramic metal halide lamps.
- 15% Energy savings vs magnetic HID ballasts in retrofits
- Lamp life 4x the life of halogen: 12K vs 3K
- Improves lumen maintenance vs magnetic
- Excellent color control with GE CMH & tight line regulation
- 2% line regulation minimizes lamp to lamp color variation
- Multi-Voltage Technology handles voltage from 120 to 277V
- End-of-Lamp-Life Protection

General characteristics

Ballast Type	Electronic – Low Frequency
ANSI Lamp Codes	C156
Voltage	120 and 277
Line Voltage Regulation (+/-)	10%
Circuit Type	Electronic
Ambient Temperature (MIN)	-20°C (-4°F)
Ambient Temperature (MAX)	55°C (131°F)
Case Temperature (MAX)	90°C (194°F)
Sound Rating	A (20-24 decibels)
Enclosure Type	Metal Can
Additional Info	Junction Box Mounting Bottom Lead with studs

Electrical characteristics

Lamp Operating Frequency	130 Hz
Supply Current Frequency	50 Hz/60 Hz

Order information

Type	No. Items Per Sales Unit	No. Items Per Standard Package
Case	10	10

Dimensions

Wiring diagram WD-eHID-SLJ – see example on page 18-65			
Case dimensions – Ref Drawing Fig. 3 – see page 18-66			
Length (L)	3.3 in (83 mm)		
Width (W)	3.0 in (76 mm)		
Height (H)	1.6 in (40 mm)		
Frame Size (H x L)			
Mounting dimensions			
Bracket Length (BL)			
Mount Length (M)	2.0 in (51 mm)		
Mount Width (X or F)			
Mount Slots (MS)	8-32		
Weight	1.1 lb		
Exit Type	Bottom Leads with Studs		
Remote Mounting Distance to Lamp	6.56 ft		
Remote Mounting Wire Gauge	18 AWG		
Lead lengths	**Qty**	**Exit**	**Length (±1 in.)**
Black	1	Bottom	6.0 in (152 mm)
Brown	1	Bottom	6.0 in (152 mm)
Green	1	Bottom	6.0 in (152 mm)
Red	1	Bottom	6.0 in (152 mm)
White	1	Bottom	6.0 in (152 mm)

Specifications by lamp and line voltage

Lamp	Specifications by line voltage		
C130, M130		**120**	**277**
39W Ceramic Metal Halide	System Wattage (W)	44	45
	Nominal Current	0.17 A	0.39 A
	Ballast Factor	1	1
	Ballast Efficiency Factor	0.89	0.87
	Open Circuit Voltage	350 V	350 V
	Drop Out Voltage	96 V	96 V
	Power Factor (>=)%	95	95
	Crest Factor (<)	1.5	1.5
	THD % (<)	10	15
	Min. Starting Temp (°F/°C)	-20 / -29	-20 / -29
	Fuse Rating	1.25	1.25
	UL Bench Top Rise		

Safety and performance

UL Type 1 Outdoor ANSI - C82.14-2006 Suitable for recessed use UL 1029 Listed FCC Part 18 (Class A) for EMI and RFI Non-Consumer Limits
Short Circuit Protection Inherent Thermal Protection cUL Listed Product is compliant with material restriction requirements of RoHS

63045 – GEMH39-MSF-MV

Electronic HID

1-39W M130/C130 120-277V Low Frequency Electronic HID

- Superior low frequency square wave frequency design maximizes performance and life of ceramic metal halide lamps.
- 15% Energy savings vs magnetic HID ballasts in retrofits
- Energy saving high efficiency instant start electronic ballast (> 90%)
- Lamp life 4x the life of halogen: 12K vs 3K
- Improves lumen maintenance vs magnetic
- Excellent color control with GE CMH & tight line regulation
- 2% line regulation minimizes lamp to lamp color variation
- Remote mounting distance to lamp = 2 m (min 18 AWG)
- Multi-Voltage Technology handles voltage from 120 to 277V
- End-of-Lamp-Life Protection
- UL940V0 flame retardant plastic housing

General characteristics

Ballast Type	Electronic – Low Frequency
ANSI Lamp Codes	C156
Voltage	120 and 277
Line Voltage Regulation (+/-)	10%
Circuit Type	Electronic
Ambient Temperature (MIN)	-20°C (-4°F)
Ambient Temperature (MAX)	55°C (131°F)
Case Temperature (MAX)	90°C (194°F)
Sound Rating	A (20-24 decibels)
Enclosure Type	Metal Can
Additional Info	Junction Box Mounting Bottom Lead with feet

Electrical characteristics

Lamp Operating Frequency	130 Hz
Supply Current Frequency	50 Hz/60 Hz

Order information

Type	No. Items Per Sales Unit	No. Items Per Standard Package
Case	10	10

Dimensions

Wiring diagram WD-eHID SLJ – see example on page 18-65			
Case dimensions – Ref Drawing Fig. 2– see page 18-66			
Length (L)	3.4 in (85 mm)		
Width (W)	3.1 in (79 mm)		
Height (H)	1.2 in (30 mm)		
Frame Size (H x L)			
Mounting dimensions			
Bracket Length (BL)			
Mount Length (M)	3.78 in (96 mm)		
Mount Width (X or F)	2.64 in (67 mm)		
Mount Slots (MS)	0.17 in (4 mm)		
Weight	1.0 lbs		
Exit Type	Side		
Remote Mounting Distance to Lamp	6.56 ft		
Remote Mounting Wire Gauge	18 AWG		
Lead lengths	**Qty**	**Exit**	**Length (± 1 in)**
Black	1	Bottom	6.0in (152 mm)
Brown	1	Bottom	6.0in (152 mm)
Green	1	Bottom	6.0in (152 mm)
White	1	Bottom	6.0in (152 mm)
Red	1	Bottom	6.0in (152 mm)

Specifications by lamp and line voltage

Lamp	Specifications by line voltage		
C130, M130		**120**	**277**
39W Ceramic Metal Halide	System Wattage (W)	44	45
	Nominal Current	0.17 A	0.39 A
	Ballast Factor	1	1
	Ballast Efficiency Factor	0.89	0.87
	Open Circuit Voltage	350 V	350 V
	Drop Out Voltage	96 V	96 V
	Power Factor (>=)%	95	95
	Crest Factor (<)	1.5	1.5
	THD % (<)	10	15
	Min. Starting Temp (°F/°C)	-20 / -29	-20 / -29
	Fuse Rating	1.25	1.25
	UL Bench Top Rise		

Safety and performance

Product is compliant with material restriction requirements of RoHS UL Type 1 Outdoor ANSI - C82.14-2006 Suitable for recessed use UL 1029 Listed cUL Listed
Short Circuit Protection Inherent Thermal Protection FCC Part 18 (Class A) for EMI and RFI Non-Consumer Limits

See page E-1 for warranty information.

74116– GEMH39-MC-120

Electronic HID

1 – 39W M130 or C130 120V Micro Electronic HID

- Light weight, low-profile housing
- Superior low frequency square wave frequency design maximizes performance and life of ceramic metal halide lamps.
- Ultra slim can size for fixture design flexibility

General characteristics

Ballast Type	Electronic - Low Frequency
Starting Method	n/a
Line Voltage Regulation (+/-)	10 %
Ambient Temperature (MIN)	0 °C (32 °F)
Ambient Temperature (MAX)	
Case Temperature (MAX)	80 °C (176 °F)
Ballast Factor	Normal-High (1.0)
Sound Rating	A (20-24 decibels)
Enclosure Type	Plastic
Distance to Lamp (MAX)	8 ft
Additional Info	End of Life Protection (EOL), Thermally protected

Electrical characteristics

Lamp Operating Frequency	133 Hz

Order information

Type	No. Items Per Sales Unit	No. Items Per Standard Package
Case	1	10

Dimensions

Wiring diagram WD-eHID MLF/MSF – see example on page 18-65
Case dimensions – Ref Drawing MLF – see page 18-66

Length (L)	3.0 in (76 mm)		
Width (W)	1.3 in (33 mm)		
Height (H)	1.18 in (30 mm)		
Weight	0.38 lbs		
Exit Type	Side		
Remote Mounting Distance to Lamp	8 ft		
Remote Mounting Wire Gauge	18 AWG		
Lead lengths	**Qty**	**Exit**	**Length (± 1 in.)**
White	1	Left	6.0 in (152 mm)
Red	1	Left	6.0 in (152 mm)
Brown	1	Left	6.0 in (152 mm)
Black	1	Left	6.0 in (152 mm)

Specifications by lamp and line voltage

Lamp	Specifications by line voltage	
M130		**120**
39 W Ceramic MetalHalide	System Wattage (W)	43
	Ballast Factor	1
	Ballast Efficiency	0.907
	Max Input Current	0.39 A
	Open Circuit Voltage	4000 V
	Drop Out Voltage	96 V
	Power factor (>=) %	0.98
	Crest factor (<)	1.4
	THD % (<)	10
	Min. starting temperature	0 °F (-18 °C)
	Fuse rating	1.5

Safety and performance

UL94V0 Flame Retardant Short Circuit Protection ANSI – C82.14-2006 cUL Listed Inherent Thermal Protection UL Listed
Product is compliant with material restriction requirements of RoHS

Note: This product no longer manufactured. Remaining stock will be sold.

75378 – GEMH39-MCM-120

Electronic HID

1 – 39W M130 or C130 120V Micro Electronic HID Metal Can

- Light weight, low-profile housing
- Superior low frequency square wave frequency design maximizes performance and life of ceramic metal halide lamps.
- Ultra slim can size for fixture design flexibility

General characteristics

Ballast Type	Electronic - Low Frequency
Line Voltage Regulation (+/-)	10 %
Ambient Temperature (MAX)	55 °C (131 °F)
Case Temperature (MAX)	80 °C (176 °F)
Ballast Factor	Normal-High (1.0)
Sound Rating	A (20-24 decibels)
Enclosure Type	Metal
Distance to Lamp (MAX)	8 ft
Additional Info	End of Life Protection (EOL)

Electrical characteristics

Lamp Operating Frequency	130 Hz

Order information

Type	No. Items Per Sales Unit	No. Items Per Standard Package
Case	1	10

Dimensions

Wiring diagram WD-eHID MLF/MSF – see example on page 18-65
Case dimensions – Ref Drawing MLF – see page 18-66

Length (L)	3.5 in (90 mm)		
Width (W)	1.3 in (33 mm)		
Height (H)	1.18 in (30 mm)		
Weight	0.38 lbs		
Exit Type	Side		
Remote Mounting Distance to Lamp	8 ft		
Remote Mounting Wire Gauge	18 AWG		
Lead lengths	**Qty**	**Exit**	**Length (± 1 in.)**
Green	1	Left	6.0 in (152 mm)
White	1	Left	6.0 in (152 mm)
Red	1	Left	6.0 in (152 mm)
Brown	1	Left	6.0 in (152 mm)
Black	1	Left	6.0 in (152 mm)

Specifications by lamp and line voltage

Lamp	Specifications by line voltage	
M130		**120**
20 W Ceramic MetalHalide	System Wattage (W)	43
	Nominal Curren	0.39 A
	Ballast Factor	1
	Ballast Efficiency	0.907
	Open Circuit Voltage	4000 V
	Drop Out Voltage	96 V
	Power factor (>=) %	0.95
	Crest factor (<)	1.4
	THD % (<)	10
	Min. starting temperature	0 °F (-18 °C)
	Fuse rating	1.5

Safety and performance

UL Type 1 Outdoor UL1029 Listed Short Circuit Protection ANSI – C82.14-2006 cUL Listed Inherent Thermal Protection UL Listed
Product is compliant with material restriction requirements of RoHS

See page E-1 for warranty information.

Electronic HID

HID Electronic and Electromagnetic Ballasts For 20 – 150W Pulse Start HID Lamps

87501 – GEMH39-MSF-120

Electronic HID

1 – 39W M130 or C130 120V Electronic HID

General characteristics

Ballast Type	Electronic – Low Frequency
ANSI Lamp Codes	M130
Voltage	120
Line Voltage Regulation (+/-)	10%
Circuit Type	
Insulation Class	
Type of Capacitor	
Capacitance	
Voltage (MIN)	
Capacitor Temperature Rating	
Ambient Temperature (MAX)	131°F (55°C)
Case Temperature (MAX)	90 °C (194 °F)
Sound Rating	A (20-24 decibels)
Additional Info	End-of-Life Protection (EOL), Thermally protected

Electrical characteristics

Lamp Operating Frequency	130 Hz

Order information

Type	No. Items Per Sales Unit	No. Items Per Standard Package
Case	1	10

Specifications by lamp and line voltage

Lamp	Specifications by line voltage	
M130		**120**
39W Ceramic Metal Halide	System Wattage (W)	43.00
	Nominal Current	0.37 A
	Ballast Factor	1.00
	Ballast Efficiency Factor	0.91
	Open Circuit Voltage	
	Drop Out Voltage	96V
	Power Factor (>=)%	99
	Crest Factor (<)	1.40
	THD % (<)	6.80
	Min. Starting Temp (°F/°C)	-4 / -20
	Fuse Rating	3
	UL Bench Top Rise	

Dimensions

Wiring diagram WD-eHID MLF/MSF – see example on page 18-65	
Case dimensions – Ref Drawing MSF – see page 18-66	
Length (L)	3.7 in (95 mm)
Width (W)	2.9 in (76 mm)
Height (H)	1.18 in (30 mm)
Frame Size (H x L)	
Mounting dimensions	
Bracket Length (BL)	
Mount Length (M)	3.3 in (86 mm)
Mount Width (X or F)	2.5 in (64 mm)
Mount Slots (MS)	0.1 in (4 mm)
Weight	0.38 lbs
Exit Type	Side
Remote Mounting Distance to Lamp	8 ft
Remote Mounting Wire Gauge	18 AWG
Lead lengths	
Black	
Brown	
White	
Red	

Safety and performance

UL Type 1 Outdoor ANSI – C62.41 Suitable for recessed use UL 1029 Listed cUL Listed UL Listed Product is compliant with material restriction requirements of RoHS

Note: This product is no longer manufactured. Remaining stock will be sold.

87531 – GEMH70-MSF-120

Electronic HID

1 – 70W, M98, M/C143, 120V Electronic HID

General characteristics

Ballast Type	Electronic – Low Frequency
ANSI Lamp Codes	M98, M143, M139, C143, C139
Voltage	120
Line Voltage Regulation (+/-)	10%
Circuit Type	
Insulation Class	
Type of Capacitor	
Capacitance	
Voltage (MIN)	
Capacitor Temperature Rating	
Ambient Temperature (MAX)	131°F (55°C)
Case Temperature (MAX)	90°C (194°F)
Sound Rating	A (20-24 decibels)
Additional Info	End of Life Protection (EOL), Thermally protected

Electrical characteristics

Lamp Operating Frequency	130 Hz

Order information

Type	No. Items Per Sales Unit	No. Items Per Standard Package
Case	1	10

Specifications by lamp and line voltage

Lamp	Specifications by line voltage	
M98, M143, M139, C143, C139		**120**
70W Ceramic Metal Halide	System Wattage (W)	77
	Nominal Current	0.68 A
	Ballast Factor	1.00
	Ballast Efficiency Factor	0.91
70W Quartz Metal Halide	Open Circuit Voltage	
	Drop Out Voltage	
	Power Factor (>=)%	99
	Crest Factor (<)	1.4
	THD % (<)	8.3
	Min. Starting Temp (°F/°C)	-4 / -20
	Fuse Rating	3
	UL Bench Top Rise	

Dimensions

Wiring diagram WD-eHID MLF/MSF – see example on page 18-65			
Case dimensions – Ref Drawing MSF – see page 18-66			
Length (L)	3.7 in (95 mm)		
Width (W)	2.9 in (76 mm)		
Height (H)	1.18 in (30 mm)		
Frame Size (H x L)			
Mounting dimensions			
Bracket Length (BL)			
Mount Length (M)	3.3 in (86 mm)		
Mount Width (X or F)	2.5 in (64 mm)		
Mount Slots (MS)	0.1 in (4 mm)		
Weight	0.38 lbs		
Exit Type	Side		
Remote Mounting Distance to Lamp	8 ft		
Remote Mounting Wire Gauge	18 AWG		
Lead lengths	**Qty**	**Exit**	**Length (± 1 in)**
Black	1	Left	10 in (254 mm)
Brown	1	Right	10 in (254 mm)
White	1	Left	10 in (254 mm)
Red	1	Right	10 in (254 mm)

Safety and performance

Housing meets UL94V0 flame retardant UL Type 1 Outdoor ANSI – C62.41 UL 1029 Listed FCC-CLASS A Non-Consumer cUL Listed UL Listed

Product is compliant with material restriction requirements of RoHS

See page E-1 for warranty information.

94135 -GEMH70-MSLF-120

Electronic HID

1 - 70W, M98/C98, M139/C139, 120V Electronic HID

General characteristics

Ballast Type	Electronic – Low Frequency
ANSI Lamp Codes	M98/C98 or M139/C139
Line Voltage Regulation (+/-)	10%
Ambient Temperature (MAX)	122°F (50°C)
Case Temperature (MAX)	90°C (194°F)
Sound Rating	A (<24 decibels)
Enclosure Type	Metal
Distance to Lamp (MAX)	8 ft
Additional Info	End of Life Protection (EOL) / Thermally protected

Electrical characteristics

Lamp Operating Frequency	275 Hz

Order information

Type	No. Items Per Sales Unit	No. Items Per Standard Package
Case	1	10

Specifications by lamp and line voltage

Lamp	Specifications by Line Voltage	
M98/C98		**120**
	System Wattage (W)	77
	Nominal Current	0.64 A
	Ballast Factor	1
	Ballast Efficiency	0.90
	Power factor (>=) %	95
	Crest factor (<)	1.5
	THD % (<)	10
	Min. Starting Temp (°F/°C)	5/-15
	Fuse rating	2.5A
M139/C139		**120**
	System Wattage (W)	77
	Nominal Current	0.64 A
	Ballast Factor	1
	Ballast Efficiency	0.90
	Power factor (>=) %	95
	Crest factor (<)	1.5
	THD % (<)	10
	Min. Starting Temp (°F/°C)	5/-15
	Fuse rating	2.5A

Dimensions

Wiring diagram WD-eHID SLJ – see example on page 18-65		
Case dimensions – Ref Drawing SLJ – see page 18-66		
Length (L)	5.51 in (140 mm)	
Width (W)	1.74 in (44.2 mm)	
Height (H)	1.18 in (30 mm)	
Frame Size (H x L)		
Mounting dimensions		
Bracket Length (BL)		
Mount Length (M)	5.24 in (133 mm)	
Mount Width (X or F)	1.13 in (28.6 mm)	
Mount Slots (MS)	0.19 in (4.8 mm)	
Weight	0.56 lbs	
Exit Type	Side	
Remote Mounting Distance to Lamp	8 ft	
Remote Mounting Wire Gauge	18 AWG	
Lead lengths	**Qty**	**Length (± 1 in)**
White	1	10 in (254 mm)
Black	1	10 in (254 mm)
Green	1	10 in (254 mm)
Red	1	10 in (254 mm)
Brown	1	10 in (254 mm)

Safety and performance

UL 1029 Listed cUL Listed Housing meets UL 1439 Suitable for recessed use Product is compliant with material restriction requirements of RoHS

87546 – GEMH70-SLJ-MV

Electronic HID

1 – 70W, M98, M/C143, 120V Electronic HID

General characteristics

Ballast Type	Electronic – Low Frequency
ANSI Lamp Codes	M98, M143, C143, M139, C139
Voltage	120/277
Line Voltage Regulation (+/-)	10%
Ambient Temperature (MAX)	131°F (55°C)
Case Temperature (MAX)	90°C (194°F)
Sound Rating	A (20-24 decibels)
Additional Info	End of Life Protection (EOL), Thermally protected

Electrical characteristics

Lamp Operating Frequency	130 Hz

Order information

Type	No. Items Per Sales Unit	No. Items Per Standard Package
Case	1	10

Specifications by lamp and line voltage

Lamp	Specifications by Line Voltage		
M98, M143, M139, C143, C139		**120**	**277**
70W Ceramic Metal Halide	System Wattage (W)	77	77
	Nominal Current	0.66 A	0.30 A
	Ballast Factor	1	1
	Ballast Efficiency Factor	0.91	0.91
70W Quartz Metal Halide	Open Circuit Voltage		
	Drop Out Voltage	96V	96V
	Power Factor (>=)%	99	97
Pulse Arc	Crest Factor (<)	1.4	1.4
	THD % (<)	4.9	7.7
	Min. Starting Temp (°F/°C)	-4 / -20	-4 / -20
	Fuse Rating	3	3
	UL Bench Top Rise		

Dimensions

Wiring diagram WD-eHID SLJ – see example on page 18-65			
Case dimensions – Ref Drawing SLJ – see page 18-66			
Length (L)	7.2 in (185 mm)		
Width (W)	2.5 in (66 mm)		
Height (H)	2.2 in (56 mm)		
Frame Size (H x L)			
Mounting dimensions			
Bracket Length (BL)			
Mount Length (M)	0.4 in (11 mm)		
Mount Width (X or F)			
Mount Slots (MS)			
Weight	0.38 lbs		
Exit Type	Bottom Leads with Studs		
Remote Mounting Distance to Lamp	8 ft		
Remote Mounting Wire Gauge	18 AWG		
Lead lengths	**Qty**	**Exit**	**Length (± 1 in)**
Black	1	Left	10 in (254 mm)
Brown	1	Right	10 in (254 mm)
White	1	Left	10 in (254 mm)
Red	1	Right	10 in (254 mm)

Safety and performance

UL Type 1 Outdoor ANSI – C62.41 UL 1029 Listed FCC-CLASS A Non-Consumer cUL Listed Product is compliant with material restriction requirements of RoHS

See page E-1 for warranty information.

Electronic HID

HID Electronic and Electromagnetic Ballasts For 20 – 150W Pulse Start HID Lamps

87561 – GEMH100-SLJ-MV

Electronic HID

1 – 100W, M90, M/C140, 120V-277V Electronic HID

General characteristics

Ballast Type	Electronic – Low Frequency
ANSI Lamp Codes	M90, M140, C140
Voltage	120/277
Line Voltage Regulation (+/-)	10%
Ambient Temperature (MAX)	131°F (55°C)
Case Temperature (MAX)	90°C (194°F)
Sound Rating	A (20-24 decibels)
Additional Info	End of Life Protection (EOL), Thermally protected

Electrical characteristics

Lamp Operating Frequency	130 Hz

Order information

Type	No. Items Per Sales Unit	No. Items Per Standard Package
Case	1	10

Dimensions

Wiring diagram WD - eHID SLJ – see example on page 18-65			
Case dimensions – Ref Drawing SLJ – see page 18-66			
Length (L)	7.2 in (185 mm)		
Width (W)	2.5 in (66 mm)		
Height (H)	2.2 in (56 mm)		
Frame Size (H x L)			
Mounting dimensions			
Bracket Length (BL)			
Mount Length (M)	0.4 in (11 mm)		
Mount Width (X or F)			
Mount Slots (MS)			
Weight	0.38 lbs		
Exit Type	Bottom Leads with Studs		
Remote Mounting Distance to Lamp	8 ft		
Remote Mounting Wire Gauge	18 AWG		
Lead lengths	**Qty**	**Exit**	**Length (± 1 in)**
Black	1	Left	10 in (254 mm)
Brown	1	Right	10 in (254 mm)
White	1	Left	10 in (254 mm)
Red	1	Right	10 in (254 mm)

Specifications by lamp and line voltage

Lamp	Specifications by line voltage	120	277	Lamp	Specifications by line voltage	120	277
M90, M140				**C140**			
100W Ceramic Metal Halide	System Wattage (W)	110	107		System Wattage (W)	110	107
	Nominal Current	0.93 A	0.41 A		Nominal Current	0.93 A	0.41 A
	Ballast Factor	1	1		Ballast Factor	1	1
100W Quartz Metal Halide	Ballast Efficiency Factor	0.91	0.93		Ballast Efficiency Factor		
	Open Circuit Voltage				Open Circuit Voltage		
	Drop Out Voltage	96V	96V		Drop Out Voltage	96V	96V
	Power Factor (>=)%	99	98		Power Factor (>=)%	99	98
	Crest Factor (<)	1.4	1.4		Crest Factor (<)	1.4	1.4
	THD % (<)	4.7	7.8		THD % (<)	4.7	7.8
	Min. Starting Temp (°F/°C)	-4 / -20	-4 / -20		Min. Starting Temp (°F/°C)	0 / -18	0 / -18
	Fuse Rating	3	3		Fuse Rating	3	3
	UL Bench Top Rise				UL Bench Top Rise		

Safety and performance UL Type 1 Outdoor ANSI – C62.41 UL 1029 Listed cUL Listed Product is compliant with material restriction requirements of RoHS

87576 – GEMH150-SLJ-MV

Electronic HID

1 – 150W, M102, M/C142, 120V-277V Electronic HID

General characteristics

Ballast Type	Electronic – Low Frequency
ANSI Lamp Codes	M142, M102, C142
Voltage	120/277
Line Voltage Regulation (+/-)	10%
Ambient Temperature (MAX)	131°F (55°C)
Case Temperature (MAX)	85°C (185°F)
Sound Rating	A (20-24 decibels)
Additional Info	End of Life Protection (EOL), Thermally protected

Electrical characteristics

Lamp Operating Frequency	130 Hz

Order information

Type	No. Items Per Sales Unit	No. Items Per Standard Package
Case	1	10

Dimensions

Wiring diagram WD-eHID SLJ – see example on page 18-65			
Case dimensions – Ref Drawing SLJ – see page 18-66			
Length (L)	7.2 in (185 mm)		
Width (W)	2.5 in (66 mm)		
Height (H)	2.2 in (56 mm)		
Frame Size (H x L)			
Mounting dimensions			
Bracket Length (BL)			
Mount Length (M)	0.4 in (11 mm)		
Mount Width (X or F)			
Mount Slots (MS)			
Weight	0.38 lbs		
Exit Type	Bottom Leads with Studs		
Remote Mounting Distance to Lamp	8 ft		
Remote Mounting Wire Gauge	18 AWG		
Lead lengths	**Qty**	**Exit**	**Length (± 1 in)**
Black	1	Left	10 in (254 mm)
Brown	1	Right	10 in (254 mm)
White	1	Left	10 in (254 mm)
Red	1	Right	10 in (254 mm)

Specifications by lamp and line voltage

Lamp	Specifications by line voltage	120	277	Lamp	Specifications by line voltage	120	277
M102, M142				**C142**			
150W Quartz Metal Halide,	System Wattage (W)	167	164		System Wattage (W)	167	164
	Nominal Current	1.44 A	0.62 A		Nominal Current	1.44 A	0.62 A
	Ballast Factor	1	1		Ballast Factor	1	1
150W Ceramic Metal Halide	Ballast Efficiency Factor	0.90	0.91		Ballast Efficiency Factor		
	Open Circuit Voltage				Open Circuit Voltage		
	Drop Out Voltage	96V	96V		Drop Out Voltage	96V	96V
	Power Factor (>=)%	99	99		Power Factor (>=)%	99	99
	Crest Factor (<)	1.4	1.4		Crest Factor (<)	1.4	1.4
	THD % (<)	4.2	10.6		THD % (<)	4.2	10.6
	Min. Starting Temp (°F/°C)	-4 / -20	-4 / -20		Min. Starting Temp (°F/°C)	0 / -18	0 / -18
	Fuse Rating	3	3		Fuse Rating	3	3
	UL Bench Top Rise				UL Bench Top Rise		

Safety and performance UL Type 1 Outdoor ANSI – C62.41 UL 1029 Listed FCC-CLASS A Non-Consumer cUL Listed Product is compliant with material restriction requirements of RoHS

See page E-1 for warranty information.

86824 – GEM50MLTLC3D-5

Metal Halide

1 – 50W MH M110 or M148 Quad (120/208/240/277V)

- Magnetic ballast construction ideal for a wide variety of lighting applications
- Precision-wound coils, ensuring even heat dissipation and the highest electrical integrity
- Distributor replacement kit contains the appropriate core and coil with color coded leads, a properly rated capacitor and ignitor (if required) and all other components required for ballast replacement
- Quad ballast (120, 208, 240, 277)

General characteristics

Ballast Type	Magnetic – Core and Coil
ANSI Lamp Codes	M110 or M148
Voltage	120/208/240/277
Line Voltage Regulation (+/-)	5%
Circuit Type	HX-HPF
Insulation Class	180C
Type of Capacitor	Dry film
Capacitance	6 Mfd GECAP-6/280V-D
Voltage (MIN)	280
Capacitor Temperature Rating	100°C (212°F)
GE Igniter	MH350-1A
Sound Rating	
Additional Info	

Dimensions

Wiring diagram HID W-(H) – see example on page 18-68	
Case dimensions – Ref Drawing PC1 – see page 18-71	
Length (L)	5.25 in (133 mm)
Width (W)	1.25 in (32 mm)
Mounting dimensions	
Mount Length (M)	4.6 in (117 mm)
Mount Width (X or F)	
Mount Slots (MS)	0.25 in (6 mm)
A	1.0
B	2.0
Weight	3.40 lbs
Exit Type	Side
Nominal Length	2.7 in (69 mm)
Frame Size (H x L)	2.813 in x 3.939 in

Electrical characteristics

Supply Current Frequency	60 Hz

Order information

Type	No. Items Per Sales Unit	No. Items Per Standard Package
Distributor Kit	1	6

Specifications by lamp and line voltage

Lamp	Specifications by line voltage				
M110, M148		**120**	**208**	**240**	**277**
50W Quartz Metal Halide	System Wattage (W)	61	61	61	61
	Nominal Current	0.60 A	0.30 A	0.30 A	0.20 A
	Ballast Factor	1	1	1	1
	Ballast Efficiency Factor	0.82	0.82	0.82	0.82
	Max Input Current	1.16 A	0.67 A	0.58 A	0.50 A
	Starting Current	0.61 A	0.34 A	0.30 A	0.26 A
	Open Circuit Voltage	264V	264V	264V	264V
	Drop Out Voltage	96V	166V	192V	222V
	Power Factor (>=)%	90	90	90	90
	Min. Starting Temp (°F/°C)	-22 / -30	-22 / -30	-22 / -30	-22 / -30
	Fuse Rating	3	3	2	2
	UL Bench Top Rise	C	C	C	C

Safety and performance cUL Listed UL Listed

86847 – GEM70MLTLC3D-5

Metal Halide

1 – 70W MH M98 or M143 Quad (120/208/240/277V)

- Magnetic ballast construction ideal for a wide variety of lighting applications
- Precision-wound coils, ensuring even heat dissipation and the highest electrical integrity
- Distributor replacement kit contains the appropriate core and coil with color coded leads, a properly rated capacitor and ignitor (if required) and all other components required for ballast replacement
- Quad ballast (120, 208, 240, 277)

General characteristics

Ballast Type	Magnetic – Core and Coil
ANSI Lamp Codes	M98 or M143
Voltage	120/208/240/277
Line Voltage Regulation (+/-)	5%
Circuit Type	HX-HPF
Insulation Class	180C
Type of Capacitor	Dry film
Capacitance	8 Mfd GECAP-8/280V-D
Voltage (MIN)	280
Capacitor Temperature Rating	100°C (212°F)
GE Igniter	MH350-1A
Sound Rating	
Additional Info	

Dimensions

Wiring diagram HID W-(H) – see example on page 18-68	
Case dimensions – Ref Drawing PC1 – see page 18-71	
Length (L)	5.25 in (133 mm)
Width (W)	1.25 in (32 mm)
Mounting dimensions	
Mount Length (M)	4.6 in (117 mm)
Mount Width (X or F)	
Mount Slots (MS)	0.25 in (6 mm)
A	2.0
B	3.0
Weight	5.00 lbs
Exit Type	Side
Nominal Length	2.7 in (69 mm)
Frame Size (H x L)	2.813 in x 3.939 in

Electrical characteristics

Supply Current Frequency	60 Hz

Order information

Type	No. Items Per Sales Unit	No. Items Per Standard Package
Distributor Kit	1	6

Specifications by lamp and line voltage

Lamp	Specifications by line voltage				
M98, M143		**120**	**208**	**240**	**277**
70W Ceramic Metal Halide	System Wattage (W)	88	88	88	88
	Nominal Current	0.90 A	0.50 A	0.40 A	0.40 A
70W Quartz Metal Halide	Ballast Factor	1	1	1	1
	Ballast Efficiency Factor	0.80	0.80	0.80	0.80
	Max Input Current	1.51 A	0.88 A	0.75 A	0.66 A
	Starting Current	0.96 A	0.59 A	0.49 A	0.44 A
	Open Circuit Voltage	257V	257V	257V	257V
	Drop Out Voltage	96V	166V	192V	222V
	Power Factor (>=)%	90	90	90	90
	Min. Starting Temp (°F/°C)	-22 / -30	-22 / -30	-22 / -30	-22 / -30
	Fuse Rating	4	3	3	2
	UL Bench Top Rise	A	A	A	A

Safety and performance cUL Listed UL Listed

See page E-1 for warranty information.

Metal Halide

HID Electronic and Electromagnetic Ballasts For 20 – 175W Metal Halide HID Lamps

78517 – GEM70TRILC3-5

Metal Halide

1 – 70W M143 Tri Tap (120/277/347V)

- Magnetic ballast construction ideal for a wide variety of lighting applications
- Precision-wound coils, ensuring even heat dissipation and the highest electrical integrity
- Distributor replacement kit contains the appropriate core and coil with color coded leads, a properly rated capacitor and ignitor (if required) and all other components required for ballast replacement
- Tri Tap ballast (120/277/347)

General characteristics

Ballast Type	Magnetic – Core and Coil
ANSI Lamp Codes	M143
Voltage	120/277/347
Line Voltage Regulation (+/-)	5%
Circuit Type	HX-HPF
Insulation Class	Class N, 200C
Type of Capacitor	Dry film
Capacitance	8 Mfd GECAP-8/280V-D
Voltage (MIN)	300
Capacitor Temperature Rating	105°C (221°F)
GE Igniter	MH350-1A
Sound Rating	
Additional Info	

Dimensions

Wiring diagram HID W-(L) – see example on page 18-69	
Case dimensions – Ref Drawing PC1 – see page 18-71	
Length (L)	5.25 in (133 mm)
Width (W)	1.25 in (32 mm)
Mounting dimensions	
Mount Length (M)	
Mount Width (X or F)	
Mount Slots (MS)	
A	1.50 in (38 mm)
B	2.95 in (75 mm)
Weight	5.00 lbs
Exit Type	Side
Nominal Length	3.54 in (90 mm)
Frame Size (H x L)	2.82 in (72 mm) x 3.94 in (101 mm)

Electrical characteristics

Supply Current Frequency	50 Hz/60 Hz

Order information

Type	No. Items Per Sales Unit	No. Items Per Standard Package
Distributor Kit	1	6

Specifications by lamp and line voltage

Lamp	Specifications by line voltage			
M143		**120**	**277**	**347**
	System Wattage (W)	91	91	91
	Nominal Current	0.90A	0.39A	0.31A
	Ballast Factor	1	1	1
	Ballast Efficiency Factor	0.77	0.77	0.77
	Max Input Current	1.00 A	0.43 A	0.34 A
	Starting Current	1.10 A	1.10 A	1.10 A
	Open Circuit Voltage	230V	230V	230V
	Drop Out Voltage	102V	235V	295V
	Power Factor (>=)%	90	90	90
	Min. Starting Temp (°F/°C)	-40 / -40	-40 / -40	-40 / -40
	Fuse Rating	3	1	1
	UL Bench Top Rise	A	A	A

Safety and performance cUL Listed UL Listed

67337 – GEM7048TLA3D-5/2

Metal Halide

1 – 70W MH M98 or M143 480

- Magnetic ballast construction ideal for a wide variety of lighting applications
- Precision-wound coils, ensuring even heat dissipation and the highest electrical integrity
- Distributor replacement kit contains the appropriate core and coil with color coded leads, a properly rated capacitor and ignitor (if required) and all other components required for ballast replacement

General characteristics

Ballast Type	Magnetic – Core and Coil
ANSI Lamp Codes	M98 or M143
Voltage	480
Line Voltage Regulation (+/-)	5%
Circuit Type	HX-HPF
Insulation Class	Class H, 180°C or Class N, 200°C
Type of Capacitor	Dry film
Capacitance	8 Mfd GECAP-8/280V-D
Voltage (MIN)	300
Capacitor Temperature Rating	100°C (212°F)
GE Igniter	MH350-1A
Sound Rating	
Additional Info	

Dimensions

Wiring diagram HID W-(F) – see example on page 18-68	
Case dimensions – Ref Drawing PC1 – see page 18-67	
Length (L)	5.25 in (133 mm)
Width (W)	1.25 in (32 mm)
Mounting dimensions	
Mount Length (M)	4.6 in (117 mm)
Mount Width (X or F)	
Mount Slots (MS)	0.25 in (6 mm)
A	1.50
B	2.60
Weight	4.80 lbs
Exit Type	Side
Nominal Length	2.7 in (69 mm)
Frame Size (H x L)	2.813 in x 3.939 in

Electrical characteristics

Supply Current Frequency	60 Hz

Order information

Type	No. Items Per Sales Unit	No. Items Per Standard Package
Distributor Kit	1	6

Specifications by lamp and line voltage

Lamp	Specifications by line voltage	
M98		**480**
70W Ceramic Metal Halide	System Wattage (W)	98
	Nominal Current	0.23A
70W Quartz Metal Halide	Ballast Factor	1
	Ballast Efficiency Factor	0.71
	Max Input Current	0.23 A
	Starting Current	1.10 A
	Open Circuit Voltage	260V
	Drop Out Voltage	360V
	Power Factor (>=) %	90
	Min. Starting Temp (°F/°C)	-20 / -30
	Fuse Rating	1
	UL Bench Top Rise	A

Safety and performance cUL Listed UL Listed

See page E-1 for warranty information.

86675 – GEM100MLTLC3D-5

Metal Halide

1 – 100W MH M90 or M140 Quad (120/208/240/277V)

- Magnetic ballast construction ideal for a wide variety of lighting applications
- Precision-wound coils, ensuring even heat dissipation and the highest electrical integrity
- Distributor replacement kit contains the appropriate core and coil with color coded leads, a properly rated capacitor and ignitor (if required) and all other components required for ballast replacement
- Quad ballast (120, 208, 240, 277)

General characteristics

Ballast Type	Magnetic – Core and Coil
ANSI Lamp Codes	M92, M90, M140
Voltage	120/208/240/277
Line Voltage Regulation (+/-)	5%
Circuit Type	HX-HPF
Insulation Class	180C
Type of Capacitor	Dry film
Capacitance	12 Mfd GECAP-12/280V-D
Voltage (MIN)	280
Capacitor Temperature Rating	100°C (212°F)
GE Igniter	MH350-1A
Sound Rating	
Additional Info	

Electrical characteristics

Supply Current Frequency	60 Hz

Dimensions

Wiring diagram HID W-(H) – see example on page 18-68	
Case dimensions – Ref Drawing PC1 – see page 18-71	
Length (L)	5.25 in (133 mm)
Width (W)	1.25 in (32 mm)
Mounting dimensions	
Mount Length (M)	4.6 in (117 mm)
Mount Width (X or F)	
Mount Slots (MS)	0.25 in (6 mm)
A	2.0
B	3.0
Weight	5.00 lbs
Exit Type	Side
Nominal Length	2.7 in (69 mm)
Frame Size (H x L)	2.813 in x 3.939 in

Order information

Type	No. Items Per Sales Unit	No. Items Per Standard Package
Distributor Kit	1	6

Specifications by lamp and line voltage

Lamp	Specifications by line voltage	120	208	240	277
M92	System Wattage (W)	119	119	119	119
	Nominal Current	1.10 A	0.60 A	0.50 A	0.50 A
	Ballast Factor	1	1	1	1
	Ballast Efficiency Factor				
	Max Input Current	2.27 A	1.30 A	1.13 A	0.98 A
	Starting Current	1.26 A	0.69 A	0.60 A	0.53 A
	Open Circuit Voltage	274V	274V	274V	274V
	Drop Out Voltage	96V	166V	192V	222V
	Power Factor (>=) %	90	90	90	90
	Min. Starting Temp	-22 / -30	-22 / -30	-22 / -30	-22 / -30
	Fuse Rating	5	4	3	3
	UL Bench Top Rise	D	D	D	D

Lamp	Specifications by line voltage	120	208	240	277
M90, M140 100W Ceramic Metal Halide 100W Quartz Metal Halide	System Wattage (W)	119	119	119	119
	Nominal Current	1.10 A	0.60 A	0.50 A	0.50 A
	Ballast Factor	1	1	1	1
	Ballast Efficiency Factor	0.84	0.84	0.84	0.84
	Max Input Current	2.27 A	1.30 A	1.13 A	0.98 A
	Starting Current	1.26 A	0.69 A	0.60 A	0.53 A
	Open Circuit Voltage	274V	274V	274V	274V
	Drop Out Voltage	96V	166V	192V	222V
	Power factor (>=) %		90	90	90
	Min. starting temperature	-22 / -30	-22 / -30	-22 / -30	-22 / -30
	Fuse rating	5	4	3	3
	UL bench top rise	D	D	D	D

Safety and performance

cUL Listed UL Listed

78519 – GEM100TRILC3-5

Metal Halide

1 – 100W M140 Tri Tap (120/277/347V)

- Magnetic ballast construction ideal for a wide variety of lighting applications
- Precision-wound coils, ensuring even heat dissipation and the highest electrical integrity
- Distributor replacement kit contains the appropriate core and coil with color coded leads, a properly rated capacitor and ignitor (if required) and all other components required for ballast replacement
- Tri Tap ballast (120/277/347)

General characteristics

Ballast Type	Magnetic – Core and Coil
ANSI Lamp Codes	M140
Voltage	120/277/347
Line Voltage Regulation (+/-)	5%
Circuit Type	HX-HPF
Insulation Class	Class N, 200C
Type of Capacitor	Dry film
Capacitance	12 Mfd GECAP-12/280V-D
Voltage (MIN)	300
Capacitor Temperature Rating	105°C (221°F)
GE Igniter	MH350-1A
Sound Rating	
Additional Info	

Electrical characteristics

Supply Current Frequency	50 Hz/60 Hz

Dimensions

Wiring diagram HID W-(L) – see example on page 18-69	
Case dimensions – Ref Drawing PC1 – see page 18-71	
Length (L)	5.25 in (133 mm)
Width (W)	1.25 in (32 mm)
Mounting dimensions	
Mount Length (M)	
Mount Width (X or F)	
Mount Slots (MS)	
A	1.61 in (41 mm)
B	3.07 in (75 mm)
Weight	5.43 lbs
Exit Type	Side
Nominal Length	3.54 in (90 mm)
Frame Size (H x L)	2.82 in (72 mm) x 3.94 in (101 mm)

Order information

Type	No. Items Per Sales Unit	No. Items Per Standard Package
Distributor Kit	1	6

Specifications by lamp and line voltage

Lamp	Specifications by line voltage	120	277	347
M140 100W MH	System Wattage (W)	128	128	128
	Nominal Current	1.16 A	0.50 A	0.40 A
	Ballast Factor	1	1	1
	Ballast Efficiency Factor	0.8	0.8	0.8
	Max Input Current	1.28 A	0.55 A	0.44 A
	Starting Current	1.50 A	1.50 A	1.50 A
	Open Circuit Voltage	230V	230V	230V
	Drop Out Voltage	102V	235V	295V
	Power Factor (>=) %	90	90	90
	Min. Starting Temp	-40 / -40	-40 / -40	-40 / -40
	Fuse Rating	3.5	1.5	1.0
	UL Bench Top Rise	A	A	A

Safety and performance

cUL Listed UL Listed

Metal Halide

HID Electronic and Electromagnetic Ballasts For 20 – 175W Metal Halide HID Lamps

67333 – GEM10048TLA3D-5/2

Metal Halide

1 – 100W MH M90 or M140 480

- Magnetic ballast construction ideal for a wide variety of lighting applications
- Precision-wound coils, ensuring even heat dissipation and the highest electrical integrity
- Distributor replacement kit contains the appropriate core and coil with color coded leads, a properly rated capacitor and ignitor (if required) and all other components required for ballast replacement

General characteristics

Ballast Type	Magnetic – Core and Coil
ANSI Lamp Codes	M90 or M140
Voltage	480
Line Voltage Regulation (+/-)	5%
Circuit Type	HX-HPF
Insulation Class	Class H, 180°C or Class N, 200°C
Type of Capacitor	Dry film
Capacitance	12 Mfd GECAP-12/280V-D
Voltage (MIN)	300
Capacitor Temperature Rating	100°C (212°F)
GE Igniter	MH350-1A
Sound Rating	
Additional Info	

Electrical characteristics

Supply Current Frequency	60 Hz

Order information

Type	No. Items Per Sales Unit	No. Items Per Standard Package
Distributor Kit	1	6

Specifications by lamp and line voltage

Lamp	Specifications by line voltage	
M90, M140		**480**
100W Ceramic Metal Halide	System Wattage (W)	130
	Nominal Current	0.30 A
	Ballast Factor	1
	Ballast Efficiency Factor	0.76
	Max Input Current	0.30 A
	Starting Current	1.40 A
	Open Circuit Voltage	245V
	Drop Out Voltage	346V
	Power Factor (>=)%	90
	Min. Starting Temp (°F/°C)	-20 / -30
	Fuse Rating	1
	UL Bench Top Rise	A or D

Dimensions

Wiring diagram HID W-(F)– see example on page 18-68	
Case dimensions – Ref Drawing PC1 – see page 18-71	
Length (L)	5.25 in (133 mm)
Width (W)	1.25 in (32 mm)
Mounting dimensions	
Mount Length (M)	4.6 in (117 mm)
Mount Width (X or F)	
Mount Slots (MS)	0.25 in (6 mm)
A	1.60
B	2.80
Weight	5.10 lbs
Exit Type	Side
Nominal Length	2.7 in (69 mm)
Frame Size (H x L)	2.813 in x 3.939 in

Safety and performance

cUL Listed UL Listed

86718 – GEM150MLTLC3D-5

Metal Halide

1 – 150W MH M102 or M142 Quad (120/208/240/277V)

- Magnetic ballast construction ideal for a wide variety of lighting applications
- Precision-wound coils, ensuring even heat dissipation and the highest electrical integrity
- Distributor replacement kit contains the appropriate core and coil with color coded leads, a properly rated capacitor and ignitor (if required) and all other components required for ballast replacement
- Quad ballast (120, 208, 240, 277)

General characteristics

Ballast Type	Magnetic – Core and Coil
ANSI Lamp Codes	M142, M102
Voltage	120/208/240/277
Line Voltage Regulation (+/-)	5%
Circuit Type	HX-HPF
Insulation Class	180C
Type of Capacitor	Dry film
Capacitance	16 Mfd GECAP-16/280V-D
Voltage (MIN)	300
Capacitor Temperature Rating	100°C (212°F)
GE Igniter	MH350-1A
Sound Rating	
Additional Info	

Electrical characteristics

Supply Current Frequency	60 Hz

Order information

Type	No. Items Per Sales Unit	No. Items Per Standard Package
Distributor Kit	1	6

Specifications by lamp and line voltage

Lamp	Specifications by line voltage				
M142, M102		**120**	**208**	**240**	**277**
150W Ceramic Metal Halide	System Wattage (W)	186	186	186	186
	Nominal Current	1.60 A	1.00 A	0.80 A	0.70 A
	Ballast Factor	1	1	1	1
	Ballast Efficiency Factor	0.81	0.81	0.81	0.81
150W Quartz Metal Halide	Max Input Current	3.37 A	1.95 A	1.68 A	1.39 A
	Starting Current	1.86 A	1.03 A	0.89 A	0.77 A
	Open Circuit Voltage	257V	257V	257V	257V
	Drop Out Voltage	96V	166V	192V	222V
	Power Factor (>=)%	90	90	90	90
	Min. Starting Temp (°F/°C)	-22 / -30	-22 / -30	-22 / -30	-22 / -30
	Fuse Rating	10	5	5	4
	UL Bench Top Rise	A	B	A	A

Safety and performance

cUL Listed UL Listed

Dimensions

Wiring diagram HID W-(H) – see example on page 18-68	
Case dimensions – Ref Drawing PC1 – see page 18-71	
Length (L)	5.25 in (133 mm)
Width (W)	1.25 in (32 mm)
Mounting dimensions	
Mount Length (M)	4.6 in (117 mm)
Mount Width (X or F)	
Mount Slots (MS)	0.25 in (6 mm)
A	2.3
B	4.0
Weight	7.00 lbs
Exit Type	Side
Nominal Length	2.7 in (69 mm)
Frame Size (H x L)	2.813 in x 3.939 in

See page E-1 for warranty information.

78520 – GEM150TRILC3-5

Metal Halide

1 – 150W M102 Tri Tap (120/277/347V)

- Magnetic ballast construction ideal for a wide variety of lighting applications
- Precision-wound coils, ensuring even heat dissipation and the highest electrical integrity
- Distributor replacement kit contains the appropriate core and coil with color coded leads, a properly rated capacitor and ignitor (if required) and all other components required for ballast replacement
- Tri Tap ballast (120/277/347)

General characteristics

Ballast Type	Magnetic – Core and Coil
ANSI Lamp Codes	M102
Voltage	120/277/347
Line Voltage Regulation (+/-)	5%
Circuit Type	HX-HPF
Insulation Class	Class N, 200C
Type of Capacitor	Dry film
Capacitance	16 Mfd GECAP-16/280V-D
Voltage (MIN)	300
Capacitor Temperature Rating	105°C (221°F)
GE Igniter	MH350-1A
Sound Rating	
Additional Info	

Dimensions

Wiring diagram HID W-(L) – see example on page 18-69	
Case dimensions – Ref Drawing PC1 – see page 18-71	
Length (L)	5.25 in (133 mm)
Width (W)	1.25 in (32 mm)
Mounting dimensions	
Mount Length (M)	
Mount Width (X or F)	
Mount Slots (MS)	
A	2.17 in (55 mm)
B	3.62 in (92 mm)
Weight	6.91 lbs
Exit Type	Side
Nominal Length	3.54 in (90 mm)
Frame Size (H x L)	2.82 in (72 mm) x 3.94 in (101 mm)

Electrical characteristics

Supply Current Frequency	50 Hz/60 Hz

Order information

Type	No. Items Per Sales Unit	No. Items Per Standard Package
Distributor Kit	1	6

Specifications by lamp and line voltage

Lamp	Specifications by line voltage			
M102		**120**	**277**	**347**
150W	System Wattage (W)	190	190	190
MH	Nominal Current	1.7 A	0.75 A	0.59 A
	Ballast Factor	1	1	1
	Ballast Efficiency Factor	0.8	0.8	0.8
	Max Input Current	1.87 A	.83 A	.65 A
	Starting Current	2.30 A	2.30 A	2.30 A
	Open Circuit Voltage	235V	235V	235V
	Drop Out Voltage	102V	235V	295V
	Power Factor (>=)%	90	90	90
	Min. Starting Temp (°F/°C)	-40 / -40	-40 / -40	-40 / -40
	Fuse Rating	5	3	2
	UL Bench Top Rise	A	A	A

Safety and performance cUL Listed UL Listed

86711 – GEM15048TLC3D-5

Metal Halide

1 – 150W MH M102 or M142 480

- Magnetic ballast construction ideal for a wide variety of lighting applications
- Precision-wound coils, ensuring even heat dissipation and the highest electrical integrity
- Distributor replacement kit contains the appropriate core and coil with color coded leads, a properly rated capacitor and ignitor (if required) and all other components required for ballast replacement

General characteristics

Ballast Type	Magnetic – Core and Coil
ANSI Lamp Codes	M142, M102, M107
Voltage	480
Line Voltage Regulation (+/-)	5%
Circuit Type	HX-HPF
Insulation Class	180C
Type of Capacitor	Dry film
Capacitance	16 Mfd GECAP-16/280V-D
Voltage (MIN)	280
Capacitor Temperature Rating	100°C (212°F)
GE Igniter	MH350-1A
Sound Rating	
Additional Info	

Dimensions

Wiring diagram HID W-(E) – see example on page 18-68	
Case dimensions – Ref Drawing PC1 – see page 18-71	
Length (L)	5.25 in (133 mm)
Width (W)	1.25 in (32 mm)
Mounting dimensions	
Mount Length (M)	4.6 in (117 mm)
Mount Width (X or F)	
Mount Slots (MS)	0.25 in (6 mm)
A	2.3
B	3.9
Weight	7.00 lbs
Exit Type	Side
Nominal Length	2.7 in (69 mm)
Frame Size (H x L)	2.813 in x 3.939 in

Electrical characteristics

Supply Current Frequency	60 Hz

Order information

Type	No. Items Per Sales Unit	No. Items Per Standard Package
Distributor Kit	1	6

Specifications by lamp and line voltage

Lamp	Specifications by line voltage		Lamp	Specifications by line voltage	
M102, M142		**480**	**M107**		**480**
150W Ceramic Metal Halide	System Wattage (W)	185		System Wattage (W)	185
	Nominal Current	0.40 A		Nominal Current	0.40 A
150W Quartz Metal Halide	Ballast Factor	1		Ballast Factor	1
	Ballast Efficiency Factor	0.81		Ballast Efficiency Factor	0.83
	Max Input Current	0.85 A		Max Input Current	0.85 A
	Starting Current	0.38 A		Starting Current	0.38 A
	Open Circuit Voltage	264V		Open Circuit Voltage	264V
	Drop Out Voltage	384V		Drop Out Voltage	384V
	Power Factor (>=)%	90		Power Factor (>=)%	90
	Min. Starting Temp (°F/°C)	-22 / -30		Min. Starting Temp (°F/°C)	-22 / -30
	Fuse Rating	2		Fuse Rating	2
	UL Bench Top Rise	E		UL Bench Top Rise	E

Safety and performance cUL Listed UL Listed

See page E-1 for warranty information.

Metal Halide

HID Electronic and Electromagnetic Ballasts For 20 – 175W Metal Halide HID Lamps

87210 – GEM175ML5AC3-5

Metal Halide

1 – 175W MH M57 5-Tap (120/208/240/277/480V)

- Magnetic ballast construction ideal for a wide variety of lighting applications
- Precision-wound coils, ensuring even heat dissipation and the highest electrical integrity
- Distributor replacement kit contains the appropriate core and coil with color coded leads, a properly rated capacitor and ignitor (if required) and all other components required for ballast replacement
- 5-tap ballast (120, 208, 240, 277, or 480 Volt) featuring a 480-Volt tap

General characteristics

Ballast Type	Magnetic – Core and Coil
ANSI Lamp Codes	M57, H39, M109
Voltage	120/208/240/277/480
Line Voltage Regulation (+/-)	10%
Circuit Type	CWA
Insulation Class	180C
Type of Capacitor	Oil filled
Capacitance	10 Mfd GECAP-10/400V-O
Voltage (MIN)	400
Capacitor Temperature Rating	100°C (212°F)
GE Igniter	
Sound Rating	
Additional Info	

Electrical characteristics

Supply Current Frequency	60 Hz

Order information

Type	No. Items Per Sales Unit	No. Items Per Standard Package
Distributor Kit	1	6

Dimensions

Wiring diagram HID W-(K) – see example on page 18-69	
Case dimensions – Ref Drawing PC1 – see page 18-71	
Length (L)	5.25 in (133 mm)
Width (W)	1.25 in (32 mm)
Mounting dimensions	
Mount Length (M)	4.6 in (117 mm)
Mount Width (X or F)	
Mount Slots (MS)	0.25 in (6 mm)
A	3.0
B	4.0
Weight	3.40 lbs
Exit Type	Side
Nominal Length	2.7 in (69 mm)
Frame Size (H x L)	2.813 in x 3.939 in
Lead lengths	
Orange	
Violet and Black	
Violet/White	
Black/Yellow	

Specifications by lamp and line voltage

Lamp	Specifications by line voltage	120	208	240	277	480
M57, M109	System Wattage (W)	202	202	202	202	202
	Nominal Current	1.70 A	1.00 A	0.90 A	0.80 A	0.40 A
	Ballast Factor	1	1	1	1	1
	Ballast Efficiency Factor	0.87	0.87	0.87	0.87	0.87
	Max Input Current	1.70 A	1.00 A	0.90 A	0.80 A	0.40 A
	Starting Current	0.60 A	0.37 A	0.32 A	0.28 A	0.21 A
	Open Circuit Voltage	307V	307V	307V	307V	307V
	Drop Out Voltage	96V	166V	192V	222V	384V
	Power Factor (>=)%	90	90	90	90	90
	Min. Starting Temp (°F/°C)	-22 / -30	-22 / -30	-22 / -30	-22 / -30	-22 / -30
	Fuse Rating	5	3	3	2	1.5
	UL Bench Top Rise	D	C	C	C	C

Safety and performance

cUL Listed UL Listed

86741 – GEM175MLTAC3-5

Metal Halide

1 – 175W MH M57 Quad (120/208/240/277V)

- Magnetic ballast construction ideal for a wide variety of lighting applications
- Precision-wound coils, ensuring even heat dissipation and the highest electrical integrity
- Distributor replacement kit contains the appropriate core and coil with color coded leads, a properly rated capacitor and ignitor (if required) and all other components required for ballast replacement
- Quad ballast (120, 208, 240, 277)

General characteristics

Ballast Type	Magnetic – Core and Coil
ANSI Lamp Codes	M57, M107
Voltage	120/208/240/277
Line Voltage Regulation (+/-)	10%
Circuit Type	CWA
Insulation Class	180C
Type of Capacitor	Oil filled
Capacitance	10 Mfd GECAP-10/400V-O
Voltage (MIN)	400
Capacitor Temperature Rating	100°C (212°F)
GE Igniter	
Sound Rating	
Additional Info	

Dimensions

Wiring diagram HID W-(C) – see example on page 18-68	
Case dimensions – Ref Drawing PC1 – see page 18-71	
Length (L)	5.25 in (133 mm)
Width (W)	1.25 in (32 mm)
Mounting dimensions	
Mount Length (M)	4.6 in (117 mm)
Mount Width (X or F)	
Mount Slots (MS)	0.25 in (6 mm)
A	1.0
B	2.0
Weight	3.40 lbs
Exit Type	Side
Nominal Length	2.7 in (69 mm)
Frame Size (H x L)	2.813 in x 3.939 in

Electrical characteristics

Supply Current Frequency	60 Hz

Order information

Type	No. Items Per Sales Unit	No. Items Per Standard Package
Distributor Kit	1	6

Specifications by lamp and line voltage

Lamp	Specifications by line voltage	120	208	240	277
M57	System Wattage (W)	210	210	210	210
175W Quartz Metal Halide	Nominal Current	1.80 A	1.00 A	0.90 A	0.80 A
	Ballast Factor	1	1	1	1
150W Quartz Metal Halide	Ballast Efficiency Factor	0.83	0.83	0.83	0.83
	Max Input Current	1.80 A	1.00 A	0.90 A	0.80 A
	Starting Current	0.96 A	0.56 A	0.48 A	0.42 A
	Open Circuit Voltage	302V	302V	302V	302V
	Drop Out Voltage	96V	166V	192V	222V
	Power Factor (>=) %	90	90	90	90
	Min. Starting Temp	-22 / -30	-22 / -30	-22 / -30	-22 / -30
	Fuse Rating	5	3	3	2
	UL Bench Top Rise	B	B	B	C

Lamp	Specifications by line voltage	120	208	240	277
M107	System Wattage (W)	210	210	210	210
	Nominal Current	1.80 A	1.00 A	0.90 A	0.80 A
	Ballast Factor	1	1	1	1
	Ballast Efficiency Factor				
	Max Input Current	1.80 A	1.00 A	0.90 A	0.80 A
	Starting Current	0.96 A	0.56 A	0.48 A	0.42 A
	Open Circuit Voltage	302V	302V	302V	302V
	Drop Out Voltage	96V	166V	192V	222V
	Power factor (>=) %	90	90	90	90
	Min. starting temperature	-22 / -30	-22 / -30	-22 / -30	-22 / -30
	Fuse rating	5	3	3	2
	UL bench top rise	B	B	B	C

Safety and performance

cUL Listed UL Listed

See page E-1 for warranty information.

78521 – GEM175TRIAC3-5

Metal Halide

1 – 175W M57 Tri Tap (120/277/347V)

- Magnetic ballast construction ideal for a wide variety of lighting applications
- Precision-wound coils, ensuring even heat dissipation and the highest electrical integrity
- Distributor replacement kit contains the appropriate core and coil with color coded leads, a properly rated capacitor and ignitor (if required) and all other components required for ballast replacement
- Tri Tap ballast (120/277/347)

General characteristics

Ballast Type	Magnetic – Core and Coil
ANSI Lamp Codes	M57
Voltage	120/277/347
Line Voltage Regulation (+/-)	10%
Circuit Type	CWA
Insulation Class	Class N, 200C
Type of Capacitor	Oil filled
Capacitance	12 Mfd
Voltage (MIN)	450
Capacitor Temperature Rating	105°C (221°F)
GE Igniter	
Sound Rating	
Additional Info	

Electrical characteristics

Supply Current Frequency	60 Hz

Order information

Type	No. Items Per Sales Unit	No. Items Per Standard Package
Distributor Kit	1	6

Specifications by lamp and line voltage

Lamp	Specifications by line voltage			
M57		**120**	**277**	**347**
150W	System Wattage (W)	208	208	208
MH	Nominal Current	1.88 A	.85 A	.65 A
	Ballast Factor	1	1	1
	Ballast Efficiency Factor	0.82	0.82	0.82
	Max Input Current	2.07 A	.94 A	.72 A
	Starting Current	1.88 A	1.88 A	1.88 A
	Open Circuit Voltage	295V	295V	295V
	Drop Out Voltage	72V	166V	208V
	Power Factor (>=) %	90	90	90
	Min. Starting Temp	-20 / -29	-20 / -29	-20 / -29
	Fuse Rating	6	3	2
	UL Bench Top Rise	A	A	A

Safety and performance

cUL Listed UL Listed

Dimensions

Wiring diagram HID W-(M) – see example on page 18-69	
Case dimensions – Ref Drawing PC1 – see page 18-71	
Length (L)	5.25 in (133 mm)
Width (W)	1.25 in (32 mm)
Mounting dimensions	
Mount Length (M)	
Mount Width (X or F)	
Mount Slots (MS)	
A	2.17 in (55 mm)
B	3.62 in (92 mm)
Weight	6.91 lbs
Exit Type	Side
Nominal Length	3.54 in (90 mm)
Frame Size (H x L)	2.82 in (72 mm) x 3.94 in (101 mm)

See page E-1 for warranty information.

Metal Halide

HID Electronic and Electromagnetic Ballasts For 250 – 1500W Metal Halide HID Lamps

87211 – GEM250ML5AC3-5

Metal Halide

1 – 250W MH M58 5-Tap (120/208/240/277/480V)

- Magnetic ballast construction ideal for a wide variety of lighting applications
- Precision-wound coils, ensuring even heat dissipation and the highest electrical integrity
- Distributor replacement kit contains the appropriate core and coil with color coded leads, a properly rated capacitor and ignitor (if required) and all other components required for ballast replacement
- 5-tap ballast (120, 208, 240, 277, or 480 volt) featuring a 480-volt tap

General characteristics

Ballast Type	Magnetic – Core and Coil
ANSI Lamp Codes	M58
Voltage	120/208/240/277/480
Line Voltage Regulation (+/-)	10%
Circuit Type	CWA
Insulation Class	180C
Type of Capacitor	Oil filled
Capacitance	15 Mfd GECAP-15/400V-O
Voltage (MIN)	400
Capacitor Temperature Rating	100°C (212°F)
GE Igniter	
Sound Rating	
Additional Info	

Electrical characteristics

Supply Current Frequency	60 Hz

Order information

Type	No. Items Per Sales Unit	No. Items Per Standard Package
Distributor Kit	1	6

Dimensions

Wiring diagram HID W-(K) – see example on page 18-69	
Case dimensions – Ref Drawing PC1 – see page 18-71	
Length (L)	5.25 in (133 mm)
Width (W)	1.25 in (32 mm)
Mounting dimensions	
Mount Length (M)	4.6 in (117 mm)
Mount Width (X or F)	
Mount Slots (MS)	0.25 in (6 mm)
A	3.0
B	4.3
Weight	9.00 lbs
Exit Type	Side
Nominal Length	3.2 in (83 mm)
Frame Size (H x L)	2.813 in x 3.939 in
Lead lengths	
Orange	
Violet and Black	
Violet/White	
Black/Yellow	

Specifications by lamp and line voltage

Lamp	Specifications by line voltage					
M58		**120**	**208**	**240**	**277**	**480**
250W Quartz Metal Halide	System Wattage (W)	280	280	280	280	280
	Nominal Current	2.50 A	1.40 A	1.25 A	1.10 A	0.65 A
	Ballast Factor	1	1	1	1	1
	Ballast Efficiency Factor	0.89	0.89	0.89	0.89	0.89
	Max Input Current	2.60 A	1.60 A	1.30 A	1.20 A	0.70 A
	Starting Current	1.50 A	1.00 A	0.80 A	0.70 A	0.50 A
	Open Circuit Voltage	290V	290V	290V	290V	290V
	Drop Out Voltage	96V	166V	192V	222V	384V
	Power Factor (>=)%	90	90	90	90	90
	Min. Starting Temp (°F/°C)	-22 / -30	-22 / -30	-22 / -30	-22 / -30	-22 / -30
	Fuse Rating	8	5	4	3	2
	UL Bench Top Rise	B	B	B	C	C

Safety and performance cUL Listed UL Listed

86765 – GEM250MLTAC3-5

Metal Halide

1 – 250W MH M58 Quad (120/208/240/277V)

- Magnetic ballast construction ideal for a wide variety of lighting applications
- Precision-wound coils, ensuring even heat dissipation and the highest electrical integrity
- Distributor replacement kit contains the appropriate core and coil with color coded leads, a properly rated capacitor and ignitor (if required) and all other components required for ballast replacement
- Quad ballast (120, 208, 240, 277)

General characteristics

Ballast Type	Magnetic – Core and Coil
ANSI Lamp Codes	M58
Voltage	120/208/240/277
Line Voltage Regulation (+/-)	10%
Circuit Type	CWA
Insulation Class	180C
Type of Capacitor	Oil filled
Capacitance	15 Mfd GECAP-15/400V-O
Voltage (MIN)	400
Capacitor Temperature Rating	100°C (212°F)
GE Igniter	
Sound Rating	
Additional Info	

Electrical characteristics

Supply Current Frequency	60 Hz

Order information

Type	No. Items Per Sales Unit	No. Items Per Standard Package
Distributor Kit	1	6

Dimensions

Wiring diagram HID W-(C) – see example on page 18-68	
Case dimensions – Ref Drawing PC1 – see page 18-71	
Length (L)	5.25 in (133 mm)
Width (W)	1.25 in (32 mm)
Mounting dimensions	
Mount Length (M)	4.6 in (117 mm)
Mount Width (X or F)	
Mount Slots (MS)	0.25 in (6 mm)
A	3.0
B	4.3
Weight	9.00 lbs
Exit Type	Side
Nominal Length	3.2 in (83 mm)
Frame Size (H x L)	2.813 in x 3.939 in

Specifications by lamp and line voltage

Lamp	Specifications by line voltage				
M58		**120**	**208**	**240**	**277**
250W Quartz Metal Halide	System Wattage (W)	294	294	294	294
	Nominal Current	2.65 A	1.50 A	1.30 A	1.13 A
	Ballast Factor	1	1	1	1
	Ballast Efficiency Factor	0.85	0.85	0.85	0.85
	Max Input Current	2.60 A	1.58 A	1.30 A	1.12 A
	Starting Current	1.88 A	1.15 A	0.95 A	0.86 A
	Open Circuit Voltage	315V	315V	315V	315V
	Drop Out Voltage	96V	166V	192V	222V
	Power Factor (>=)%	90	90	90	90
	Min. Starting Temp (°F/°C)	-22 / -30	-22 / -30	-22 / -30	-22 / -30
	Fuse Rating	8	5	4	3
	UL Bench Top Rise	C	D	C	C

Safety and performance cUL Listed UL Listed

See page E-1 for warranty information.

78522 – GEM250TRIAC4-5

Metal Halide

1 – 250W M58 Tri Tap (120/277/347V)

- Magnetic ballast construction ideal for a wide variety of lighting applications
- Precision-wound coils, ensuring even heat dissipation and the highest electrical integrity
- Distributor replacement kit contains the appropriate core and coil with color coded leads, a properly rated capacitor and ignitor (if required) and all other components required for ballast replacement
- Tri Tap ballast (120/277/347)

General characteristics

Ballast Type	Magnetic – Core and Coil
ANSI Lamp Codes	M58
Voltage	120/277/347
Line Voltage Regulation (+/-)	10%
Circuit Type	CWA
Insulation Class	Class N, 200C
Type of Capacitor	Oil filled
Capacitance	15 Mfd GECAP-15/400V-O
Voltage (MIN)	450
Capacitor Temperature Rating	105°C (221°F)
GE Igniter	
Sound Rating	
Additional Info	

Electrical characteristics

Supply Current Frequency	50 Hz/60 Hz

Order information

Type	No. Items Per Sales Unit	No. Items Per Standard Package
Distributor Kit	1	6

Dimensions

Wiring diagram HID W-(M) – see example on page 18-69	
Case dimensions – Ref Drawing PC1 – see page 18-71	
Length (L)	5.25 in (133 mm)
Width (W)	1.25 in (32 mm)
Mounting dimensions	
Mount Length (M)	
Mount Width (X or F)	
Mount Slots (MS)	
A	2.17 in (55 mm)
B	3.62 in (92 mm)
Weight	10.02 lbs
Exit Type	Side
Nominal Length	4.37 in (111 mm)
Frame Size (H x L)	4.25 in (108 mm) x 4.75 in (121 mm)

Specifications by lamp and line voltage

Lamp	Specifications by line voltage			
M58		**120**	**277**	**347**
250W	System Wattage (W)	290	290	290
MH	Nominal Current	2.5A	1.08A	0.86A
	Ballast Factor	1	1	1
	Ballast Efficiency Factor	0.85	0.85	0.85
	Max Input Current	2.75 A	1.19 A	0.95 A
	Starting Current	2.30 A	2.30 A	2.30 A
	Open Circuit Voltage	305V	305V	305V
	Drop Out Voltage	72V	166V	208V
	Power Factor (>=)%	90	90	90
	Min. Starting Temp (°F/°C)	-20 / -29	-20 / -29	-20 / -29
	Fuse Rating	8	3	3
	UL Bench Top Rise	A	A	A

Safety and performance

cUL Listed UL Listed

87212 – GEM250ML5AC4-5

Metal Halide

1 – 250W MH M58 or 5-Tap (120/208/240/277/480V)

- Magnetic ballast construction ideal for a wide variety of lighting applications
- Precision-wound coils, ensuring even heat dissipation and the highest electrical integrity
- Distributor replacement kit contains the appropriate core and coil with color coded leads, a properly rated capacitor and ignitor (if required) and all other components required for ballast replacement
- 5-tap ballast (120, 208, 240, 277, or 480 volt) featuring a 480-volt tap

General characteristics

Ballast Type	Magnetic – Core and Coil
ANSI Lamp Codes	M58
Voltage	120/208/240/277/480
Line Voltage Regulation (+/-)	10%
Circuit Type	CWA
Insulation Class	180C
Type of Capacitor	Oil filled
Capacitance	15 Mfd GECAP-15/400V-O
Voltage (MIN)	400
Capacitor Temperature Rating	100°C (212°F)
GE Igniter	
Sound Rating	
Additional Info	

Electrical characteristics

Supply Current Frequency	60 Hz

Order information

Type	No. Items Per Sales Unit	No. Items Per Standard Package
Distributor Kit	1	3

Dimensions

Wiring diagram HID W-(K) – see example on page 18-69	
Case dimensions – Ref Drawing PC2 – see page 18-71	
Length (L)	5.25 in (133 mm)
Width (W)	1.25 in (32 mm)
Mounting dimensions	
Mount Length (M)	4.6 in (117 mm)
Mount Width (X or F)	
Mount Slots (MS)	0.25 in (6 mm)
A	1.8
B	3.6
Weight	10.80 lbs
Exit Type	Side
Nominal Length	3.2 in (83 mm)
Frame Size (H x L)	4.25 in x 4.75 in
Lead lengths	
Orange	
Violet and Black	
Violet/White	
Black/Yellow	

Specifications by lamp and line voltage

Lamp	Specifications by line voltage					
M58		**120**	**208**	**240**	**277**	**480**
	System Wattage (W)	293	293	293	293	293
	Nominal Current	4.00 A	2.30 A	2.00 A	1.70 A	1.00 A
	Ballast Factor	1	1	1	1	1
	Ballast Efficiency Factor	0.85	0.85	0.85	0.85	0.85
	Max Input Current	2.50 A	1.40 A	1.30 A	1.10 A	0.65 A
	Starting Current	2.50 A	1.40 A	1.20 A	1.00 A	0.60 A
	Open Circuit Voltage	300V	300V	300V	300V	300V
	Drop Out Voltage	96V	166V	192V	222V	384V
	Power Factor (>=)%	90	90	90	90	90
	Min. Starting Temp (°F/°C)	-22 / -30	-22 / -30	-22 / -30	-22 / -30	-22 / -30
	Fuse Rating	8	5	4	3	2
	UL Bench Top Rise	A	A	A	A	A

Safety and performance

cUL Listed UL Listed

See page E-1 for warranty information.

Metal Halide
HID Electronic and Electromagnetic Ballasts For 250 – 1500W Metal Halide HID Lamps

78523 – GEM400TRIAC4-5

Metal Halide

1 – 400W M59 Tri Tap (120/277/347V)

- Magnetic ballast construction ideal for a wide variety of lighting applications
- Precision-wound coils, ensuring even heat dissipation and the highest electrical integrity
- Distributor replacement kit contains the appropriate core and coil with color coded leads, a properly rated capacitor and ignitor (if required) and all other components required for ballast replacement
- Tri Tap ballast (120/277/347)

General characteristics

Ballast Type	Magnetic – Core and Coil
ANSI Lamp Codes	M59
Voltage	120/277/347
Line Voltage Regulation (+/-)	10%
Circuit Type	CWA
Insulation Class	Class N, 200C
Type of Capacitor	Oil filled
Capacitance	24 Mfd GECAP-24/480V-O
Voltage (MIN)	450
Capacitor Temperature Rating	105°C (221°F)
GE Igniter	
Sound Rating	
Additional Info	

Electrical characteristics

Supply Current Frequency	50 Hz/60 Hz

Order information

Type	No. Items Per Sales Unit	No. Items Per Standard Package
Distributor Kit	1	3

Dimensions

Wiring diagram HID W-(M) – see example on page 18-69	
Case dimensions – Ref Drawing PC2 – see page 18-71	
Length (L)	5.25 in (133 mm)
Width (W)	1.25 in (32 mm)
Mounting dimensions	
Mount Length (M)	
Mount Width (X or F)	
Mount Slots (MS)	
A	2.17 in (55 mm)
B	4.06 in (103 mm)
Weight	11.11 lbs
Exit Type	Side
Nominal Length	4.37 in (111 mm)
Frame Size (H x L)	4.25 in (108 mm) x 4.75 in (121 mm)
Lead lengths	
Orange	
Violet and Black	
Violet/White	
Black/Yellow	

Specifications by lamp and line voltage

Lamp	Specifications by line voltage			
M59		**120**	**277**	**347**
400W	System Wattage (W)	460	460	460
MH	Nominal Current	4.0 A	1.75 A	1.38 A
	Ballast Factor	1	1	1
	Ballast Efficiency Factor	0.86	0.86	0.86
	Max Input Current	4.40 A	1.93 A	1.52 A
	Starting Current	4.00 A	4.00 A	4.00 A
	Open Circuit Voltage	305V	305V	305V
	Drop Out Voltage	72V	166V	208V
	Power Factor (>=)%	90	90	90
	Min. Starting Temp (°F/°C)	-20 / -29	-20 / -29	-20 / -29
	Fuse Rating	8	3	3
	UL Bench Top Rise	A	A	B

Safety and performance cUL Listed UL Listed

72300 – GEM400ML5AA4-5/2

Metal Halide

1 – 400W M59 or H33 5-Tap (120/208/240/277/480V) A1 C&C

- Magnetic ballast construction ideal for a wide variety of lighting applications
- Precision-wound coils, ensuring even heat dissipation and the highest electrical integrity
- Distributor replacement kit contains the appropriate core and coil with color coded leads, a properly rated capacitor and ignitor (if required) and all other components required for ballast replacement
- 5-tap ballast (120, 208, 240, 277, or 480 Volt) featuring a 480-Volt tap

General characteristics

Ballast Type	Magnetic – Core and Coil
ANSI Lamp Codes	M59
Voltage	120/208/240/277/480
Line Voltage Regulation (+/-)	10%
Circuit Type	CWA
Insulation Class	Class H, 180°C or Class N, 200°C
Type of Capacitor	Oil filled
Capacitance	24 Mfd GECAP-24/400V-O
Voltage (MIN)	450
Capacitor Temperature Rating	105°C (221°F)
GE Igniter	
Sound Rating	
Additional Info	

Electrical characteristics

Supply Current Frequency	60 Hz

Order information

Type	No. Items Per Sales Unit	No. Items Per Standard Package
Distributor Kit	1	3

Dimensions

Wiring diagram HID W-(K) – see example on page 18-69	
Case dimensions – Ref Drawing PC2 – see page 18-71	
Length (L)	5.25 in (133 mm)
Width (W)	1.25 in (32 mm)
Mounting dimensions	
Mount Length (M)	4.6 in (117 mm)
Mount Width (X or F)	
Mount Slots (MS)	0.25 in (6 mm)
A	2.17
B	3.90
Weight	10.8 lbs
Exit Type	Side
Nominal Length	3.7 in (95 mm)
Frame Size (H x L)	4.25 in x 4.75 in
Lead lengths	
Orange	
Violet and Black	
Violet/White	
Black/Yellow	

Specifications by lamp and line voltage

Lamp	Specifications by line voltage					
M59		**120**	**208**	**240**	**277**	**480**
400W Quartz	System Wattage (W)	461	461	461	461	461
Metal Halide	Nominal Current	4.0 A	2.3 A	2.0 A	1.75 A	1.00 A
	Ballast Factor	1	1	1	1	1
360W Quartz	Ballast Efficiency Factor	0.86	0.86	0.86	0.86	0.86
Metal Halide	Max Input Current	4.0 A	2.3 A	2.0 A	1.75 A	1.00 A
	Starting Current	3.90 A	3.90 A	3.90 A	3.90 A	3.90 A
	Open Circuit Voltage	300V	300V	300V	300V	300V
	Drop Out Voltage	580V	580V	580V	580V	580V
	Power Factor (>=)%	90	90	90	90	90
	Min. Starting Temp (°F/°C)	-22 / -30	-22 / -30	-22 / -30	-22 / -30	-22 / -30
	Fuse Rating	8	5	4	3	2
	UL Bench Top Rise	D or A	D or A	D or A	D or A	D or A

Safety and performance cUL Listed UL Listed

See page E-1 for warranty information.

72149 – GEM400MLTAA4-5

Metal Halide

1 – 400W MH M59 Quad (120/208/240/277V) A1 C&C

- Magnetic ballast construction ideal for a wide variety of lighting applications
- Precision-wound coils, ensuring even heat dissipation and the highest electrical integrity
- Distributor replacement kit contains the appropriate core and coil with color coded leads, a properly rated capacitor and ignitor (if required) and all other components required for ballast replacement
- Quad ballast (120, 208, 240, 277)

General characteristics

Ballast Type	Magnetic – Core and Coil
ANSI Lamp Codes	M59
Voltage	120/208/240/277
Line Voltage Regulation (+/-)	10%
Circuit Type	CWA
Insulation Class	Class H, 180°C or Class N, 200°C
Type of Capacitor	Oil filled
Capacitance	24 Mfd GECAP-24/400V-O
Voltage (MIN)	450
Capacitor Temperature Rating	105°C (221°F)
GE Igniter	
Sound Rating	
Additional Info	

Dimensions

Wiring diagram HID W-(C) – see example on page 18-68	
Case dimensions – Ref Drawing PC2 – see page 18-71	
Length (L)	5.25 in (133 mm)
Width (W)	1.25 in (32 mm)
Mounting dimensions	
Mount Length (M)	4.6 in (117 mm)
Mount Width (X or F)	
Mount Slots (MS)	0.25 in (6 mm)
A	2.17
B	3.90
Weight	10.80 lbs
Exit Type	Side
Nominal Length	3.7 in (95 mm)
Frame Size (H x L)	4.25 in x 4.75 in

Electrical characteristics

Supply Current Frequency	60 Hz

Order information

Type	No. Items Per Sales Unit	No. Items Per Standard Package
Distributor Kit	1	3

Specifications by lamp and line voltage

Lamp	Specifications by line voltage				
M59		**120**	**208**	**240**	**277**
400W Quartz Metal Halide	System Wattage (W)	457	457	457	457
	Nominal Current	4.0 A	2.30 A	2.00 A	1.75 A
360W Quartz Metal Halide	Ballast Factor	1	1	1	1
	Ballast Efficiency Factor	0.93	0.93	0.93	0.93
	Max Input Current	4.0 A	2.30 A	2.00 A	1.75 A
	Starting Current	3.80 A	3.80 A	3.80 A	3.80 A
	Open Circuit Voltage	300V	300V	300V	300V
	Drop Out Voltage	580V	580V	580V	580V
	Power Factor (>=)%	90	90	90	90
	Min. Starting Temp (°F/°C)	-22 / -30	-22 / -30	-22 / -30	-22 / -30
	Fuse Rating	8	5	4	3
	UL Bench Top Rise	D or A	D or A	D or A	D or A

Safety and performance cUL Listed UL Listed

63070 – GEM40048TAA4 – 5/2

Metal Halide

1 – 400W MH M59 480

- Magnetic ballast construction ideal for a wide variety of lighting applications
- Precision-wound coils, ensuring even heat dissipation and the highest electrical integrity
- Distributor replacement kit contains the appropriate core and coil with color coded leads, a properly rated capacitor and ignitor (if required) and all other components required for ballast replacement

General characteristics

Ballast Type	Magnetic – Core and Coil
ANSI Lamp Codes	M59
Voltage	480
Line Voltage Regulation (+/-)	10%
Circuit Type	CWA
Insulation Class	Class H, 180°C or Class N, 200°C
Type of Capacitor	Oil filled
Capacitance	24 Mfd GECAP-24/400V-O
Voltage (MIN)	400
Capacitor Temperature Rating	105°C (221°F)
GE Igniter	
Sound Rating	
Additional Info	

Dimensions

Wiring diagram HID W-(J) – see example on page 18-68	
Case dimensions – Ref Drawing PC2 – see page 18-71	
Length (L)	5.25 in (133 mm)
Width (W)	1.25 in (32 mm)
Mounting dimensions	
Mount Length (M)	4.6 in (117 mm)
Mount Width (X or F)	
Mount Slots (MS)	0.25 in (6 mm)
A	2.17
B	3.90
Weight	11.50 lbs
Exit Type	Side
Nominal Length	3.7 in (95 mm)
Frame Size (H x L)	4.25 in x 4.75 in

Electrical characteristics

Supply Current Frequency	60 Hz

Order information

Type	No. Items Per Sales Unit	No. Items Per Standard Package
Distributor Kit	1	3

Specifications by lamp and line voltage

Lamp	Specifications by line voltage	
M59		**480**
400W Quartz Metal Halide	System Wattage (W)	460
	Nominal Current	1.00 A
360W Quartz Metal Halide	Ballast Factor	1
	Ballast Efficiency Factor	0.90
	Max Input Current	1.00 A
	Starting Current	3.80 A
	Open Circuit Voltage	295V
	Drop Out Voltage	560V
	Power Factor (>=)%	90
	Min. Starting Temp (°F/°C)	-22 / -30
	Fuse Rating	2
	UL Bench Top Rise	D or A

Safety and performance cUL Listed UL Listed

See page E-1 for warranty information.

Metal Halide

HID Electronic and Electromagnetic Ballasts For 250 – 1500W Metal Halide HID Lamps

63069 – GEM100048TAC5-5/2

Metal Halide

1 – 1000W MH M47 480

- Magnetic ballast construction ideal for a wide variety of lighting applications.
- Precision-wound coils, ensuring even heat dissipation and the highest electrical integrity.
- Distributor replacement kit contains the appropriate core and coil with color coded leads, a properly rated capacitor and ignitor (if required) and all other components required for ballast replacement

General characteristics

Ballast Type	Magnetic – Core and Coil
ANSI Lamp Codes	M47
Voltage	480
Line Voltage Regulation (+/-)	10%
Circuit Type	CWA
Insulation Class	Class H, 180°C or Class N, 200°C
Type of Capacitor	Oil filled
Capacitance	24 Mfd GECAP-24/480V-O
Voltage (MIN)	480
Capacitor Temperature Rating	105°C (221°F)
GE Igniter	
Sound Rating	
Additional Info	

Electrical characteristics

Supply Current Frequency	60 Hz

Order information

Type	No. Items Per Sales Unit	No. Items Per Standard Package
Distributor Kit	1	2

Dimensions

Wiring diagram HID W-(J) – see example on page 18-68	
Case dimensions – Ref Drawing PC3 – see page 18-71	
Length (L)	7.75 in (197 mm)
Width (W)	2.75 in (70 mm)
Mounting dimensions	
Mount Length (M)	6.1 in (155 mm)
Mount Width (X or F)	
Mount Slots (MS)	0.25 in (6 mm)
A	3.25
B	5.20
Weight	21.30 lbs
Exit Type	Side
Nominal Length	3.7 in (95 mm)
Frame Size (H x L)	4.25 in x 6.00 in

Specifications by lamp and line voltage

Lamp	Specifications by line voltage	
M47		**480**
1000W Quartz Metal Halide	System Wattage (W)	1,050
	Nominal Current	2.25 A
	Ballast Factor	1
	Ballast Efficiency Factor	1
	Max Input Current	2.25 A
	Starting Current	5.60 A
	Open Circuit Voltage	420V
	Drop Out Voltage	840V
	Power Factor (>=)%	90
	Min. Starting Temp (°F/°C)	-22 / -30
	Fuse Rating	5
	UL Bench Top Rise	D or A

Safety and performance cUL Listed UL Listed

87213 – GEM1000ML5AA5-5/2

Metal Halide

1 – 1000W MH M47 5-Tap (120/208/240/277/480V)

- Magnetic ballast construction ideal for a wide variety of lighting applications
- Precision-wound coils, ensuring even heat dissipation and the highest electrical integrity
- Distributor replacement kit contains the appropriate core and coil with color coded leads, a properly rated capacitor and ignitor (if required) and all other components required for ballast replacement
- 5-tap ballast (120, 208, 240, 277, or 480 Volt) featuring a 480-Volt tap

General characteristics

Ballast Type	Magnetic – Core and Coil
ANSI Lamp Codes	M47
Voltage	120/208/240/277/480
Line Voltage Regulation (+/-)	10%
Circuit Type	CWA
Insulation Class	Class H, 180°C or Class N, 200°C
Type of Capacitor	Oil filled
Capacitance	24 Mfd GECAP-24/480V-O
Voltage (MIN)	480
Capacitor Temperature Rating	105°C (221°F)
GE Igniter	
Sound Rating	
Additional Info	

Electrical characteristics

Supply Current Frequency	60 Hz

Order information

Type	No. Items Per Sales Unit	No. Items Per Standard Package
Distributor Kit	1	2

Dimensions

Wiring diagram HID W-(K) – see example on page 18-69	
Case dimensions – Ref Drawing PC3 – see page 18-71	
Length (L)	7.75 in (197 mm)
Width (W)	2.75 in (70 mm)
Mounting dimensions	
Mount Length (M)	6.1 in (155 mm)
Mount Width (X or F)	
Mount Slots (MS)	0.25 in (6 mm)
A	3.0
B	5.0
Weight	21.00 lbs
Exit Type	Side
Nominal Length	3.7 in (95 mm)
Frame Size (H x L)	4.25 in x 6.00 in
Lead lengths	
Orange	
Violet and Black	
Violet/White	
Black/Yellow	

Specifications by lamp and line voltage

Lamp	Specifications by line voltage					
M47		**120**	**208**	**240**	**277**	**480**
1000W Quartz Metal Halide	System Wattage (W)	1,050	1,050	1,050	1,050	1,050
	Nominal Current	9.00 A	5.20 A	4.50 A	3.90 A	2.25 A
	Ballast Factor	1	1	1	1	1
	Ballast Efficiency Factor	0.91	0.91	0.91	0.91	0.91
	Max Input Current	9.00 A	5.20 A	4.50 A	3.90 A	2.25 A
	Starting Current	5.60 A	5.60 A	5.60 A	5.60 A	5.60 A
	Open Circuit Voltage	415V	415V	415V	415V	415V
	Drop Out Voltage	96V	166V	192V	222V	384V
	Power Factor (>=)%	90	90	90	90	90
	Min. Starting Temp (°F/°C)	-22 / -30	-22 / -30	-22 / -30	-22 / -30	-22 / -30
	Fuse Rating	18	10	9	7	5
	UL Bench Top Rise	D or A	D or A	D or A	D or A	D or A

Safety and performance cUL Listed UL Listed

See page E-1 for warranty information.

86655 – GEM1000MLTAA5-5/2

Metal Halide

1 – 1000W MH M47 Quad (120/208/240/277V)

- Magnetic ballast construction ideal for a wide variety of lighting applications
- Precision-wound coils, ensuring even heat dissipation and the highest electrical integrity
- Distributor replacement kit contains the appropriate core and coil with color coded leads, a properly rated capacitor and ignitor (if required) and all other components required for ballast replacement
- Quad ballast (120, 208, 240, 277)

General characteristics

Ballast Type	Magnetic – Core and Coil
ANSI Lamp Codes	M47
Voltage	120/208/240/277
Line Voltage Regulation (+/-)	10%
Circuit Type	CWA
Insulation Class	Class H, 180°C or Class N, 200°C
Type of Capacitor	Oil filled
Capacitance	24 Mfd GECAP-24/480V-O
Voltage (MIN)	540
Capacitor Temperature Rating	105°C (221°F)
GE Igniter	
Sound Rating	
Additional Info	

Electrical characteristics

Supply Current Frequency	60 Hz

Order information

Type	No. Items Per Sales Unit	No. Items Per Standard Package
Distributor Kit	1	2

Dimensions

Wiring diagram HID W-(C) – see example on page 18-68	
Case dimensions – Ref Drawing PC3 – see page 18-71	
Length (L)	7.75 in (197 mm)
Width (W)	2.75 in (70 mm)
Mounting dimensions	
Mount Length (M)	6.1 in (155 mm)
Mount Width (X or F)	
Mount Slots (MS)	0.25 in (6 mm)
A	3.10
B	5.30
Weight	20.30 lbs
Exit Type	Side
Nominal Length	3.7 in (95 mm)
Frame Size (H x L)	4.25 in x 6.00 in

Specifications by lamp and line voltage

Lamp	Specifications by line voltage				
M47		**120**	**208**	**240**	**277**
1000W Quartz Metal Halide	System Wattage (W)	1,050	1,050	1,050	1,050
	Nominal Current	8.80 A	5.10 A	4.40 A	3.80 A
	Ballast Factor	1	1	1	1
	Ballast Efficiency Factor	0.91	0.91	0.91	0.91
	Max Input Current	8.80 A	5.10 A	4.40 A	3.80 A
	Starting Current	5.60 A	5.60 A	5.60 A	5.60 A
	Open Circuit Voltage	415V	415V	415V	415V
	Drop Out Voltage	830V	830V	830V	830V
	Power Factor (>=)%	90	90	90	90
	Min. Starting Temp (°F/°C)	-22 / -30	-22 / -30	-22 / -30	-22 / -30
	Fuse Rating	18	10	9	7
	UL Bench Top Rise	D or A	D or A	D or A	D or A

Safety and performance cUL Listed UL Listed

78524 – GEM1000TRIAC5-5

Metal Halide

1 – 1000W M47 Tri Tap (120/277/347V)

- Magnetic ballast construction ideal for a wide variety of lighting applications
- Precision-wound coils, ensuring even heat dissipation and the highest electrical integrity
- Distributor replacement kit contains the appropriate core and coil with color coded leads, a properly rated capacitor and ignitor (if required) and all other components required for ballast replacement
- Tri Tap ballast (120/277/347)

General characteristics

Ballast Type	Magnetic – Core and Coil
ANSI Lamp Codes	M47
Voltage	120/277/347
Line Voltage Regulation (+/-)	10%
Circuit Type	CWA
Insulation Class	Class N, 200C
Type of Capacitor	Oil filled
Capacitance	24 Mfd GECAP-24/480V-O
Voltage (MIN)	540
Capacitor Temperature Rating	105°C (221°F)
GE Igniter	
Sound Rating	
Additional Info	

Electrical characteristics

Supply Current Frequency	50 Hz/60 Hz

Order information

Type	No. Items Per Sales Unit	No. Items Per Standard Package
Distributor Kit	1	2

Dimensions

Wiring diagram HID W-(M) – see example on page 18-69	
Case dimensions – Ref Drawing PC3 – see page 18-71	
Length (L)	5.25 in (133 mm)
Width (W)	1.25 in (32 mm)
Mounting dimensions	
Mount Length (M)	
Mount Width (X or F)	
Mount Slots (MS)	
A	2.96 in (75 mm)
B	4.92 in (125 mm)
Weight	24.1 lbs
Exit Type	Side
Nominal Length	5.37 in (136 mm)
Frame Size (H x L)	4.25 in (108 mm) x 6.00 in (152 mm)

Specifications by lamp and line voltage

Lamp	Specifications by line voltage			
M47		**120**	**277**	**347**
1000W MH	System Wattage (W)	1080	1080	1080
	Nominal Current	9.5 A	4.0 A	3.3 A
	Ballast Factor	1	1	1
	Ballast Efficiency Factor	0.92	0.92	0.92
	Max Input Current	10.5 A	4.4 A	3.6 A
	Starting Current	5.70 A	5.70 A	5.70 A
	Open Circuit Voltage	305V	305V	305V
	Drop Out Voltage	72V	166V	208V
	Power Factor (>=)%	90	90	90
	Min. Starting Temp (°F/°C)	-20 / -29	-20 / -29	-20 / -29
	Fuse Rating	28	12	10
	UL Bench Top Rise	E	E	E

Safety and performance cUL Listed UL Listed

See page E-1 for warranty information.

Metal Halide

HID Electronic and Electromagnetic Ballasts For 250 – 1500W Metal Halide HID Lamps

86693 – GEM150048TAC5M5-5

Metal Halide

1 – 1500W MH M48 480

- Magnetic ballast construction ideal for a wide variety of lighting applications
- Precision-wound coils, ensuring even heat dissipation and the highest electrical integrity
- Distributor replacement kit contains the appropriate core and coil with color coded leads, a properly rated capacitor and ignitor (if required) and all other components required for ballast replacement

General characteristics

Ballast Type	Magnetic – Core and Coil
ANSI Lamp Codes	M48
Voltage	480
Line Voltage Regulation (+/-)	10%
Circuit Type	CWA
Insulation Class	180C
Type of Capacitor	Oil filled
Capacitance	32 Mfd GECAP-32/525V-O
Voltage (MIN)	525
Capacitor Temperature Rating	100°C (212°F)
GE Igniter	
Sound Rating	
Additional Info	

Electrical characteristics

Supply Current Frequency	60 Hz

Order information

Type	No. Items Per Sales Unit	No. Items Per Standard Package
Distributor Kit	1	2

Specifications by lamp and line voltage

Lamp	Specifications by line voltage	
M48		**480**
1500W Quartz Metal Halide	System Wattage (W)	1,581
	Nominal Current	3.10 A
	Ballast Factor	1
	Ballast Efficiency Factor	0.95
	Max Input Current	3.10 A
	Starting Current	3.18 A
	Open Circuit Voltage	449V
	Drop Out Voltage	384V
	Power Factor (>=)%	90
	Min. Starting Temp (°F/°C)	-22 / -30
	Fuse Rating	10
	UL Bench Top Rise	G

Dimensions

Wiring diagram HID W-(J) – see example on page 18-68	
Case dimensions – Ref Drawing PC3 – see page 18-71	
Length (L)	7.75 in (197 mm)
Width (W)	2.75 in (70 mm)
Mounting dimensions	
Mount Length (M)	6.1 in (155 mm)
Mount Width (X or F)	
Mount Slots (MS)	0.25 in (6 mm)
A	4.0
B	6.0
Weight	30.00 lbs
Exit Type	Side
Nominal Length	5.2 in (133 mm)
Frame Size (H x L)	4.25 in x 6.00 in

Safety and performance

cUL Listed UL Listed

86698 – GEM1500MLTAC5-5

Metal Halide

1 – 1500W MH M48 Quad (120/208/240/277V)

- Magnetic ballast construction ideal for a wide variety of lighting applications
- Precision-wound coils, ensuring even heat dissipation and the highest electrical integrity
- Distributor replacement kit contains the appropriate core and coil with color coded leads, a properly rated capacitor and ignitor (if required) and all other components required for ballast replacement
- Quad ballast (120, 208, 240, 277)

General characteristics

Ballast Type	Magnetic – Core and Coil
ANSI Lamp Codes	M48
Voltage	240/277
Line Voltage Regulation (+/-)	10%
Circuit Type	CWA
Insulation Class	180C
Type of Capacitor	Oil filled
Capacitance	32 Mfd GECAP-32/525V-O
Voltage (MIN)	525
Capacitor Temperature Rating	100°C (212°F)
GE Igniter	
Sound Rating	
Additional Info	

Electrical characteristics

Supply Current Frequency	60 Hz

Order information

Type	No. Items Per Sales Unit	No. Items Per Standard Package
Distributor Kit	1	2

Specifications by lamp and line voltage

Lamp	Specifications by line voltage				
M48		**120**	**208**	**240**	**277**
1500W Quartz Metal Halide	System Wattage (W)	1,602	1,602	1,602	1,602
	Nominal Current	13.70 A	7.70 A	6.80 A	6.00 A
	Ballast Factor	1	1	1	1
	Ballast Efficiency Factor	0.94	0.94	0.94	0.94
	Max Input Current	13.70 A	7.70 A	6.80 A	6.00 A
	Starting Current	12.95 A	7.46 A	6.52 A	5.75 A
	Open Circuit Voltage	440V	440V	440V	440V
	Drop Out Voltage	96V	166V	192V	222V
	Power Factor (>=)%	90	90		90
	Min. Starting Temp (°F/°C)	-22 / -30	-22 / -30	-22 / -30	-22 / -30
	Fuse Rating	40	25	20	20
	UL Bench Top Rise	E	A	A	A

Dimensions

Wiring diagram HID W-(C) – see example on page 18-68	
Case dimensions – Ref Drawing PC3 – see page 18-71	
Length (L)	7.75 in (197 mm)
Width (W)	2.75 in (70 mm)
Mounting dimensions	
Mount Length (M)	6.1 in (155 mm)
Mount Width (X or F)	
Mount Slots (MS)	0.25 in (6 mm)
A	4.0
B	6.0
Weight	30.00 lbs
Exit Type	Side
Nominal Length	5.2 in (133 mm)
Frame Size (H x L)	4.25 in x 6.00 in

Safety and performance

cUL Listed UL Listed

See page E-1 for warranty information.

67335 – GEP175MLTACA3-5/2

Pulse Start

1 – 175W PS M137 or M152 Quad (120/208/240/277V)

- Magnetic ballast construction ideal for a wide variety of lighting applications
- Precision-wound coils, ensuring even heat dissipation and the highest electrical integrity
- Distributor replacement kit contains the appropriate core and coil with color coded leads, a properly rated capacitor and ignitor (if required) and all other components required for ballast replacement
- Quad ballast (120, 208, 240, 277)

General characteristics

Ballast Type	Magnetic – Core and Coil
ANSI Lamp Codes	M152, M137
Voltage	120/208/240/277
Line Voltage Regulation (+/-)	10%
Circuit Type	Pulse Start CWA
Insulation Class	Class H, 180°C or Class N, 200°C
Type of Capacitor	Oil filled
Capacitance	10 Mfd GECAP-10/450V-O
Voltage (MIN)	450
Capacitor Temperature Rating	105°C (221°F)
GE Igniter	MH350-1A
Sound Rating	
Additional Info	

Electrical characteristics

Supply Current Frequency	60 Hz

Order information

Type	No. Items Per Sales Unit	No. Items Per Standard Package
Distributor Kit	1	6

Dimensions

Wiring diagram HID W-(A) – see example on page 18-68	
Case dimensions – Ref Drawing PC1 – see page 18-71	
Length (L)	5.25 in (133 mm)
Width (W)	1.25 in (32 mm)
Mounting dimensions	
Mount Length (M)	4.6 in (117 mm)
Mount Width (X or F)	
Mount Slots (MS)	0.25 in (6 mm)
A	2.60
B	3.90
Weight	7.20 lbs
Exit Type	Side
Nominal Length	3.2 in (83 mm)
Frame Size (H x L)	2.813 in x 3.939 in

Specifications by lamp and line voltage

Lamp	Specifications by line voltage	120	208	240	277
M153 250W Quartz Metal Halide **M137** 175W Quartz Metal Halide	System Wattage (W)	215	215	215	215
	Nominal Current	1.88 A	1.08 A	0.94 A	0.82 A
	Ballast Factor	1	1	1	1
	Ballast Efficiency Factor	.08	.08	.08	.08
	Max Input Current	1.88 A	1.08 A	0.94 A	0.82 A
	Starting Current	1.70 A	1.70 A	1.70 A	1.70 A
	Open Circuit Voltage	305V	305V	305V	305V
	Drop Out Voltage	580V	580V	580V	580V
	Power Factor (>=) %	90	90	90	90
	Min. Starting Temp	-20 / -30	-20 / -30	-20 / -30	-20 / -30
	Fuse Rating	3	2	2	1
	UL Bench Top Rise	D or A	D or A	D or A	D or A

Safety and performance cUL Listed UL Listed

78525 – GEP175TRIAC3-5

Pulse Start

1 – 175W PS M137 Tri Tap (120/277/347V)

- Magnetic ballast construction ideal for a wide variety of lighting applications
- Precision-wound coils, ensuring even heat dissipation and the highest electrical integrity
- Distributor replacement kit contains the appropriate core and coil with color coded leads, a properly rated capacitor and ignitor (if required) and all other components required for ballast replacement
- Tri Tap ballast (120/277/347)

General characteristics

Ballast Type	Magnetic – Core and Coil
ANSI Lamp Codes	M137
Voltage	120/277/347
Line Voltage Regulation (+/-)	10%
Circuit Type	Pulse Start CWA
Insulation Class	Class N, 200C
Type of Capacitor	Oil filled
Capacitance	12 Mfd
Voltage (MIN)	450
Capacitor Temperature Rating	105°C (221°F)
GE Igniter	
Sound Rating	
Additional Info	

Electrical characteristics

Supply Current Frequency	50 Hz/60 Hz

Order information

Type	No. Items Per Sales Unit	No. Items Per Standard Package
Distributor Kit	1	6

Dimensions

Wiring diagram HID W-(L) – see example on page 18-69	
Case dimensions – Ref Drawing PC1 – see page 18-71	
Length (L)	5.25 in (133 mm)
Width (W)	1.25 in (32 mm)
Mounting dimensions	
Mount Length (M)	
Mount Width (X or F)	
Mount Slots (MS)	
A	2.17 in (55 mm)
B	3.62 in (92 mm)
Weight	6.98 lbs
Exit Type	Side
Nominal Length	3.54 in (90 mm)
Frame Size (H x L)	2.82 in (72 mm) x 3.94 in (101 mm)

Specifications by lamp and line voltage

Lamp	Specifications by line voltage	120	277	347
M137 200W PS	System Wattage (W)	215	215	215
	Nominal Current	1.95 A	0.85 A	0.68 A
	Ballast Factor	1	1	1
	Ballast Efficiency Factor	0.86	0.86	0.86
	Max Input Current	2.15 A	.94 A	.75 A
	Starting Current	1.85 A	1.85 A	1.85 A
	Open Circuit Voltage	270V	270V	270V
	Drop Out Voltage	78V	180V	226V
	Power Factor (>=) %	90	90	90
	Min. Starting Temp	-40 / -40	-40 / -40	-40 / -40
	Fuse Rating	6	3	2
	UL Bench Top Rise	A	A	A

Safety and performance cUL Listed UL Listed

See page E-1 for warranty information.

Pulse Start

HID Electronic and Electromagnetic For 175 – 1000W Pulse Start Metal Halide HID Lamps

67334 – GEP17548TAA3-5/2

Pulse Start

1 – 175W PS M137 or M152 480

- Magnetic ballast construction ideal for a wide variety of lighting applications
- Precision-wound coils, ensuring even heat dissipation and the highest electrical integrity
- Distributor replacement kit contains the appropriate core and coil with color coded leads, a properly rated capacitor and ignitor (if required) and all other components required for ballast replacement

General characteristics

Ballast Type	Magnetic – Core and Coil
ANSI Lamp Codes	M152, M137
Voltage	480
Line Voltage Regulation (+/-)	10%
Circuit Type	Pulse Start CWA
Insulation Class	Class H, 180°C or Class N, 200°C
Type of Capacitor	Oil filled
Capacitance	10 Mfd GECAP-10/400V-O
Voltage (MIN)	450
Capacitor Temperature Rating	105°C (221°F)
GE Igniter	MH350-1A
Sound Rating	
Additional Info	

Electrical characteristics

Supply Current Frequency	60 Hz

Order information

Type	No. Items Per Sales Unit	No. Items Per Standard Package
Distributor Kit	1	6

Specifications by lamp and line voltage

Lamp	Specifications by line voltage	
M152, M137		**480**
175W Quartz	System Wattage (W)	215
Metal Halide	Nominal Current	0.47 A
	Ballast Factor	1
	Ballast Efficiency Factor	0.81
	Max Input Current	0.47 A
	Starting Current	1.70 A
	Open Circuit Voltage	300V
	Drop Out Voltage	580V
	Power Factor (>=)%	90
	Min. Starting Temp (°F/°C)	-20 / -30
	Fuse Rating	1
	UL Bench Top Rise	C or A

Dimensions

Wiring diagram HID W-(E) – see example on page 18-68	
Case dimensions – Ref Drawing PC1 – see page 18-71	
Length (L)	5.25 in (133 mm)
Width (W)	1.25 in (32 mm)
Mounting dimensions	
Mount Length (M)	4.6 in (117 mm)
Mount Width (X or F)	
Mount Slots (MS)	0.25 in (6 mm)
A	2.6
B	3.9
Weight	7.20 lbs
Exit Type	Side
Nominal Length	3.2 in (83 mm)
Frame Size (H x L)	2.813 in x 3.939 in

Safety and performance

cUL Listed UL Listed

78526 – GEP200TRIAC3-5

Pulse Start

1 – 200W PS M136 Tri Tap (120/277/347V)

- Magnetic ballast construction ideal for a wide variety of lighting applications
- Precision-wound coils, ensuring even heat dissipation and the highest electrical integrity
- Distributor replacement kit contains the appropriate core and coil with color coded leads, a properly rated capacitor and ignitor (if required) and all other components required for ballast replacement

General characteristics

Ballast Type	Magnetic – Core and Coil
ANSI Lamp Codes	M136
Voltage	120/277/347
Line Voltage Regulation (+/-)	10%
Circuit Type	Pulse Start CWA
Insulation Class	Class N, 200C
Type of Capacitor	Oil filled
Capacitance	16 Mfd
Voltage (MIN)	450
Capacitor Temperature Rating	105°C (221°F)
GE Igniter	MH350-1A
Sound Rating	
Additional Info	

Electrical characteristics

Supply Current Frequency	60 Hz

Order information

Type	No. Items Per Sales Unit	No. Items Per Standard Package
Distributor Kit	1	6

Specifications by lamp and line voltage

Lamp	Specifications by line voltage			
M136		**120**	**277**	**347**
200W	System Wattage (W)	240	240	240
PS	Nominal Current	2.2 A	0.95 A	0.76 A
	Ballast Factor	1	1	1
	Ballast Efficiency Factor	0.81	0.81	0.81
	Max Input Current	2.20 A	0.95 A	0.76 A
	Starting Current	1.95 A	1.95 A	1.95 A
	Open Circuit Voltage	250V	250V	250V
	Drop Out Voltage	90V	208V	260V
	Power Factor (>=)%	90	90	90
	Min. Starting Temp (°F/°C)	-40 / -40	-40 / -40	-40 / -40
	Fuse Rating	7	3	2
	UL Bench Top Rise	D	B	A

Dimensions

Wiring diagram HID W-(L) – see example on page 18-69	
Case dimensions – Ref Drawing PC1 – see page 18-71	
Length (L)	5.25 in (133 mm)
Width (W)	1.25 in (32 mm)
Mounting dimensions	
Mount Length (M)	
Mount Width (X or F)	
Mount Slots (MS)	
A	2.48 in (63 mm)
B	3.94 in (100 mm)
Weight	7.77 lbs
Exit Type	Side
Nominal Length	3.54 in (90 mm)
Frame Size (H x L)	2.82 in (72 mm) x 3.94 in (101 mm)

Safety and performance

cUL Listed UL Listed

See page E-1 for warranty information.

67344 – GEP250MLTAA4-5/2

Pulse Start

1 – 250W PS M138 or M153 Quad (120/208/240/277V)

- Magnetic ballast construction ideal for a wide variety of lighting applications
- Precision-wound coils, ensuring even heat dissipation and the highest electrical integrity
- Distributor replacement kit contains the appropriate core and coil with color coded leads, a properly rated capacitor and ignitor (if required) and all other components required for ballast replacement
- Quad ballast (120, 208, 240, 277)

General characteristics

Ballast Type	Magnetic – Core and Coil
ANSI Lamp Codes	M153, M138
Voltage	120/208/240/277
Line Voltage Regulation (+/-)	10%
Circuit Type	Pulse Start CWA
Insulation Class	Class H, 180°C or Class N, 200°C
Type of Capacitor	Oil filled
Capacitance	15 Mfd GECAP-15/400V-O
Voltage (MIN)	370
Capacitor Temperature Rating	105°C (221°F)
GE Igniter	MH350-1A
Sound Rating	
Additional Info	

Electrical characteristics

Supply Current Frequency	60 Hz

Order information

Type	No. Items Per Sales Unit	No. Items Per Standard Package
Distributor Kit	1	3

Specifications by lamp and line voltage

Lamp	Specifications by line voltage				
M153, M138		**120**	**208**	**240**	**277**
250W Quartz	System Wattage (W)	294	294	294	294
Metal Halide	Nominal Current	2.45 A	1.41 A	1.23 A	1.06 A
	Ballast Factor	1	1	1	1
	Ballast Efficiency Factor	0.85	0.85	0.85	0.85
	Max Input Current	2.45 A	1.41 A	1.23 A	1.06 A
	Starting Current	2.45 A	2.45 A	2.45 A	2.45 A
	Open Circuit Voltage	275V	275V	275V	275V
	Drop Out Voltage	550V	550V	550V	550V
	Power Factor (>=)%	90	90	90	90
	Min. Starting Temp (°F/°C)	-20 / -30	-20 / -30	-20 / -30	-20 / -30
	Fuse Rating	5	3	2	2
	UL Bench Top Rise	A or B	A or B	A or B	A or B

Dimensions

Wiring diagram HID W-(A) – see example on page 18-68	
Case dimensions – Ref Drawing PC2 – see page 18-71	
Length (L)	5.25 in (133 mm)
Width (W)	1.25 in (32 mm)
Mounting dimensions	
Mount Length (M)	4.6 in (117 mm)
Mount Width (X or F)	
Mount Slots (MS)	0.25 in (6 mm)
A	1.77
B	3.50
Weight	9.00 lbs
Exit Type	Side
Nominal Length	3.2 in (83 mm)
Frame Size (H x L)	4.25 in x 4.75 in

Safety and performance

cUL Listed UL Listed

78527 – GEP250TRIAC4-5

Pulse Start

1 – 250W PS M138 Tri Tap (120/277/347V)

- Magnetic ballast construction ideal for a wide variety of lighting applications
- Precision-wound coils, ensuring even heat dissipation and the highest electrical integrity
- Distributor replacement kit contains the appropriate core and coil with color coded leads, a properly rated capacitor and ignitor (if required) and all other components required for ballast replacement
- Tri Tap ballast (120/277/347)

General characteristics

Ballast Type	Magnetic – Core and Coil
ANSI Lamp Codes	M138
Voltage	120/277/347
Line Voltage Regulation (+/-)	10%
Circuit Type	Pulse Start CWA
Insulation Class	Class N, 200C
Type of Capacitor	Oil filled
Capacitance	15 Mfd GECAP-15/400V-O
Voltage (MIN)	450
Capacitor Temperature Rating	105°C (221°F)
GE Igniter	MH350-1A
Sound Rating	
Additional Info	

Electrical characteristics

Supply Current Frequency	50 Hz/60 Hz

Order information

Type	No. Items Per Sales Unit	No. Items Per Standard Package
Distributor Kit	1	3

Specifications by lamp and line voltage

Lamp	Specifications by line voltage			
M138		**120**	**277**	**347**
250W	System Wattage (W)	290	290	290
PS	Nominal Current	2.5 A	1.1 A	0.86 A
	Ballast Factor	1	1	1
	Ballast Efficiency Factor	0.85	0.85	0.85
	Max Input Current	2.75 A	1.21A	.95 A
	Starting Current	2.20 A	0.95 A	0.80 A
	Open Circuit Voltage	270V	270V	270V
	Drop Out Voltage	78V	180V	226V
	Power Factor (>=)%	90	90	90
	Min. Starting Temp (°F/°C)	-40 / -40	-40 / -40	-40 / -40
	Fuse Rating	8	3	3
	UL Bench Top Rise	A	A	A

Dimensions

Wiring diagram HID W-(L) – see example on page 18-69	
Case dimensions – Ref Drawing PC2 – see page 18-71	
Length (L)	5.25 in (133 mm)
Width (W)	1.25 in (32 mm)
Mounting dimensions	
Mount Length (M)	
Mount Width (X or F)	
Mount Slots (MS)	
A	1.5 in (38 mm)
B	3.23 in (82 mm)
Weight	9.4 lbs
Exit Type	Side
Nominal Length	4.37 in (111 mm)
Frame Size (H x L)	4.25 in (108 mm) x 4.75 in (121 mm)

Safety and performance

cUL Listed UL Listed

See page E-1 for warranty information.

Pulse Start

HID Electronic and Electromagnetic For 175 – 1000W Pulse Start Metal Halide HID Lamps

67336 – GEP25048TAA4-5/2

Pulse Start

1 – 250W PS M138 or M153 480

- Magnetic ballast construction ideal for a wide variety of lighting applications
- Precision-wound coils, ensuring even heat dissipation and the highest electrical integrity
- Distributor replacement kit contains the appropriate core and coil with color coded leads, a properly rated capacitor and ignitor (if required) and all other components required for ballast replacement

General characteristics

Ballast Type	Magnetic – Core and Coil
ANSI Lamp Codes	M153, M138
Voltage	480
Line Voltage Regulation (+/-)	10%
Circuit Type	Pulse Start CWA
Insulation Class	Class H, 180°C or Class N, 200°C
Type of Capacitor	Oil filled
Capacitance	15 Mfd GECAP-15/400V-O
Voltage (MIN)	370
Capacitor Temperature Rating	105°C (221°F)
GE Igniter	MH350-1A
Sound Rating	
Additional Info	

Electrical characteristics

Supply Current Frequency	60 Hz

Order information

Type	No. Items Per Sales Unit	No. Items Per Standard Package
Distributor Kit	1	3

Specifications by lamp and line voltage

Lamp	Specifications by line voltage	
M153		**480**
250W Quartz	System Wattage (W)	294
Metal Halide	Nominal Current	0.62 A
M138	Ballast Factor	1
	Ballast Efficiency Factor	0.84
	Max Input Current	0.62 A
	Starting Current	2.45 A
	Open Circuit Voltage	275V
	Drop Out Voltage	550V
	Power Factor (>=)%	90
	Min. Starting Temp (°F/°C)	-20 / -30
	Fuse Rating	1
	UL Bench Top Rise	A or C

Dimensions

Wiring diagram HID W-(E) – see example on page 18-68	
Case dimensions – Ref Drawing PC2 – see page 18-71	
Length (L)	5.25 in (133 mm)
Width (W)	1.25 in (32 mm)
Mounting dimensions	
Mount Length (M)	4.6 in (117 mm)
Mount Width (X or F)	
Mount Slots (MS)	0.25 in (6 mm)
A	1.79
B	3.50
Weight	9.00 lbs
Exit Type	Side
Nominal Length	3.2 in (83 mm)
Frame Size (H x L)	4.25 in x 4.75 in

Safety and performance

cUL Listed UL Listed

67345 – GEP320MLTAA4-5/2

Pulse Start

1 – 320W PS M132 or 154 Quad (120/208/240/277V)

- Magnetic ballast construction ideal for a wide variety of lighting applications
- Precision-wound coils, ensuring even heat dissipation and the highest electrical integrity
- Distributor replacement kit contains the appropriate core and coil with color coded leads, a properly rated capacitor and ignitor (if required) and all other components required for ballast replacement
- Quad ballast (120, 208, 240, 277)

General characteristics

Ballast Type	Magnetic – Core and Coil
ANSI Lamp Codes	M154, M132
Voltage	120/208/240/277
Line Voltage Regulation (+/-)	10%
Circuit Type	CWA
Insulation Class	Class H, 180°C or Class N, 200°C
Type of Capacitor	Oil filled
Capacitance	21 Mfd GECAP-21/345V-O
Voltage (MIN)	370
Capacitor Temperature Rating	105°C (221°F)
GE Igniter	MH350-1A
Sound Rating	
Additional Info	

Electrical characteristics

Supply Current Frequency	60 Hz

Order information

Type	No. Items Per Sales Unit	No. Items Per Standard Package
Distributor Kit	1	3

Specifications by lamp and line voltage

Lamp	Specifications by line voltage				
M154, M132		**120**	**208**	**240**	**277**
	System Wattage (W)	370	370	370	370
	Nominal Current	3.10 A	1.80 A	1.55 A	1.34 A
	Ballast Factor	1	1	1	1
	Ballast Efficiency Factor	0.86	0.86	0.86	0.86
	Max Input Current	3.10 A	1.80 A	1.55 A	1.34 A
	Starting Current	3.20 A	3.20 A	3.20 A	3.20 A
	Open Circuit Voltage	270V	270V	270V	270V
	Drop Out Voltage	540V	540V	540V	540V
	Power Factor (>=)%	90	90	90	90
	Min. Starting Temp (°F/°C)	-20 / -30	-20 / -30	-20 / -30	-20 / -30
	Fuse Rating	7	4	3	3
	UL Bench Top Rise	A or B	A or C	A or C	A or C

Dimensions

Wiring diagram HID W-(A) – see example on page 18-68	
Case dimensions – Ref Drawing PC2 – see page 18-71	
Length (L)	5.25 in (133 mm)
Width (W)	1.25 in (32 mm)
Mounting dimensions	
Mount Length (M)	4.6 in (117 mm)
Mount Slots (MS) Mount Width (X or F)	0.25 in (6 mm)
A	1.89
B	3.60
Weight	9.50 lbs
Exit Type	Side
Nominal Length	3.7 in (95 mm)
Frame Size (H x L)	4.25 in x 4.75 in

Safety and performance

cUL Listed UL Listed

See page E-1 for warranty information.

78528 – GEP320TRIAC4-5

Pulse Start

1 – 320W PS M132 Tri Tap (120/277/347V)

- Magnetic ballast construction ideal for a wide variety of lighting applications
- Precision-wound coils, ensuring even heat dissipation and the highest electrical integrity
- Distributor replacement kit contains the appropriate core and coil with color coded leads, a properly rated capacitor and ignitor (if required) and all other components required for ballast replacement
- Tri Tap ballast (120/277/347)

General characteristics

Ballast Type	Magnetic – Core and Coil
ANSI Lamp Codes	M132
Voltage	120/277/347
Line Voltage Regulation (+/-)	10%
Circuit Type	Pulse Start CWA
Insulation Class	Class N, 200C
Type of Capacitor	Oil filled
Capacitance	21 Mfd GECAP-21/345V-O
Voltage (MIN)	450
Capacitor Temperature Rating	105°C (221°F)
GE Igniter	MH350-1A
Sound Rating	
Additional Info	

Dimensions

Wiring diagram HID W-(L) – see example on page 18-69	
Case dimensions – Ref Drawing PC2 – see page 18-71	
Length (L)	5.25 in (133 mm)
Width (W)	1.25 in (32 mm)
Mounting dimensions	
Mount Length (M)	
Mount Slots (MS) Mount Width (X or F)	
A	1.77 in (45 mm)
B	3.50 in (89 mm)
Weight	11.02 lbs
Exit Type	Side
Nominal Length	4.37 in (111 mm)
Frame Size (H x L)	4.25 in (108 mm) x 4.75 in (121 mm)

Electrical characteristics

Supply Current Frequency	60 Hz

Order information

Type	No. Items Per Sales Unit	No. Items Per Standard Package
Distributor Kit	1	6

Specifications by lamp and line voltage

Lamp	Specifications by line voltage			
M132		**120**	**277**	**347**
320W	System Wattage (W)	375	375	375
PS	Nominal Current	3.2 A	1.40 A	1.10 A
	Ballast Factor	1	1	1
	Ballast Efficiency Factor	0.86	0.86	0.86
	Max Input Current	3.52 A	1.54 A	1.21 A
	Starting Current	3.40 A	3.40 A	3.40 A
	Open Circuit Voltage	270V	270V	270V
	Drop Out Voltage	78V	180V	226V
	Power Factor (>=)%	90	90	90
	Min. Starting Temp (°F/°C)	-40 / -40	-40 / -40	-40 / -40
	Fuse Rating	10	5	3
	UL Bench Top Rise	A	A	A

Safety and performance cUL Listed UL Listed

67342 – GEP32048TAC4-5/2

Pulse Start

1 – 320W PS M132 or M154 480

- Magnetic ballast construction ideal for a wide variety of lighting applications
- Precision-wound coils, ensuring even heat dissipation and the highest electrical integrity
- Distributor replacement kit contains the appropriate core and coil with color coded leads, a properly rated capacitor and ignitor (if required) and all other components required for ballast replacement

General characteristics

Ballast Type	Magnetic – Core and Coil
ANSI Lamp Codes	M154, M132
Voltage	480
Line Voltage Regulation (+/-)	10%
Circuit Type	Pulse Start CWA
Insulation Class	Class H, 180°C or Class N, 200°C
Type of Capacitor	Oil filled
Capacitance	21 Mfd GECAP-21/345V-O
Voltage (MIN)	370
Capacitor Temperature Rating	105°C (221°F)
GE Igniter	MH350-1A
Sound Rating	
Additional Info	

Dimensions

Wiring diagram HID W-(D) – see example on page 18-68	
Case dimensions – Ref Drawing PC2 – see page 18-71	
Length (L)	5.25 in (133 mm)
Width (W)	1.25 in (32 mm)
Height (H)	
Mounting dimensions	
Mount Length (M)	4.6 in (117 mm)
Mount Width (X or F)	
Mount Slots (MS)	0.25 in (6 mm)
A	2.17
B	3.90
Weight	10.90 lbs
Exit Type	Side
Nominal Length	3.7 in (95 mm)
Frame Size (H x L)	4.25 in x 4.75 in

Electrical characteristics

Supply Current Frequency	60 Hz

Order information

Type	No. Items Per Sales Unit	No. Items Per Standard Package
Distributor Kit	1	3

Specifications by lamp and line voltage

Lamp	Specifications by line voltage	
M154, M132		**480**
	System Wattage (W)	374
	Nominal Current	0.78 A
	Ballast Factor	1
	Ballast Efficiency Factor	0.85
	Max Input Current	0.78 A
	Starting Current	3.30 A
	Open Circuit Voltage	265V
	Drop Out Voltage	530V
	Power Factor (>=)%	90
	Min. Starting Temp (°F/°C)	-20 / -30
	Fuse Rating	2
	UL Bench Top Rise	A or C

Safety and performance cUL Listed UL Listed

See page E-1 for warranty information.

Pulse Start

HID Electronic and Electromagnetic For 175 – 1000W Pulse Start Metal Halide HID Lamps

67346 – GEP350MLTAA4-5/2

Pulse Start

1 – 350W PS M131 Quad (120/208/240/277V)

- Magnetic ballast construction ideal for a wide variety of lighting applications
- Precision-wound coils, ensuring even heat dissipation and the highest electrical integrity
- Distributor replacement kit contains the appropriate core and coil with color coded leads, a properly rated capacitor and ignitor (if required) and all other components required for ballast replacement
- Quad ballast (120, 208, 240, 277)

General characteristics

Ballast Type	Magnetic – Core and Coil
ANSI Lamp Codes	M131
Voltage	120/208/240/277
Line Voltage Regulation (+/-)	10%
Circuit Type	Pulse Start CWA
Insulation Class	Class H, 180°C or Class N, 200°C
Type of Capacitor	Oil filled
Capacitance	22 Mfd GECAP-22/345V-O
Voltage (MIN)	370
Capacitor Temperature Rating	105°C (221°F)
GE Igniter	MH350-1A
Sound Rating	
Additional Info	

Electrical characteristics

Supply Current Frequency	60 Hz

Order information

Type	No. Items Per Sales Unit	No. Items Per Standard Package
Distributor Kit	1	3

Specifications by lamp and line voltage

Lamp	Specifications by line voltage				
M131		**120**	**208**	**240**	**277**
350W Quartz Metal Halide	System Wattage (W)	404	404	404	404
	Nominal Current	3.30 A	1.90 A	1.65 A	1.45 A
	Ballast Factor	1	1	1	1
	Ballast Efficiency Factor	0.86	0.86	0.86	0.86
	Max Input Current	3.30 A	1.90 A	1.65 A	1.45 A
	Starting Current	3.40 A	3.40 A	3.40 A	3.40 A
	Open Circuit Voltage	265V	265V	265V	265V
	Drop Out Voltage	530V	530V	530V	530V
	Power Factor (>=)%	90	90	90	90
	Min. Starting Temp (°F/°C)	-20 / -30	-20 / -30	-20 / -30	-20 / -30
	Fuse Rating	7	4	3	3
	UL Bench Top Rise	A or D	A or D	A or D	A or D

Dimensions

Wiring diagram HID W-(A) – see example on page 18-68	
Case dimensions – Ref Drawing PC2 – see page 18-71	
Length (L)	5.25 in (133 mm)
Width (W)	1.25 in (32 mm)
Mounting dimensions	
Mount Length (M)	4.6 in (117 mm)
Mount Width (X or F)	
Mount Slots (MS)	0.25 in (6 mm)
A	1.89
B	3.6
Weight	9.50 lbs
Exit Type	Side
Nominal Length	3.7 in (95 mm)
Frame Size (H x L)	4.25 in x 4.75 in

Safety and performance

cUL Listed UL Listed

78529 – GEP350TRIAC4-5

Pulse Start

1 – 350W PS M131 Tri Tap (120/277/347V)

- Magnetic ballast construction ideal for a wide variety of lighting applications
- Precision-wound coils, ensuring even heat dissipation and the highest electrical integrity
- Distributor replacement kit contains the appropriate core and coil with color coded leads, a properly rated capacitor and ignitor (if required) and all other components required for ballast replacement
- Tri Tap ballast (120/277/347)

General characteristics

Ballast Type	Magnetic – Core and Coil
ANSI Lamp Codes	M131
Voltage	120/277/347
Line Voltage Regulation (+/-)	10%
Circuit Type	Pulse Start CWA
Insulation Class	Class N, 200C
Type of Capacitor	Oil filled
Capacitance	22 Mfd
Voltage (MIN)	450
Capacitor Temperature Rating	105°C (221°F)
GE Igniter	MH350-1A
Sound Rating	
Additional Info	

Electrical characteristics

Supply Current Frequency	60 Hz

Order information

Type	No. Items Per Sales Unit	No. Items Per Standard Package
Distributor Kit	1	3

Specifications by lamp and line voltage

Lamp	Specifications by line voltage			
M131		**120**	**277**	**347**
350W PS	System Wattage (W)	410	410	410
	Nominal Current	3.40 A	1.48 A	1.18 A
	Ballast Factor	1	1	1
	Ballast Efficiency Factor	0.84	0.84	0.84
	Max Input Current	3.74 A	1.63 A	1.30 A
	Starting Current	3.60 A	3.60 A	3.60 A
	Open Circuit Voltage	270V	270V	270V
	Drop Out Voltage	78V	180V	226V
	Power Factor (>=)%	90	90	90
	Min. Starting Temp (°F/°C)	-40 / -40	-40 / -40	-40 / -40
	Fuse Rating	10	6	3
	UL Bench Top Rise	A	A	A

Dimensions

Wiring diagram HID W-(L) – see example on page 18-69	
Case dimensions – Ref Drawing PC2 – see page 18-71	
Length (L)	5.25 in (133 mm)
Width (W)	1.25 in (32 mm)
Mounting dimensions	
Mount Length (M)	
Mount Width (X or F)	
Mount Slots (MS)	
A	1.77 in (45 mm)
B	3.50 in (89 mm)
Weight	11.10 lbs
Exit Type	Side
Nominal Length	4.37 in (111 mm)
Frame Size (H x L)	4.25 in (108 mm) x 4.75 in (121 mm)

Safety and performance

cUL Listed UL Listed

See page E-1 for warranty information.

67341 – GEP40048TAA4-5/2

Pulse Start

1 – 400W PS M135 or M155 480

- Magnetic ballast construction ideal for a wide variety of lighting applications
- Precision-wound coils, ensuring even heat dissipation and the highest electrical integrity
- Distributor replacement kit contains the appropriate core and coil with color coded leads, a properly rated capacitor and ignitor (if required) and all other components required for ballast replacement

General characteristics

Ballast Type	Magnetic – Core and Coil
ANSI Lamp Codes	M155, M135
Voltage	480
Line Voltage Regulation (+/-)	10%
Circuit Type	Pulse Start CWA
Insulation Class	Class H, 180°C or Class N, 200°C
Type of Capacitor	Oil filled
Capacitance	26 Mfd GECAP-26/400V-O
Voltage (MIN)	370
Capacitor Temperature Rating	105°C (221°F)
GE Igniter	MH350-1A
Sound Rating	
Additional Info	

Electrical characteristics

Supply Current Frequency	60 Hz

Order information

Type	No. Items Per Sales Unit	No. Items Per Standard Package
Distributor Kit	1	3

Specifications by lamp and line voltage

Lamp	Specifications by line voltage	
M155, M135		**480**
400W Quartz Metal Halide	System Wattage (W)	465
	Nominal Current	1.00 A
	Ballast Factor	1
	Ballast Efficiency Factor	0.86
	Max Input Current	1.00 A
	Starting Current	4.00 A
	Open Circuit Voltage	265V
	Drop Out Voltage	530V
	Power Factor (>=)%	90
	Min. Starting Temp (°F/°C)	-20 / -30
	Fuse Rating	2
	UL Bench Top Rise	A or C

Dimensions

Wiring diagram HID W-(D) – see example on page 18-68	
Case dimensions – Ref Drawing PC2 – see page 18-71	
Length (L)	5.25 in (133 mm)
Width (W)	1.25 in (32 mm)
Mounting dimensions	
Mount Length (M)	4.6 in (117 mm)
Mount Width (X or F)	
Mount Slots (MS)	0.25 in (6 mm)
A	2.17
B	3.90
Weight	11.50 lbs
Exit Type	Side
Nominal Length	4.6 in (119 mm)
Frame Size (H x L)	4.25 in x 4.75 in

Safety and performance

cUL Listed UL Listed

67347 – GEP400MLTAA4-5/2

Pulse Start

1 – 400W PS M59 Quad (120/208/240/277V)

- Magnetic ballast construction ideal for a wide variety of lighting applications
- Precision-wound coils, ensuring even heat dissipation and the highest electrical integrity
- Distributor replacement kit contains the appropriate core and coil with color coded leads, a properly rated capacitor and ignitor (if required) and all other components required for ballast replacement
- Quad ballast (120, 208, 240, 277)

General characteristics

Ballast Type	Magnetic – Core and Coil
ANSI Lamp Codes	M59
Voltage	120/208/240/277
Line Voltage Regulation (+/-)	10%
Circuit Type	CWA
Insulation Class	Class H, 180°C or Class N, 200°C
Type of Capacitor	Oil filled
Capacitance	24 Mfd GECAP-24/400V-O
Voltage (MIN)	450
Capacitor Temperature Rating	105°C (221°F)
GE Igniter	MH350-1A
Sound Rating	
Additional Info	

Electrical characteristics

Supply Current Frequency	60 Hz

Order information

Type	No. Items Per Sales Unit	No. Items Per Standard Package
Distributor Kit	1	3

Specifications by lamp and line voltage

Lamp	Specifications by line voltage				
M59		**120**	**208**	**240**	**277**
	System Wattage (W)	457	457	457	457
	Nominal Current	4.00 A	2.30 A	2.00 A	1.75 A
	Ballast Factor	1	1	1	1
	Ballast Efficiency Factor	0.87	0.87	0.87	0.87
	Max Input Current	4.00 A	2.30 A	2.00 A	1.75 A
	Starting Current	3.80 A	3.80 A	3.80 A	3.80 A
	Open Circuit Voltage	300V	300V	300V	300V
	Drop Out Voltage	580V	580V	580V	580V
	Power Factor (>=)%	90	90	90	90
	Min. Starting Temp (°F/°C)	-20 / -30	-20 / -30	-20 / -30	-20 / -30
	Fuse Rating	8	5	4	3
	UL Bench Top Rise	A or D	A or D	A or D	A or D

Dimensions

Wiring diagram HID W-(C) – see example on page 18-68	
Case dimensions – Ref Drawing PC2 – see page 18-71	
Length (L)	5.25 in (133 mm)
Width (W)	1.25 in (32 mm)
Mounting dimensions	
Mount Length (M)	4.6 in (117 mm)
Mount Width (X or F)	
Mount Slots (MS)	0.25 in (6 mm)
A	2.17
B	3.90
Weight	10.80 lbs
Exit Type	Side
Nominal Length	4.6 in (119 mm)
Frame Size (H x L)	4.25 in x 4.75 in

Safety and performance

cUL Listed UL Listed

See page E-1 for warranty information.

Pulse Start

HID Electronic and Electromagnetic For 175 – 1000W Pulse Start Metal Halide HID Lamps

78530 – GEP400TRIAC4-5

Pulse Start

1 – 400W PS M135 Tri Tap (120/277/347V)

- Magnetic ballast construction ideal for a wide variety of lighting applications
- Precision-wound coils, ensuring even heat dissipation and the highest electrical integrity
- Distributor replacement kit contains the appropriate core and coil with color coded leads, a properly rated capacitor and ignitor (if required) and all other components required for ballast replacement
- Tri Tap ballast (120/277/347)

General characteristics

Ballast Type	Magnetic – Core and Coil
ANSI Lamp Codes	M135
Voltage	120/277/347
Line Voltage Regulation (+/-)	10%
Circuit Type	Pulse Start CWA
Insulation Class	Class N, 200C
Type of Capacitor	Oil filled
Capacitance	26 Mfd GECAP-26/525V-O
Voltage (MIN)	450
Capacitor Temperature Rating	105°C (221°F)
GE Igniter	MH350-1A
Sound Rating	
Additional Info	

Dimensions

Wiring diagram HID W-(L) – see example on page 18-69	
Case dimensions – Ref Drawing PC2 – see page 18-71	
Length (L)	5.25 in (133 mm)
Width (W)	1.25 in (32 mm)
Mounting dimensions	
Mount Length (M)	
Mount Width (X or F)	
Mount Slots (MS)	
A	2.05 in (52 mm)
B	3.78 in (96 mm)
Weight	12.69 lbs
Exit Type	Side
Nominal Length	4.37 in (111 mm)
Frame Size (H x L)	4.25 in (108 mm) x 4.75 in (121 mm)

Electrical characteristics

Supply Current Frequency	60 Hz

Order information

Type	No. Items Per Sales Unit	No. Items Per Standard Package
Distributor Kit	1	3

Specifications by lamp and line voltage

Lamp	Specifications by line voltage			
M135		**120**	**277**	**347**
400W	System Wattage (W)	465	465	465
PS	Nominal Current	4.10 A	1.78 A	1.40 A
	Ballast Factor	1	1	1
	Ballast Efficiency Factor	0.86	0.86	0.86
	Max Input Current	4.51 A	1.96 A	1.54 A
	Starting Current	4.10 A	4.10 A	4.10 A
	Open Circuit Voltage	270V	270V	270V
	Drop Out Voltage	78V	180V	226V
	Power Factor (>=)%	90	90	90
	Min. Starting Temp (°F/°C)	-40 / -40	-40 / -40	-40 / -40
	Fuse Rating	12	5	4
	UL Bench Top Rise	A	A	A

Safety and performance cUL Listed UL Listed

67343 – GEP75048TAA5-5/2

Pulse Start

1 – 750W PS M149 480

- Magnetic ballast construction ideal for a wide variety of lighting applications
- Precision-wound coils, ensuring even heat dissipation and the highest electrical integrity
- Distributor replacement kit contains the appropriate core and coil with color coded leads, a properly rated capacitor and ignitor (if required) and all other components required for ballast replacement

General characteristics

Ballast Type	Magnetic – Core and Coil
ANSI Lamp Codes	M149
Voltage	480
Line Voltage Regulation (+/-)	10%
Circuit Type	Pulse Start CWA
Insulation Class	Class H, 180°C or Class N, 200°C
Type of Capacitor	Oil filled
Capacitance	28 Mfd GECAP-28/400V-O
Voltage (MIN)	450
Capacitor Temperature Rating	105°C (221°F)
GE Igniter	MH750-1A
Sound Rating	
Additional Info	

Dimensions

Wiring diagram HID W-(D) – see example on page 18-68	
Case dimensions – Ref Drawing PC3 – see page 18-71	
Length (L)	7.75 in (197 mm)
Width (W)	2.75 in (70 mm)
Mounting dimensions	
Mount Length (M)	6.1 in (155 mm)
Mount Width (X or F)	
Mount Slots (MS)	0.25 in (6 mm)
A	3.0
B	5.10
Weight	19.60 lbs
Exit Type	Side
Nominal Length	4.2 in (108 mm)
Frame Size (H x L)	4.25 in x 6.00 in

Electrical characteristics

Supply Current Frequency	60 Hz

Order information

Type	No. Items Per Sales Unit	No. Items Per Standard Package
Distributor Kit	1	2

Specifications by lamp and line voltage

Lamp	Specifications by line voltage	
M149		**480**
750W Quartz	System Wattage (W)	820
Metal Halide	Nominal Current	1.75 A
	Ballast Factor	1
	Ballast Efficiency Factor	0.90
	Max Input Current	1.75 A
	Starting Current	5.40 A
	Open Circuit Voltage	330V
	Drop Out Voltage	660V
	Power Factor (>=)%	90
	Min. Starting Temp (°F/°C)	-20 / -30
	Fuse Rating	3
	UL Bench Top Rise	A or C

Safety and performance cUL Listed UL Listed

See page E-1 for warranty information.

67350 – GEP750MLTAA5-5/2

Pulse Start

1 – 750W PS M149 Quad (120/208/240/277V)

- Magnetic ballast construction ideal for a wide variety of lighting applications
- Precision-wound coils, ensuring even heat dissipation and the highest electrical integrity
- Distributor replacement kit contains the appropriate core and coil with color coded leads, a properly rated capacitor and ignitor (if required) and all other components required for ballast replacement
- Quad ballast (120, 208, 240, 277)

General characteristics

Ballast Type	Magnetic – Core and Coil
ANSI Lamp Codes	M149
Voltage	120/208/240/277
Line Voltage Regulation (+/-)	10%
Circuit Type	Pulse Start CWA
Insulation Class	Class H, 180°C or Class N, 200°C
Type of Capacitor	Oil filled
Capacitance	28 Mfd GECAP-28/400V-O
Voltage (MIN)	450
Capacitor Temperature Rating	105°C (221°F)
GE Igniter	MH750-1B
Sound Rating	
Additional Info	

Electrical characteristics

Supply Current Frequency	60 Hz

Order information

Type	No. Items Per Sales Unit	No. Items Per Standard Package
Distributor Kit	1	2

Specifications by lamp and line voltage

Lamp	Specifications by line voltage				
M149		**120**	**208**	**240**	**277**
750W Quartz Metal Halide	System Wattage (W)	820	820	820	820
	Nominal Current	7.0 A	4.0 A	3.5 A	3.0 A
	Ballast Factor	1	1	1	1
	Ballast Efficiency Factor	0.90	0.90	0.90	0.90
	Max Input Current	7.0 A	4.0 A	3.5 A	3.0 A
	Starting Current	5.40 A	5.40 A	5.40 A	5.40 A
	Open Circuit Voltage	335V	335V	335V	335V
	Drop Out Voltage	670V	670V	670V	670V
	Power Factor (>=)%	90	90	90	90
	Min. Starting Temp (°F/°C)	-20 / -30	-20 / -30	-20 / -30	-20 / -30
	Fuse Rating	14	8	7	6
	UL Bench Top Rise	A or D	A or D	A or D	A or D

Dimensions

Wiring diagram HID W-(A) – see example on page 18-68	
Case dimensions – Ref Drawing PC3 – see page 18-71	
Length (L)	7.75 in (197 mm)
Width (W)	2.75 in (70 mm)
Mounting dimensions	
Mount Length (M)	6.1 in (155 mm)
Mount Width (X or F)	
Mount Slots (MS)	0.25 in (6 mm)
A	3.0
B	5.10
Weight	20.00 lbs
Exit Type	Side
Nominal Length	4.2 in (108 mm)
Frame Size (H x L)	4.25 in x 6.00 in

Safety and performance

cUL Listed UL Listed

78531 – GEP750TRIAC5-5

Pulse Start

1 – 750W PS M149 Tri Tap (120/277/347V)

- Magnetic ballast construction ideal for a wide variety of lighting applications
- Precision-wound coils, ensuring even heat dissipation and the highest electrical integrity
- Distributor replacement kit contains the appropriate core and coil with color coded leads, a properly rated capacitor and ignitor (if required) and all other components required for ballast replacement
- Tri Tap ballast (120/277/347)

General characteristics

Ballast Type	Magnetic – Core and Coil
ANSI Lamp Codes	M149
Voltage	120/277/347
Line Voltage Regulation (+/-)	10%
Circuit Type	Pulse Start CWA
Insulation Class	Class N, 200C
Type of Capacitor	Oil filled
Capacitance	28 Mfd GECAP-28/400V-O
Voltage (MIN)	450
Capacitor Temperature Rating	105°C (221°F)
GE Igniter	MH750-1B
Sound Rating	
Additional Info	

Electrical characteristics

Supply Current Frequency	60 Hz

Order information

Type	No. Items Per Sales Unit	No. Items Per Standard Package
Distributor Kit	1	2

Specifications by lamp and line voltage

Lamp	Specifications by line voltage			
M149		**120**	**277**	**347**
750W PS	System Wattage (W)	840	840	840
	Nominal Current	7.3 A	3.16 A	2.50 A
	Ballast Factor	1	1	1
	Ballast Efficiency Factor	0.91	0.91	0.91
	Max Input Current	8.0 A	3.5 A	2.80 A
	Starting Current	5.50 A	5.50 A	5.50 A
	Open Circuit Voltage	340V	340V	340V
	Drop Out Voltage	84V	194V	243V
	Power Factor (>=)%	90	90	90
	Min. Starting Temp (°F/°C)	-40 / -40	-40 / -40	-40 / -40
	Fuse Rating	22	11	10
	UL Bench Top Rise	A	A	A

Dimensions

Wiring diagram HID W-(L) – see example on page 18-69	
Case dimensions – Ref Drawing PC3 – see page 18-71	
Length (L)	5.25 in (133 mm)
Width (W)	1.25 in (32 mm)
Mounting dimensions	
Mount Length (M)	
Mount Width (X or F)	
Mount Slots (MS)	
A	2.80 in (71 mm)
B	4.50 in (114 mm)
Weight	20.83 lbs
Exit Type	Side
Nominal Length	5.37 in (136 mm)
Frame Size (H x L)	4.25 in (108 mm) x 6 in (152 mm)

Safety and performance

cUL Listed UL Listed

See page E-1 for warranty information.

Pulse Start

HID Electronic and Electromagnetic For 175 – 1000W Pulse Start Metal Halide HID Lamps

67348 – GEP1000MLTAA5-5/2

Pulse Start

1 – 1000W PS M141 Quad (120/208/240/277V)

General characteristics

Ballast Type	Magnetic – Core and Coil
ANSI Lamp Codes	M141
Voltage	120/208/240/277
Line Voltage Regulation (+/-)	10%
Circuit Type	Pulse Start CWA
Insulation Class	Class H, 180°C or Class N, 200°C
Type of Capacitor	Oil filled
Capacitance	24 Mfd GECAP-24/480V-O
Voltage (MIN)	480
Capacitor Temperature Rating	105°C (221°F)
GE Igniter	HPS100-4B
Sound Rating	D (37-42 decibels)
Additional Info	

Electrical characteristics

Supply Current Frequency	60 Hz

Order information

Type	No. Items Per Sales Unit	No. Items Per Standard Package
Distributor Kit	1	2

Specifications by lamp and line voltage

Lamp	Specifications by line voltage				
M141		120	208	240	277
	System Wattage (W)	1075	1075	1075	1075
	Nominal Current	9.0 A	5.2 A	4.5 A	3.9 A
	Ballast Factor	1	1	1	1
	Ballast Efficiency Factor	0.91	0.91	0.91	0.91
	Max Input Current	9.0 A	5.2 A	4.5 A	3.9 A
	Starting Current	5.60 A	5.60 A	5.60 A	5.60 A
	Open Circuit Voltage	420V	420V	420V	420V
	Drop Out Voltage	840V	840V	840V	840V
	Power Factor (>=)%	90	90	90	90
	Min. Starting Temp (°F/°C)	-20 / -30	-20 / -30	-20 / -30	-20 / -30
	Fuse Rating	18	10	9	8
	UL Bench Top Rise	A or D	A or D	A or D	A or D

Dimensions

Wiring diagram HID W-(A) – see example on page 18-68	
Case dimensions – Ref Drawing PC2 – see page 18-71	
Width (W)	7.75 in (197 mm)
Length (L)	2.75 in (70 mm)
Mounting dimensions	
Mount Length (M)	6.1 in (155 mm)
Mount Width (X or F)	6.1 in (155 mm)
Mount Slots (MS)	0.25 in (6 mm)
A	3.05
B	5.20
Weight	20.30 lbs
Exit Type	Side
Nominal Length	4.25 in (108 mm)
Frame Size (H x L)	4.25 in x 6.00 in

Safety and performance

cUL Listed UL Listed

78532 – GEP1000TRIAC5-5

Pulse Start

1 – 1000W PS M141 Tri Tap (120/277/347V)

General characteristics

Ballast Type	Magnetic – Core and Coil
ANSI Lamp Codes	M141
Voltage	120/277/347
Line Voltage Regulation (+/-)	10%
Circuit Type	Pulse Start CWA
Insulation Class	Class N, 200C
Type of Capacitor	Oil filled
Capacitance	25 Mfd
Voltage (MIN)	450
Capacitor Temperature Rating	105°C (221°F)
GE Igniter	HPS1000-4B
Sound Rating	D (37-42 decibels)
Additional Info	

Electrical characteristics

Supply Current Frequency	60 Hz

Order information

Type	No. Items Per Sales Unit	No. Items Per Standard Package
Distributor Kit	1	2

Specifications by lamp and line voltage

Lamp	Specifications by line voltage			
M141		120	277	347
1000W	System Wattage (W)	1075	1075	1075
PS	Nominal Current	9.0 A	3.9 A	3.1 A
	Ballast Factor	1	1	1
	Ballast Efficiency Factor	0.92	0.92	0.92
	Max Input Current	9.9 A	4.3 A	3.4 A
	Starting Current	5.50 A	5.50 A	5.50 A
	Open Circuit Voltage	390V	390V	390V
	Drop Out Voltage			
	Power Factor (>=)%	90	90	90
	Min. Starting Temp (°F/°C)	-40 / -40	-40 / -40	-40 / -40
	Fuse Rating	30	12	10
	UL Bench Top Rise	A	A	A

Dimensions

Wiring diagram HID W-(L) – see example on page 18-69	
Case dimensions – Ref Drawing PC3 – see page 18-71	
Width (W)	5.25 in (133 mm)
Length (L)	1.25 in (32 mm)
Mounting dimensions	
Mount Length (M)	
Mount Width (X or F)	
Mount Slots (MS)	
A	2.80 in (71 mm)
B	4.50 in (114 mm)
Weight	21.0 lbs
Exit Type	Side
Nominal Length	5.37 in (136 mm)
Frame Size (H x L)	4.25 in (108 mm) x 6.0 in (152 mm)

Safety and performance

cUL Listed UL Listed

See page E-1 for warranty information.

67349 – GEP1000ML5AA5-5/2

Pulse Start

1 – 1000W PS M141 5-Tap (120/208/240/277/480V)

General characteristics

Ballast Type	Magnetic – Core and Coil
ANSI Lamp Codes	M141
Voltage	120/208/240/277/480
Line Voltage Regulation (+/-)	10%
Circuit Type	Pulse Start CWA
Insulation Class	Class H, 180°C or Class N, 200°C
Type of Capacitor	Oil filled
Capacitance	24 Mfd GECAP-24/480V-O
Voltage (MIN)	540
Capacitor Temperature Rating	105°C (221°F)
GE Igniter	HPS1000-4B
Sound Rating	D (37-42 decibels)
Additional Info	

Electrical characteristics

Supply Current Frequency	60 Hz

Order information

Type	No. Items Per Sales Unit	No. Items Per Standard Package
Distributor Kit	1	2

Dimensions

Wiring diagram HID W-(A) – see example on page 18-68	
Case dimensions – Ref Drawing PC3 – see page 18-71	
Width (W)	7.75 in (197 mm)
Length (L)	2.75 in (70 mm)
Mounting dimensions	
Mount Length (M)	6.1 in (155 mm)
Mount Width (X or F)	6.1 in (155 mm)
Mount Slots (MS)	0.25 in (6 mm)
A	3.25
B	5.40
Weight	21.90 lbs
Exit Type	Side
Nominal Length	4.25 in (108 mm)
Frame Size (H x L)	4.25 in x 6.00 in

Specifications by lamp and line voltage

Lamp	Specifications by line voltage					
M141		**120**	**208**	**240**	**277**	**480**
	System Wattage (W)	1050	1050	1050	1050	1050
	Nominal Current	9.00 A	5.20 A	4.50 A	3.90 A	2.25 A
	Ballast Factor	1	1	1	1	1
	Ballast Efficiency Factor	0.91	0.91	0.91	0.91	0.91
	Max Input Current	9.00 A	5.20 A	4.50 A	3.90 A	2.25 A
	Starting Current	5.60 A	5.60 A	5.60 A	5.60 A	5.60 A
	Open Circuit Voltage	420V	420V	420V	420V	420V
	Drop Out Voltage	840V	840V	840V	840V	840V
	Power Factor (>=)%	90	90	90	90	90
	Min. Starting Temp (°F/°C)	-20 / -30	-20 / -30	-20 / -30	-20 / -30	-20 / -30
	Fuse Rating	18	10	9	7	5
	UL Bench Top Rise	A or C	A or C	A or C	A or C	A or C

Safety and performance

cUL Listed UL Listed

See page E-1 for warranty information.

High Pressure Sodium
HID Electronic and Electromagnetic For 50 – 150W High Pressure Sodium HID Lamps

87152 – GES50MLTLC3D-5

High Pressure Sodium

1 – 50W HPS S68 Quad (120/208/240/277V)

- Magnetic ballast construction ideal for a wide variety of lighting applications
- Precision-wound coils, ensuring even heat dissipation and the highest electrical integrity
- Distributor replacement kit contains the appropriate core and coil with color coded leads, a properly rated capacitor and ignitor (if required) and all other components required for ballast replacement
- Quad ballast (120, 208, 240, 277)

General characteristics

Ballast Type	Magnetic – Core and Coil
ANSI Lamp Codes	S68
Voltage	120/208/240/277
Line Voltage Regulation (+/-)	5%
Circuit Type	HX-HPF
Insulation Class	180C
Type of Capacitor	Dry film
Capacitance	5 Mfd GECAP-5/300V-D
Voltage (MIN)	280
Capacitor Temperature Rating	100°C (212°F)
GE Igniter	HPS150-3A
Sound Rating	
Additional Info	

Electrical characteristics

Supply Current Frequency	60 Hz

Order information

Type	No. Items Per Sales Unit	No. Items Per Standard Package
Distributor Kit	1	6

Dimensions

Wiring diagram HID W-(H) – see example on page 18-68	
Case dimensions – Ref Drawing PC1 – see page 18-71	
Length (L)	5.25 in (133 mm)
Width (W)	1.25 in (32 mm)
Mounting dimensions	
Mount Length (M)	4.6 in (117 mm)
Mount Width (X or F)	
Mount Slots (MS)	0.25 in (6 mm)
A	1.0
B	3.0
Weight	3.40 lbs
Exit Type	Side
Nominal Length	2.7 in (70 mm)
Frame Size (H x L)	2.813 in x 3.939 in

Specifications by lamp and line voltage

Lamp	Specifications by line voltage				
S68		**120**	**208**	**240**	**277**
50W High Pressure Sodium	System Wattage (W)	69	69	69	69
	Nominal Current	0.70 A	0.40 A	0.30 A	0.30 A
	Ballast Factor	1	1	1	1
	Ballast Efficiency Factor	0.72	0.72	0.72	0.72
	Max Input Current	0.93 A	0.54 A	0.46 A	0.40 A
	Starting Current	0.74 A	0.43 A	0.37 A	0.32 A
	Open Circuit Voltage	122V	122V	122V	122V
	Drop Out Voltage	96V	166V	192V	222V
	Power Factor (>=)%	90	90	90	90
	Min. Starting Temp (°F/°C)	-22 / -30	-22 / -30	-22 / -30	-22 / -30
	Fuse Rating	5	3	3	2
	UL Bench Top Rise	B	B	B	B

Safety and performance cUL Listed UL Listed

78533 – GES50TRILC3-5

High Pressure Sodium

1 – 50W HPS S68 Tri Tap (120/277/347V)

- Magnetic ballast construction ideal for a wide variety of lighting applications
- Precision-wound coils, ensuring even heat dissipation and the highest electrical integrity
- Distributor replacement kit contains the appropriate core and coil with color coded leads, a properly rated capacitor and ignitor (if required) and all other components required for ballast replacement
- Tri Tap ballast (120/277/347)

General characteristics

Ballast Type	Magnetic – Core and Coil
ANSI Lamp Codes	S68
Voltage	120/277/347
Line Voltage Regulation (+/-)	5%
Circuit Type	HX-HPF
Insulation Class	Class N, 200C
Type of Capacitor	Dry film
Capacitance	5 Mfd
Voltage (MIN)	300
Capacitor Temperature Rating	105°C (221°F)
GE Igniter	HPS150-3A
Sound Rating	
Additional Info	

Electrical characteristics

Supply Current Frequency	60 Hz

Order information

Type	No. Items Per Sales Unit	No. Items Per Standard Package
Distributor Kit	1	2

Dimensions

Wiring diagram HID W-(L) – see example on page 18-69	
Case dimensions – Ref Drawing PC1 – see page 18-71	
Length (L)	5.25 in (133 mm)
Width (W)	1.25 in (32 mm)
Mounting dimensions	
Mount Length (M)	
Mount Width (X or F)	
Mount Slots (MS)	
A	1.02 in (26 mm)
B	2.48 in (63 mm)
Weight	3.60 lbs
Exit Type	Side
Nominal Length	3.54 in (90 mm)
Frame Size (H x L)	2.82 in (72 mm) x 3.94 in (101 mm)

Specifications by lamp and line voltage

Lamp	Specifications by line voltage			
S68		**120**	**277**	**347**
50W HPS	System Wattage (W)	72	72	72
	Nominal Current	0.66 A	0.29 A	0.23 A
	Ballast Factor	1	1	1
	Ballast Efficiency Factor	0.73	0.73	0.73
	Max Input Current	.73 A	.32 A	.25 A
	Starting Current	1.60 A	1.60 A	1.60 A
	Open Circuit Voltage	120V	120V	120V
	Drop Out Voltage	102V	235V	295V
	Power Factor (>=)%	90	90	90
	Min. Starting Temp (°F/°C)	-40 / -40	-40 / -40	-40 / -40
	Fuse Rating	2	1	1
	UL Bench Top Rise	A	A	A

Safety and performance cUL Listed UL Listed

See page E-1 for warranty information.

86587 – GES70MLTLA3D-5

High Pressure Sodium

1 – 70W HPS S62 Quad (120/208/240/277V)

- Magnetic ballast construction ideal for a wide variety of lighting applications
- Precision-wound coils, ensuring even heat dissipation and the highest electrical integrity
- Distributor replacement kit contains the appropriate core and coil with color coded leads, a properly rated capacitor and ignitor (if required) and all other components required for ballast replacement
- Quad ballast (120, 208, 240, 277)

General characteristics

Ballast Type	Magnetic – Core and Coil
ANSI Lamp Codes	S62
Voltage	120/208/240/277
Line Voltage Regulation (+/-)	5%
Circuit Type	HX-HPF
Insulation Class	180C
Type of Capacitor	Dry film
Capacitance	7 Mfd GECAP-7/300V-D
Voltage (MIN)	300
Capacitor Temperature Rating	100°C (212°F)
GE Igniter	HPS150-3A
Sound Rating	
Additional Info	

Electrical characteristics

Supply Current Frequency	60 Hz

Order information

Type	No. Items Per Sales Unit	No. Items Per Standard Package
Distributor Kit	1	6

Dimensions

Wiring diagram HID W-(H) – see example on page 18-68	
Case dimensions – Ref Drawing PC1 – see page 18-71	
Length (L)	5.25 in (133 mm)
Width (W)	1.25 in (32 mm)
Mounting dimensions	
Mount Length (M)	4.6 in (117 mm)
Mount Width (X or F)	
Mount Slots (MS)	0.25 in (6 mm)
A	2.0
B	3.0
Weight	5.50 lbs
Exit Type	Side
Nominal Length	2.7 in (70 mm)
Frame Size (H x L)	2.813 in x 3.939 in

Specifications by lamp and line voltage

Lamp	Specifications by line voltage				
S62		**120**	**208**	**240**	**277**
70W High Pressure Sodium	System Wattage (W)	91	91	91	91
	Nominal Current	0.80 A	0.50 A	0.40 A	0.40 A
	Ballast Factor	1	1	1	1
	Ballast Efficiency Factor	0.77	0.77	0.77	0.77
	Max Input Current	1.34 A	0.78 A	0.67 A	0.59 A
	Starting Current	0.78 A	0.46 A	0.39 A	0.35 A
	Open Circuit Voltage	118V	118V	118V	118V
	Drop Out Voltage	96V	166V	192V	222V
	Power Factor (>=)%	90	90	90	90
	Min. Starting Temp (°F/°C)	-22 / -30	-22 / -30	-22 / -30	-22 / -30
	Fuse Rating	5	3	3	2
	UL Bench Top Rise	B	B	B	B

Safety and performance cUL Listed UL Listed

78534 – GES70TRILC3-5

High Pressure Sodium

1 – 70W HPS S62 Tri Tap (120/277/347V)

- Magnetic ballast construction ideal for a wide variety of lighting applications
- Precision-wound coils, ensuring even heat dissipation and the highest electrical integrity
- Distributor replacement kit contains the appropriate core and coil with color coded leads, a properly rated capacitor and ignitor (if required) and all other components required for ballast replacement
- Tri Tap ballast (120/277/347)

General characteristics

Ballast Type	Magnetic – Core and Coil
ANSI Lamp Codes	S62
Voltage	120/277/347
Line Voltage Regulation (+/-)	5%
Circuit Type	HX-HPF
Insulation Class	Class N, 200C
Type of Capacitor	Dry film
Capacitance	7 Mfd GECAP-7/300V-D
Voltage (MIN)	300
Capacitor Temperature Rating	105°C (221°F)
GE Igniter	HPS150-3A
Sound Rating	
Additional Info	

Electrical characteristics

Supply Current Frequency	50 Hz/60 Hz

Order information

Type	No. Items Per Sales Unit	No. Items Per Standard Package
Distributor Kit	1	6

Dimensions

Wiring diagram HID W-(L) – see example on page 18-69	
Case dimensions – Ref Drawing PC1 – see page 18-71	
Length (L)	5.25 in (133 mm)
Width (W)	1.25 in (32 mm)
Mounting dimensions	
Mount Length (M)	
Mount Width (X or F)	
Mount Slots (MS)	
A	1.50 in (38 mm)
B	2.95 in (75 mm)
Weight	4.85 lbs
Exit Type	Side
Nominal Length	3.54 in (90 mm)
Frame Size (H x L)	2.82 in (72 mm) x 3.94 in (101 mm)

Specifications by lamp and line voltage

Lamp	Specifications by line voltage			
S62		**120**	**277**	**347**
70W HPS	System Wattage (W)	96	96	96
	Nominal Current	0.88 A	0.38 A	0.30 A
	Ballast Factor	1	1	1
	Ballast Efficiency Factor	0.745	0.745	0.745
	Max Input Current	.97 A	.42 A	.033 A
	Starting Current	2.10 A	2.10 A	2.10 A
	Open Circuit Voltage	120V	120V	120V
	Drop Out Voltage	102V	235V	295V
	Power Factor (>=)%	90	90	90
	Min. Starting Temp (°F/°C)	-40 / -40	-40 / -40	-40 / -40
	Fuse Rating	3	1.5	1
	UL Bench Top Rise	A	A	A

Safety and performance cUL Listed UL Listed

See page E-1 for warranty information.

High Pressure Sodium
HID Electronic and Electromagnetic For 50 – 150W High Pressure Sodium HID Lamps

67340 – GES7048TLA3D-5/2

High Pressure Sodium

1 – 70W HPS S62 480V

- Magnetic ballast construction ideal for a wide variety of lighting applications
- Precision-wound coils, ensuring even heat dissipation and the highest electrical integrity
- Distributor replacement kit contains the appropriate core and coil with color coded leads, a properly rated capacitor and ignitor (if required) and all other components required for ballast replacement

General characteristics

Ballast Type	Magnetic – Core and Coil
ANSI Lamp Codes	S62
Voltage	480
Line Voltage Regulation (+/-)	5%
Circuit Type	HX-HPF
Insulation Class	Class H, 180°C or Class N, 200°C
Type of Capacitor	Dry film
Capacitance	7 Mfd GECAP-7/300V-D
Voltage (MIN)	300
Capacitor Temperature Rating	105°C (221°F)
GE Igniter	HPS150-3A 86635
Sound Rating	
Additional Info	

Electrical characteristics

Supply Current Frequency	60 Hz

Order information

Type	No. Items Per Sales Unit	No. Items Per Standard Package
Distributor Kit	1	6

Dimensions

Wiring diagram HID W-(F) – see example on page 18-68	
Case dimensions – Ref Drawing PC1 – see page 18-71	
Length (L)	5.25 in (133 mm)
Width (W)	1.25 in (32 mm)
Mounting dimensions	
Mount Length (M)	4.6 in (117 mm)
Mount Width (X or F)	
Mount Slots (MS)	0.25 in (6 mm)
A	1.9
B	3.0
Weight	6.00 lbs
Exit Type	Side
Nominal Length	2.7 in (70 mm)
Frame Size (H x L)	2.813 in x 3.939 in

Specifications by lamp and line voltage

Lamp	Specifications by line voltage	
S62		**480**
70W High Pressure Sodium	System Wattage (W)	93
	Nominal Current	0.22 A
	Ballast Factor	1
	Ballast Efficiency Factor	0.74
	Max Input Current	0.22 A
	Starting Current	1.85 A
	Open Circuit Voltage	120V
	Drop Out Voltage	170V
	Power Factor (>=)%	90
	Min. Starting Temp (°F/°C)	-20 / -30
	Fuse Rating	1
	UL Bench Top Rise	A

Safety and performance cUL Listed UL Listed

87074 – GES100MLTLC3D-5

High Pressure Sodium

1 – 100W HPS S54 Quad (120/208/240/277V)

- Magnetic ballast construction ideal for a wide variety of lighting applications
- Precision-wound coils, ensuring even heat dissipation and the highest electrical integrity
- Distributor replacement kit contains the appropriate core and coil with color coded leads, a properly rated capacitor and ignitor (if required) and all other components required for ballast replacement
- Quad ballast (120, 208, 240, 277)

General characteristics

Ballast Type	Magnetic – Core and Coil
ANSI Lamp Codes	S54
Voltage	120/208/240/277
Line Voltage Regulation (+/-)	5%
Circuit Type	HX-HPF
Insulation Class	180C
Type of Capacitor	Dry film
Capacitance	10 Mfd GECAP-10/400V-O
Voltage (MIN)	280
Capacitor Temperature Rating	100°C (212°F)
GE Igniter	HPS150-3A 86635
Sound Rating	
Additional Info	

Electrical characteristics

Supply Current Frequency	60 Hz

Order information

Type	No. Items Per Sales Unit	No. Items Per Standard Package
Distributor Kit	1	6

Dimensions

Wiring diagram HID W-(H) – see example on page 18-68	
Case dimensions – Ref Drawing PC1 – see page 18-71	
Length (L)	5.25 in (133 mm)
Width (W)	1.25 in (32 mm)
Mounting dimensions	
Mount Length (M)	4.6 in (117 mm)
Mount Width (X or F)	
Mount Slots (MS)	0.25 in (6 mm)
A	2.0
B	4.0
Weight	6.20 lbs
Exit Type	Side
Nominal Length	2.7 in (70 mm)
Frame Size (H x L)	2.813 in x 3.939 in

Specifications by lamp and line voltage

Lamp	Specifications by line voltage				
S54		**120**	**208**	**240**	**277**
100W High Pressure Sodium	System Wattage (W)	123	123	123	123
	Nominal Current	2.20 A	1.30 A	1.10 A	0.90 A
150W High Pressure Sodium	Ballast Factor	1	1	1	1
	Ballast Efficiency Factor	1.22	1.22	1.22	1.22
	Max Input Current	2.18 A	1.27 A	1.13 A	0.94 A
	Starting Current	0.74 A	0.43 A	0.36 A	0.31 A
	Open Circuit Voltage	119V	119V	119V	119V
	Drop Out Voltage	96V	166V	192V	222V
	Power Factor (>=)%	90	90	90	90
	Min. Starting Temp (°F/°C)	-22 / -30	-22 / -30	-22 / -30	-22 / -30
	Fuse Rating	8	5	5	3
	UL Bench Top Rise	B	B	B	B

Safety and performance cUL Listed UL Listed

See page E-1 for warranty information.

78535 – GES100TRILC3-5

High Pressure Sodium

1 – 100W HPS S54 Tri Tap (120/277/347V)

- Magnetic ballast construction ideal for a wide variety of lighting applications
- Precision-wound coils, ensuring even heat dissipation and the highest electrical integrity
- Distributor replacement kit contains the appropriate core and coil with color coded leads, a properly rated capacitor and ignitor (if required) and all other components required for ballast replacement
- Tri Tap ballast (120/277/347)

General characteristics

Ballast Type	Magnetic – Core and Coil
ANSI Lamp Codes	S54
Voltage	120/277/347
Line Voltage Regulation (+/-)	5%
Circuit Type	HX-HPF
Insulation Class	Class N, 200C
Type of Capacitor	Dry film
Capacitance	10 Mfd GECAP-10/400V-O
Voltage (MIN)	300
Capacitor Temperature Rating	105°C (221°F)
GE Igniter	HPS150-3A
Sound Rating	
Additional Info	

Electrical characteristics

Supply Current Frequency	60 Hz

Order information

Type	No. Items Per Sales Unit	No. Items Per Standard Package
Distributor Kit	1	6

Dimensions

Wiring diagram HID W-(L) – see example on page 18-69	
Case dimensions – Ref Drawing PC1 – see page 18-71	
Length (L)	5.25 in (133 mm)
Width (W)	1.25 in (32 mm)
Mounting dimensions	
Mount Length (M)	
Mount Width (X or F)	
Mount Slots (MS)	
A	2.00 in (38 mm)
B	3.47 in (75 mm)
Weight	6.38 lbs
Exit Type	Side
Nominal Length	3.54 in (90 mm)
Frame Size (H x L)	2.82 in (72 mm) x 3.94 in (101 mm)

Specifications by lamp and line voltage

Lamp	Specifications by line voltage			
S54		**120**	**277**	**347**
100W HPS	System Wattage (W)	129	129	129
	Nominal Current	1.16 A	0.50 A	0.40 A
	Ballast Factor	1	1	1
	Ballast Efficiency Factor	0.78	0.78	0.78
	Max Input Current	1.16 A	.55 A	.44 A
	Starting Current	2.80 A	2.80 A	2.80 A
	Open Circuit Voltage	120V	120V	120V
	Drop Out Voltage	102V	235V	295V
	Power Factor (>=)%	90	90	90
	Min. Starting Temp (°F/°C)	-40 / -40	-40 / -40	-40 / -40
	Fuse Rating	3	2	1.5
	UL Bench Top Rise	A	A	A

Safety and performance

cUL Listed UL Listed

67338 – GES10048TLA3D-5/2

High Pressure Sodium

1 – 100W HPS S54 480V

- Magnetic ballast construction ideal for a wide variety of lighting applications
- Precision-wound coils, ensuring even heat dissipation and the highest electrical integrity
- Distributor replacement kit contains the appropriate core and coil with color coded leads, a properly rated capacitor and ignitor (if required) and all other components required for ballast replacement

General characteristics

Ballast Type	Magnetic – Core and Coil
ANSI Lamp Codes	S54
Voltage	480
Line Voltage Regulation (+/-)	5%
Circuit Type	HX-HPF
Insulation Class	Class H, 180°C or Class N, 200°C
Type of Capacitor	Dry film
Capacitance	10 Mfd GECAP-10/400V-O
Voltage (MIN)	300
Capacitor Temperature Rating	105°C (221°F)
GE Igniter	HPS150-3A
Sound Rating	
Additional Info	

Electrical characteristics

Supply Current Frequency	60 Hz

Order information

Type	No. Items Per Sales Unit	No. Items Per Standard Package
Distributor Kit	1	6

Dimensions

Wiring diagram HID W-(F) – see example on page 18-68	
Case dimensions – Ref Drawing PC1 – see page 18-71	
Length (L)	5.25 in (133 mm)
Width (W)	1.25 in (32 mm)
Mounting dimensions	
Mount Length (M)	4.6 in (117 mm)
Mount Width (X or F)	
Mount Slots (MS)	0.25 in (6 mm)
A	2.0
B	3.10
Weight	6.20 lbs
Exit Type	Side
Nominal Length	2.7 in (69 mm)
Frame Size (H x L)	2.813 in x 3.939 in

Specifications by lamp and line voltage

Lamp	Specifications by line voltage	
S54		**480**
100W High Pressure Sodium	System Wattage (W)	125
	Nominal Current	0.29 A
	Ballast Factor	1
150W High Pressure Sodium	Ballast Efficiency Factor	0.79
	Max Input Current	0.29 A
	Starting Current	2.85 A
	Open Circuit Voltage	120V
	Drop Out Voltage	170V
	Power Factor (>=)%	90
	Min. Starting Temp (°F/°C)	-20 / -30
	Fuse Rating	1
	UL Bench Top Rise	A

Safety and performance

cUL Listed UL Listed

High Pressure Sodium

HID Electronic and Electromagnetic For 50 – 150W High Pressure Sodium HID Lamps

87094 – GES150MLTLC3D-5

High Pressure Sodium

1 – 150W HPS S55 Quad (120/208/240/277V)

- Magnetic ballast construction ideal for a wide variety of lighting applications
- Precision-wound coils, ensuring even heat dissipation and the highest electrical integrity
- Distributor replacement kit contains the appropriate core and coil with color coded leads, a properly rated capacitor and ignitor (if required) and all other components required for ballast replacement
- Quad ballast (120, 208, 240, 277)

General characteristics

Ballast Type	Magnetic – Core and Coil
ANSI Lamp Codes	S55
Voltage	120/208/240/277
Line Voltage Regulation (+/-)	5%
Circuit Type	HX-HPF
Insulation Class	180C
Type of Capacitor	Dry film
Capacitance	14 Mfd GECAP-14/280V-D
Voltage (MIN)	280
Capacitor Temperature Rating	100°C (212°F)
GE Igniter	HPS150-3A
Sound Rating	
Additional Info	

Dimensions

Wiring diagram HID W-(H) – see example on page 18-68	
Case dimensions – Ref Drawing PC1 – see page 18-71	
Length (L)	5.25 in (133 mm)
Width (W)	1.25 in (32 mm)
Mounting dimensions	
Mount Length (M)	4.6 in (117 mm)
Mount Width (X or F)	
Mount Slots (MS)	0.25 in (6 mm)
A	3.0
B	4.0
Weight	7.60 lbs
Exit Type	Side
Nominal Length	2.7 in (69 mm)
Frame Size (H x L)	2.813 in x 3.939 in

Electrical characteristics

Supply Current Frequency	60 Hz

Order information

Type	No. Items Per Sales Unit	No. Items Per Standard Package
Distributor Kit	1	6

Specifications by lamp and line voltage

Lamp	Specifications by line voltage				
S55		**120**	**208**	**240**	**277**
150W High Pressure Sodium	System Wattage (W)	175	175	175	175
	Nominal Current	1.60 A	0.90 A	0.80 A	0.70 A
250W Quartz Metal Halide	Ballast Factor	1	1	1	1
	Ballast Efficiency Factor	1.43	1.43	1.43	1.43
	Max Input Current	2.72 A	1.53 A	1.34 A	1.16 A
	Starting Current	1.64 A	0.88 A	0.76 A	0.65 A
	Open Circuit Voltage	115V	115V	115V	115V
	Drop Out Voltage	96V	166V	192V	222V
	Power Factor (>=)%	90	90	90	90
	Min. Starting Temp (°F/°C)	-22 / -30	-22 / -30	-22 / -30	-22 / -30
	Fuse Rating	10	5	5	5
	UL Bench Top Rise	B	B	B	B

Safety and performance cUL Listed UL Listed

78536 – GES150TRILC3-5

High Pressure Sodium

1 – 150W HPS S55 Tri Tap (120/277/347V)

- Magnetic ballast construction ideal for a wide variety of lighting applications
- Precision-wound coils, ensuring even heat dissipation and the highest electrical integrity
- Distributor replacement kit contains the appropriate core and coil with color coded leads, a properly rated capacitor and ignitor (if required) and all other components required for ballast replacement
- Tri Tap ballast (120/277/347)

General characteristics

Ballast Type	Magnetic – Core and Coil
ANSI Lamp Codes	S55
Voltage	120/277/347
Line Voltage Regulation (+/-)	5%
Circuit Type	HX-HPF
Insulation Class	Class N, 200C
Type of Capacitor	Dry film
Capacitance	14 Mfd GECAP-14/280V-D
Voltage (MIN)	300
Capacitor Temperature Rating	105°C (221°F)
GE Igniter	HPS150-3A
Sound Rating	
Additional Info	

Dimensions

Wiring diagram HID W-(L) – see example on page 18-69	
Case dimensions – Ref Drawing PC1 – see page 18-71	
Length (L)	5.25 in (133 mm)
Width (W)	1.25 in (32 mm)
Mounting dimensions	
Mount Length (M)	
Mount Width (X or F)	
Mount Slots (MS)	
A	2.48 in (63 mm)
B	4.94 in (126 mm)
Weight	7.83 lbs
Exit Type	Side
Nominal Length	3.54 in (90 mm)
Frame Size (H x L)	2.82 in (72 mm) x 3.94 in (101 mm)

Electrical characteristics

Supply Current Frequency	60 Hz

Order information

Type	No. Items Per Sales Unit	No. Items Per Standard Package
Distributor Kit	1	6

Specifications by lamp and line voltage

Lamp	Specifications by line voltage			
S55		**120**	**277**	**347**
150W HPS	System Wattage (W)	190	190	190
	Nominal Current	1.66 A	0.72 A	0.58 A
	Ballast Factor	1	1	1
	Ballast Efficiency Factor	0.79	0.79	0.79
	Max Input Current	1.83 A	.80 A	.64 A
	Starting Current	4.10 A	4.10 A	4.10 A
	Open Circuit Voltage	120V	120V	120V
	Drop Out Voltage	102V	235V	295V
	Power Factor (>=)%	90	90	90
	Min. Starting Temp (°F/°C)	-40 / -40	-40 / -40	-40 / -40
	Fuse Rating	5	3	2
	UL Bench Top Rise	A	A	A

Safety and performance cUL Listed UL Listed

See page E-1 for warranty information.

67339 – GES15048TLA3D-5/2

High Pressure Sodium

1 – 150W HPS S55 480V

- Magnetic ballast construction ideal for a wide variety of lighting applications
- Precision-wound coils, ensuring even heat dissipation and the highest electrical integrity
- Distributor replacement kit contains the appropriate core and coil with color coded leads, a properly rated capacitor and ignitor (if required) and all other components required for ballast replacement

General characteristics

Ballast Type	Magnetic – Core and Coil
ANSI Lamp Codes	S55
Voltage	480
Line Voltage Regulation (+/-)	5%
Circuit Type	HX-HPF
Insulation Class	Class H, 180°C or Class N, 200°C
Type of Capacitor	Dry film
Capacitance	14 Mfd GECAP-14/280V-D
Voltage (MIN)	300
Capacitor Temperature Rating	100°C (212°F)
GE Igniter	HPS150-3A 86635
Sound Rating	
Additional Info	

Electrical characteristics

Supply Current Frequency	60 Hz

Order information

Type	No. Items Per Sales Unit	No. Items Per Standard Package
Distributor Kit	1	6

Specifications by lamp and line voltage

Lamp	Specifications by line voltage	
S55		480
150W High Pressure Sodium	System Wattage (W)	190
	Nominal Current	0.42 A
250W Quartz Metal Halide	Ballast Factor	1
	Ballast Efficiency Factor	0.78
	Max Input Current	0.42 A
	Starting Current	4.10 A
	Open Circuit Voltage	120V
	Drop Out Voltage	170V
	Power Factor (>=)%	90
	Min. Starting Temp (°F/°C)	-20 / -30
	Fuse Rating	2
	UL Bench Top Rise	A or D

Safety and performance

UL Listed

Dimensions

Wiring diagram HID W-(F) – see example on page 18-68	
Case dimensions – Ref Drawing PC1 – see page 18-71	
Length (L)	5.25 in (133 mm)
Width (W)	1.25 in (32 mm)
Mounting dimensions	
Mount Length (M)	4.6 in (117 mm)
Mount Width (X or F)	
Mount Slots (MS)	0.25 in (6 mm)
A	2.65
B	4.0
Weight	8.00 lbs
Exit Type	Side
Nominal Length	2.7 in (69 mm)
Frame Size (H x L)	2.813 in x 3.939 in

See page E-1 for warranty information.

High Pressure Sodium

HID Electronic and Electromagnetic For 250 – 1000W High Pressure Sodium HID Lamps

87214 – GES250ML5AA4-5

High Pressure Sodium

1 – 250W HPS S50 5-Tap (120/208/240/277/480V)

- Magnetic ballast construction ideal for a wide variety of lighting applications
- Precision-wound coils, ensuring even heat dissipation and the highest electrical integrity
- Distributor replacement kit contains the appropriate core and coil with color coded leads, a properly rated capacitor and ignitor (if required) and all other components required for ballast replacement
- 5-tap ballast (120, 208, 240, 277, or 480 volt) featuring a 480-volt tap

General characteristics

Ballast Type	Magnetic – Core and Coil
ANSI Lamp Codes	S50
Voltage	120/208/240/277/480
Line Voltage Regulation (+/-)	10%
Circuit Type	CWA
Insulation Class	180C
Type of Capacitor	Oil filled
Capacitance	35 Mfd GECAP-35/240V-O
Voltage (MIN)	240
Capacitor Temperature Rating	100°C (212°F)
GE Igniter	HPS400-3A
Sound Rating	
Additional Info	

Electrical characteristics

Supply Current Frequency	60 Hz

Order information

Type	No. Items Per Sales Unit	No. Items Per Standard Package
Distributor Kit	1	3

Dimensions

Wiring diagram HID W-(B) – see example on page 18-68	
Case dimensions – Ref-Drawing PC2 – see page 18-71	
Length (L)	5.25 in (133 mm)
Width (W)	1.25 in (32 mm)
Mounting dimensions	
Mount Length (M)	4.6 in (117 mm)
Mount Width (X or F)	
Mount Slots (MS)	0.25 in (6 mm)
A	2.0
B	4.0
Weight	12.00 lbs
Exit Type	Side
Nominal Length	3.7 in (95 mm)
Frame Size (H x L)	4.25 in x 4.75 in
Lead lengths	
Orange	
Violet and Black	
Violet/White	
Black/Yellow	

Specifications by lamp and line voltage

Lamp	Specifications by line voltage					
S50		**120**	**208**	**240**	**277**	**480**
250W High Pressure Sodium	System Wattage (W)	292	292	292	292	292
	Nominal Current	2.50 A	1.50 A	1.30 A	1.10 A	0.60 A
	Ballast Factor	1	1	1	1	1
	Ballast Efficiency Factor	0.86	0.86	0.86	0.86	0.86
	Max Input Current	2.50 A	1.50 A	1.30 A	1.10 A	0.60 A
	Starting Current	1.59 A	0.93 A	0.81 A	0.70 A	0.40 A
	Open Circuit Voltage	186V	186V	186V	186V	186V
	Drop Out Voltage	96V	166V	192V	222V	384V
	Power Factor (>=)%	90	90	90	90	90
	Min. Starting Temp (°F/°C)	-22 / -30	-22 / -30	-22 / -30	-22 / -30	-22 / -30
	Fuse Rating	8	5	4	4	4
	UL Bench Top Rise	C	C	B	B	B

Safety and performance cUL Listed UL Listed

87121 – GES250MLTAC4-5

High Pressure Sodium

1 – 250W HPS S50 Quad (120/208/240/277V)

- Magnetic ballast construction ideal for a wide variety of lighting applications
- Precision-wound coils, ensuring even heat dissipation and the highest electrical integrity
- Distributor replacement kit contains the appropriate core and coil with color coded leads, a properly rated capacitor and ignitor (if required) and all other components required for ballast replacement
- Quad ballast (120, 208, 240, 277)

General characteristics

Ballast Type	Magnetic – Core and Coil
ANSI Lamp Codes	S50
Voltage	120/208/240/277
Line Voltage Regulation (+/-)	10%
Circuit Type	CWA
Insulation Class	180C
Type of Capacitor	Oil filled
Capacitance	35 Mfd GECAP-35/240V-O
Voltage (MIN)	240
Capacitor Temperature Rating	100°C (212°F)
GE Igniter	HPS400-3A
Sound Rating	
Additional Info	

Electrical characteristics

Supply Current Frequency	60 Hz

Order information

Type	No. Items Per Sales Unit	No. Items Per Standard Package
Distributor Kit	1	3

Dimensions

Wiring diagram HID W-(A) – see example on page 18-68	
Case dimensions – Ref Drawing PC2 – see page 18-71	
Length (L)	5.25 in (133 mm)
Width (W)	1.25 in (32 mm)
Mounting dimensions	
Mount Length (M)	4.6 in (117 mm)
Mount Width (X or F)	
Mount Slots (MS)	0.25 in (6 mm)
A	2.0
B	4.0
Weight	11.00 lbs
Exit Type	Side
Nominal Length	3.7 in (95 mm)
Frame Size (H x L)	4.25 in x 4.75 in

Specifications by lamp and line voltage

Lamp	Specifications by line voltage				
S50		**120**	**208**	**240**	**277**
250W High Pressure Sodium	System Wattage (W)	303	303	303	303
	Nominal Current	2.60 A	1.50 A	1.30 A	1.10 A
	Ballast Factor	1	1	1	1
	Ballast Efficiency Factor	0.83	0.83	0.83	0.83
	Max Input Current	2.60 A	1.50 A	1.30 A	1.10 A
	Starting Current	1.50 A	0.86 A	0.75 A	0.63 A
	Open Circuit Voltage	186V	186V	186V	186V
	Drop Out Voltage	96V	166V	192V	222V
	Power Factor (>=)%	90	90	90	90
	Min. Starting Temp (°F/°C)	-22 / -30	-22 / -30	-22 / -30	-22 / -30
	Fuse Rating	8	5	4	4
	UL Bench Top Rise	A	A	A	A

Safety and performance cUL Listed UL Listed

See page E-1 for warranty information.

78537 – GES250TRIAC4-5

High Pressure Sodium

1 – 250W HPS S50 Tri Tap (120/277/347V)

- Magnetic ballast construction ideal for a wide variety of lighting applications
- Precision-wound coils, ensuring even heat dissipation and the highest electrical integrity
- Distributor replacement kit contains the appropriate core and coil with color coded leads, a properly rated capacitor and ignitor (if required) and all other components required for ballast replacement
- Tri Tap ballast (120/277/347)

General characteristics

Ballast Type	Magnetic – Core and Coil
ANSI Lamp Codes	S50
Voltage	120/277/347
Line Voltage Regulation (+/-)	10%
Circuit Type	CWA
Insulation Class	Class N, 200C
Type of Capacitor	Oil filled
Capacitance	33 Mfd
Voltage (MIN)	300
Capacitor Temperature Rating	105°C (221°F)
GE Igniter	HPS400-3A
Sound Rating	
Additional Info	

Electrical characteristics

Supply Current Frequency	50 Hz/60 Hz

Order information

Type	No. Items Per Sales Unit	No. Items Per Standard Package
Distributor Kit	1	3

Dimensions

Wiring diagram HID W-(L) – see example on page 18-69	
Case dimensions – Ref Drawing PC2 – see page 18-71	
Length (L)	5.25 in (133 mm)
Width (W)	1.25 in (32 mm)
Mounting dimensions	
Mount Length (M)	
Mount Width (X or F)	
Mount Slots (MS)	
A	1.62 in (41 mm)
B	3.50 in (89 mm)
Weight	10.16 lbs
Exit Type	Side
Nominal Length	4.37 in (111 mm)
Frame Size (H x L)	4.25 in (108 mm) x 4.75 in (121 mm)

Specifications by lamp and line voltage

Lamp	Specifications by line voltage			
S50		**120**	**277**	**347**
250W	System Wattage (W)	295	295	295
HPS	Nominal Current	2.55 A	1.10 A	0.88 A
	Ballast Factor	1	1	1
	Ballast Efficiency Factor	0.84	0.84	0.84
	Max Input Current	2.80 A	1.21 A	.97 A
	Starting Current	4.0 A	4.0 A	4.0 A
	Open Circuit Voltage	120V	120V	120V
	Drop Out Voltage	84V	194V	243V
	Power Factor (>=)%	90	90	90
	Min. Starting Temp (°F/°C)	-40 / -40	-40 / -40	-40 / -40
	Fuse Rating	8	3	3
	UL Bench Top Rise	A	A	B

Safety and performance cUL Listed UL Listed

63066 – GES400ML5AA4-5 (replaces 87215)

High Pressure Sodium

1 – 400W HPS S51 5-Tap (120/208/240/277/480V)

- Magnetic ballast construction ideal for a wide variety of lighting applications
- Precision-wound coils, ensuring even heat dissipation and the highest electrical integrity
- Distributor replacement kit contains the appropriate core and coil with color coded leads, a properly rated capacitor and ignitor (if required) and all other components required for ballast replacement
- 5-tap ballast (120, 208, 240, 277, or 480 volt) featuring a 480-volt tap

General characteristics

Ballast Type	Magnetic – Core and Coil
ANSI Lamp Codes	S51
Voltage	120/208/240/277/480
Line Voltage Regulation (+/-)	10%
Circuit Type	CWA
Insulation Class	180C
Type of Capacitor	Oil filled
Capacitance	55 Mfd GECAP-55/240V-O
Voltage (MIN)	240
Capacitor Temperature Rating	100°C (212°F)
GE Igniter	HPS400-3A 86641
Sound Rating	
Additional Info	

Electrical characteristics

Supply Current Frequency	60 Hz

Order information

Type	No. Items Per Sales Unit	No. Items Per Standard Package
Distributor Kit	1	3

Dimensions

Wiring diagram HID W-(B) – see example on page 18-68	
Case dimensions – Ref Drawing PC2 – see page 18-71	
Length (L)	5.25 in (133 mm)
Width (W)	1.25 in (32 mm)
Mounting dimensions	
Mount Length (M)	4.6 in (117 mm)
Mount Width (X or F)	
Mount Slots (MS)	0.25 in (6 mm)
A	2.0
B	4.0
Weight	15.00 lbs
Exit Type	Side
Nominal Length	4.2 in (108 mm)
Frame Size (H x L)	4.25 in x 4.75 in
Lead lengths	
Orange	
Violet and Black	
Violet/White	
Black/Yellow	

Specifications by lamp and line voltage

Lamp	Specifications by line voltage					
S51		**120**	**208**	**240**	**277**	**480**
400W High	System Wattage (W)	472	472	472	472	472
Pressure Sodium	Nominal Current	4.00 A	2.20 A	2.00 A	1.70 A	1.00 A
	Ballast Factor	1	1	1	1	1
	Ballast Efficiency Factor	0.85	0.85	0.85	0.85	0.85
	Max Input Current	4.00 A	2.20 A	2.00 A	1.70 A	1.00 A
	Starting Current	2.87 A	1.66 A	1.44 A	1.25 A	0.72 A
	Open Circuit Voltage	191V	191V	191V	191V	191V
	Drop Out Voltage	96V	166V	192V	222V	384V
	Power Factor (>=)%	90	90	90	90	90
	Min. Starting Temp (°F/°C)	-22 / -30	-22 / -30	-22 / -30	-22 / -30	-22 / -30
	Fuse Rating	15	8	8	5	5
	UL Bench Top Rise	C	C	C	C	C

Safety and performance cUL Listed UL Listed

See page E-1 for warranty information.

High Pressure Sodium
HID Electronic and Electromagnetic For 250 – 1000W High Pressure Sodium HID Lamps

87164 – GES400MLTAC4-5

High Pressure Sodium

1 – 400W HPS S51 Quad (120/208/240/277V)

- Magnetic ballast construction ideal for a wide variety of lighting applications
- Precision-wound coils, ensuring even heat dissipation and the highest electrical integrity
- Distributor replacement kit contains the appropriate core and coil with color coded leads, a properly rated capacitor and ignitor (if required) and all other components required for ballast replacement
- Quad ballast (120, 208, 240, 277)

General characteristics

Ballast Type	Magnetic – Core and Coil
ANSI Lamp Codes	S51
Voltage	120/208/240/277
Line Voltage Regulation (+/-)	10%
Circuit Type	CWA
Insulation Class	180C
Type of Capacitor	Oil filled
Capacitance	55 Mfd GECAP-55/240V-O
Voltage (MIN)	240
Capacitor Temperature Rating	100°C (212°F)
GE Igniter	HPS400-3A 86641
Sound Rating	
Additional Info	

Electrical characteristics

Supply Current Frequency	60 Hz

Order information

Type	No. Items Per Sales Unit	No. Items Per Standard Package
Distributor Kit	1	3

Dimensions

Wiring diagram HID W-(A) – see example on page 18-68	
Case dimensions – Ref Drawing PC2 – see page 18-71	
Length (L)	5.25 in (133 mm)
Width (W)	1.25 in (32 mm)
Mounting dimensions	
Mount Length (M)	4.6 in (117 mm)
Mount Width (X or F)	
Mount Slots (MS)	0.25 in (6 mm)
A	2.0
B	4.0
Weight	13.60 lbs
Exit Type	Side
Nominal Length	4.2 in (108 mm)
Frame Size (H x L)	4.25 in x 4.75 in

Specifications by lamp and line voltage

Lamp	Specifications by line voltage				
S51		**120**	**208**	**240**	**277**
400W High Pressure Sodium	System Wattage (W)	443	443	443	443
	Nominal Current	3.80 A	2.20 A	1.90 A	1.60 A
	Ballast Factor	1	1	1	1
	Ballast Efficiency Factor	0.90	0.90	0.90	0.90
	Max Input Current	3.80 A	2.20 A	1.90 A	1.60 A
	Starting Current	1.78 A	1.03 A	0.90 A	0.77 A
	Open Circuit Voltage	186V	186V	186V	186V
	Drop Out Voltage	96V	166V	192V	222V
	Power Factor (>=)%	90	90	90	90
	Min. Starting Temp (°F/°C)	-22 / -30	-22 / -30	-22 / -30	-22 / -30
	Fuse Rating	15	8	8	5
	UL Bench Top Rise	D	D	D	D

Safety and performance cUL Listed UL Listed

78539 – GES400TRIAC4-5

High Pressure Sodium

1 – 400W HPS S51 Tri Tap (120/277/347V)

- Magnetic ballast construction ideal for a wide variety of lighting applications
- Precision-wound coils, ensuring even heat dissipation and the highest electrical integrity
- Distributor replacement kit contains the appropriate core and coil with color coded leads, a properly rated capacitor and ignitor (if required) and all other components required for ballast replacement
- Tri Tap ballast (120/277/347)

General characteristics

Ballast Type	Magnetic – Core and Coil
ANSI Lamp Codes	S51
Voltage	120/277/347
Line Voltage Regulation (+/-)	10%
Circuit Type	CWA
Insulation Class	Class N, 200C
Type of Capacitor	Oil filled
Capacitance	55 Mfd GECAP-55/240V-O
Voltage (MIN)	300
Capacitor Temperature Rating	105°C (221°F)
GE Igniter	HPS400-3A
Sound Rating	
Additional Info	

Electrical characteristics

Supply Current Frequency	50 Hz/60 Hz

Order information

Type	No. Items Per Sales Unit	No. Items Per Standard Package
Distributor Kit	1	3

Dimensions

Wiring diagram HID W-(L) – see example on page 18-69	
Case dimensions – Ref Drawing PC2 – see page 18-71	
Length (L)	5.25 in (133 mm)
Width (W)	1.25 in (32 mm)
Mounting dimensions	
Mount Length (M)	
Mount Width (X or F)	
Mount Slots (MS)	
A	2.33 in (59 mm)
B	4.21 in (107 mm)
Weight	13.91 lbs
Exit Type	Side
Nominal Length	4.37 in (111 mm)
Frame Size (H x L)	4.25 in (108 mm) x 4.75 in (121 mm)

Specifications by lamp and line voltage

Lamp	Specifications by line voltage			
S51		**120**	**277**	**347**
400W HPS	System Wattage (W)	465	465	465
	Nominal Current	4.0 A	1.75 A	1.40 A
	Ballast Factor	1	1	1
	Ballast Efficiency Factor	0.85	0.85	0.85
	Max Input Current	4.4 A	1.93 A	1.54 A
	Starting Current	6.50 A	6.50 A	6.50 A
	Open Circuit Voltage	186V	186V	186V
	Drop Out Voltage	84V	194V	243V
	Power Factor (>=)%	90	90	90
	Min. Starting Temp (°F/°C)	-40 / -40	-40 / -40	-40 / -40
	Fuse Rating	12	6	4
	UL Bench Top Rise	D	D	D

Safety and performance cUL Listed UL Listed

See page E-1 for warranty information.

87198 – GES40048TAC4-5

High Pressure Sodium

1 – 400W HPS S51 480V in smaller frame

- Magnetic ballast construction ideal for a wide variety of lighting applications
- Precision-wound coils, ensuring even heat dissipation and the highest electrical integrity
- Distributor replacement kit contains the appropriate core and coil with color coded leads, a properly rated capacitor and ignitor (if required) and all other components required for ballast replacement

General characteristics

Ballast Type	Magnetic – Core and Coil
ANSI Lamp Codes	S51
Voltage	480
Line Voltage Regulation (+/-)	10%
Circuit Type	CWA
Insulation Class	180C
Type of Capacitor	Oil filled
Capacitance	55 Mfd GECAP-55/240V-O
Voltage (MIN)	240
Capacitor Temperature Rating	100°C (212°F)
GE Igniter	HPS400-3A
Sound Rating	
Additional Info	

Electrical characteristics

Supply Current Frequency	60 Hz

Order information

Type	No. Items Per Sales Unit	No. Items Per Standard Package
Distributor Kit	1	3

Specifications by lamp and line voltage

Lamp	Specifications by line voltage	
S51		**480**
400W High Pressure Sodium	System Wattage (W)	475
	Nominal Current	1.00 A
	Ballast Factor	1
	Ballast Efficiency Factor	0.84
	Max Input Current	1.00 A
	Starting Current	0.60 A
	Open Circuit Voltage	195V
	Drop Out Voltage	384V
	Power Factor (>=)%	90
	Min. Starting Temp (°F/°C)	-22 / -30
	Fuse Rating	5
	UL Bench Top Rise	D

Dimensions

Wiring diagram HID W-(D) – see example on page 18-68	
Case dimensions – Ref Drawing PC2 – see page 18-71	
Length (L)	5.25 in (133 mm)
Width (W)	1.25 in (32 mm)
Mounting dimensions	
Mount Length (M)	4.6 in (117 mm)
Mount Width (X or F)	
Mount Slots (MS)	0.25 in (6 mm)
A	2.3
B	4.1
Weight	15.00 lbs
Exit Type	Side
Nominal Length	4.2 in (108 mm)
Frame Size (H x L)	4.25 in x 4.75 in

Safety and performance

cUL Listed UL Listed

67351 – GES100048TAA5-5/2

High Pressure Sodium

1 – 1000W HPS S52 480V

- Magnetic ballast construction ideal for a wide variety of lighting applications
- Precision-wound coils, ensuring even heat dissipation and the highest electrical integrity
- Distributor replacement kit contains the appropriate core and coil with color coded leads, a properly rated capacitor and ignitor (if required) and all other components required for ballast replacement

General characteristics

Ballast Type	Magnetic – Core and Coil
ANSI Lamp Codes	S52
Voltage	480
Line Voltage Regulation (+/-)	10%
Circuit Type	CWA
Insulation Class	Class H, 180°C or Class N, 200°C
Type of Capacitor	Oil filled
Capacitance	26 Mfd GECAP-26/525V-O
Voltage (MIN)	540
Capacitor Temperature Rating	105°C (221°F)
GE Igniter	HPS 1000-48
Sound Rating	
Additional Info	

Electrical characteristics

Supply Current Frequency	60 Hz

Order information

Type	No. Items Per Sales Unit	No. Items Per Standard Package
Distributor Kit	1	2

Specifications by lamp and line voltage

Lamp	Specifications by line voltage	
S52		**480**
1000W High Pressure Sodium	System Wattage (W)	1,110
	Nominal Current	2.38 A
	Ballast Factor	1
	Ballast Efficiency Factor	0.90
	Max Input Current	2.38 A
	Starting Current	6.80 A
	Open Circuit Voltage	440V
	Drop Out Voltage	870V
	Power Factor (>=)%	90
	Min. Starting Temp (°F/°C)	-20 / -30
	Fuse Rating	5
	UL Bench Top Rise	A or D

Dimensions

Wiring diagram HID W-(D) – see example on page 18-68	
Case dimensions – Ref Drawing PC3 – see page 18-71	
Length (L)	7.75 in (197 mm)
Width (W)	2.75 in (70 mm)
Mounting dimensions	
Mount Length (M)	6.1 in (155 mm)
Mount Width (X or F)	
Mount Slots (MS)	0.25 in (6 mm)
A	4.5
B	6.6
Weight	28.60 lbs
Exit Type	Side
Nominal Length	4.7 in (121 mm)
Frame Size (H x L)	4.25 in x 6.00 in

Safety and performance

cUL Listed UL Listed

See page E-1 for warranty information.

High Pressure Sodium

HID Electronic and Electromagnetic For 250 – 1000W High Pressure Sodium HID Lamps

87218 – GES1000ML5AA5-5

High Pressure Sodium

1 – 1000W HPS S52 5-Tap (120/208/240/277/480V)

- Magnetic ballast construction ideal for a wide variety of lighting applications
- Precision-wound coils, ensuring even heat dissipation and the highest electrical integrity
- Distributor replacement kit contains the appropriate core and coil with color coded leads, a properly rated capacitor and ignitor (if required) and all other components required for ballast replacement
- 5-tap ballast (120, 208, 240, 277, or 480 volt) featuring a 480-volt tap

General characteristics

Ballast Type	Magnetic – Core and Coil
ANSI Lamp Codes	S52
Voltage	120/208/240/277/480
Line Voltage Regulation (+/-)	10%
Circuit Type	CWA
Insulation Class	180C
Type of Capacitor	Oil filled
Capacitance	26 Mfd GECAP-26/525V-O
Voltage (MIN)	525
Capacitor Temperature Rating	100°C (212°F)
GE Igniter	HPS1000-4B
Sound Rating	
Additional Info	

Electrical characteristics

Supply Current Frequency	60 Hz

Order information

Type	No. Items Per Sales Unit	No. Items Per Standard Package
Distributor Kit	1	2

Dimensions

Wiring diagram HID W-(B) – see example on page 18-68	
Case dimensions – Ref Drawing PC3 – see page 18-71	
Length (L)	7.75 in (197 mm)
Width (W)	2.75 in (70 mm)
Mounting dimensions	
Mount Length (M)	6.1 in (155 mm)
Mount Width (X or F)	
Mount Slots (MS)	0.25 in (6 mm)
A	4.0
B	6.0
Weight	28.00 lbs
Exit Type	Side
Nominal Length	4.7 in (121 mm)
Frame Size (H x L)	4.25 in x 6.00 in
Lead lengths	
Orange	
Violet and Black	
Violet/White	
Black/Yellow	

Specifications by lamp and line voltage

Lamp	Specifications by line voltage					
S52		**120**	**208**	**240**	**277**	**480**
1000W High Pressure Sodium	System Wattage (W)	1,102	1,102	1,102	1,102	1,102
	Nominal Current	9.50 A	5.50 A	4.70 A	4.10 A	2.40 A
	Ballast Factor	1	1	1	1	1
	Ballast Efficiency Factor	0.91	0.91	0.91	0.91	0.91
	Max Input Current	9.50 A	5.50 A	4.70 A	4.10 A	2.40 A
	Starting Current	5.75 A	3.40 A	2.90 A	2.60 A	1.80 A
	Open Circuit Voltage	435V	435V	435V	435V	435V
	Drop Out Voltage	96V	166V	192V	222V	384V
	Power Factor (>=)%	90	90	90	90	90
	Min. Starting Temp (°F/°C)	-22 / -30	-22 / -30	-22 / -30	-22 / -30	-22 / -30
	Fuse Rating	20	15	10	10	8
	UL Bench Top Rise	D	D	D	D	D

Safety and performance cUL Listed UL Listed

67352 – GES1000MLTAA5-5/2

High Pressure Sodium

1 – 1000W HPS S52 Quad (120/208/240/277V)

- Magnetic ballast construction ideal for a wide variety of lighting applications
- Precision-wound coils, ensuring even heat dissipation and the highest electrical integrity
- Distributor replacement kit contains the appropriate core and coil with color coded leads, a properly rated capacitor and ignitor (if required) and all other components required for ballast replacement
- Quad ballast (120, 208, 240, 277)

General characteristics

Ballast Type	Magnetic – Core and Coil
ANSI Lamp Codes	S52
Voltage	120/208/240/277
Line Voltage Regulation (+/-)	10%
Circuit Type	CWA
Insulation Class	Class H, 180°C or Class N, 200°C
Type of Capacitor	Oil filled
Capacitance	26 Mfd GECAP-26/525V-O
Voltage (MIN)	540
Capacitor Temperature Rating	105°C (221°F)
GE Igniter	HPS1000-4B
Sound Rating	
Additional Info	

Electrical characteristics

Supply Current Frequency	60 Hz

Order information

Type	No. Items Per Sales Unit	No. Items Per Standard Package
Distributor Kit	1	2

Dimensions

Wiring diagram HID W-(A) – see example on page 18-68	
Case dimensions – Ref Drawing PC3 – see page 18-71	
Length (L)	7.75 in (197 mm)
Width (W)	2.75 in (70 mm)
Mounting dimensions	
Mount Length (M)	6.1 in (155 mm)
Mount Width (X or F)	
Mount Slots (MS)	0.25 in (6 mm)
A	4.5
B	6.6
Weight	28.60 lbs
Exit Type	Side
Nominal Length	4.7 in (121 mm)
Frame Size (H x L)	4.25 in x 6.00 in

Specifications by lamp and line voltage

Lamp	Specifications by line voltage				
S52		**120**	**208**	**240**	**277**
1000W High Pressure Sodium	System Wattage (W)	1,110	1,110	1,110	1,110
	Nominal Current	9.50 A	5.50 A	4.75 A	4.10A
	Ballast Factor	1	1	1	1
	Ballast Efficiency Factor	0.90	0.90	0.90	0.90
	Max Input Current	9.50 A	5.50 A	4.75 A	4.10A
	Starting Current	6.80 A	6.80 A	6.80 A	6.80 A
	Open Circuit Voltage	440V	440V	440V	440V
	Drop Out Voltage	870V	870V	870V	870V
	Power Factor (>=)%	90	90	90	90
	Min. Starting Temp (°F/°C)	-20 / -30	-20 / -30	-20 / -30	-20 / -30
	Fuse Rating	20	10	9	8
	UL Bench Top Rise	A or D	A or D	A or D	A or D

Safety and performance cUL Listed UL Listed

See page E-1 for warranty information.

78540 – GES1000TRIAC5-5

High Pressure Sodium

1 – 1000W HPS S52 Tri Tap (120/277/347V)

General characteristics

Ballast Type	Magnetic – Core and Coil
ANSI Lamp Codes	S52
Voltage	120/277/347
Line Voltage Regulation (+/-)	10%
Circuit Type	CWA
Insulation Class	Class N, 200C
Type of Capacitor	Oil filled
Capacitance	26 Mfd GECAP-26/525V-O
Voltage (MIN)	540
Capacitor Temperature Rating	105°C (221°F)
GE Igniter	HPS1000-4B
Sound Rating	
Additional Info	

Electrical characteristics

Supply Current Frequency	50 Hz/60 Hz

Order information

Type	No. Items Per Sales Unit	No. Items Per Standard Package
Distributor Kit	1	2

Specifications by lamp and line voltage

Lamp	Specifications by line voltage			
S52		**120**	**277**	**347**
1000W	System Wattage (W)	1100	1100	1100
HPS	Nominal Current	9.50 A	4.10 A	3.30 A
	Ballast Factor	1	1	1
	Ballast Efficiency Factor	0.9	0.9	0.9
	Max Input Current	10.4 A	4.5 A	3.6 A
	Starting Current	7.0 A	7.0 A	7.0 A
	Open Circuit Voltage	425V	425V	425V
	Drop Out Voltage	84V	194V	243V
	Power Factor (>=)%	90	90	90
	Min. Starting Temp (°F/°C)	-40 / -40	-40 / -40	-40 / -40
	Fuse Rating	30	12	10
	UL Bench Top Rise	A	A	A

Safety and performance

cUL Listed UL Listed

- Magnetic ballast construction ideal for a wide variety of lighting applications
- Precision-wound coils, ensuring even heat dissipation and the highest electrical integrity
- Distributor replacement kit contains the appropriate core and coil with color coded leads, a properly rated capacitor and ignitor (if required) and all other components required for ballast replacement
- Tri Tap ballast (120/277/347)

Dimensions

Wiring diagram HID W-(L) – see example on page 18-69	
Case dimensions – Ref Drawing PC3 – see page 18-71	
Length (L)	5.25 in (133 mm)
Width (W)	1.25 in (32 mm)
Mounting dimensions	
Mount Length (M)	
Mount Width (X or F)	
Mount Slots (MS)	
A	3.74 in (95 mm)
B	5.71 in (145 mm)
Weight	27.42 lbs
Exit Type	Side
Nominal Length	5.37 in (137 mm)
Frame Size (H x L)	4.25 in (108 mm) x 6.0 in (152 mm)

See page E-1 for warranty information.

High Intensity Discharge Lamp and Ballast Kits
HID Electronic and Electromagnetic Ballasts

71701 – GEM175ML5AC3-55

High Intensity Discharge Lamp and Ballast Kits

1 – 175W MH M57 5-Tap (120/208/240/277/480V) Lamp & Ballast Kit (-55)

- Magnetic ballast construction ideal for a wide variety of lighting applications
- Precision-wound coils, ensuring even heat dissipation and the highest electrical integrity
- Distributor replacement kit contains the appropriate core and coil with color coded leads, a properly rated capacitor and ignitor (if required) and all other components required for ballast replacement
- 5-tap ballast (120, 208, 240, 277, or 480 volt) featuring a 480-volt tap

General characteristics

Ballast Type	Magnetic – Core and Coil
ANSI Lamp Codes	M57, H38, M109
Voltage	120/208/240/277/480
Line Voltage Regulation (+/-)	10%
Circuit Type	CWA
Insulation Class	180C
Type of Capacitor	Oil filled
Capacitance	10 Mfd
Voltage (MIN)	400
Capacitor Temperature Rating	100°C (212°F)
GE Igniter	
Sound Rating	
Additional Info	

Electrical characteristics

Supply Current Frequency	60 Hz

Order information

Type	No. Items Per Sales Unit	No. Items Per Standard Package
Distributor Kit	1	6

Dimensions

Wiring diagram HID W-(K) – see example on page 18-69	
Case dimensions – Ref Drawing PC2 – see page 18-71	
Length (L)	5.3 in (133 mm)
Width (W)	1.3 in (33 mm)
Mounting dimensions	
Mount Length (M)	4.6 in (117 mm)
Mount Width (X or F)	
Mount Slots (MS)	0.3 in (8 mm)
A	3.0
B	4.0
Weight	8.00 lbs
Exit Type	Side
Nominal Length	3.2 in (83 mm)
Frame Size (H x L)	2.813 in x 3.939 in
Lead Lengths	
Orange and Red	
Violet and Black	
Black/Yellow	
Violet/White	
Yellow	

Specifications by lamp and line voltage

Lamp	Specifications by line voltage	120	208	240	277	480
M57, M109	System Wattage (W)	202	202	202	202	202
	Nominal Current	1.70 A	1.00 A	0.90 A	0.80 A	0.40 A
	Ballast Factor	1	1	1	1	1
	Ballast Efficiency Factor	0.87	0.87	0.87	0.87	0.87
	Max Input Current	1.70 A	1.00 A	0.90 A	0.80 A	0.40 A
	Starting Current	0.60 A	0.37 A	0.32 A	0.28 A	0.21 A
	Open Circuit Voltage	307V	307V	307V	307V	307V
	Drop Out Voltage	96V	166V	192V	222V	384V
	Power Factor (>=)%	90	90	90	90	90
	Min. Starting Temp (°F/°C)	-22 / -30	-22 / -30	-22 / -30	-22 / -30	-22 / -30
	Fuse Rating	5	3	3	2	1.5
	UL Bench Top Rise	D	C	C	C	C

Safety and performance cUL Listed UL Listed

71702 – GEM250ML5AC3-55

High Intensity Discharge Lamp and Ballast Kits

1 – 250W MH M58 5-Tap (120/208/240/277/480V) Lamp & Ballast Kit (-55)

- Magnetic ballast construction ideal for a wide variety of lighting applications
- Precision-wound coils, ensuring even heat dissipation and the highest electrical integrity
- Distributor replacement kit contains the appropriate core and coil with color coded leads, a properly rated capacitor and ignitor (if required) and all other components required for ballast replacement
- 5-tap ballast (120, 208, 240, 277, or 480 volt) featuring a 480-volt tap

General characteristics

Ballast Type	Magnetic – Core and Coil
ANSI Lamp Codes	M58, H37
Voltage	120/208/240/277/480
Line Voltage Regulation (+/-)	10%
Circuit Type	CWA
Insulation Class	180C
Type of Capacitor	Oil filled
Capacitance	15 Mfd
Voltage (MIN)	400
Capacitor Temperature Rating	100°C (212°F)
GE Igniter	
Sound Rating	
Additional Info	

Electrical characteristics

Supply Current Frequency	60 Hz

Order information

Type	No. Items Per Sales Unit	No. Items Per Standard Package
Distributor Kit	1	6

Dimensions

Wiring diagram HID W-(H) – see example on page 18-68	
Case dimensions – Ref Drawing PC1 – see page 18-71	
Length (L)	5.3 in (133 mm)
Width (W)	1.3 in (33 mm)
Mounting dimensions	
Mount Length (M)	4.6 in (117 mm)
Mount Width (X or F)	
Mount Slots (MS)	0.3 in (8 mm)
A	3.0
B	4.3
Weight	9.00 lbs
Exit Type	Side
Nominal Length	3.2 in (83 mm)
Frame Size (H x L)	2.813 in x 3.939 in
Lead Lengths	
Orange and Red	
Violet and Black	
Black/Yellow	
Violet/White	
Yellow	

Specifications by lamp and line voltage

Lamp	Specifications by line voltage	120	208	240	277	480
M58	System Wattage (W)	280	280	280	280	280
250W Quartz Metal Halide	Nominal Current	2.50 A	1.40 A	1.25 A	1.10 A	0.65 A
	Ballast Factor	1	1	1	1	1
175W Quartz Metal Halide	Ballast Efficiency Factor	0.89	0.89	0.89	0.89	0.89
	Max Input Current	2.60 A	1.60 A	1.30 A	1.20 A	0.70 A
250W Mercury	Starting Current	1.50 A	1.00 A	0.80 A	0.70 A	0.50 A
	Open Circuit Voltage	290V	290V	290V	290V	290V
	Drop Out Voltage	96V	166V	192V	222V	384V
	Power Factor (>=)%	90	90	90	90	90
	Min. Starting Temp (°F/°C)	-22 / -30	-22 / -30	-22 / -30	-22 / -30	-22 / -30
	Fuse Rating	8	5	4	3	2
	UL Bench Top Rise	B	B	B	C	C

Safety and performance cUL Listed UL Listed

See page E-1 for warranty information.

71703 – GEM400ML5AC4-55

High Intensity Discharge Lamp and Ballast Kits

1 – 400W MH M59 5-Tap (120/208/240/277/480V) Lamp & Ballast Kit (-55)

- Magnetic ballast construction ideal for a wide variety of lighting applications
- Precision-wound coils, ensuring even heat dissipation and the highest electrical integrity
- Distributor replacement kit contains the appropriate core and coil with color coded leads, a properly rated capacitor and ignitor (if required) and all other components required for ballast replacement
- 5-tap ballast (120, 208, 240, 277, or 480 volt) featuring a 480-volt tap

General characteristics

Ballast Type	Magnetic – Core and Coil
ANSI Lamp Codes	M59, H33
Voltage	120/208/240/277/480
Line Voltage Regulation (+/-)	10%
Circuit Type	CWA
Insulation Class	180C
Type of Capacitor	Oil filled
Capacitance	24 Mfd
Voltage (MIN)	400
Capacitor Temperature Rating	100°C (212°F)
GE Igniter	
Sound Rating	
Additional Info	

Electrical characteristics

Supply Current Frequency	60 Hz

Order information

Type	No. Items Per Sales Unit	No. Items Per Standard Package
Distributor Kit	1	3

Dimensions

Wiring diagram HID W-(K) – see example on page 18-69	
Case dimensions – Ref Drawing PC1 – see page 18-71	
Length (L)	5.3 in (133 mm)
Width (W)	1.3 in (33 mm)
Mounting dimensions	
Mount Length (M)	4.6 in (117 mm)
Mount Width (X or F)	
Mount Slots (MS)	0.3 in (8 mm)
A	2.0
B	4.0
Weight	12.50 lbs
Exit Type	Side
Nominal Length	3.7 in (95 mm)
Frame Size (H x L)	4.25 in x 4.75 in
Lead Lengths	
Orange and Red	
Violet and Black	
Black/Yellow	
Violet/White	
Yellow	

Specifications by lamp and line voltage

Lamp	Specifications by line voltage					
M59		**120**	**208**	**240**	**277**	**480**
360W Quartz Metal Halide	System Wattage (W)	436	436	436	436	436
	Nominal Current	3.70 A	2.10 A	1.90 A	1.60 A	0.90 A
400W Quartz Metal Halide	Ballast Factor					
	Ballast Efficiency Factor	0.92	0.92	0.92	0.92	0.92
	Max Input Current	3.70 A	2.10 A	1.90 A	1.60 A	0.90 A
400W Mercury	Starting Current	2.19 A	1.31 A	1.11 A	1.00 A	0.60 A
	Open Circuit Voltage	300V	300V	300V	300V	300V
	Drop Out Voltage	96V	166V	192V	222V	384V
	Power Factor (>=)%	90	90	90	90	90
	Min. Starting Temp (°F/°C)	-22 / -30	-22 / -30	-22 / -30	-22 / -30	-22 / -30
	Fuse Rating	10	8	5	5	5
	UL Bench Top Rise	E	E	E	E	E

Safety and performance cUL Listed UL Listed

71704 – GEM1000ML5AC4-55

High Intensity Discharge Lamp and Ballast Kits

1 – 1000W MH M47 5-Tap (120/208/240/277/480V) Lamp & Ballast Kit (-55)

- Magnetic ballast construction ideal for a wide variety of lighting applications
- Precision-wound coils, ensuring even heat dissipation and the highest electrical integrity
- Distributor replacement kit contains the appropriate core and coil with color coded leads, a properly rated capacitor and ignitor (if required) and all other components required for ballast replacement
- 5-tap ballast (120, 208, 240, 277, or 480 volt) featuring a 480-volt tap

General characteristics

Ballast Type	Magnetic – Core and Coil
ANSI Lamp Codes	M47, H36
Voltage	120/208/240/277/480
Line Voltage Regulation (+/-)	10%
Circuit Type	CWA
Insulation Class	180C
Type of Capacitor	Oil filled
Capacitance	24 Mfd
Voltage (MIN)	400
Capacitor Temperature Rating	100°C (212°F)
GE Igniter	
Sound Rating	
Additional Info	

Electrical characteristics

Supply Current Frequency	60 Hz

Order information

Type	No. Items Per Sales Unit	No. Items Per Standard Package
Distributor Kit	1	2

Dimensions

Wiring diagram HID W-(K) – see example on page 18-69	
Case dimensions – Ref Drawing PC1 – see page 18-71	
Length (L)	7.8 in (197 mm)
Width (W)	2.8 in (70 mm)
Height (H)	
Mounting dimensions	
Mount Length (M)	6.1 in (155 mm)
Mount Width (X or F)	
Mount Slots (MS)	0.3 in (8 mm)
A	3.0
B	5.0
Weight	21.00 lbs
Exit Type	Side
Nominal Length	3.7 in (95 mm)
Frame Size (H x L)	4.25 in x 6.00 in
Lead Lengths	
Orange and Red	
Violet and Black	
Black/Yellow	
Violet/White	
Yellow	

Specifications by lamp and line voltage

Lamp	Specifications by line voltage					
M47		**120**	**208**	**240**	**277**	**480**
1000W Quartz Metal Halide	System Wattage (W)	1103	1103	1103	1103	1103
	Nominal Current	9.30 A	5.40 A	4.70 A	4.10 A	2.40 A
1000W Mercury	Ballast Factor	1	1	1	1	1
	Ballast Efficiency Factor	0.91	0.91	0.91	0.91	0.91
	Max Input Current	9.30 A	5.40 A	4.70 A	4.10 A	2.40 A
	Starting Current	6.34 A	3.71 A	3.20 A	2.79 A	1.65 A
	Open Circuit Voltage	445V	445V	445V	445V	445V
	Drop Out Voltage	96V	166V	192V	222V	384V
	Power Factor (>=)%	90	90	90	90	90
	Min. Starting Temp (°F/°C)	-22 / -30	-22 / -30	-22 / -30	-22 / -30	-22 / -30
	Fuse Rating	20	15	10	10	10
	UL Bench Top Rise	E	C	C	C	D

Safety and performance cUL Listed UL Listed

High Intensity Discharge Lamp and Ballast Kits
HID Electronic and Electromagnetic Ballasts

71705 – GES100MLTLC3D-55

High Intensity Discharge Lamp and Ballast Kits

1 – 100W HPS S54 Quad (120/208/240/277V) Lamp & Ballast Kit (-55)

- Magnetic ballast construction ideal for a wide variety of lighting applications
- Precision-wound coils, ensuring even heat dissipation and the highest electrical integrity
- Distributor replacement kit contains the appropriate core and coil with color coded leads, a properly rated capacitor and ignitor (if required) and all other components required for ballast replacement
- 5-tap ballast (120, 208, 240, 277, or 480 volt) featuring a 480-volt tap

General characteristics

Ballast Type	Magnetic – Core and Coil
ANSI Lamp Codes	S54
Voltage	120/208/240/277
Line Voltage Regulation (+/-)	5%
Circuit Type	HX-HPF
Insulation Class	180C
Type of Capacitor	Dry Film
Capacitance	10 Mfd
Voltage (MIN)	280
Capacitor Temperature Rating	100°C (212°F)
GE Igniter	HPS100-3A 86884
Sound Rating	
Additional Info	

Electrical characteristics

Supply Current Frequency	60 Hz

Order information

Type	No. Items Per Sales Unit	No. Items Per Standard Package
Distributor Kit	1	6

Dimensions

Wiring diagram HID W-(K)– see example on page 18-69	
Case dimensions – Ref Drawing PC3 – see page 18-71	
Length (L)	5.3 in (133 mm)
Width (W)	1.3 in (33 mm)
Mounting dimensions	
Mount Length (M)	4.6 in (117 mm)
Mount Width (X or F)	
Mount Slots (MS)	0.3 in (8 mm)
A	2.0
B	4.0
Weight	6.20 lbs
Exit Type	Side
Nominal Length	2.7 in (69 mm)
Frame Size (H x L)	2.813 in x 3.939 in

Specifications by lamp and line voltage

Lamp	Specifications by line voltage				
S54		**120**	**208**	**240**	**277**
100W High Pressure Sodium	System Wattage (W)	123	123	123	123
	Nominal Current	2.20 A	1.30 A	1.10 A	0.90 A
150W High Pressure Sodium	Ballast Factor	1	1	1	1
	Ballast Efficiency Factor	1.22	1.22	1.22	1.22
	Max Input Current	2.18 A	1.27 A	1.13 A	0.94 A
	Starting Current	0.74 A	0.43 A	0.36 A	0.31 A
	Open Circuit Voltage	119V	119V	119V	119V
	Drop Out Voltage	96V	166V	192V	222V
	Power Factor (>=)%	90	90	90	90
	Min. Starting Temp (°F/°C)	-22 / -30	-22 / -30	-22 / -30	-22 / -30
	Fuse Rating	8	5	5	3
	UL Bench Top Rise	B	B	B	B

Safety and performance

cUL Listed UL Listed

71706 – GES250ML5AC4-55

High Intensity Discharge Lamp and Ballast Kits

1 – 250W HPS S50 5-Tap (120/208/240/277/480V) Lamp & Ballast Kit (-55)

- Magnetic ballast construction ideal for a wide variety of lighting applications
- Precision-wound coils, ensuring even heat dissipation and the highest electrical integrity
- Distributor replacement kit contains the appropriate core and coil with color coded leads, a properly rated capacitor and ignitor (if required) and all other components required for ballast replacement
- 5-tap ballast (120, 208, 240, 277, or 480 volt) featuring a 480-volt tap

General characteristics

Ballast Type	Magnetic – Core and Coil
ANSI Lamp Codes	S50
Voltage	120/208/240/277/480
Line Voltage Regulation (+/-)	10%
Circuit Type	CWA
Insulation Class	180C
Type of Capacitor	Oil Filled
Capacitance	35 Mfd
Voltage (MIN)	240
Capacitor Temperature Rating	100°C (212°F)
GE Igniter	HPS400-3A 86641
Sound Rating	
Additional Info	

Electrical characteristics

Supply Current Frequency	60 Hz

Order information

Type	No. Items Per Sales Unit	No. Items Per Standard Package
Distributor Kit	1	3

Dimensions

Wiring diagram HID W-(B) – see example on page 18-68	
Case dimensions – Ref Drawing PC2 – see page 18-71	
Length (L)	5.3 in (133 mm)
Width (W)	1.3 in (33 mm)
Mounting dimensions	
Mount Length (M)	4.6 in (117 mm)
Mount Width (X or F)	
Mount Slots (MS)	0.3 in (8 mm)
A	2.0
B	4.0
Weight	12.00 lbs
Exit Type	Side
Nominal Length	3.7 in (95 mm)
Frame Size (H x L)	4.25 in x 4.75 in
Lead Lengths	
Orange and Red	
Violet and Black	
Black/Yellow	
Violet/White	
Yellow	

Specifications by lamp and line voltage

Lamp	Specifications by line voltage					
S50		**120**	**208**	**240**	**277**	**480**
250W High Pressure Sodium	System Wattage (W)	292	292	292	292	292
	Nominal Current	2.50 A	1.50 A	1.30 A	1.10 A	0.60 A
	Ballast Factor	1	1	1	1	1
	Ballast Efficiency Factor	0.86	0.86	0.86	0.86	0.86
	Max Input Current	2.50 A	1.50 A	1.30 A	1.10 A	0.60 A
	Starting Current	1.59 A	0.93 A	0.81 A	0.70 A	0.40 A
	Open Circuit Voltage	186V	186V	186V	186V	186V
	Drop Out Voltage	96V	166V	192V	222V	384V
	Power Factor (>=)%	90	90	90	90	90
	Min. Starting Temp (°F/°C)	-22 / -30	-22 / -30	-22 / -30	-22 / -30	-22 / -30
	Fuse Rating	8	5	4	4	4
	UL Bench Top Rise	C	C	B	B	B

Safety and performance

cUL Listed UL Listed

See page E-1 for warranty information.

71707 – GES400ML5AC4-55

High Intensity Discharge Lamp and Ballast Kits

1 – 400W HPS S51 5-Tap (120/208/240/277/480V) Lamp & Ballast Kit (-55)

- Magnetic ballast construction ideal for a wide variety of lighting applications
- Precision-wound coils, ensuring even heat dissipation and the highest electrical integrity
- Distributor replacement kit contains the appropriate core and coil with color coded leads, a properly rated capacitor and ignitor (if required) and all other components required for ballast replacement
- 5-tap ballast (120, 208, 240, 277, or 480 volt) featuring a 480-volt tap

General characteristics

Ballast Type	Magnetic – Core and Coil
ANSI Lamp Codes	S51
Voltage	120/208/240/277/480
Line Voltage Regulation (+/-)	10%
Circuit Type	CWA
Insulation Class	180C
Type of Capacitor	Oil Filled
Capacitance	55 Mfd
Voltage (MIN)	240
Capacitor Temperature Rating	100°C (212°F)
GE Igniter	HPS1000-4B
Sound Rating	
Additional Info	

Electrical characteristics

Supply Current Frequency	60 Hz

Order information

Type	No. Items Per Sales Unit	No. Items Per Standard Package
Distributor Kit	1	3

Dimensions

Wiring diagram HID W-(B) – see example on page 18-68	
Case dimensions – Ref Drawing PC2 – see page 18-71	
Length (L)	5.3 in (133 mm)
Width (W)	1.3 in (33 mm)
Mounting dimensions	
Mount Length (M)	4.6 in (117 mm)
Mount Width (X or F)	
Mount Slots (MS)	0.3 in (8 mm)
A	2.0
B	4.0
Weight	15.00 lbs
Exit Type	Side
Nominal Length	4.2 in (108 mm)
Frame Size (H x L)	4.25 in x 4.75 in
Lead Lengths	
Orange and Red	
Violet and Black	
Black/Yellow	
Violet/White	
Yellow	

Specifications by lamp and line voltage

Lamp	Specifications by line voltage					
S51		**120**	**208**	**240**	**277**	**480**
400W High Pressure Sodium	System Wattage (W)	472	472	472	472	472
	Nominal Current	4.00 A	2.20 A	2.00 A	1.70 A	1.00 A
	Ballast Factor	1	1	1	1	1
	Ballast Efficiency Factor	0.85	0.85	0.85	0.85	0.85
	Max Input Current	4.00 A	2.20 A	2.00 A	1.70 A	1.00 A
	Starting Current	2.87 A	1.66 A	1.44 A	1.25 A	0.72 A
	Open Circuit Voltage	191V	191V	191V	191V	191V
	Drop Out Voltage	96V	166V	192V	222V	384V
	Power Factor (>=)%	90	90	90	90	90
	Min. Starting Temp (°F/°C)	-22 / -30	-22 / -30	-22 / -30	-22 / -30	-22 / -30
	Fuse Rating	15	8	8	5	5
	UL Bench Top Rise	C	C	C	C	C

Safety and performance

cUL Listed UL Listed

HID Metal Halide F-Can
HID Electronic and Electromagnetic Ballasts

86576 – 11210277CTC000C

HID Metal Halide F-Can

1 – 70W M85 120/277 Enclosed and Potted F-Can

- For applications requiring quieter or cooler operation than provided by standard coil and coil ballasts
- Excellent sound-deadening and heat transfer qualities

General characteristics

Ballast Type	Magnetic – F-Can
ANSI Lamp Codes	M85
Voltage	
Line Voltage Regulation (+/-)	5%
Circuit Type	HX-HPF
Insulation Class	90C
Type of Capacitor	
Capacitance	
Voltage (MIN)	
Capacitor Temperature Rating	100°C (212°F)
Sound Rating	
Additional Info	Thermally Protected

Electrical characteristics

Supply Current Frequency	60 Hz

Order information

Type	No. Items Per Sales Unit	No. Items Per Standard Package
Standard Pack	1	4

Dimensions

Wiring diagram HID H34 – see example on page 18-67	
Case dimensions – Ref Drawing FCAN1 – see page 18-70	
Length (L)	11.75 in (299 mm)
Width (W)	3.2 in (81 mm)
Height (H)	2.6 in (67 mm)
Mounting dimensions	
Mount Length (M)	11.1 in (283 mm)
Mount Width (X or F)	2.0 in (51 mm)
Mount Slots (MS)	0.2 in (6 mm)
Weight	11.00 lbs
Exit Type	Side
Remote Mounting Distance to Lamp	20 ft
Remote Mounting Wire Gauge	18 AWG
Lead Lengths	
Black and White	
Red	
Black/Yellow	

Specifications by lamp and line voltage

Lamp	Specifications by line voltage		
M85		**120**	**277**
70W Ceramic Metal Halide	System Wattage (W)	90	90
	Nominal Current	0.78 A	0.35 A
70W Quartz Metal Halide	Ballast Factor	1	1
	Ballast Efficiency Factor	0.78	0.78
	Max Input Current	2.00 A	0.90 A
	Starting Current	0.60 A	0.27 A
	Open Circuit Voltage	250V	250V
	Drop Out Voltage	66V	222V
	Power Factor (>=)%	90	90
	Min. Starting Temp (°F/°C)	-22 / -30	-22 / -30
	Fuse Rating	6	3
	UL Bench Top Rise		

Safety and performance

cUL Listed UL Listed

63047 – GEM70MVR-F

HID Metal Halide F-Can

1 – 70W M98 120/277 Enclosed and Potted F-Can

- For applications requiring quieter or cooler operation than provided by standard coil and coil ballasts
- Excellent sound-deadening and heat transfer qualities

General characteristics

Ballast Type	Magnetic – F-Can
ANSI Lamp Codes	M98
Voltage	120/277
Line Voltage Regulation (+/-)	5%
Circuit Type	HX-HPF
Insulation Class	90C
Type of Capacitor	
Capacitance	
Voltage (MIN)	
Capacitor Temperature Rating	
Sound Rating	B (25-30 decibels)
Additional Info	Thermally Protected

Electrical characteristics

Supply Current Frequency	60 Hz

Order information

Type	No. Items Per Sales Unit	No. Items Per Standard Package
Standard Pack	1	4

Dimensions

Wiring diagram HID H34 – see example on page 18-67	
Case dimensions – Ref Drawing FCAN1 – see page 18-70	
Length (L)	11.75 in (299 mm)
Width (W)	3.2 in (81 mm)
Height (H)	2.6 in (67 mm)
Mounting dimensions	
Mount Length (M)	11.1 in (283 mm)
Mount Width (X or F)	2.0 in (51 mm)
Mount Slots (MS)	0.2 in (6 mm)
Weight	11.00 lbs
Exit Type	Side
Remote Mounting Distance to Lamp	10 ft
Remote Mounting Wire Gauge	18 AWG
Lead Lengths	
Black and White	12 in (305 mm)
Red	12 in (305 mm)
Black/Yellow	12 in (305 mm)

Specifications by lamp and line voltage

Lamp	Specifications by line voltage		
M98		**120**	**277**
70W Ceramic Metal Halide	System Wattage (W)	82	79
	Nominal Current	0.70 A	0.30 A
70W Quartz Metal Halide	Ballast Factor	1	1
	Ballast Efficiency Factor	0.85	0.88
	Max Input Current	2.00 A	0.90 A
	Starting Current	0.60 A	0.27 A
	Open Circuit Voltage	250V	250V
	Drop Out Voltage	114V	263V
	Power Factor (>=)%	90	90
	Min. Starting Temp (°F/°C)	-22 / -30	-22 / -30
	Fuse Rating	6	3
	UL Bench Top Rise		

Safety and performance

cUL Listed UL Listed

See page E-1 for warranty information.

63048 – GEMH100MVR-F

HID Metal Halide F-Can

1 – 100W M90 120/277 Enclosed and Potted F-Can

- For applications requiring quieter or cooler operation than provided by standard coil and coil ballasts
- Excellent sound-deadening and heat transfer qualities

General characteristics

Ballast Type	Magnetic – F-Can
ANSI Lamp Codes	M90
Voltage	120/277
Line Voltage Regulation (+/-)	5%
Circuit Type	HX-HPF
Insulation Class	90C
Type of Capacitor	
Capacitance	
Voltage (MIN)	
Capacitor Temperature Rating	100°C (212°F)
Sound Rating	B (25-30 decibels)
Additional Info	Thermally Protected

Electrical characteristics

Supply Current Frequency	60 Hz

Order information

Type	No. Items Per Sales Unit	No. Items Per Standard Package
Standard Pack	1	4

Dimensions

Wiring diagram HID H34 – see example on page 18-67	
Case dimensions – Ref Drawing FCAN1 – see page 18-70	
Length (L)	11.75 in (299 mm)
Width (W)	3.2 in (81 mm)
Height (H)	2.6 in (67 mm)
Mounting dimensions	
Mount Length (M)	11.1 in (283 mm)
Mount Width (X or F)	2.0 in (51 mm)
Mount Slots (MS)	0.2 in (6 mm)
Weight	11.00 lbs
Exit Type	Side
Remote Mounting Distance to Lamp	10 ft
Remote Mounting Wire Gauge	18 AWG
Lead Lengths	
Black and White	12 in (305 mm)
Red	12 in (305 mm)
Black/Yellow	12 in (305 mm)

Specifications by lamp and line voltage

Lamp	Specifications by line voltage		
M90		**120**	**277**
100W Ceramic Metal Halide	System Wattage (W)	122	125
	Nominal Current	1.07 A	0.47 A
100W Quartz Metal Halide	Ballast Factor	1	1
	Ballast Efficiency Factor	0.80	0.80
	Max Input Current	1.07 A	0.47 A
	Starting Current	1.10 A	0.50 A
	Open Circuit Voltage	250V	250V
	Drop Out Voltage	96V	222V
	Power Factor (>=)%	90	90
	Min. Starting Temp (°F/°C)	-22 / -30	-22 / -30
	Fuse Rating	8	4
	UL Bench Top Rise		

Safety and performance cUL Listed UL Listed

63049 – GEMH150MVR-F

HID Metal Halide F-Can

1 – 150W MH 120/277 Enclosed and Potted F-Can

- For applications requiring quieter or cooler operation than provided by standard coil and coil ballasts
- Excellent sound-deadening and heat transfer qualities

General characteristics

Ballast Type	Magnetic – F-Can
ANSI Lamp Codes	M102
Voltage	120/277
Line Voltage Regulation (+/-)	5%
Circuit Type	HX-HPF
Insulation Class	90C
Type of Capacitor	
Capacitance	
Voltage (MIN)	
Capacitor Temperature Rating	100°C (212°F)
Sound Rating	B (25-30 decibels)
Additional Info	Thermally Protected

Electrical characteristics

Supply Current Frequency	60 Hz

Order information

Type	No. Items Per Sales Unit	No. Items Per Standard Package
Standard Pack	1	2

Dimensions

Wiring diagram HID H34 – see example on page 18-67	
Case dimensions – Ref Drawing FCAN2 – see page 18-70	
Length (L)	11.8 in (300 mm)
Width (W)	3.2 in (81 mm)
Height (H)	2.8 in (70 mm)
Mounting dimensions	
Mount Length (M)	11.4 in (290 mm)
Mount Width (X or F)	2.0 in (51 mm)
Mount Slots (MS)	0.2 in (6 mm)
Weight	13.00 lbs
Exit Type	Side
Remote Mounting Distance to Lamp	
Remote Mounting Wire Gauge	
Lead Lengths	
Black and White	12 in (305 mm)
Red	12 in (305 mm)
Black/Yellow	12 in (305 mm)

Specifications by lamp and line voltage

Lamp	Specifications by line voltage		
M102		**120**	**277**
175W Ceramic Metal Halide	System Wattage (W)	184	186
	Nominal Current	1.75 a	0.75 A
150W Quartz Metal Halide	Ballast Factor	1	1
	Ballast Efficiency Factor	0.85	0.85
	Max Input Current		
175W Mercury	Starting Current	1.5	.7
	Open Circuit Voltage	260V	260V
	Drop Out Voltage	75V	160V
	Power Factor (>=)%	90	90
	Min. Starting Temp (°F/°C)	-22 / -30	-22 / -30
	Fuse Rating	5	3
	UL Bench Top Rise		

Safety and performance UL Listed CSA

See page E-1 for warranty information.

HID Metal Halide F-Can
HID Electronic and Electromagnetic Ballasts

63050 – GEMH175MVA-F

HID Metal Halide F-Can

1 – 175W M57 120/277 Enclosed and Potted F-Can

- For applications requiring quieter or cooler operation than provided by standard coil and coil ballasts
- Excellent sound-deadening and heat transfer qualities

General characteristics

Ballast Type	Magnetic – F-Can
ANSI Lamp Codes	M57, H39
Voltage	120/277
Line Voltage Regulation (+/-)	5%
Circuit Type	HX-HPF
Insulation Class	90C
Type of Capacitor	
Capacitance	
Voltage (MIN)	
Capacitor Temperature Rating	105°C (221°F)
Sound Rating	B (25-30 decibels)
Additional Info	Thermally Protected

Electrical characteristics

Supply Current Frequency	60 Hz

Order information

Type	No. Items Per Sales Unit	No. Items Per Standard Package
Standard Pack	1	2

Specifications by lamp and line voltage

Lamp	Specifications by line voltage		
M57, H39		**120**	**277**
175W Ceramic Metal Halide	System Wattage (W)	202	205
	Nominal Current	1.75 a	0.75 A
150W Quartz Metal Halide	Ballast Factor	1	1
	Ballast Efficiency Factor	0.85	0.85
175W Mercury	Max Input Current		
	Starting Current		
	Open Circuit Voltage	300V	300V
	Drop Out Voltage	114V	263V
	Power Factor (>=)%	90	90
	Min. Starting Temp (°F/°C)	-22 / -30	-22 / -30
	Fuse Rating	5	3
	UL Bench Top Rise		

Dimensions

Wiring diagram HID H34 – see example on page 18-67	
Case dimensions – Ref Drawing FCAN2 – see page 18-70	
Length (L)	11.8 in (300 mm)
Width (W)	3.2 in (81 mm)
Height (H)	2.6 in (67 mm)
Mounting dimensions	
Mount Length (M)	11.4 in (290 mm)
Mount Width (X or F)	2.0 in (51 mm)
Mount Slots (MS)	0.2 in (6 mm)
Weight	13.00 lbs
Exit Type	Side
Remote Mounting Distance to Lamp	
Remote Mounting Wire Gauge	
Lead Lengths	
Black and White	12 in (305 mm)
Red	12 in (305 mm)
Black/Yellow	12 in (305 mm)

Safety and performance

cUL Listed UL Listed

63051 – GEMH250MVA-F

HID Metal Halide F-Can

1 – 250W M58 120/277 Enclosed and Potted F-Can

- For applications requiring quieter or cooler operation than provided by standard coil and coil ballasts
- Excellent sound-deadening and heat transfer qualities

General characteristics

Ballast Type	Magnetic – F-Can
ANSI Lamp Codes	M58, H37
Voltage	120/277
Line Voltage Regulation (+/-)	5%
Circuit Type	HX-HPF
Insulation Class	90C
Type of Capacitor	
Capacitance	
Voltage (MIN)	
Capacitor Temperature Rating	100°C (212°F)
Sound Rating	C (31-36 decibels)
Additional Info	Thermally Protected

Electrical characteristics

Supply Current Frequency	60 Hz

Order information

Type	No. Items Per Sales Unit	No. Items Per Standard Package
Standard Pack	1	2

Specifications by lamp and line voltage

Lamp	Specifications by line voltage		
M58, H37		**120**	**277**
250W Quartz Metal Halide	System Wattage (W)	319	312
	Nominal Current	2.50 A	1.10 A
175W Quartz Metal Halide	Ballast Factor	1	1
	Ballast Efficiency Factor	0.85	0.85
250W Mercury	Max Input Current		
	Starting Current		
	Open Circuit Voltage	280V	280V
	Drop Out Voltage	96V	222V
	Power Factor (>=)%	90	90
	Min. Starting Temp (°F/°C)	-22 / -30	-22 / -30
	Fuse Rating	8	4
	UL Bench Top Rise		

Dimensions

Wiring diagram HID H34 – see example on page 18-67	
Case dimensions – Ref Drawing FCAN3 – see page 18-70	
Length (L)	16.6 in (422 mm)
Width (W)	3.2 in (81 mm)
Height (H)	2.7 in (70 mm)
Mounting dimensions	
Mount Length (M)	16.1 in (410 mm)
Mount Width (X or F)	2.0 in (51 mm)
Mount Slots (MS)	0.2 in (6 mm)
Weight	17.50 lbs
Exit Type	Side
Remote Mounting Distance to Lamp	
Remote Mounting Wire Gauge	
Lead Lengths	
Black and White	12 in (305 mm)
Red	12 in (305 mm)
Black/Yellow	12 in (305 mm)

Safety and performance

cUL Listed UL Listed

See page E-1 for warranty information.

63052 – GEMH400MVA-F

HID Metal Halide F-Can

1 – 400W M59 120/277 Enclosed and Potted F-Can

- For applications requiring quieter or cooler operation than provided by standard coil and coil ballasts
- Excellent sound-deadening and heat transfer qualities

General characteristics

Ballast Type	Magnetic – F-Can
ANSI Lamp Codes	M59, H33
Voltage	120/277
Line Voltage Regulation (+/-)	5%
Circuit Type	HX-HPF
Insulation Class	90C
Type of Capacitor	
Capacitance	
Voltage (MIN)	
Capacitor Temperature Rating	100°C (212°F)
Sound Rating	C (31-36 decibels)
Additional Info	Thermally Protected

Electrical characteristics

Supply Current Frequency	60 Hz

Order information

Type	No. Items Per Sales Unit	No. Items Per Standard Package
Standard Pack	1	2

Specifications by lamp and line voltage

Lamp	Specifications by line voltage		
M59, H39		**120**	**277**
360W Quartz Metal Halide	System Wattage (W)	445	446
	Nominal Current	3.90 A	1.70 A
400W Quartz Metal Halide	Ballast Factor	1	1
	Ballast Efficiency Factor	0.88	0.88
400W Mercury	Max Input Current	3.90 A	1.70 A
	Starting Current	2.50 A	1.00 A
	Open Circuit Voltage	300V	300V
	Drop Out Voltage	66V	222V
	Power Factor (>=)%	90	90
	Min. Starting Temp (°F/°C)	-22 / -30	-22 / -30
	Fuse Rating	10	5
	UL Bench Top Rise	C	C

Dimensions

Wiring diagram HID H34 – see example on page 18-67	
Case dimensions – Ref Drawing FCAN4 – see page 18-70	
Length (L)	21.6 in (549 mm)
Width (W)	3.2 in (81 mm)
Height (H)	2.6 in (67 mm)
Mounting dimensions	
Mount Length (M)	21.0 in (533 mm)
Mount Width (X or F)	2.0 in (51 mm)
Mount Slots (MS)	0.2 in (6 mm)
Weight	23.00 lbs
Exit Type	Side
Remote Mounting Distance to Lamp	
Remote Mounting Wire Gauge	
Lead Lengths	
Black and White	12 in (305 mm)
Red	12 in (305 mm)
Black/Yellow	12 in (305 mm)

Safety and performance

cUL Listed UL Listed

80728 – 1111-247SCTC000I

HID Metal Halide F-Can

1 – 400W M59 120/277 Enclosed and Potted F-Can
(2 ballasts required to operate one 400W lamp)

- For applications requiring quieter or cooler operation than provided by standard coil and coil ballasts
- Excellent sound-deadening and heat transfer qualities

General characteristics

Ballast Type	Magnetic – F-Can
ANSI Lamp Codes	M59, H33
Voltage	120/277
Line Voltage Regulation (+/-)	10%
Circuit Type	CWA
Insulation Class	90C
Type of Capacitor	
Capacitance	
Voltage (MIN)	
Capacitor Temperature Rating	100°C (212°F)
Sound Rating	C (31-36 decibels)
Additional Info	Thermally Protected

Electrical characteristics

Supply Current Frequency	60 Hz

Order information

Type	No. Items Per Sales Unit	No. Items Per Standard Package
Standard Pack	1	4

Specifications by lamp and line voltage

Lamp	Specifications by line voltage		
M59, H33		**120**	**277**
360W Quartz Metal Halide	System Wattage (W)	460	460
	Nominal Current	3.90 A	1.70 A
400W Quartz Metal Halide	Ballast Factor	1	1
	Ballast Efficiency Factor	0.87	0.87
400W Mercury	Max Input Current		
	Starting Current		
	Open Circuit Voltage	300V	300V
	Drop Out Voltage	96V	222V
	Power Factor (>=)%		
	Min. Starting Temp (°F/°C)	-22 / -30	-22 / -30
	Fuse Rating	10	5
	UL Bench Top Rise		

Dimensions

Wiring diagram HID H36 – see example on page 18-67	
Case dimensions – Ref Drawing FCAN2 – see page 18-70	
Length (L)	14.3 in (364 mm)
Width (W)	3.2 in (81 mm)
Height (H)	2.6 in (67 mm)
Mounting dimensions	
Mount Length (M)	13.8 in (349 mm)
Mount Width (X or F)	2.0 in (51 mm)
Mount Slots (MS)	0.2 in (6 mm)
Weight	14.00 lbs
Exit Type	Side
Remote Mounting Distance to Lamp	
Remote Mounting Wire Gauge	
Lead Lengths	
Black and White	
Red	
Black/Yellow	

Safety and performance

cUL Listed UL Listed

See page E-1 for warranty information.

HID - High Pressure Sodium F-Can
HID Electronic and Electromagnetic Ballasts

86596 – 12210237CTC000I

HID - High Pressure Sodium F-Can

1 – 70W S62 120/277 E & P F-Can built-in starter

- For applications requiring quieter or cooler operation than provided by standard coil & coil ballasts
- Excellent sound-deadening and heat transfer qualities

General characteristics

Ballast Type	Magnetic – F-Can
ANSI Lamp Codes	S62
Voltage	120/277
Line Voltage Regulation (+/-)	5%
Circuit Type	HX-HPF
Insulation Class	90C
Type of Capacitor	
Capacitance	
Voltage (MIN)	
Capacitor Temperature Rating	100°C (212°F)
Sound Rating	
Additional Info	Thermally protected

Electrical characteristics

Supply Current Frequency	60 Hz

Order information

Type	No. Items Per Sales Unit	No. Items Per Standard Package
Standard Pack	1	4

Specifications by lamp & line voltage

Lamp	Specifications by line voltage		
S62		**120**	**277**
70W High Pressure Sodium	System Wattage (W)	98	98
	Nominal Current	0.87 A	0.39 A
	Ballast Factor	1	1
	Ballast Efficiency Factor	0.71	0.71
	Max Input Current	0.87 A	0.39 A
	Starting Current	0.60 A	0.27 A
	Open Circuit Voltage	140V	140V
	Drop Out Voltage	96V	222V
	Power Factor (>=)%	90	90
	Min. Starting Temp (°F/°C)	-22 / -30	-22 / -30
	Fuse Rating	6	3
	UL Bench Top Rise		

Safety and performance

cUL Listed UL Listed

Dimensions

Wiring diagram HID H34 – see example on page 18-67	
Case dimensions – Ref Drawing FCAN1 – see page 18-70	
Length (L)	11.75 in (299 mm)
Width (W)	3.188 in (81 mm)
Height (H)	2.625 in (67 mm)
Mounting dimensions	
Bracket Length (BL)	
Mount Length (M)	11.1 in (283 mm)
Mount Width (X or F)	2.0 in (51 mm)
Mount Slots (MS)	0.2 in (6 mm)
A	
B	
Weight	11.00 lbs
Exit Type	Side
Nominal Length	
Frame Size (H x L)	
Lead lengths	
White	
Black	
Black/Yellow	
Red	

See page E-1 for warranty information.

86605 – 1233142U000I

HID - High Pressure Sodium Reactor

1 – 70W S62 120 Reactor-NPF

- Magnetic ballast construction ideal for a wide variety of lighting applications
- Precision-wound coils, ensuring even heat dissipation and the highest electrical integrity

General characteristics

Ballast Type	Magnetic – Core and Coil
ANSI Lamp Codes	S62
Voltage	120
Line Voltage Regulation (+/-)	5%
Circuit Type	R-HPF R-NPF
Insulation Class	90C
Type of Capacitor	
Capacitance	
Voltage (MIN)	
Capacitor Temperature Rating	100°C (212°F)
Sound Rating	
Additional Info	

Electrical characteristics

Supply Current Frequency	60 Hz

Order information

Type	No. Items Per Sales Unit	No. Items Per Standard Package
Standard Pack	1	6

Specifications by lamp & line voltage

Lamp	Specifications by line voltage		
S62		**120**	**120**
70W High Pressure Sodium	System Wattage (W)	83	83
	Nominal Current	0.75 A	1.60 A
	Ballast Factor	1	1
	Ballast Efficiency Factor	0.84	0.84
	Max Input Current	1.30 A	2.10 A
	Starting Current	0.90 A	2.10 A
	Open Circuit Voltage	120V	120V
	Drop Out Voltage	96V	96V
	Power Factor (>=)%	90	80
	Min. Starting Temp (°F/°C)	-22 / -30	-22 / -30
	Fuse Rating	5	8
	UL Bench Top Rise	A	A

Dimensions

Wiring diagram HID H1a, HID H1 – see example on page 18-67	
Case dimensions – Ref Drawing 1 – see page 18-70	
Length (L)	4.00 in (102 mm)
Width (W)	0.75 in (19 mm)
Height (H)	0.1 in (2.36 mm)
Mounting dimensions	
Bracket Length (BL)	4.00 in (102 mm)
Mount Length (M)	3.30 in (85 mm)
Mount Width (X or F)	
Mount Slots (MS)	0.25 in (6 mm)
A	1.3
B	2.6
Weight	2.50 lbs
Exit Type	Side
Nominal Length	
Frame Size (H x L)	
Lead lengths	
Black	
Blue	
White	

Safety and performance

cUL Listed UL Listed

86606 – 1233154U000I

HID - High Pressure Sodium Reactor

1 – 150W S55 120 Reactor-NPF

- Magnetic ballast construction ideal for a wide variety of lighting applications
- Precision-wound coils, ensuring even heat dissipation and the highest electrical integrity

General characteristics

Ballast Type	Magnetic – Core and Coil
ANSI Lamp Codes	S55
Voltage	120
Line Voltage Regulation (+/-)	5%
Circuit Type	R-NPF
Insulation Class	180C
Type of Capacitor	
Capacitance	52 Mfd
Voltage (MIN)	120
Capacitor Temperature Rating	100°C (212°F)
Sound Rating	
Additional Info	Thermally protected

Electrical characteristics

Supply Current Frequency	60 Hz

Order information

Type	No. Items Per Sales Unit	No. Items Per Standard Package
Standard Pack	1	6

Specifications by lamp & line voltage

Lamp	Specifications by line voltage		
S55		**120**	**120**
150W High Pressure Sodium	System Wattage (W)	171	171
	Nominal Current	1.50 A	3.20 A
250W Quartz Metal Halide	Ballast Factor	1	1
	Ballast Efficiency Factor	1.46	1.46
	Max Input Current	2.40 A	4.40 A
	Starting Current	2.20 A	4.40 A
	Open Circuit Voltage	120V	120V
	Drop Out Voltage	96V	96V
	Power Factor (>=)%	90	80
	Min. Starting Temp (°F/°C)	-22 / -30	-22 / -30
	Fuse Rating	8	15
	UL Bench Top Rise	A	A

Dimensions

Wiring diagram HID H1 – see example on page 18-67	
Case dimensions – Ref Drawing 1 – see page 18-70	
Length (L)	4.00 in (102 mm)
Width (W)	0.75 in (19 mm)
Height (H)	0.1 in (2.36 mm)
Mounting dimensions	
Bracket Length (BL)	4.00 in (102 mm)
Mount Length (M)	3.30 in (85 mm)
Mount Width (X or F)	
Mount Slots (MS)	0.25 in (6 mm)
A	2.0
B	3.0
Weight	3.50 lbs
Exit Type	Side
Nominal Length	
Frame Size (H x L)	2.813 in x 3.939 in
Lead lengths	
Black	
Blue	
White	

Safety and performance

cUL Listed UL Listed

HID Accessories and Replacement Capacitors
HID Electronic and Electromagnetic Ballasts

HID Accessories

HID Accessories	Prod Code	Description	Application	Units Per Carton
Replacement Ignitors for Pulse Start Lamps (MH & HPS)	75440	MH100-3A MH350-1A	Ignitor for MH 30 50 70 100 Ignitor MH 150W, PS 175 250 320 350 400W	20
	75441	MH750-1B	Ignitor MH PS 750W	
	86635	HPS150-3A	Ignitor HPS 150 watts or less except 150w-S56	20
	86641	HPS400-3A	Ignitor HPS 200-400 watts & 150w S56	10
	75439	HPS1000-4B	Ignitor HPS 1000W, PS 1000W	
Other Accessories	47621	000-8724	HIDP Adjustable Mounting Bracket Hardware Kit	100

Ignitor Specifications

Ballast Product Code	86635	86641	75439	75440	75441
Ignitor Model No.	HPS150-3A	HPS400-3A	HPS1000-4B	MH350-1A	MH750-1B
Description	Ignitor HPS 150 watts or less except 150w-S56	Ignitor HPS 200-400 watts & 150w S56	Ignitor HPS 1000W, PS 1000W	Ignitor MH 150W, PS 175 250 320 350 400W	Ignitor MH PS 750W
Minimum Starting Voltage (V)	95	105	175	203	210
Pulse Height (kV)	2.5-4.0	2.5-4.0	3.0-5.0	3.0-4.0	3.0-4.0
Pulse Width (µs)	> 1.0	> 1.0	> 4.0	> 1.0	> 1.5
Pulse Frequency (Hz)	> 100	> 100	> 100	> 100	> 100
Ballast To Lamp Distance	10FT	10FT	5FT	5FT	5FT
Maximum Case Temperature	105°C	105°C	105°C	105°C	105°C
Starting Current (rms) Min	0.83	4.6	4.7	0.68	4.5
Starting Current (rms) Max	1.25	7.5	8	1.1	5.8
Diameter	1.40"	1.40"	1.70"	1.40"	2 5/32" x 15/16" (oval)
Height	2.55"	2.55"	2.80"	2.55"	3.0"

Replacement Capacitors

Prod Code	Description	Application	Capacity (uF)	VAC	Diameter (inches)	Case Ht. (inches)	Units Per Carton
75433	005-1184-MF	10.0 MFD 400V 90C 2.4 MEG 1.50 oval 2.7 ht					20
75668	005-2779-MF	24.0 MFD 480V 90C 1.75 oval 3.9 ht					20
75429	GECAP-5/300V-D	Capacitor 5MFD 280V Dry	5	300	1.2	1.97	20
75425	GECAP-6/280V-D	Capacitor 6MFD 280V Dry	6	300	1.2	2.76	20
75430	GECAP-7/300V-D	Capacitor 7MFD 300V Dry	7	300	1.2	2.76	20
75426	GECAP-8/280V-D	Capacitor 8MFD 280V Dry	8	300	1.2	2.76	20
75433	GECAP-10/400V-O	Capacitor 10MFD 400V Oil	10	400	1.75	2.38	20
75427	GECAP-12/280V-D	Capacitor 12MFD 280V Dry	12	300	1.2	3.15	20
75669	GECAP-14/280V-D	Capacitor 14MFD 280V Dry	14	300	1.4	2.76	20
75434	GECAP-15/400V-O	Capacitor 15MFD 400V Oil	15	400	1.75	2.88	20
75428	GECAP-16/280V-D	Capacitor 16MFD 280V Dry	16	300	1.4	3.15	20
75431	GECAP-21/345V-O	Capacitor 21MFD 345V Oil	21	345	1.75	3.13	20
75432	GECAP-22.5/345V-O	Capacitor 22.5MFD 345V Oil	22.5	345	1.75	3.75	20
75435	GECAP-24/400V-O	Capacitor 24MFD 400V Oil	24	400	1.75	3.75	20
75668	GECAP-24/480V-O	Capacitor 24MFD 480V Oil	24	480	2	3.91	20
75437	GECAP-26/525V-O	Capacitor 26MFD 525V Oil	26	525	2	3.91	20
75436	GECAP-28/400V-O	Capacitor 28MFD 400V Oil	28	400	1.75	3.88	20
75438	GECAP-32/525V-O	Capacitor 32MFD 525V Oil	32	525	2	3.91	20
75422	GECAP-35/240V-D	Capacitor 35MFD 240V Dry	35	240	1.5	3.75	20
75423	GECAP-55/240V-D	Capacitor 55MFD 240V Dry	55	240	1.5	3.75	20

See page E-1 for warranty information.

Capacitors and Ignitors

						Kit Capacitor				Replacement Capacitor				Replacement Ignitor	
Lamp Type	Use with ANSI Lamp Types	Watts	Prod Code	New GE Description	Description	Cap.	uF	Min Vac	UL Min Vac	Prod Code	Desc.	Actual electrial voltage of capacitor both ends	Original	Prod Code	Ignitor
Metal Halide	M110	50	86824	GEM50MLTLC3D-5	1- 50w MH M110 or M148 Quad (120/208/240/277V)	6MFD 280V	6	280	280	75425	GECAP-6/280V-D		GECAP-6/280V-D	75440	MH350-1A
	M148	50	86824	GEM50MLTLC3D-5	1- 50w MH M110 or M148 Quad (120/208/240/277V)	6MFD 280V	6	280	280	75425	GECAP-6/280V-D		GECAP-6/280V-D	75440	MH350-1A
	M143	70	86839	GEM7048TLC3D-5	1- 70w MH M 98 or M143 480	8MFD 280V	8	280	280	75426	GECAP-8/280V-D		GECAP-8/280V-D	75440	MH350-1A
	M143	70	86847	GEM70MLTLC3D-5	1- 70w MH M 98 or M143 Quad (120/208/240/277V)	8MFD 280V	8	280	280	75426	GECAP-8/280V-D		GECAP-8/280V-D	75440	MH350-1A
	M143	70	78517	GEM70TRILC3-5	1- 70w MH M 98 or M143 Quad (120/208/240/277V)	8MFD 300V	8	300	280	75426	GECAP-8/280V-D	277V	GECAP-8/280V-D	75440	MH350-1A
	M85	70	86576	11210277CTC000C	1- 70w M85 120/277 Enclosed & Potted	Internal									
	M98	70	86578	11210506CTC000C	1- 70w M98 120/277 Enclosed & Potted	Internal									
	M98	70	86839	GEM7048TLC3D-5	1- 70w MH M 98 or M143 480	8MFD 280V	8	280	280	75426	GECAP-8/280V-D		GECAP-8/280V-D	75440	MH350-1A
	M98	70	86847	GEM70MLTLC3D-5	1- 70w MH M 98 or M143 Quad (120/208/240/277V)	8MFD 280V	8	280	280	75426	GECAP-8/280V-D		GECAP-8/280V-D	75440	MH350-1A
	M140	100	86667	GEM10048TLC3D-5	1- 100w MH M 90 or M140 480	12MFD 280V	12	280	280	75427	GECAP-12/280V-D		GECAP-12/280V-D	75440	MH350-1A
	M140	100	86675	GEM100MLTLC3D-5	1- 100w MH M 90 or M140 Quad (120/208/240/277V)	12MFD 280V	12	280	280	75427	GECAP-12/280V-D		GECAP-12/280V-D	75440	MH350-1A
	M140	100	78519	GEM100TRILC3-5	1- 100w MH M 90 or M140 Quad (120/208/240/277V)	12MFD 300V	12	300	280	75427	GECAP-12/280V-D	277V	GECAP-12/280V-D	75440	MH350-1A
	M90	100	86574	11210239CTC000I	1- 100w M90 120/277 Enclosed & Potted	Internal									
	M90	100	86667	GEM10048TLC3D-5	1- 100w MH M 90 or M140 480	12MFD 280V	12	280	280	75427	GECAP-12/280V-D		GECAP-12/280V-D	75440	MH350-1A
	M90	100	86675	GEM100MLTLC3D-5	1- 100w MH M 90 or M140 Quad (120/208/240/277V)	12MFD 280V	12	280	280	75427	GECAP-12/280V-D		GECAP-12/280V-D	75440	MH350-1A
	M92	100	86667	GEM10048TLC3D-5	1- 100w MH M 90 or M140 480	12MFD 280V	12	280	280	75427	GECAP-12/280V-D		GECAP-12/280V-D	75440	MH350-1A
	M92	100	86675	GEM100MLTLC3D-5	1- 100w MH M 90 or M140 Quad (120/208/240/277V)	12MFD 280V	12	280	280	75427	GECAP-12/280V-D		GECAP-12/280V-D	75440	MH350-1A
	M102	150	86711	GEM15048TLC3D-5	1- 150w MH M102 or M142 480	16MFD 280V	16	280	280	75428	GECAP-16/280V-D		GECAP-16/280V-D	75440	MH350-1A
	M102	150	86718	GEM150MLTLC3D-5	1- 150w MH M102 or M142 Quad (120/208/240/277V)	16MFD 280V	16	280	280	75428	GECAP-16/280V-D		GECAP-16/280V-D	75440	MH350-1A
	M102	150	78520	GEM150TRILC3-5	1- 150w MH M102 or M142 Quad (120/208/240/277V)	16MFD 300V	16	300	280	75428	GECAP-16/280V-D	277V	GECAP-16/280V-D	75440	MH350-1A
	M107	150	86711	GEM15048TLC3D-5	1- 150w MH M102 or M142 480	16MFD 280V	16	280	280	75428	GECAP-16/280V-D		GECAP-16/280V-D	75440	MH350-1A
	M107	150	86718	GEM150MLTLC3D-5	1- 150w MH M102 or M142 Quad (120/208/240/277V)	16MFD 280V	16	280	280	75428	GECAP-16/280V-D		GECAP-16/280V-D	75440	MH350-1A
	M142	150	86711	GEM15048TLC3D-5	1- 150w MH M102 or M142 480	16MFD 280V	16	280	280	75428	GECAP-16/280V-D		GECAP-16/280V-D	75440	MH350-1A
	M142	150	86718	GEM150MLTLC3D-5	1- 150w MH M102 or M142 Quad (120/208/240/277V)	16MFD 280V	16	280	280	75428	GECAP-16/280V-D		GECAP-16/280V-D	75440	MH350-1A
	M57	175	86563	1110245SCTC000I	1- 175w M57 120/277 Enclosed & Potted	Internal									
	M57	175	87210	GEM175ML5AC3-5	1- 175w MH M 57 or H 39 5-Tap (120/208/240/277/480V)	10MFD 400V	10	400	400	75433	GECAP-10/400V-O		005-1184-MF		N/A
	M57	175	86741	GEM175MLTAC3-5	1- 175w MH M 57 or H 39 Quad (120/208/240/277V)	10MFD 400V	10	400	400	75433	GECAP-10/400V-O		005-1184-MF		N/A
	M57	175	78521	GEM175TRIAC3-5	1- 175w MH M 57 or H 39 Quad (120/208/240/277V)	12MFD 450V	12	450	400	75433		370V	005-1184-MF		N/A
	M58	250	86564	1110246CTC000C	1- 250w M58 120/277 Enclosed & Potted	Internal									

See page E-1 for warranty information.

HID Accessories and Replacement Capacitors
HID Electronic and Electromagnetic Ballasts

						Kit Capacitor				Replacement Capacitor				Replacement Ignitor	
Lamp Type	Use with ANSI Lamp Types	Watts	Prod Code	New GE Description	Description	Cap.	uF	Min Vac	UL Min Vac	Prod Code	Desc.	Actual electrial voltage of capacitor both ends	Original	Prod Code	Ignitor
Metal Halide	M58	250	87211	GEM250ML5AC3-5	1- 250w MH M 58 or H 37 5-Tap (120/208/240/277/480V)	15MFD 400V	15	400	400	75434	GECAP-15/400V-O		005-1185-MF		N/A
	M58	250	87212	GEM250ML5AC4-5	1- 250w MH M 58 or H 37 5-Tap (120/208/240/277/480V)	15MFD 400V	15	400	400	75434	GECAP-15/400V-O		005-1185-MF		N/A
	M58	250	86765	GEM250MLTAC3-5	1- 250w MH M 58 or H 37 Quad (120/208/240/277V)	15MFD 400V	15	400	400	75434	GECAP-15/400V-O		005-1185-MF		N/A
	M58	250	78522	GEM250TRIAC4-5	1- 250w MH M 58 or H 37 Quad (120/208/240/277V)	15MFD 450V	15	450	400	75434	GECAP-15/400V-O	370V	005-1185-MF		N/A
	M59	400	42670	1110-247SC-TC	1- 400w M59 120/277 Enclosed & Potted F-can	Internal									
	M59	400	80728	1111-247SCTC000I	1- 400w M59 120/277 Enclosed & Potted	Internal									
	M59	400	86803	GEM40048TAC4-5	1- 400w MH M 59 or H 33 480	24MFD 400V	24	400	400	75435	GECAP-24/400V-O		005-2779-MF		N/A
	M59	400	72300	GEM400ML5AA4-5	1- 400w MH M59 or H33 5-Tap (120/208/240/277/480V) Al C&C	24MFD 400V	24	400	360	75435	GECAP-24/400V-O		005-2779-MF		N/A
	M59	400	72149	GEM400MLTAA4-5	1- 400w MH M 59 or H 33 Quad (120/208/240/277V) Al C&C	24MFD 400V	24	400	400	75435	GECAP-24/400V-O		005-2779-MF		N/A
	M59	400	78523	GEM400TRIAC4-5	1- 400w MH M 59 or H 33 Quad (120/208/240/277V) Al C&C	24MFD 450V	24	450	400	75668	GECAP-24/480V-O	370V	005-2779-MF		N/A
	M47	1000	86650	GEM100048TAC5-5	1- 1000w MH M 47 or H 36 480	24MFD 480V	24	480	480	75668	GECAP-24/480V-O		005-2779-MF		N/A
	M47	1000	87213	GEM1000ML5AA5-5	1- 1000w MH M 47 or H 36 5-Tap (120/208/240/277/480V)	24MFD 480V	24	480	480	75668	GECAP-24/480V-O		005-2779-MF		N/A
	M47	1000	86655	GEM1000MLTAA5-5	1- 1000w MH M 47 or H 36 Quad (120/208/240/277V)	24MFD 480V	24	480	480	75668	GECAP-24/480V-O		005-2779-MF		N/A
	M47	1000	78524	GEM1000TRIAC5-5	1- 1000w MH M 47 or H 36 Quad (120/208/240/277V)	24MFD 540V	24	540	480	75668	GECAP-24/480V-O	450V	005-2779-MF		N/A
	M48	1500	86693	GEM150048TAC5-5	1- 1500w MH M 48 480	32MFD 525V	32	525	525	75438	GECAP-32/525V-O		GECAP-32/525V-O		N/A
	M48	1500	86698	GEM1500MLTAC5-5	1- 1500w MH M 48 Quad (120/208/240/277V)	32MFD 525V	32	525	525	75438	GECAP-32/525V-O		GECAP-32/525V-O		N/A
Pulse Start	M156	20	87490	GEMH20-MLF-120	1 - 20W M156 120V Electronic HID	Internal									Internal
	M130	39	87501	GEMH39-MSF-120	1 - 39W M130 120V Electronic HID	Internal									Internal
	C148	50	87516	GEMH50-MSF-120	1 - 50W M110 M/C148 120V Electronic HID	Internal									Internal
	M110	50	87516	GEMH50-MSF-120	1 - 50W M110 M/C148 120V Electronic HID	Internal									Internal
	M148	50	87516	GEMH50-MSF-120	1 - 50W M110 M/C148 120V Electronic HID	Internal									Internal
	C143	70	87531	GEMH70-MSF-120	1 - 70W M98 M/C143 120V Electronic HID	Internal									Internal
	C143	70	87546	GEMH70-SLJ-MV	1 - 70W M98 M/C143 120V-277V Electronic HID	Internal									Internal
	M139	70	87531	GEMH70-MSF-120	1 - 70W M98 M/C143 120V Electronic HID	Internal									Internal
	M139	70	87531	GEMH70-MSF-120	1 - 70W M98 M/C143 120V Electronic HID	Internal									Internal
	M143	70	87531	GEMH70-MSF-120	1 - 70W M98 M/C143 120V Electronic HID	Internal									Internal
	M143	70	87546	GEMH70-SLJ-MV	1 - 70W M98 M/C143 120V-277V Electronic HID	Internal									Internal
	M98	70	87531	GEMH70-MSF-120	1 - 70W M98 M/C143 120V Electronic HID	Internal									Internal
	M98	70	87546	GEMH70-SLJ-MV	1 - 70W M98 M/C143 120V-277V Electronic HID	Internal									Internal
	C140	100	87561	GEMH100-SLJ-MV	1 - 100W M90 M/C140 120V-277V Electronic HID	Internal									Internal
	M140	100	87561	GEMH100-SLJ-MV	1 - 100W M90 M/C140 120V-277V Electronic HID	Internal									Internal

See page E-1 for warranty information.

HID Accessories and Replacement Capacitors
HID Electronic and Electromagnetic Ballasts

						Kit Capacitor				Replacement Capacitor				Replacement Ignitor	
Lamp Type	Use with ANSI Lamp Types	Watts	Prod Code	New GE Description	Description	Cap.	uF	Min Vac	UL Min Vac	Prod Code	Desc.	Actual electrial voltage of capacitor both ends	Original	Prod Code	Ignitor
Pulse Start	M90	100	87561	GEMH100-SLJ-MV	1 - 100W M90 M/C140 120V-277V Electronic HID	Internal									Internal
	C142	150	87576	GEMH150-SLJ-MV	1 - 150W M102 M/C142 120V-277V Electronic HID	Internal									Internal
	M102	150	87576	GEMH150-SLJ-MV	1 - 150W M102 M/C142 120V-277V Electronic HID	Internal									Internal
	M142	150	87576	GEMH150-SLJ-MV	1 - 150W M102 M/C142 120V-277V Electronic HID	Internal									Internal
	M137	175	86876	GEP17548TAC3-5	1- 175w PS M137 or M152 480	10MFD 400V	10	400	400	75433	GECAP-10/400V-O		005-1184-MF	75440	MH350-1A
	M137	175	86885	GEP175MLTAC3-5	1- 175w PS M137 or M 152 Quad (120/208/240/277V)	10MFD 400V	10	400	400	75433	GECAP-10/400V-O		005-1184-MF	75440	MH350-1A
	M152	175	86876	GEP17548TAC3-5	1- 175w PS M137 or M152 480	10MFD 400V	10	400	400	75433	GECAP-10/400V-O		005-1184-MF	75440	MH350-1A
	M152	175	86885	GEP175MLTAC3-5	1- 175w PS M137 or M 152 Quad (120/208/240/277V)	10MFD 400V	10	400	400	75433	GECAP-10/400V-O		005-1184-MF	75440	MH350-1A
	M152	175	78525	GEP175TRIAC3-5	1- 175w PS M137 or M 152 Quad (120/208/240/277V)	12MFD 450V	12	450	400	75433		330V	005-1184-MF	75440	MH350-1A
	M136	250	78526	GEP200TRIAC3-5	1- 250w PS M138 or M153 Quad (120/208/240/277V)	16MFD 450V	16	450	400				005-1185-MF	75440	MH350-1A
	CMH250	250	29377	GE-MH-250-400-MA	1 - 250 to 400W UltraMax HID Electronic 208-277 50-60Hz	Internal									Internal
	CMH250	250	89646	GEMH250-400MV50	1 - 250 to 400W UltraMax HID Dimming 208-277 50-60Hz	Internal									Internal
	M138	250	86926	GEP25048TAC4-5	1- 250w PS M138 or M153 480	15MFD 400V	15	400	400	75434	GECAP-15/400V-O		005-1185-MF	75440	MH350-1A
	M138	250	86935	GEP250MLTAC4-5	1- 250w PS M138 or M153 Quad (120/208/240/277V)	15MFD 400V	15	400	400	75434	GECAP-15/400V-O		005-1185-MF	75440	MH350-1A
	M138	250	78527	GEP250TRIAC4-5	1- 250w PS M138 or M153 Quad (120/208/240/277V)	15MFD 450V	15	450	400	75434	GECAP-15/400V-O	370V	005-1185-MF	75440	MH350-1A
	M153	250	29377	GE-MH-250-400-MA	1 - 250 to 400W UltraMax HID Electronic 208-277 50-60Hz	Internal									Internal
	M153	250	89646	GEMH250-400MV50	1 - 250 to 400W UltraMax HID Dimming 208-277 50-60Hz	Internal									Internal
	M153	250	86926	GEP25048TAC4-5	1- 250w PS M138 or M153 480	15MFD 400V	15	400	400	75434	GECAP-15/400V-O		005-1185-MF		
	M153	250	86935	GEP250MLTAC4-5	1- 250w PS M138 or M153 Quad (120/208/240/277V)	15MFD 400V	15	400	400	75434	GECAP-15/400V-O		005-1185-MF	75440	MH350-1A
	CMH320	320	29377	GE-MH-250-400-MA	1 - 250 to 400W UltraMax HID Electronic 208-277 50-60Hz	Internal									Internal
	CMH320	320	89646	GEMH250-400MV50	1 - 250 to 400W UltraMax HID Dimming 208-277 50-60Hz	Internal									Internal
	M132	320	29377	GE-MH-250-400-MA	1 - 250 to 400W UltraMax HID Electronic 208-277 50-60Hz	Internal									Internal
	M132	320	89646	GEMH250-400MV50	1 - 250 to 400W UltraMax HID Dimming 208-277 50-60Hz	Internal									Internal
	M132	320	86952	GEP32048TAC4-5	1- 320w PS M132 or M154 480	21MFD 345V	21	345	345	75431	GECAP-21/345V-O		GECAP-21/345V-O	75440	MH350-1A
	M132	320	86959	GEP320MLTAC4-5	1- 320w PS M132 or 154 Quad (120/208/240/277V)	21MFD 345V	21	345	345	75431	GECAP-21/345V-O		GECAP-21/345V-O	75440	MH350-1A
	M132	320	78528	GEP320TRIAC4-5	1- 320w PS M132 or M154 TRI-Voltage 120 277 347	21MFD 450V	21	450		75431	GECAP-21/345V-O	360V		75440	MH350-1A
	M154	320	29377	GE-MH-250-400-MA	1 - 250 to 400W UltraMax HID Electronic 208-277 50-60Hz	Internal									Internal
	M154	320	89646	GEMH250-400MV50	1 - 250 to 400W UltraMax HID Dimming 208-277 50-60Hz	Internal									Internal
	M154	320	86952	GEP32048TAC4-5	1- 320w PS M132 or M154 480	21MFD 345V	21	345	345	75431	GECAP-21/345V-O		GECAP-21/345V-O	75440	MH350-1A
	M154	320	86959	GEP320MLTAC4-5	1- 320w PS M132 or M154 Quad (120/208/240/277V)	21MFD 345V	21	345	345	75431	GECAP-21/345V-O		GECAP-21/345V-O	75440	MH350-1A

See page E-1 for warranty information.

HID Accessories and Replacement Capacitors
HID Electronic and Electromagnetic Ballasts

						Kit Capacitor				Replacement Capacitor				Replacement Ignitor	
Lamp Type	Use with ANSI Lamp Types	Watts	Prod Code	New GE Description	Description	Cap.	uF	Min Vac	UL Min Vac	Prod Code	Desc.	Actual electrial voltage of capacitor both ends	Original	Prod Code	Ignitor
	M154	320	86968	GEP320TRIAC4-5	1- 320w PS M132 or M154 TRI-Voltage 120 277 347	21MFD 345V	21	345		75431	GECAP-21/345V-O		GECAP-21/345V-O	75440	MH350-1A
	CMH350	350	29377	GE-MH-250-400-MA	1 - 250 to 400W UltraMax HID Electronic 208-277 50-60Hz	Internal									Internal
	CMH350	350	89646	GEMH250-400MV50	1 - 250 to 400W UltraMax HID Dimming 208-277 50-60Hz	Internal									Internal
	M131	350	29377	GE-MH-250-400-MA	1 - 250 to 400W UltraMax HID Electronic 208-277 50-60Hz	Internal									Internal
	M131	350	89646	GEMH250-400MV50	1 - 250 to 400W UltraMax HID Dimming 208-277 50-60Hz	Internal									Internal
	M131	350	42692	GEP350277RCE-5	1- 350w PS M131 277 Reactor	22.5MFD 345V	22.5	345		75432	GECAP-225/345V-O		GECAP-22.5/345V-O	75440	MH350-1A
	M131	350	86984	GEP350MLTAC4-5	1- 350w PS M131 Quad (120/208/240/277V)	22.5MFD 345V	22.5	345	345	75432	GECAP-225/345V-O		GECAP-22.5/345V-O	75440	MH350-1A
	M131	350	78529	GEP350TRIAC4-5	1- 350w PS M131 Quad (120/208/240/277V)	22MFD 450V	22	450	345	75432		360V	GECAP-22.5/345V-O	75440	MH350-1A
	CMH400	400	29377	GE-MH-250-400-MA	1 - 250 to 400W UltraMax HID Electronic 208-277 50-60Hz	Internal									Internal
	CMH400	400	89646	GEMH250-400MV50	1 - 250 to 400W UltraMax HID Dimming 208-277 50-60Hz	Internal									Internal
	M135	400	29377	GE-MH-250-400-MA	1 - 250 to 400W UltraMax HID Electronic 208-277 50-60Hz	Internal									Internal
	M135	400	89646	GEMH250-400MV50	1 - 250 to 400W UltraMax HID Dimming 208-277 50-60Hz	Internal									Internal
	M135	400	86999	GEP40048TAC4-5	1- 400w PS M135 or M155 480	24MFD 400V	24	400	400	75435	GECAP-24/400V-O		005-2779-MF	75440	MH350-1A
	M135	400	87008	GEP400MLTAC4-5	1- 400w PS M135 or M155 Quad (120/208/240/277V)	24MFD 400V	24	400	400	75435	GECAP-24/400V-O		005-2779-MF	75440	MH350-1A
	M135	400	78530	GEP400TRIAC4-5	1- 400w PS M135 or M155 Quad (120/208/240/277V)	26MFD 450V	26	450	400	75437	GECAP-26/525V-O	360V	005-2779-MF	75440	MH350-1A
	M155	400	29377	GE-MH-250-400-MA	1 - 250 to 400W UltraMax HID Electronic 208-277 50-60Hz	Internal									Internal
	M155	400	89646	GEMH250-400MV50	1 - 250 to 400W UltraMax HID Dimming 208-277 50-60Hz	Internal									Internal
	M155	400	87008	GEP400MLTAC4-5	1- 400w PS M135 or M155 Quad (120/208/240/277V)	24MFD 400V	24	400	400	75435	GECAP-24/400V-O		005-2779-MF	75440	MH350-1A
	M155	400	86999	GEP40048TAC4-5	1- 400w PS M135 or M155 480	24MFD 400V	24	400	400	75435	GECAP-24/400V-O		005-2779-MF	75440	MH350-1A
	M149	750	46936	GEP75048TAC5-5	1-750w PS M149 480	28MFD 400V	28	400	400	75436	GECAP-28/400V-O		GECAP-28/400V-O	75441	MH750-1B
	M149	750	46934	GEP750MLTAC5-5	1-750w PS M149 Quad (120/208/240/277V)	28MFD 400V	28	400	400	75436	GECAP-28/400V-O		GECAP-28/400V-O	75441	MH750-1B
	M149	750	78531	GEP750TRIAC5-5	1-750w PS M149 Quad (120/208/240/277V)	28MFD 450V	28	450	400	75436	GECAP-28/400V-O	405V	GECAP-28/400V-O	75441	MH750-1B
	M141	1000	72282	GEP1000ML5AC5-5	1-1000w PS M141 5-Tap (120/208/240/277/480V)	24MFD 480V	24	480	480	75668	GECAP-24/480V-O		005-2779-MF	75439	HPS1000-4B
	M141	1000	72281	GEP1000MLTAC5-5	1-1000w PS M141 Quad (120/208/240/277V)	24MFD 480V	24	480	480	75668	GECAP-24/480V-O		005-2779-MF	75439	HPS1000-4B
	M141	1000	78532	GEP1000TRIAC5-5	1-1000w PS M141 Quad (120/208/240/277V)	25MFD 450V	25	450	480	75668		430V	005-2779-MF	75439	HPS1000-4B
High Pressure Sodium	S68	50	87152	GES50MLTLC3D-5	1- 50w HPS S68 Quad (120/208/240/277V)	5MFD 280V	5	300	300	75429	GECAP-5/300V-D		GECAP-5/300V-D	86635	HPS150-3A
	S62	70	86596	12210237CTC000I	1- 70w S62 120/277 E & P F-can built-in starter	Internal									Internal
	S62	70	86605	1233142U000I	1- 70w S62 120 Reactor-NPF	Internal									Internal
	S68	70	78533	GES50TRILC3-5	1- 70w HPS S62 Quad (120/208/240/277V)	5MFD 300V	5	300	300	75430		277V	GECAP-7/300V-D	86635	HPS150-3A
	S62	70	86456	GES7048TLC3D-5	1- 70w HPS S62 480V	7MFD 300V	7	300	300	75430	GECAP-7/300V-D		GECAP-7/300V-D	86635	HPS150-3A

See page E-1 for warranty information.

HID Accessories and Replacement Capacitors
HID Electronic and Electromagnetic Ballasts

						Kit Capacitor				Replacement Capacitor				Replacement Ignitor	
Lamp Type	Use with ANSI Lamp Types	Watts	Prod Code	New GE Description	Description	Cap.	uF	Min Vac	UL Min Vac	Prod Code	Desc.	Actual electrial voltage of capacitor both ends	Original	Prod Code	Ignitor
High Pressure Sodium	S62	70	86587	GES70MLTLC3D-5	1- 70w HPS S62 Quad (120/208/240/277V)	7MFD 300V	7	300	300	75430	GECAP-7/300V-D		GECAP-7/300V-D	86635	HPS150-3A
	S62	70	78534	GES70TRILC3-5	1- 70w HPS S62 Quad (120/208/240/277V)	7MFD 300V	7	300	300	75430	GECAP-7/300V-D		GECAP-7/300V-D	86635	HPS150-3A
	S54	100	87068	GES10048TLC3D-5	1- 100w HPS S54 480V	10MFD 280V	10	280	280	75433	GECAP-10/400V-O		005-1184-MF	86635	HPS150-3A
	S54	100	87074	GES100MLTLC3D-5	1- 100w HPS S54 Quad (120/208/240/277V)	10MFD 280V	10	280	280	75433	GECAP-10/400V-O		005-1184-MF	86635	HPS150-3A
	S54	100	78535	GES100TRILC3-5/2	1- 100w HPS S54 Quad (120/208/240/277V)	10MFD 300V	10	300	280	75433	GECAP-10/400V-O	277V	005-1184-MF	86635	HPS150-3A
	S55	150	86606	1233154U000I	1- 150w S55 120 Reactor-NPF	Internal									Internal
	S55	150	87087	GES15048TLC3D-5	1- 150w HPS S55 480V	14MFD 280V	14	280	280	75669	GECAP-14/280V-D		GECAP-14/280V-D	86635	HPS150-3A
	S55	150	87094	GES150MLTLC3D-5	1- 150w HPS S55 Quad (120/208/240/277V)	14MFD 280V	14	280	280	75669	GECAP-14/280V-D		GECAP-14/280V-D	86635	HPS150-3A
	S55	150	78536	GES150TRILC3-5	1- 150w HPS S55 Quad (120/208/240/277V)	14MFD 300V	14	300	280	75669	GECAP-14/280V-D	277V	GECAP-14/280V-D	86635	HPS150-3A
	S50	250	87214	GES250ML5AC4-5	1- 250w HPS S50 5-Tap (120/208/240/277/480V)	35MFD 240V	35	240	240	75422	GECAP-35/240V-O		GECAP-35/240V-O	86641	HPS400-3A
	S50	250	87121	GES250MLTAC4-5	1- 250w HPS S50 Quad (120/208/240/277V)	35MFD 240V	35	240	240	75422	GECAP-35/240V-O		GECAP-35/240V-O	86641	HPS400-3A
	S50	250	78537	GES250TRIAC4-5	1- 250w HPS S50 Quad (120/208/240/277V)	33MFD 300V	33	300	240	75422		240	GECAP-35/240V-O	86641	HPS400-3A
	S51	400	87198	GES40048TAC4-5	1- 400w HPS S51 480V in smaller frame	55MFD 240V	55	240	240	75423	GECAP-55/240V-O		GECAP-55/240V-O	86641	HPS400-3A
	S51	400	87215	GES400ML5AC4-5	1- 400w HPS S51 5-Tap (120/208/240/277/480V)	55MFD 240V	55	240	240	75423	GECAP-55/240V-O		GECAP-55/240V-O	86641	HPS400-3A
	S51	400	87164	GES400MLTAC4-5	1- 400w HPS S51 Quad (120/208/240/277V)	55MFD 240V	55	240	240	75423	GECAP-55/240V-O		GECAP-55/240V-O	86641	HPS400-3A
	S51	400	78539	GES400TRIAC4-5	1- 400w HPS S51 Quad (120/208/240/277V)	55MFD 300V	55	300	240	75423	GECAP-55/240V-O	240	GECAP-55/240V-O	86641	HPS400-3A
	S52	1000	87048	GES100048TAC5-5	1- 1000w HPS S52 480V	26MFD 525V	26	525	525	75437	GECAP-26/525V-O		GECAP-26/525V-O	75439	HPS1000-4B
	S52	1000	87218	GES1000ML5AC5-5	1- 1000w HPS S52 5-Tap (120/208/240/277/480V)	26MFD 525V	26	525	525	75437	GECAP-26/525V-O		GECAP-26/525V-O	75439	HPS1000-4B
	S52	1000	87056	GES1000MLTAC5-5	1- 1000w HPS S52 Quad (120/208/240/277V)	26MFD 525V	26	525	525	75437	GECAP-26/525V-O		GECAP-26/525V-O	75439	HPS1000-4B
	S52	1000	78540	GES1000TRIAC5-5	1- 1000w HPS S52 Quad (120/208/240/277V)	26MFD 540V	26	540	525	75437	GECAP-26/525V-O	520	GECAP-26/525V-O	75439	HPS1000-4B
Mercury	H39	175	87210	GEM175ML5AC3-5	1- 175w MH M 57 or H 39 5-Tap (120/208/240/277/480V)	10MFD 400V	10	400	400	75433	GECAP-10/400V-O		005-1184-MF		N/A
	H39	175	86741	GEM175MLTAC3-5	1- 175w MH M 57 or H 39 Quad (120/208/240/277V)	10MFD 400V	10	400	400	75433	GECAP-10/400V-O		005-1184-MF		N/A
	H37	250	87211	GEM250ML5AC3-5	1- 250w MH M 58 or H 37 5-Tap (120/208/240/277/480V)	15MFD 400V	15	400	400	75434	GECAP-15/400V-O		005-1185-MF		N/A
	H37	250	87212	GEM250ML5AC4-5	1- 250w MH M 58 or H 37 5-Tap (120/208/240/277/480V)	15MFD 400V	15	400	400	75434	GECAP-15/400V-O		005-1185-MF		N/A
	H37	250	86765	GEM250MLTAC3-5	1- 250w MH M 58 or H 37 Quad (120/208/240/277V)	15MFD 400V	15	400	400	75434	GECAP-15/400V-O		005-1185-MF		N/A
	H33	400	86803	GEM40048TAC4-5	1- 400w MH M 59 or H 33 480	24MFD 400V	24	400	400	75435	GECAP-24/400V-O		005-2779-MF		N/A
	H33	400	72300	GEM400ML5AA4-5	1- 400w MH M59 or H33 5-Tap (120/208/240/277/480V) Al C&C	24MFD 400V	24	400	360	75435	GECAP-24/400V-O		005-2779-MF		N/A
	H33	400	72149	GEM400MLTAA4-5	1- 400w MH M 59 or H 33 Quad (120/208/240/277V) Al C&C	24MFD 400V	24	400	400	75435	GECAP-24/400V-O		005-2779-MF		N/A
	H36	1000	86650	GEM100048TAC5-5	1- 1000w MH M 47 or H 36 480	24MFD 480V	24	480	480	75668	GECAP-24/480V-O		005-2779-MF		N/A
	H36	1000	87213	GEM1000ML5AC5-5	1- 1000w MH M 47 or H 36 5-Tap (120/208/240/277/480V)	24MFD 480V	24	480	480	75668	GECAP-24/480V-O		005-2779-MF		N/A
	H36	1000	86655	GEM1000MLTAC5-5	1- 1000w MH M 47 or H 36 Quad (120/208/240/277V)	24MFD 480V	24	480	480	75668	GECAP-24/480V-O		005-2779-MF		N/A

See page E-1 for warranty information.

Wiring Diagrams
HID Electronic Ballasts

WD-eHID MLF/MSF

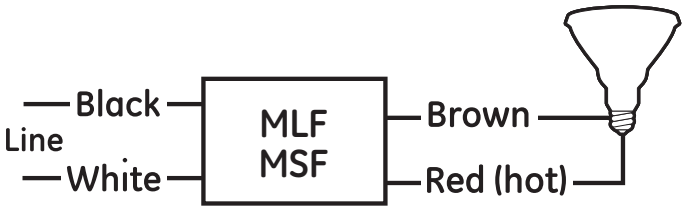

WD-eHID-SLJ

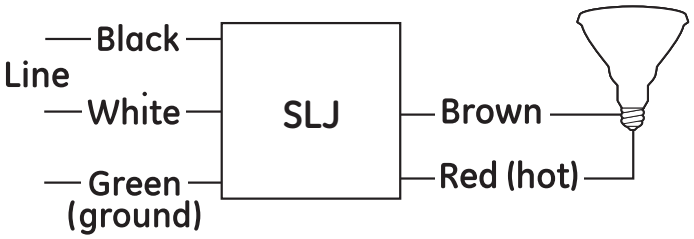

Igniter

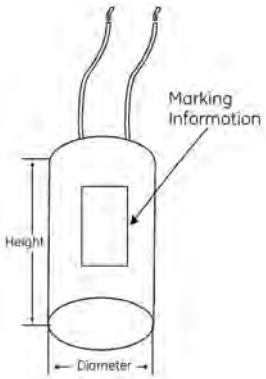

HID Lighting Capacitor

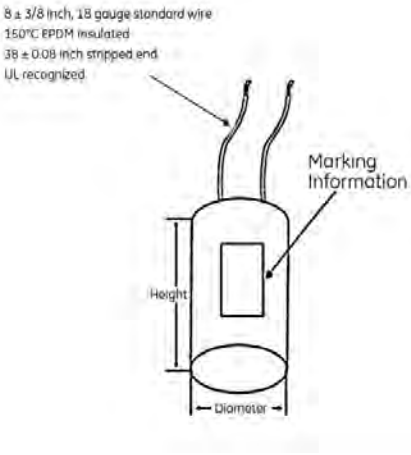

See page E-1 for warranty information.

MLF

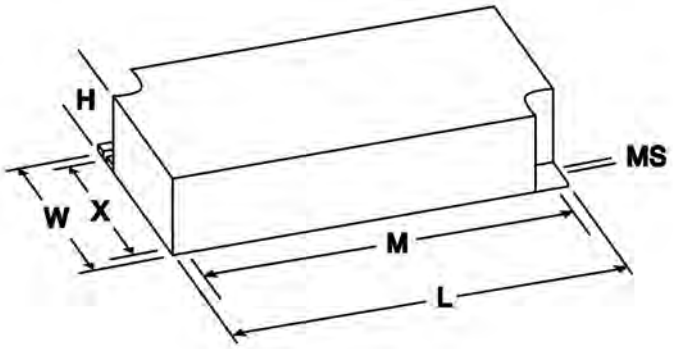

MSF

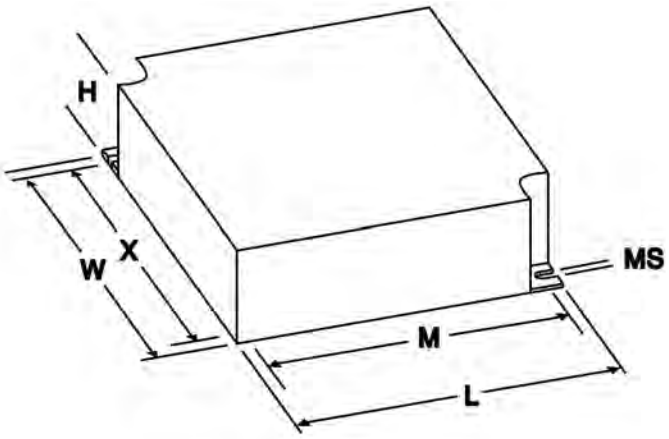

SLJ

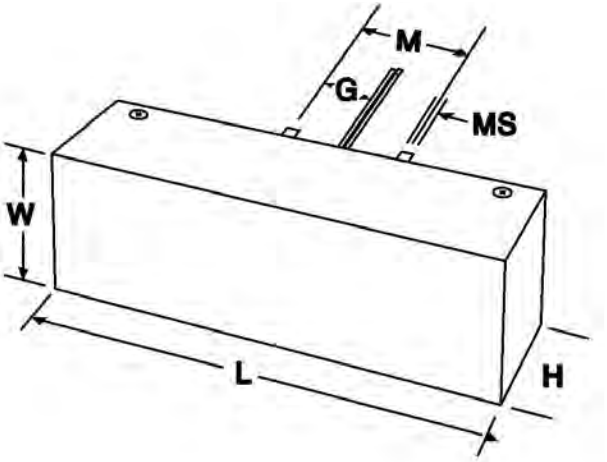

Fig. 2

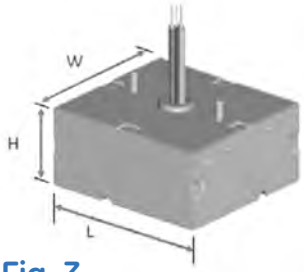

Fig. 3

See page E-1 for warranty information.

Wiring Diagrams
HID Electromagnetic Ballasts

HID H1

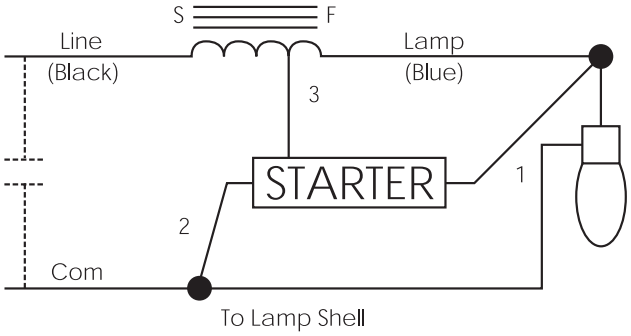

HID H1a

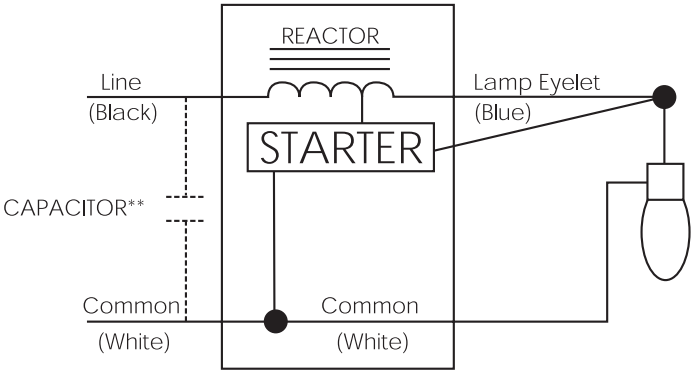

HID H34

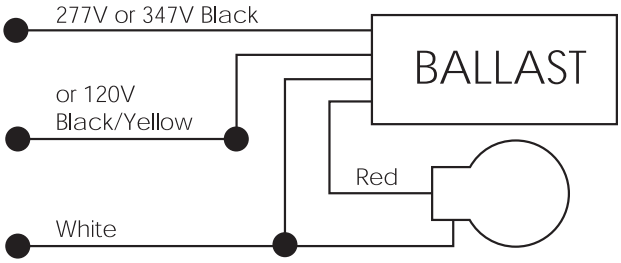

Insulate Unused Input
Lead for 300 Volts.

HID H36

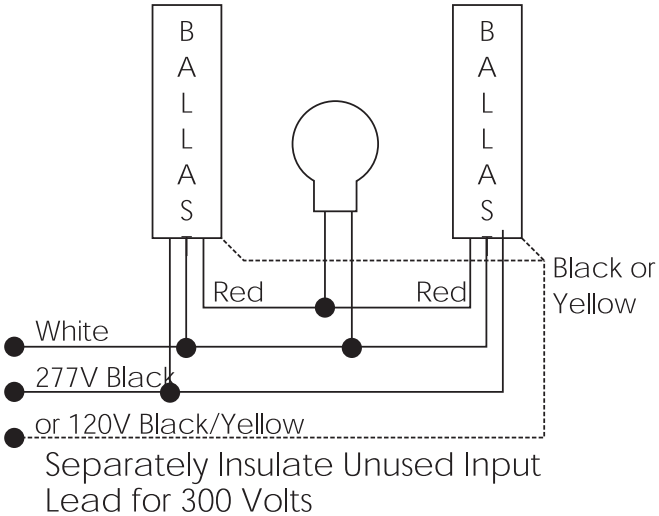

See page E-1 for warranty information.

Wiring Diagrams
HID Electromagnetic Ballasts

HID W-(A)

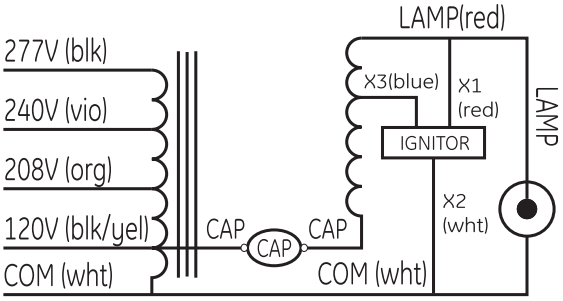

HID W-(B)

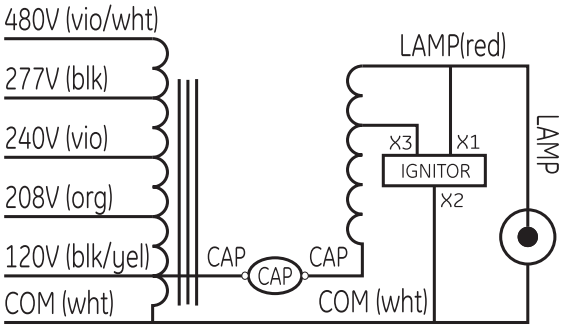

HID W-(C)

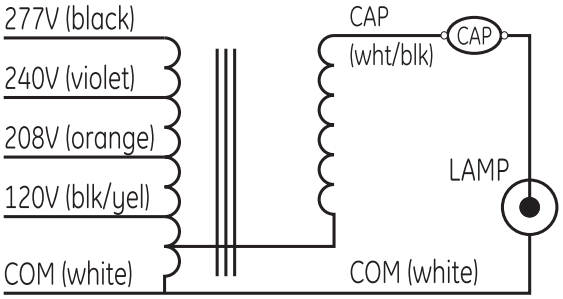

HID W-(D)

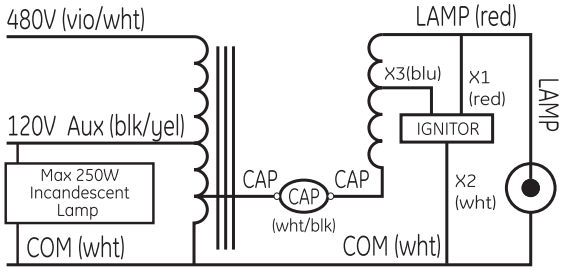

HID W-(E)

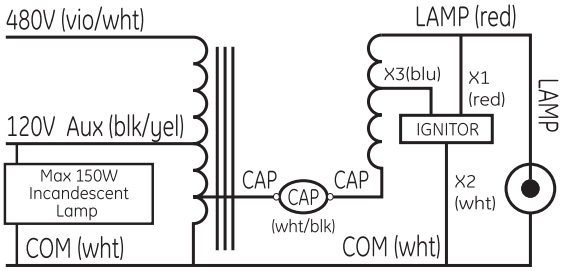

HID W-(F)

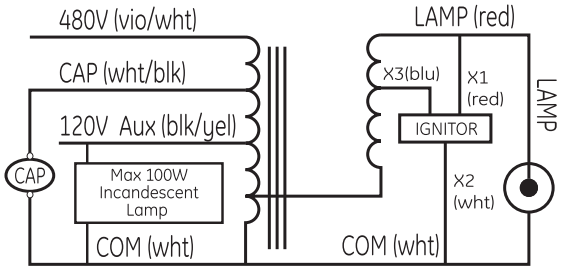

HID W-(H)

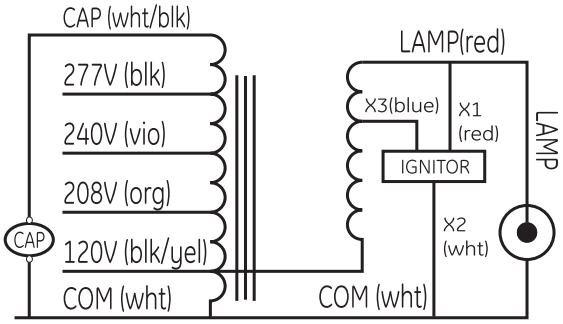

HID W-(J)

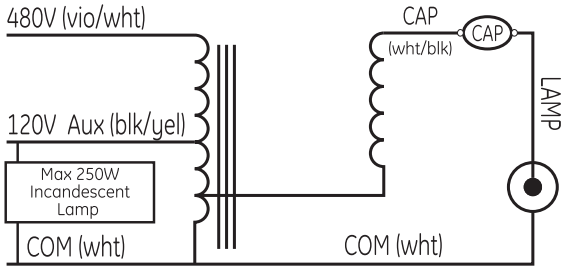

See page E-1 for warranty information.

Wiring Diagrams
HID Electromagnetic Ballasts

HID W-(K)

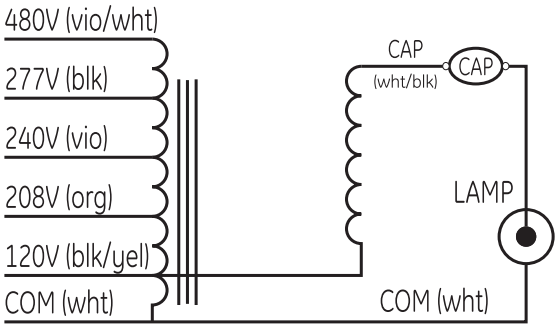

HID W-(L)

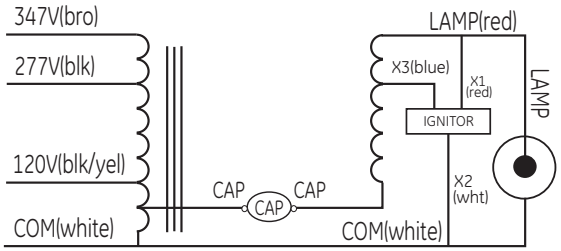

HID W-(M)

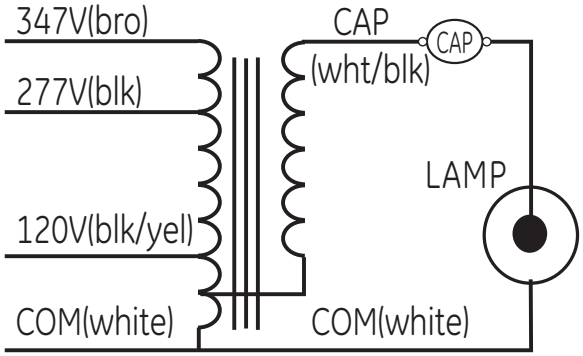

See page E-1 for warranty information.

Case Dimensions
HID Electromagnetic Ballasts

1

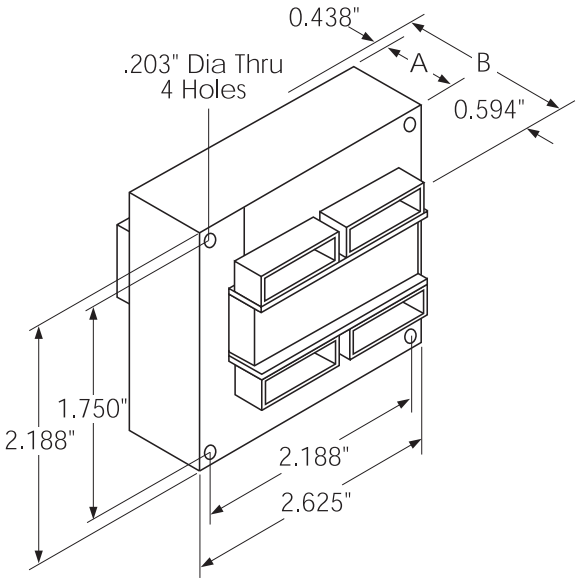

FCAN1

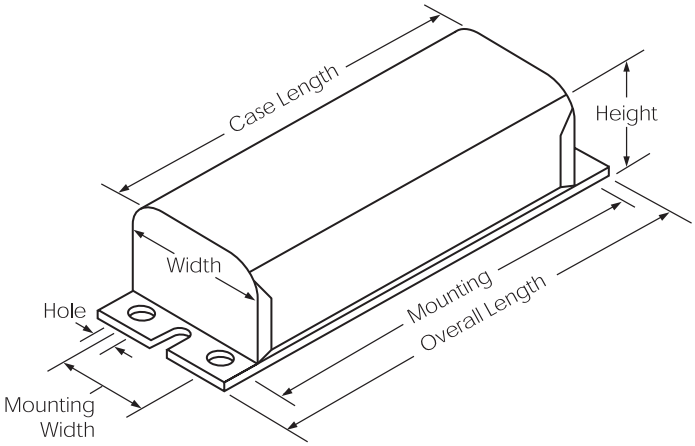

FCAN2

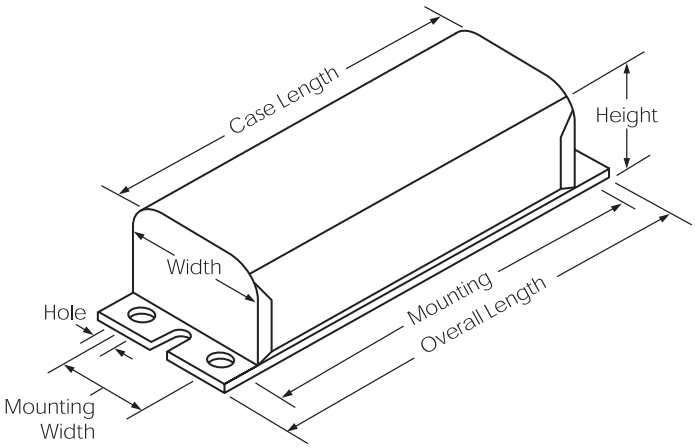

FCAN3

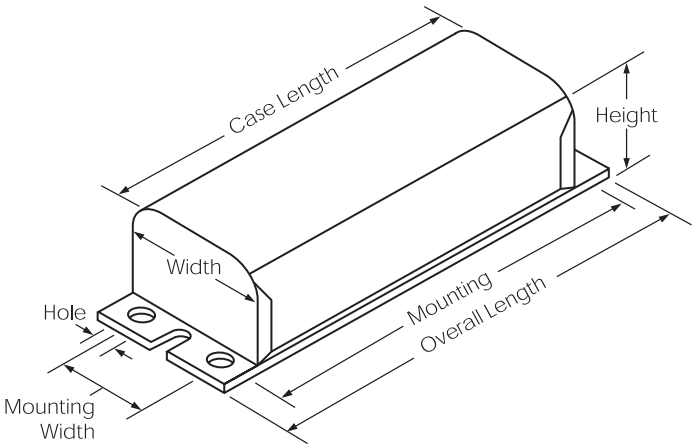

FCAN4

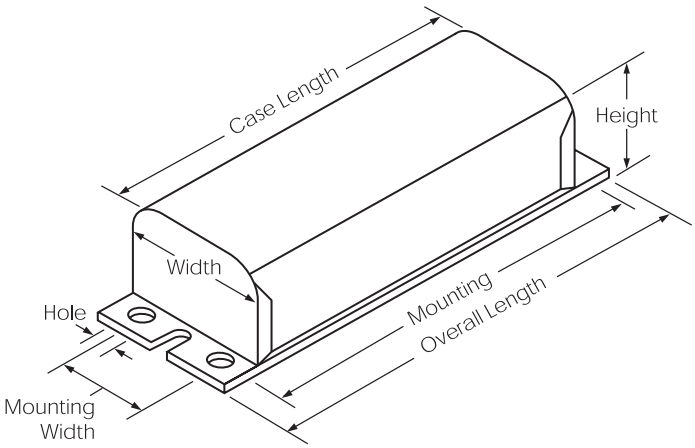

See page E-1 for warranty information.

Case Dimensions
HID Electromagnetic Ballasts

PC1

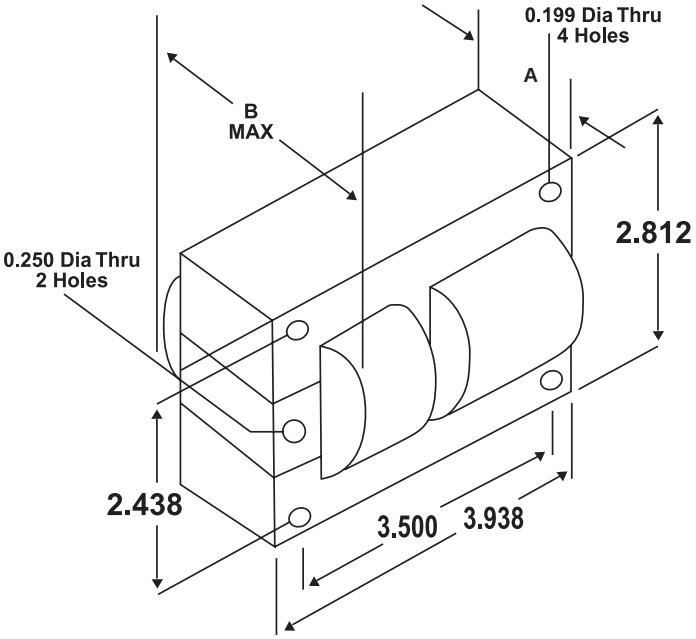

PC2

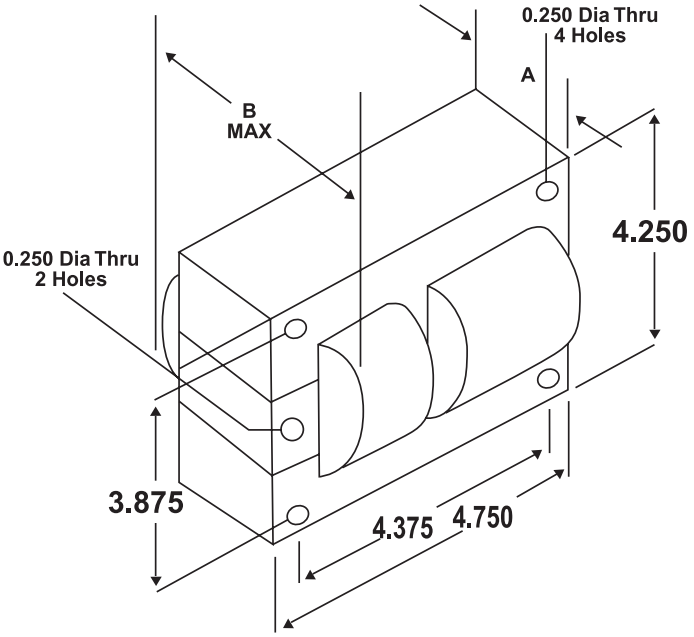

PC3

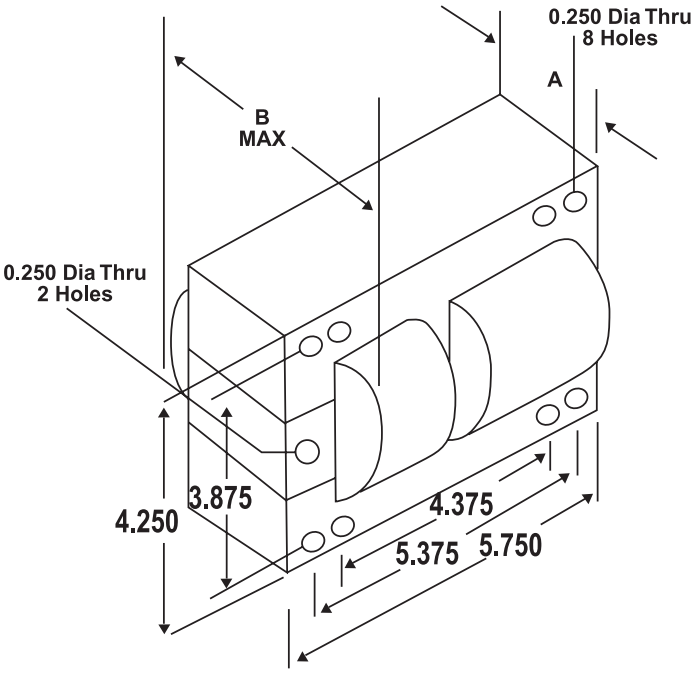

See page E-1 for warranty information.

Notes

See page E-1 for warranty information.

Table of Contents
LED Drivers and Halogen Transformers

GE Lightech™ LED Drivers and Halogen Transformers

One of the most trusted names in lighting is now powering even more innovative lighting solutions. We've combined our leadership, knowledge and experience to bring you effective, reliable GE Lightech™ LED Drivers and Halogen Transformers. Create next-generation lighting systems that push the boundaries of performance and redefine efficiency. Plus, you'll receive the convenience and ease of getting your drivers and transformers from the same source as your lamps and ballasts.

Key applications include signage, architectural, downlight, track lighting and much more.

Full Phase Control Dimmable Drivers

- Dimmable with most LEADING EDGE (Triac) and TRAILING EDGE (ELV) dimmers
- Deep dimming to 1%
- Wide power range (4-36W)
- High power factor
- Efficient
- Side Lead and Bottom Feed versions available
- cULus Recognized, Class 2, 47 CFR Part 15, Class B (Consumer)

Trailing Edge Dimmable Drivers

- Dimmable with TRAILING EDGE (ELV) dimmers
- Dimming to 10%
- Wide power range (4-36W)
- Universal input voltage (120-277V)
- High power factor
- Highly efficient
- Side Lead and Bottom Feed versions available
- Small case size
- cULus Recognized, Class 2, 47 CFR Part 15, Class B (Consumer)

Low-voltage Halogen Electronic Transformers

GE Lightech™ transformers offer outstanding dependability and efficiency, from smarter technology to longer life cycles, and everything in between. Features include:

- Utilizes a unique Auto-Thermal Regulation process – proportional dimming of output voltage over 90°C
- Self-preserving 125°C Thermal Cut-off
- Embedded technology to run cool with higher efficiency – 95% at full load
- Field-effect transistors – resulting in higher efficiency, smaller size and longer life than products with bipolar transistors

66961 –

Halogen Transformer

60W Class 2 Plug-In Electronic Transformer. 12V. Black.

General characteristics

Output Type	AC, Class 2 compliance
Input voltage (V)	120
Input frequency (Hz)	50-60
Power Factor Correction	0.96
Efficiency (%)	90
Output voltage (V)	11.5
Output Wattage Range (W)	20-60
Dimmability	-
Ambient Temperature (°C)	-10 to +50
Case Temperature (°C)	90

Dimensions

Wiring diagram – see example C on page 19-30

Casing length (in)	3.94
Casing width (in)	1.5
Casing height (in)	2.2
Mounting Dims (in)	-
Weight (lb)	0.53
Lead Exit Type	Plug-In
Input wire length (in)	-
Output wire length (in)	120

66962 –

Halogen Transformer

60W Class 2 Plug-In Electronic Transformer. 12V. White.

General characteristics

Output Type	AC, Class 2 compliance
Input voltage (V)	120
Input frequency (Hz)	50-60
Power Factor Correction	0.96
Efficiency (%)	90
Output voltage (V)	11.5
Output Wattage Range (W)	20-60
Dimmability	-
Ambient Temperature (°C)	-10 to +50
Case Temperature (°C)	90

Dimensions

Wiring diagram – see example C on page 19-30

Casing length (in)	3.94
Casing width (in)	1.5
Casing height (in)	2.2
Mounting Dims (in)	-
Weight (lb)	0.53
Lead Exit Type	Plug-In
Input wire length (in)	-
Output wire length (in)	120

66936 –

Halogen Transformer

60W Class 2 Electronic Transformer. 12V. Bottom Feed.

General characteristics

Output Type	AC, Class 2 compliance
Input voltage (V)	120
Input frequency (Hz)	50-60
Power Factor Correction	0.96
Efficiency (%)	95
Output voltage (V)	11.6
Output Wattage Range (W)	20-60
Dimmability	Trailing Edge
Ambient Temperature (°C)	-10 to +50
Case Temperature (°C)	90

Dimensions

Wiring diagram – see example A on page 19-30

Casing length (in)	2.36
Casing width (in)	1.32
Casing height (in)	0.87
Mounting Dims (in)	2.0
Weight (lb)	0.22
Lead Exit Type	Bottom
Input wire length (in)	6.7
Output wire length (in)	5.5

66937 –

Halogen Transformer

60W Class 2 Electronic Transformer. 12V.

General characteristics	
Output Type	AC, Class 2 compliance
Input voltage (V)	120
Input frequency (Hz)	50-60
Power Factor Correction	0.96
Efficiency (%)	94
Output voltage (V)	11.6
Output Wattage Range (W)	20-60
Dimmability	Trailing Edge
Ambient Temperature (°C)	0 to +50
Case Temperature (°C)	90

Dimensions	
Wiring diagram – see example A on page 19-30	
Casing length (in)	2.09
Casing width (in)	1.30
Casing height (in)	0.79
Mounting Dims (in)	-
Weight (lb)	0.22
Lead Exit Type	Side
Input wire length (in)	7.9
Output wire length (in)	5.5

66938 –

Halogen Transformer

60W Class 2 Electronic Transformer. 11.7V. 2.5W minimum load.

General characteristics	
Output Type	AC, Class 2 compliance
Input voltage (V)	120
Input frequency (Hz)	50-60
Power Factor Correction	0.96
Efficiency (%)	94
Output voltage (V)	11.6
Output Wattage Range (W)	2.5-60
Dimmability	Trailing Edge
Ambient Temperature (°C)	0 to +50
Case Temperature (°C)	90

Dimensions	
Wiring diagram – see example A on page 19-30	
Casing length (in)	2.09
Casing width (in)	1.3
Casing height (in)	0.79
Mounting Dims (in)	-
Weight (lb)	0.22
Lead Exit Type	Side
Input wire length (in)	7.9
Output wire length (in)	5.5

66939 –

Halogen Transformer

60W Class 2 Electronic Transformer. 12V. Dimming Loop.

General characteristics	
Output Type	AC, Class 2 compliance
Input voltage (V)	120
Input frequency (Hz)	60
Power Factor Correction	0.96
Efficiency (%)	94
Output voltage (V)	11.6
Output Wattage Range (W)	20-60
Dimmability	0-10V
Ambient Temperature (°C)	0 to +50
Case Temperature (°C)	90

Dimensions	
Wiring diagram – see example D on page 19-30	
Casing length (in)	2.09
Casing width (in)	1.3
Casing height (in)	0.79
Mounting Dims (in)	-
Weight (lb)	0.22
Lead Exit Type	Side
Input wire length (in)	8.7
Output wire length (in)	5.5

66940 –

Halogen Transformer

60W Class 2 Electronic Transformer. 12V. Potentiometer on Dimming Loop.

General characteristics	
Output Type	AC, Class 2 compliance
Input voltage (V)	120
Input frequency (Hz)	60
Power Factor Correction	0.96
Efficiency (%)	94
Output voltage (V)	11.6
Output Wattage Range (W)	20-60
Dimmability	0-10V
Ambient Temperature (°C)	0 to +50
Case Temperature (°C)	90

Dimensions	
Wiring diagram – see example D on page 19-30	
Casing length (in)	2.09
Casing width (in)	1.3
Casing height (in)	0.79
Mounting Dims (in)	-
Weight (lb)	0.22
Lead Exit Type	Side
Input wire length (in)	8.7
Output wire length (in)	5.5

66943 –

Halogen Transformer

60W Class 2 Electronic Transformer. 12V. Ground Wire. Double-Sided Tape.

General characteristics	
Output Type	AC, Class 2 compliance
Input voltage (V)	120
Input frequency (Hz)	60
Power Factor Correction	0.96
Efficiency (%)	94
Output voltage (V)	11.6
Output Wattage Range (W)	20-60
Dimmability	Trailing Edge
Ambient Temperature (°C)	0 to +50
Case Temperature (°C)	90

Dimensions	
Wiring diagram – see example E on page 19-30	
Casing length (in)	2.09
Casing width (in)	1.30
Casing height (in)	0.79
Mounting Dims (in)	-
Weight (lb)	0.22
Lead Exit Type	Side
Input wire length (in)	7.9
Output wire length (in)	5.5

66963 –

Halogen Transformer

60W Class 2 Electronic Transformer. 12V. In Secondary Housing.

General characteristics	
Output Type	AC, Class 2 compliance
Input voltage (V)	120
Input frequency (Hz)	50-60
Power Factor Correction	0.96
Efficiency (%)	94
Output voltage (V)	11.6
Output Wattage Range (W)	20-60
Dimmability	Trailing Edge
Ambient Temperature (°C)	0 to +50
Case Temperature (°C)	90

Dimensions	
Wiring diagram – see example A on page 19-30	
Casing length (in)	6.5
Casing width (in)	1.7
Casing height (in)	1.42
Mounting Dims (in)	-
Weight (lb)	0.75
Lead Exit Type	Side
Input wire length (in)	-
Output wire length (in)	-

66945 –

Halogen Transformer

75W Electronic Transformer. 12V.

General characteristics	
Output Type	AC
Input voltage (V)	120
Input frequency (Hz)	50-60
Power Factor Correction	0.95
Efficiency (%)	95
Output voltage (V)	11.6
Output Wattage Range (W)	20-75
Dimmability	Trailing Edge
Ambient Temperature (°C)	-10 to +50
Case Temperature (°C)	90

Dimensions	
Wiring diagram – see example A on page 19-30	
Casing length (in)	2.1
Casing width (in)	1.3
Casing height (in)	0.79
Mounting Dims (in)	-
Weight (lb)	0.22
Lead Exit Type	Side
Input wire length (in)	7.9
Output wire length (in)	5.5

66967 –

Halogen Transformer

75W Electronic Transformer. Mounting Tab.

General characteristics	
Output Type	AC
Input voltage (V)	120
Input frequency (Hz)	50-60
Power Factor Correction	0.95
Efficiency (%)	95
Output voltage (V)	11.6
Output Wattage Range (W)	20-75
Dimmability	Trailing Edge
Ambient Temperature (°C)	-10 to +50
Case Temperature (°C)	90

Dimensions	
Wiring diagram – see example A on page 19-30	
Casing length (in)	2.4
Casing width (in)	1.3
Casing height (in)	0.79
Mounting Dims (in)	-
Weight (lb)	0.22
Lead Exit Type	Side
Input wire length (in)	7.9
Output wire length (in)	5.9

66946 –

Halogen Transformer

75W Electronic Transformer. 12V. Bottom Feed.

General characteristics	
Output Type	AC
Input voltage (V)	120
Input frequency (Hz)	50-60
Power Factor Correction	0.95
Efficiency (%)	95
Output voltage (V)	11.6
Output Wattage Range (W)	20-75
Dimmability	Trailing Edge
Ambient Temperature (°C)	-10 to +50
Case Temperature (°C)	90

Dimensions	
Wiring diagram – see example A on page 19-30	
Casing length (in)	2.36
Casing width (in)	1.32
Casing height (in)	0.87
Mounting Dims (in)	2.0
Weight (lb)	0.22
Lead Exit Type	Bottom
Input wire length (in)	7.3
Output wire length (in)	5.5

66947 –

Halogen Transformer

75W Electronic Transformer. 12V. Ground Wire.

General characteristics

Output Type	AC
Input voltage (V)	120
Input frequency (Hz)	50-60
Power Factor Correction	0.95
Efficiency (%)	95
Output voltage (V)	11.6
Output Wattage Range (W)	20-75
Dimmability	Trailing Edge
Ambient Temperature (°C)	-10 to +50
Case Temperature (°C)	90

Dimensions

Wiring diagram – see example E on page 19-30

Casing length (in)	2.1
Casing width (in)	1.3
Casing height (in)	0.79
Mounting Dims (in)	-
Weight (lb)	0.22
Lead Exit Type	Side
Input wire length (in)	7.9
Output wire length (in)	5.5

66948 –

Halogen Transformer

75W Electronic Transformer. 12V. Double-Sided Tape.

General characteristics

Output Type	AC
Input voltage (V)	120
Input frequency (Hz)	50-60
Power Factor Correction	0.95
Efficiency (%)	95
Output voltage (V)	11.6
Output Wattage Range (W)	20-75
Dimmability	Trailing Edge
Ambient Temperature (°C)	-10 to +50
Case Temperature (°C)	90

Dimensions

Wiring diagram – see example A on page 19-30

Casing length (in)	2.1
Casing width (in)	1.3
Casing height (in)	0.79
Mounting Dims (in)	-
Weight (lb)	0.22
Lead Exit Type	Side
Input wire length (in)	7.9
Output wire length (in)	5.5

66951 –

Halogen Transformer

75W Electronic Transformer. 24V.

General characteristics

Output Type	AC
Input voltage (V)	120
Input frequency (Hz)	50-60
Power Factor Correction	0.95
Efficiency (%)	95
Output voltage (V)	23.2
Output Wattage Range (W)	20-75
Dimmability	Trailing Edge
Ambient Temperature (°C)	-10 to +50
Case Temperature (°C)	90

Dimensions

Wiring diagram – see example F on page 19-30

Casing length (in)	2.1
Casing width (in)	1.3
Casing height (in)	0.79
Mounting Dims (in)	-
Weight (lb)	0.22
Lead Exit Type	Side
Input wire length (in)	6.0
Output wire length (in)	6.0

66952 –

Halogen Transformer

75W Electronic Transformer. 12V. Increased EMI Filtering.

General characteristics	
Output Type	AC
Input voltage (V)	120
Input frequency (Hz)	50-60
Power Factor Correction	0.95
Efficiency (%)	94
Output voltage (V)	11.6
Output Wattage Range (W)	10-75
Dimmability	Trailing Edge
Ambient Temperature (°C)	-10 to +50
Case Temperature (°C)	90

Dimensions	
Wiring diagram – see example A on page 19-30	
Casing length (in)	2.52
Casing width (in)	1.34
Casing height (in)	0.83
Mounting Dims (in)	-
Weight (lb)	0.22
Lead Exit Type	Side
Input wire length (in)	8.7
Output wire length (in)	8.7

66953 –

Halogen Transformer

75W Electronic Transformer. 12V. Increased EMI Filtering. Bottom Feed.

General characteristics	
Output Type	AC
Input voltage (V)	120
Input frequency (Hz)	50-60
Power Factor Correction	0.95
Efficiency (%)	94
Output voltage (V)	11.6
Output Wattage Range (W)	10-75
Dimmability	Trailing Edge
Ambient Temperature (°C)	-10 to +50
Case Temperature (°C)	90

Dimensions	
Wiring diagram – see example A on page 19-30	
Casing length (in)	3.48
Casing width (in)	1.44
Casing height (in)	1.15
Mounting Dims (in)	2.0
Weight (lb)	0.24
Lead Exit Type	Bottom
Input wire length (in)	6.3
Output wire length (in)	6.3

68662 –

Halogen Transformer

75W Electronic Transformer. 12V. Black.

General characteristics	
Output Type	AC
Input voltage (V)	240
Input frequency (Hz)	50-60
Power Factor Correction	0.95
Efficiency (%)	94
Output voltage (V)	11.7
Output Wattage Range (W)	20-75
Dimmability	Trailing Edge
Ambient Temperature (°C)	-10 to +50
Case Temperature (°C)	85

Dimensions	
Wiring diagram – see example G on page 19-30	
Casing length (in)	2.52
Casing width (in)	1.34
Casing height (in)	0.83
Mounting Dims (in)	-
Weight (lb)	0.22
Lead Exit Type	Side
Input wire length (in)	8.1
Output wire length (in)	7.7

66954 –

Halogen Transformer

75W Electronic Transformer. 12V. 277V Input.

General characteristics	
Output Type	AC
Input voltage (V)	277
Input frequency (Hz)	50-60
Power Factor Correction	0.95
Efficiency (%)	-
Output voltage (V)	11.5
Output Wattage Range (W)	35-75
Dimmability	Trailing Edge
Ambient Temperature (°C)	0 to +50
Case Temperature (°C)	90

Dimensions	
Wiring diagram – see example H on page 19-30	
Casing length (in)	2.52
Casing width (in)	1.34
Casing height (in)	0.83
Mounting Dims (in)	-
Weight (lb)	0.25
Lead Exit Type	Side
Input wire length (in)	7.1
Output wire length (in)	9.1

66955 –

Halogen Transformer

75W Electronic Transformer. 12V. 277V Input. Bottom Feed.

General characteristics	
Output Type	AC
Input voltage (V)	277
Input frequency (Hz)	50-60
Power Factor Correction	0.95
Efficiency (%)	-
Output voltage (V)	11.5
Output Wattage Range (W)	35-75
Dimmability	Trailing Edge
Ambient Temperature (°C)	0 to +50
Case Temperature (°C)	90

Dimensions	
Wiring diagram – see example H on page 19-30	
Casing length (in)	3.48
Casing width (in)	1.44
Casing height (in)	1.15
Mounting Dims (in)	2.0
Weight (lb)	0.26
Lead Exit Type	Bottom
Input wire length (in)	6.3
Output wire length (in)	6.3

66956 –

Halogen Transformer

105W Electronic Transformer. 12V.

General characteristics	
Output Type	AC
Input voltage (V)	120
Input frequency (Hz)	50-60
Power Factor Correction	0.95
Efficiency (%)	94
Output voltage (V)	11.5
Output Wattage Range (W)	20-100
Dimmability	Trailing Edge
Ambient Temperature (°C)	-10 to +50
Case Temperature (°C)	90

Dimensions	
Wiring diagram – see example A on page 19-30	
Casing length (in)	3.15
Casing width (in)	1.35
Casing height (in)	0.95
Mounting Dims (in)	-
Weight (lb)	0.27
Lead Exit Type	Side
Input wire length (in)	7.7
Output wire length (in)	7.3

68663 –

Halogen Transformer

105W Electronic Transformer. 12V. 240V Input.

General characteristics

Output Type	AC
Input voltage (V)	240
Input frequency (Hz)	50-60
Power Factor Correction	0.95
Efficiency (%)	94
Output voltage (V)	11.6
Output Wattage Range (W)	20-105
Dimmability	Trailing Edge
Ambient Temperature (°C)	-10 to +50
Case Temperature (°C)	85

Dimensions

Wiring diagram – see example G on page 19-30

Casing length (in)	3.15
Casing width (in)	1.25
Casing height (in)	1.04
Mounting Dims (in)	3.53
Weight (lb)	0.29
Lead Exit Type	Side
Input wire length (in)	6.7
Output wire length (in)	6.7

66957 –

Halogen Transformer

150W Electronic Transformer. 12V. Bottom Feed.

General characteristics

Output Type	AC
Input voltage (V)	120
Input frequency (Hz)	50-60
Power Factor Correction	0.98
Efficiency (%)	93
Output voltage (V)	11.6
Output Wattage Range (W)	50-150
Dimmability	Trailing Edge
Ambient Temperature (°C)	-10 to +50
Case Temperature (°C)	85

Dimensions

Wiring diagram – see example A on page 19-30

Casing length (in)	3.31
Casing width (in)	1.38
Casing height (in)	1.61
Mounting Dims (in)	4.13
Weight (lb)	0.42
Lead Exit Type	Bottom
Input wire length (in)	6.3
Output wire length (in)	6.3

66958 –

Halogen Transformer

150W Electronic Transformer. 12V.

General characteristics

Output Type	AC
Input voltage (V)	120
Input frequency (Hz)	50-60
Power Factor Correction	0.98
Efficiency (%)	93
Output voltage (V)	11.6
Output Wattage Range (W)	50-150
Dimmability	Trailing Edge
Ambient Temperature (°C)	-10 to +50
Case Temperature (°C)	85

Dimensions

Wiring diagram – see example A on page 19-30

Casing length (in)	3.44
Casing width (in)	1.38
Casing height (in)	1.22
Mounting Dims (in)	3.62
Weight (lb)	0.42
Lead Exit Type	Side
Input wire length (in)	7.1
Output wire length (in)	9.1

66970 –

Halogen Transformer

150W Electronic Transformer. 24V.

General characteristics	
Output Type	AC
Input voltage (V)	120
Input frequency (Hz)	50-60
Power Factor Correction	0.98
Efficiency (%)	93
Output voltage (V)	23
Output Wattage Range (W)	50-150
Dimmability	Trailing Edge
Ambient Temperature (°C)	-10 to +50
Case Temperature (°C)	85

Dimensions	
Wiring diagram – see example F on page 19-30	
Casing length (in)	3.44
Casing width (in)	1.38
Casing height (in)	1.22
Mounting Dims (in)	3.62
Weight (lb)	0.42
Lead Exit Type	Side
Input wire length (in)	7.1
Output wire length (in)	9.1

66969 –

Halogen Transformer

150W Electronic Transformer. 12V. In Secondary Housing.

General characteristics	
Output Type	AC
Input voltage (V)	120
Input frequency (Hz)	50-60
Power Factor Correction	0.98
Efficiency (%)	93
Output voltage (V)	11.5
Output Wattage Range (W)	50-150
Dimmability	Trailing Edge
Ambient Temperature (°C)	-10 to +50
Case Temperature (°C)	85

Dimensions	
Wiring diagram – see example A on page 19-30	
Casing length (in)	9.35
Casing width (in)	1.82
Casing height (in)	1.4
Mounting Dims (in)	-
Weight (lb)	0.95
Lead Exit Type	Side
Input wire length (in)	-
Output wire length (in)	-

66972 –

Halogen Transformer

150W Electronic Transformer. 24V. In Secondary housing.

General characteristics	
Output Type	AC
Input voltage (V)	120
Input frequency (Hz)	50-60
Power Factor Correction	0.98
Efficiency (%)	93
Output voltage (V)	23
Output Wattage Range (W)	50-150
Dimmability	Trailing Edge
Ambient Temperature (°C)	-10 to +40
Case Temperature (°C)	85

Dimensions	
Wiring diagram – see example F on page 19-30	
Casing length (in)	9.35
Casing width (in)	1.82
Casing height (in)	1.4
Mounting Dims (in)	-
Weight (lb)	0.95
Lead Exit Type	Side
Input wire length (in)	-
Output wire length (in)	-

68664 –

Halogen Transformer

150W Class 2 Electronic Transformer. 12V.

General characteristics

Output Type	AC
Input voltage (V)	240
Input frequency (Hz)	50-60
Power Factor Correction	0.95
Efficiency (%)	-
Output voltage (V)	11.5
Output Wattage Range (W)	50-150
Dimmability	Trailing Edge
Ambient Temperature (°C)	10 to +45
Case Temperature (°C)	85

Dimensions

Wiring diagram – see example G on page 19-30

Casing length (in)	4.25
Casing width (in)	1.26
Casing height (in)	1.14
Mounting Dims (in)	4.72
Weight (lb)	0.37
Lead Exit Type	Side
Input wire length (in)	7.3
Output wire length (in)	7.3

66960 –

Halogen Transformer

200W Electronic Transformer. 12V. Increased EMI Filtering.

General characteristics

Output Type	AC
Input voltage (V)	120
Input frequency (Hz)	50-60
Power Factor Correction	0.98
Efficiency (%)	94
Output voltage (V)	11.5
Output Wattage Range (W)	50-200
Dimmability	Trailing Edge
Ambient Temperature (°C)	0 to +50
Case Temperature (°C)	90

Dimensions

Wiring diagram – see example A on page 19-30

Casing length (in)	4.33
Casing width (in)	1.57
Casing height (in)	1.24
Mounting Dims (in)	4.61
Weight (lb)	0.66
Lead Exit Type	Side
Input wire length (in)	7.1
Output wire length (in)	9.0

66973 –

Halogen Transformer

300W Electronic Transformer. 12V. Round.

General characteristics

Output Type	AC
Input voltage (V)	120
Input frequency (Hz)	60
Power Factor Correction	0.99
Efficiency (%)	95.5
Output voltage (V)	11.8
Output Wattage Range (W)	50-300
Dimmability	Trailing Edge
Ambient Temperature (°C)	0 to +50
Case Temperature (°C)	90

Dimensions

Wiring diagram – see example A on page 19-30

Casing length (in)	3.62
Casing width (in)	-
Casing height (in)	1.26
Mounting Dims (in)	-
Weight (lb)	1.03
Lead Exit Type	Side
Input wire length (in)	6.5
Output wire length (in)	6.5

66975 –

Halogen Transformer

300W Electronic Transformer. 12V.

General characteristics	
Output Type	AC
Input voltage (V)	120
Input frequency (Hz)	60
Power Factor Correction	0.99
Efficiency (%)	95.5
Output voltage (V)	11.8
Output Wattage Range (W)	50-300
Dimmability	Trailing Edge
Ambient Temperature (°C)	0 to +50
Case Temperature (°C)	90

Dimensions	
Wiring diagram – see example A on page 19-30	
Casing length (in)	6.02
Casing width (in)	1.54
Casing height (in)	1.12
Mounting Dims (in)	5.51
Weight (lb)	0.74
Lead Exit Type	Side
Input wire length (in)	6.9
Output wire length (in)	6.9

66977 –

Halogen Transformer

300W Electronic Transformer. 24V.

General characteristics	
Output Type	AC
Input voltage (V)	120
Input frequency (Hz)	60
Power Factor Correction	0.99
Efficiency (%)	95.5
Output voltage (V)	24
Output Wattage Range (W)	50-300
Dimmability	Trailing Edge
Ambient Temperature (°C)	0 to +50
Case Temperature (°C)	90

Dimensions	
Wiring diagram – see example F on page 19-30	
Casing length (in)	6.02
Casing width (in)	1.54
Casing height (in)	1.12
Mounting Dims (in)	5.51
Weight (lb)	0.74
Lead Exit Type	Side
Input wire length (in)	6.9
Output wire length (in)	6.9

66979 –

Halogen Transformer

300W Electronic Transformer. 12V. In Secondary Housing.

General characteristics	
Output Type	AC
Input voltage (V)	120
Input frequency (Hz)	60
Power Factor Correction	0.99
Efficiency (%)	95.5
Output voltage (V)	11.8
Output Wattage Range (W)	50-300
Dimmability	Trailing Edge
Ambient Temperature (°C)	0 to +50
Case Temperature (°C)	90

Dimensions	
Wiring diagram – see example A on page 19-30	
Casing length (in)	9.35
Casing width (in)	1.82
Casing height (in)	1.4
Mounting Dims (in)	-
Weight (lb)	1.5
Lead Exit Type	Side
Input wire length (in)	-
Output wire length (in)	-

66980 –

Halogen Transformer

300W Electronic Transformer. 24V. In Secondary Housing.

General characteristics	
Output Type	AC
Input voltage (V)	120
Input frequency (Hz)	60
Power Factor Correction	0.99
Efficiency (%)	95.5
Output voltage (V)	24
Output Wattage Range (W)	50-300
Dimmability	Trailing Edge
Ambient Temperature (°C)	0 to +50
Case Temperature (°C)	90

Dimensions	
Wiring diagram – see example F on page 19-30	
Casing length (in)	9.35
Casing width (in)	1.82
Casing height (in)	1.4
Mounting Dims (in)	-
Weight (lb)	1.5
Lead Exit Type	Side
Input wire length (in)	-
Output wire length (in)	-

66978 –

Halogen Transformer

360W Class 2 Electronic Transformer. 12V. 6 x 60W.

General characteristics	
Output Type	AC, Class 2 compliance
Input voltage (V)	120
Input frequency (Hz)	50-60
Power Factor Correction	0.96
Efficiency (%)	95
Output voltage (V)	11.6
Output Wattage Range (W)	20-360
Dimmability	Trailing Edge
Ambient Temperature (°C)	-10 to +50
Case Temperature (°C)	90

Dimensions	
Wiring diagram – see example I on page 19-30	
Casing length (in)	8.27
Casing width (in)	4.72
Casing height (in)	1.71
Mounting Dims (in)	-
Weight (lb)	2.43
Lead Exit Type	Side
Input wire length (in)	-
Output wire length (in)	-

68665 –

Halogen Transformer

Line Filter. EMI Filter. In-line.

General characteristics	
Output Type	AC
Input voltage (V)	120
Input frequency (Hz)	50-60
Power Factor Correction	-
Efficiency (%)	-
Inductance (mH)	15
Output Wattage Range (W)	-
Dimmability	-
Ambient Temperature (°C)	-10 to +50
Case Temperature (°C)	90

Dimensions	
Wiring diagram – see example J on page 19-30	
Casing length (in)	1.3
Casing width (in)	1.18
Casing height (in)	0.74
Mounting Dims (in)	-
Weight (lb)	0.13
Lead Exit Type	Side
Input wire length (in)	2.2
Output wire length (in)	2.2

66866 –

Constant Current, Class 2 Compliance

6W LED Driver. 700mA. Non-Dimming.

General characteristics	
Input Voltage (V)	120-277
Input Frequency (Hz)	50-60
Efficiency (%)	70
Output Type	DC
Output Current (mA)	700
Output Voltage Range (V)	2.0-11.0
Output Wattage Range (W)	1.4-7.7
Dimmability	None
Ambient Temperature min (°C)	-25
Ambient Temperature max (°C)	50
Case Temperature (°C)	71

Dimensions	
Wiring diagram – see example K on page 19-30	
Casing length (in)	1.77
Casing width (in)	1.77
Casing height (in)	0.98
Mounting Dims (in)	2.05
Weight (lb)	0.25
Lead Exit Type	Side
Input wire length (in)	8.1
Output wire length (in)	8.1

66867 –

Constant Current, Class 2 Compliance

10W LED Driver. 350mA. Non-Dimming. Terminal Blocks.

General characteristics	
Input Voltage (V)	100-240
Input Frequency (Hz)	50-60
Efficiency (%)	78
Output Type	DC
Output Current (mA)	350
Output Voltage Range (V)	2.3-28.0
Output Wattage Range (W)	0.81-9.8
Dimmability	None
Ambient Temperature min (°C)	-25
Ambient Temperature max (°C)	50
Case Temperature (°C)	90

Dimensions	
Wiring diagram – see example B on page 19-30	
Casing length (in)	3.94
Casing width (in)	1.57
Casing height (in)	1.05
Mounting Dims (in)	3.54x1.18
Weight (lb)	0.21
Lead Exit Type	Terminals
Input wire length (in)	-
Output wire length (in)	-

66868 –

Constant Current, Class 2 Compliance

10W LED Driver. 700mA. Non-Dimming.

General characteristics	
Input Voltage (V)	100-240
Input Frequency (Hz)	50-60
Efficiency (%)	68
Output Type	DC
Output Current (mA)	700
Output Voltage Range (V)	2.3-15.0
Output Wattage Range (W)	1.61-10.5
Dimmability	None
Ambient Temperature min (°C)	-25
Ambient Temperature max (°C)	50
Case Temperature (°C)	90

Dimensions	
Wiring diagram – see example K on page 19-30	
Casing length (in)	3.82
Casing width (in)	1.57
Casing height (in)	0.91
Mounting Dims (in)	3.62x1.18
Weight (lb)	0.39
Lead Exit Type	Side
Input wire length (in)	19.1
Output wire length (in)	19.1

66863 –

Constant Current, Class 2 Compliance

1W LED Driver. 350mA. Non-Dimming.

General characteristics

Input Voltage (V)	100-240
Input Frequency (Hz)	50-60
Efficiency (%)	50
Output Type	DC
Output Current (mA)	350
Output Voltage Range (V)	2.0-6.0
Output Wattage Range (W)	0.7-2.1
Dimmability	None
Ambient Temperature min (°C)	-25
Ambient Temperature max (°C)	50
Case Temperature (°C)	90

Dimensions

Wiring diagram – see example K on page 19-30

Casing length (in)	1.34
Casing width (in)	1.26
Casing height (in)	0.98
Mounting Dims (in)	-
Weight (lb)	0.14
Lead Exit Type	Side
Input wire length (in)	7.7
Output wire length (in)	7.7

66864 –

Constant Current, Class 2 Compliance

6W LED Driver. 350mA. Non-Dimming.

General characteristics

Input Voltage (V)	120-277
Input Frequency (Hz)	50-60
Efficiency (%)	70
Output Type	DC
Output Current (mA)	350
Output Voltage Range (V)	2.0-20.0
Output Wattage Range (W)	0.7-7.0
Dimmability	None
Ambient Temperature min (°C)	-25
Ambient Temperature max (°C)	50
Case Temperature (°C)	71

Dimensions

Wiring diagram – see example K on page 19-30

Casing length (in)	1.77
Casing width (in)	1.77
Casing height (in)	0.98
Mounting Dims (in)	2.05
Weight (lb)	0.25
Lead Exit Type	Side
Input wire length (in)	8.1
Output wire length (in)	8.1

66865 –

Constant Current, Class 2 Compliance

6W LED Driver. 500mA. Non-Dimming.

General characteristics

Input Voltage (V)	120-277
Input Frequency (Hz)	50-60
Efficiency (%)	70
Output Type	DC
Output Current (mA)	500
Output Voltage Range (V)	2.0-14.0
Output Wattage Range (W)	1.0-7.0
Dimmability	None
Ambient Temperature min (°C)	-25
Ambient Temperature max (°C)	50
Case Temperature (°C)	71

Dimensions

Wiring diagram – see example K on page 19-30

Casing length (in)	1.77
Casing width (in)	1.77
Casing height (in)	0.98
Mounting Dims (in)	2.05
Weight (lb)	0.25
Lead Exit Type	Side
Input wire length (in)	8.1
Output wire length (in)	8.1

66870 –

Constant Current, Class 2 Compliance

10W LED Driver. 350mA. Non-Dimming. In Secondary Housing.

General characteristics	
Input Voltage (V)	120
Input Frequency (Hz)	50-60
Efficiency (%)	78
Output Type	DC
Output Current (mA)	350
Output Voltage Range (V)	2.3-28.0
Output Wattage Range (W)	0.81-9.8
Dimmability	None
Ambient Temperature min (°C)	-25
Ambient Temperature max (°C)	50
Case Temperature (°C)	90

Dimensions	
Wiring diagram – see example K on page 19-30	
Casing length (in)	6.48
Casing width (in)	1.68
Casing height (in)	1.41
Mounting Dims (in)	-
Weight (lb)	0.87
Lead Exit Type	Side
Input wire length (in)	-
Output wire length (in)	-

66880 –

Constant Current, Class 2 Compliance

10W LED Driver. 350mA. Non-Dimming. Plug-In. White.

General characteristics	
Input Voltage (V)	120
Input Frequency (Hz)	50-60
Efficiency (%)	78
Output Type	DC
Output Current (mA)	350
Output Voltage Range (V)	2.3-2.9
Output Wattage Range (W)	0.81-10.15
Dimmability	None
Ambient Temperature min (°C)	10
Ambient Temperature max (°C)	35
Case Temperature (°C)	90

Dimensions	
Wiring diagram – see example C on page 19-30	
Casing length (in)	3.15
Casing width (in)	1.50
Casing height (in)	0.95
Mounting Dims (in)	-
Weight (lb)	0.53
Lead Exit Type	Plug-in
Input wire length (in)	-
Output wire length (in)	120

66871 –

Constant Current, Class 2 Compliance

18W LED Driver. 350mA. TE Dimming.

General characteristics	
Input Voltage (V)	120-277
Input Frequency (Hz)	50-60
Efficiency (%)	85
Output Type	DC
Output Current (mA)	350
Output Voltage Range (V)	4.0-52.0
Output Wattage Range (W)	1.4-18.20
Dimmability	Trailing Edge
Ambient Temperature min (°C)	-25
Ambient Temperature max (°C)	50
Case Temperature (°C)	90

Dimensions	
Wiring diagram – see example K on page 19-30	
Casing length (in)	6.02
Casing width (in)	1.57
Casing height (in)	1.20
Mounting Dims (in)	5.51
Weight (lb)	0.74
Lead Exit Type	Side
Input wire length (in)	8.46
Output wire length (in)	8.46

66872 –

Constant Current, Class 2 Compliance

18W LED Driver. 350mA. TE Dimming. Bottom Feed.

General characteristics

Input Voltage (V)	120-277
Input Frequency (Hz)	50-60
Efficiency (%)	85
Output Type	DC
Output Current (mA)	350
Output Voltage Range (V)	4.0-52.0
Output Wattage Range (W)	1.4-18.2
Dimmability	Trailing Edge
Ambient Temperature min (°C)	-25
Ambient Temperature max (°C)	50
Case Temperature (°C)	90

Dimensions

Wiring diagram – see example K on page 19-30

Casing length (in)	5.33
Casing width (in)	1.67
Casing height (in)	1.32
Mounting Dims (in)	2.0
Weight (lb)	0.75
Lead Exit Type	Bottom
Input wire length (in)	6.0
Output wire length (in)	6.0

66883 –

Constant Current, Class 2 Compliance

18W LED Driver. 700mA. TE Dimming. Bottom Feed.

General characteristics

Input Voltage (V)	120-277
Input Frequency (Hz)	50-60
Efficiency (%)	83
Output Type	DC
Output Current (mA)	700
Output Voltage Range (V)	4.0-26.0
Output Wattage Range (W)	2.8-18.2
Dimmability	Trailing Edge
Ambient Temperature min (°C)	-25
Ambient Temperature max (°C)	50
Case Temperature (°C)	90

Dimensions

Wiring diagram – see example K on page 19-30

Casing length (in)	5.33
Casing width (in)	1.67
Casing height (in)	1.32
Mounting Dims (in)	2.0
Weight (lb)	0.75
Lead Exit Type	Bottom
Input wire length (in)	6.0
Output wire length (in)	6.0

66884 –

Constant Current, Class 2 Compliance

18W LED Driver. 700mA. TE Dimming.

General characteristics

Input Voltage (V)	120-277
Input Frequency (Hz)	50-60
Efficiency (%)	83
Output Type	DC
Output Current (mA)	700
Output Voltage Range (V)	4.0-26.0
Output Wattage Range (W)	2.8-18.2
Dimmability	Trailing Edge
Ambient Temperature min (°C)	-25
Ambient Temperature max (°C)	50
Case Temperature (°C)	90

Dimensions

Wiring diagram – see example K on page 19-30

Casing length (in)	6.02
Casing width (in)	1.57
Casing height (in)	1.20
Mounting Dims (in)	5.51
Weight (lb)	0.74
Lead Exit Type	Side
Input wire length (in)	8.46
Output wire length (in)	8.46

66902 –

Constant Current, Class 2 Compliance

26W LED Driver. 500mA. TE Dimming.

General characteristics	
Input Voltage (V)	120-277
Input Frequency (Hz)	50-60
Efficiency (%)	86
Output Type	DC
Output Current (mA)	500
Output Voltage Range (V)	4.0-52.0
Output Wattage Range (W)	2.0-26.0
Dimmability	Trailing Edge
Ambient Temperature min (°C)	-25
Ambient Temperature max (°C)	50
Case Temperature (°C)	90

Dimensions	
Wiring diagram – see example K on page 19-30	
Casing length (in)	6.02
Casing width (in)	1.57
Casing height (in)	1.20
Mounting Dims (in)	5.51
Weight (lb)	0.74
Lead Exit Type	Side
Input wire length (in)	8.46
Output wire length (in)	8.46

66903 –

Constant Current, Class 2 Compliance

26W LED Driver. 500mA. TE Dimming. Bottom Feed.

General characteristics	
Input Voltage (V)	120-277
Input Frequency (Hz)	50-60
Efficiency (%)	86
Output Type	DC
Output Current (mA)	500
Output Voltage Range (V)	4.0-52.0
Output Wattage Range (W)	2.0-26.0
Dimmability	Trailing Edge
Ambient Temperature min (°C)	-25
Ambient Temperature max (°C)	50
Case Temperature (°C)	90

Dimensions	
Wiring diagram – see example K on page 19-30	
Casing length (in)	5.33
Casing width (in)	1.67
Casing height (in)	1.32
Mounting Dims (in)	2.0
Weight (lb)	0.75
Lead Exit Type	Bottom
Input wire length (in)	6.0
Output wire length (in)	6.0

66904 –

Constant Current, Class 2 Compliance

36W LED Driver. 700mA. TE Dimming.

General characteristics	
Input Voltage (V)	120-277
Input Frequency (Hz)	50-60
Efficiency (%)	88
Output Type	DC
Output Current (mA)	700
Output Voltage Range (V)	4.0-52.0
Output Wattage Range (W)	2.8-36.4
Dimmability	Trailing Edge
Ambient Temperature min (°C)	-25
Ambient Temperature max (°C)	50
Case Temperature (°C)	90

Dimensions	
Wiring diagram – see example K on page 19-30	
Casing length (in)	6.02
Casing width (in)	1.57
Casing height (in)	1.20
Mounting Dims (in)	5.51
Weight (lb)	0.74
Lead Exit Type	Side
Input wire length (in)	8.46
Output wire length (in)	8.46

66905 –

Constant Current, Class 2 Compliance

36W LED Driver. 700mA. TE Dimming. Bottom Feed.

General characteristics	
Input Voltage (V)	120-277
Input Frequency (Hz)	50-60
Efficiency (%)	88
Output Type	DC
Output Current (mA)	700
Output Voltage Range (V)	4.0-52.0
Output Wattage Range (W)	2.8-36.4
Dimmability	Trailing Edge
Ambient Temperature min (°C)	-25
Ambient Temperature max (°C)	50
Case Temperature (°C)	90

Dimensions	
Wiring diagram – see example K on page 19-30	
Casing length (in)	5.33
Casing width (in)	1.67
Casing height (in)	1.32
Mounting Dims (in)	2.0
Weight (lb)	0.75
Lead Exit Type	Bottom
Input wire length (in)	6.0
Output wire length (in)	6.0

66885 –

Constant Current, Class 2 Compliance

18W LED Driver. 350mA. LE/TE Dimming.

General characteristics	
Input Voltage (V)	120
Input Frequency (Hz)	60
Efficiency (%)	76
Output Type	DC
Output Current (mA)	350
Output Voltage Range (V)	5.6-42.0
Output Wattage Range (W)	1.96-14.7
Dimmability	Leading/Trailing Edge
Ambient Temperature min (°C)	-25
Ambient Temperature max (°C)	50
Case Temperature (°C)	80

Dimensions	
Wiring diagram – see example K on page 19-30	
Casing length (in)	7.80
Casing width (in)	1.73
Casing height (in)	1.18
Mounting Dims (in)	7.48x1.34
Weight (lb)	0.75
Lead Exit Type	Side
Input wire length (in)	6.3
Output wire length (in)	10.6

66886 –

Constant Current, Class 2 Compliance

18W LED Driver. 350mA. LE/TE Dimming. Bottom Feed.

General characteristics	
Input Voltage (V)	120
Input Frequency (Hz)	60
Efficiency (%)	76
Output Type	DC
Output Current (mA)	350
Output Voltage Range (V)	5.6-42.0
Output Wattage Range (W)	1.96-14.7
Dimmability	Leading/Trailing Edge
Ambient Temperature min (°C)	-25
Ambient Temperature max (°C)	50
Case Temperature (°C)	80

Dimensions	
Wiring diagram – see example K on page 19-30	
Casing length (in)	7.40
Casing width (in)	1.73
Casing height (in)	1.22
Mounting Dims (in)	2.0
Weight (lb)	0.75
Lead Exit Type	Bottom
Input wire length (in)	7.1
Output wire length (in)	7.1

66887 –

Constant Current, Class 2 Compliance

26W LED Driver. 500mA. LE/TE Dimming.

General characteristics

Input Voltage (V)	120
Input Frequency (Hz)	60
Efficiency (%)	76
Output Type	DC
Output Current (mA)	500
Output Voltage Range (V)	5.6-42.0
Output Wattage Range (W)	2.8-21.0
Dimmability	Leading/Trailing Edge
Ambient Temperature min (°C)	-25
Ambient Temperature max (°C)	50
Case Temperature (°C)	80

Dimensions

Wiring diagram – see example K on page 19-30

Casing length (in)	7.80
Casing width (in)	1.73
Casing height (in)	1.18
Mounting Dims (in)	7.48x1.34
Weight (lb)	0.75
Lead Exit Type	Side
Input wire length (in)	6.3
Output wire length (in)	10.6

66898 –

Constant Current, Class 2 Compliance

36W LED Driver. 700mA. LE/TE Dimming.

General characteristics

Input Voltage (V)	120
Input Frequency (Hz)	60
Efficiency (%)	76
Output Type	DC
Output Current (mA)	700
Output Voltage Range (V)	5.6-42.0
Output Wattage Range (W)	3.92-29.4
Dimmability	Leading/Trailing Edge
Ambient Temperature min (°C)	-25
Ambient Temperature max (°C)	50
Case Temperature (°C)	80

Dimensions

Wiring diagram – see example K on page 19-30

Casing length (in)	7.80
Casing width (in)	1.73
Casing height (in)	1.18
Mounting Dims (in)	7.48x1.34
Weight (lb)	0.75
Lead Exit Type	Side
Input wire length (in)	6.3
Output wire length (in)	10.6

66899 –

Constant Current, Class 2 Compliance

36W LED Driver. 700mA. LE/TE Dimming. Bottom Feed.

General characteristics

Input Voltage (V)	120
Input Frequency (Hz)	60
Efficiency (%)	76
Output Type	DC
Output Current (mA)	700
Output Voltage Range (V)	5.6-42.0
Output Wattage Range (W)	3.92-29.4
Dimmability	Leading/Trailing Edge
Ambient Temperature min (°C)	-25
Ambient Temperature max (°C)	50
Case Temperature (°C)	80

Dimensions

Wiring diagram – see example K on page 19-30

Casing length (in)	7.40
Casing width (in)	1.73
Casing height (in)	1.22
Mounting Dims (in)	2.0
Weight (lb)	0.75
Lead Exit Type	Bottom
Input wire length (in)	7.1
Output wire length (in)	7.1

93861 –

Constant Current, Class 2 Compliance

30W LED Selectable Driver. 700/1400 mA. 0-10V. Bottom Feed.

General characteristics	
Input Voltage (V)	120-277
Input Frequency (Hz)	50-60
Efficiency (%)	>85
Output Type	DC
Output Current (mA)	700 and 1400
Output Voltage Range (V)	3-43
Output Wattage Range (W)	30
Dimmability	0-10V
Ambient Temperature min (°C)	-20
Ambient Temperature max (°C)	50
Case Temperature (°C)	75

Dimensions	
Wiring diagram – see example D on page 19-30	
Casing length (in)	3.74
Casing width (in)	1.75
Casing height (in)	1.18
Mounting Dims (in)	
Weight (lb)	0.65
Lead Exit Type	Bottom
Input wire length (in)	8.65
Output wire length (in)	8.65

93862 –

Constant Current, Class 2 Compliance

30W LED Selectable Driver. 700/1400 mA. 0-10V.

General characteristics	
Input Voltage (V)	120-277
Input Frequency (Hz)	50-60
Efficiency (%)	>85
Output Type	DC
Output Current (mA)	700 and 1400
Output Voltage Range (V)	3-43
Output Wattage Range (W)	30
Dimmability	0-10
Ambient Temperature min (°C)	-20
Ambient Temperature max (°C)	50
Case Temperature (°C)	75

Dimensions	
Wiring diagram – see example D on page 19-30	
Casing length (in)	3.74
Casing width (in)	1.75
Casing height (in)	1.18
Mounting Dims (in)	
Weight (lb)	0.65
Lead Exit Type	Side
Input wire length (in)	8.65
Output wire length (in)	8.65

66908 –

Constant Voltage, Class 2 Compliance

10W LED Driver. 12V. Non-Dimming. Terminal Blocks.

General characteristics	
Input voltage	120-240
Input frequency	50-60
Efficiency (%)	79
Output Type	DC
Output current (mA)	830
Output current range (mA)	10-830
Output voltage (V)	12
Output Wattage Range (W)	1.0-11.0
Ambient Temperature min (°C)	-25
Ambient Temperature max (°C)	50
Case Temperature (°C)	90

Dimensions	
Wiring diagram – see example B on page 19-30	
Casing length (in)	3.94
Casing width (in)	1.57
Casing height (in)	1.05
Mounting Dims (in)	3.54x1.18
Weight (lb)	0.21
Lead Exit Type	Terminals
Input wire length (in)	-
Output wire length (in)	-

66910 –

Constant Voltage, Class 2 Compliance

10W LED Driver. 24V. Non-Dimming. Terminal Blocks.

General characteristics	
Input voltage	120-240
Input frequency	50-60
Efficiency (%)	80
Output Type	DC
Output current (mA)	410
Output current range (mA)	10-410
Output voltage (V)	24
Output Wattage Range (W)	1.0-10.8
Ambient Temperature min (°C)	-25
Ambient Temperature max (°C)	50
Case Temperature (°C)	90

Dimensions	
Wiring diagram – see example B on page 19-30	
Casing length (in)	3.94
Casing width (in)	1.57
Casing height (in)	1.05
Mounting Dims (in)	3.54x1.18
Weight (lb)	0.21
Lead Exit Type	Terminals
Input wire length (in)	-
Output wire length (in)	-

66912 –

Constant Voltage, Class 2 Compliance

10W LED Driver. 24V. Non-Dimming. Plug-In.

General characteristics

Input voltage	120
Input frequency	50-60
Efficiency (%)	80
Output Type	DC
Output current (mA)	410
Output current range (mA)	10-410
Output voltage (V)	24
Output Wattage Range (W)	1.0-10.8
Ambient Temperature min (°C)	-25
Ambient Temperature max (°C)	50
Case Temperature (°C)	-

Dimensions

Wiring diagram – see example C on page 19-30

Casing length (in)	3.15
Casing width (in)	1.50
Casing height (in)	0.95
Mounting Dims (in)	-
Weight (lb)	0.53
Lead Exit Type	Plug-In
Input wire length (in)	-
Output wire length (in)	120

66913 –

Constant Voltage, Class 2 Compliance

25W LED Driver. 12V. Non-Dimming. Terminal Blocks.

General characteristics

Input voltage	120-277
Input frequency	50-60
Efficiency (%)	82
Output Type	DC
Output current (mA)	2000
Output current range (mA)	10-2000
Output voltage (V)	12
Output Wattage Range (W)	1.0-28.0
Ambient Temperature min (°C)	-25
Ambient Temperature max (°C)	50
Case Temperature (°C)	90

Dimensions

Wiring diagram – see example B on page 19-30

Casing length (in)	6.22
Casing width (in)	1.77
Casing height (in)	1.26
Mounting Dims (in)	5.35
Weight (lb)	0.59
Lead Exit Type	Terminals
Input wire length (in)	-
Output wire length (in)	-

66914 –

Constant Voltage, Class 2 Compliance

25W LED Driver. 12V. Non-Dimming.

General characteristics

Input voltage	120-277
Input frequency	50-60
Efficiency (%)	82
Output Type	DC
Output current (mA)	2000
Output current range (mA)	100-2000
Output voltage (V)	12
Output Wattage Range (W)	1.0-28.0
Ambient Temperature min (°C)	-25
Ambient Temperature max (°C)	50
Case Temperature (°C)	90

Dimensions

Wiring diagram – see example K on page 19-30

Casing length (in)	6.02
Casing width (in)	1.57
Casing height (in)	1.20
Mounting Dims (in)	5.51
Weight (lb)	0.64
Lead Exit Type	Side
Input wire length (in)	9.8
Output wire length (in)	9.8

66915 –

Constant Voltage, Class 2 Compliance

25W LED Driver. 12V. Non-Dimming. Signage.

General characteristics

Input voltage	120-277
Input frequency	50-60
Efficiency (%)	82
Output Type	DC
Output current (mA)	2000
Output current range (mA)	100-2000
Output voltage (V)	12
Output Wattage Range (W)	1.0-28.0
Ambient Temperature min (°C)	-25
Ambient Temperature max (°C)	50
Case Temperature (°C)	90

Dimensions

Wiring diagram – see example K on page 19-30

Casing length (in)	6.02
Casing width (in)	1.57
Casing height (in)	1.20
Mounting Dims (in)	5.51
Weight (lb)	0.64
Lead Exit Type	Side
Input wire length (in)	9.8
Output wire length (in)	9.8

66919 –

Constant Voltage, Class 2 Compliance

25W LED Driver. 24V. Non-Dimming. Terminal Blocks.

General characteristics	
Input voltage	120-277
Input frequency	50-60
Efficiency (%)	84
Output Type	DC
Output current (mA)	1000
Output current range (mA)	-
Output voltage (V)	24
Output Wattage Range (W)	0-24.6
Ambient Temperature min (°C)	-25
Ambient Temperature max (°C)	50
Case Temperature (°C)	90

Dimensions	
Wiring diagram – see example B on page 19-30	
Casing length (in)	6.22
Casing width (in)	1.77
Casing height (in)	1.26
Mounting Dims (in)	5.35
Weight (lb)	0.59
Lead Exit Type	Terminals
Input wire length (in)	-
Output wire length (in)	-

66921 –

Constant Voltage, Class 2 Compliance

25W LED Driver. 24V. Non-Dimming.

General characteristics	
Input voltage	120-277
Input frequency	50-60
Efficiency (%)	84
Output Type	DC
Output current (mA)	1000
Output current range (mA)	-
Output voltage (V)	24
Output Wattage Range (W)	0-24.6
Ambient Temperature min (°C)	-25
Ambient Temperature max (°C)	50
Case Temperature (°C)	90

Dimensions	
Wiring diagram – see example K on page 19-30	
Casing length (in)	6.02
Casing width (in)	1.57
Casing height (in)	1.20
Mounting Dims (in)	5.51
Weight (lb)	0.64
Lead Exit Type	Side
Input wire length (in)	18.5
Output wire length (in)	18.5

66922 –

Constant Voltage, Class 2 Compliance

25W LED Driver. 24V. Non-Dimming. Signage.

General characteristics	
Input voltage	120-277
Input frequency	50-60
Efficiency (%)	84
Output Type	DC
Output current (mA)	1000
Output current range (mA)	-
Output voltage (V)	24
Output Wattage Range (W)	0-24.6
Ambient Temperature min (°C)	-25
Ambient Temperature max (°C)	50
Case Temperature (°C)	90

Dimensions	
Wiring diagram – see example K on page 19-30	
Casing length (in)	6.02
Casing width (in)	1.57
Casing height (in)	1.20
Mounting Dims (in)	5.51
Weight (lb)	0.64
Lead Exit Type	Side
Input wire length (in)	18.5
Output wire length (in)	18.5

66923 –

Constant Voltage, Class 2 Compliance

60W LED Driver. 12V. Non-Dimming.

General characteristics	
Input voltage	120-277
Input frequency	50-60
Efficiency (%)	85
Output Type	DC
Output current (mA)	5000
Output current range (mA)	-
Output voltage (V)	12.3
Output Wattage Range (W)	0-67.5
Ambient Temperature min (°C)	-25
Ambient Temperature max (°C)	38
Case Temperature (°C)	90

Dimensions	
Wiring diagram – see example K on page 19-30	
Casing length (in)	7.80
Casing width (in)	1.73
Casing height (in)	1.57
Mounting Dims (in)	7.48 x 1.34
Weight (lb)	1.29
Lead Exit Type	Side
Input wire length (in)	8.5
Output wire length (in)	8.5

66925 –

Constant Voltage, Class 2 Compliance

60W LED Driver. 12V. Non-Dimming. Signage.

General characteristics	
Input voltage	120-277
Input frequency	50-60
Efficiency (%)	85
Output Type	DC
Output current (mA)	5000
Output current range (mA)	-
Output voltage (V)	12.3
Output Wattage Range (W)	0-67.5
Ambient Temperature min (°C)	-25
Ambient Temperature max (°C)	38
Case Temperature (°C)	90

Dimensions	
Wiring diagram – see example K on page 19-30	
Casing length (in)	7.80
Casing width (in)	1.73
Casing height (in)	1.57
Mounting Dims (in)	7.48 x 1.34
Weight (lb)	1.29
Lead Exit Type	Side
Input wire length (in)	8.5
Output wire length (in)	8.5

68660 –

Constant Voltage, Class 2 Compliance

60W LED Driver. 12V. Non-Dimming. White.

General characteristics	
Input voltage	120-277
Input frequency	50-60
Efficiency (%)	85
Output Type	DC
Output current (mA)	5000
Output current range (mA)	-
Output voltage (V)	12.3
Output Wattage Range (W)	0-67.5
Ambient Temperature min (°C)	-25
Ambient Temperature max (°C)	38
Case Temperature (°C)	90

Dimensions	
Wiring diagram – see example K on page 19-30	
Casing length (in)	7.80
Casing width (in)	1.73
Casing height (in)	1.57
Mounting Dims (in)	7.48 x 1.34
Weight (lb)	1.29
Lead Exit Type	Side
Input wire length (in)	8.5
Output wire length (in)	8.5

66926 –

Constant Voltage, Class 2 Compliance

60W LED Driver. 24V. Non-Dimming.

General characteristics	
Input voltage	120-277
Input frequency	50-60
Efficiency (%)	87
Output Type	DC
Output current (mA)	2500
Output current range (mA)	-
Output voltage (V)	24.5
Output Wattage Range (W)	0-66.0
Ambient Temperature min (°C)	-25
Ambient Temperature max (°C)	50
Case Temperature (°C)	90

Dimensions	
Wiring diagram – see example K on page 19-30	
Casing length (in)	7.80
Casing width (in)	1.73
Casing height (in)	1.57
Mounting Dims (in)	7.48 x 1.34
Weight (lb)	1.29
Lead Exit Type	Side
Input wire length (in)	8.5
Output wire length (in)	8.5

66927 –

Constant Voltage, Class 2 Compliance

60W LED Driver. 24V. Non-Dimming. White.

General characteristics	
Input voltage	120-277
Input frequency	50-60
Efficiency (%)	87
Output Type	DC
Output current (mA)	2500
Output current range (mA)	-
Output voltage (V)	24.5
Output Wattage Range (W)	0-66.0
Ambient Temperature min (°C)	-25
Ambient Temperature max (°C)	50
Case Temperature (°C)	90

Dimensions	
Wiring diagram – see example K on page 19-30	
Casing length (in)	7.80
Casing width (in)	1.73
Casing height (in)	1.57
Mounting Dims (in)	7.48 x 1.34
Weight (lb)	1.29
Lead Exit Type	Side
Input wire length (in)	8.5
Output wire length (in)	8.5

66930 –

Constant Voltage, Class 2 Compliance

100W CV LED Driver. 12V. Potted. Non-Dimming.

General characteristics	
Input voltage	120-277
Input frequency	50-60
Efficiency (%)	81
Output Type	DC
Output current (mA)	8300
Output current range (mA)	-
Output voltage (V)	12.3
Output Wattage Range (W)	0-112.0
Ambient Temperature min (°C)	-30
Ambient Temperature max (°C)	50
Case Temperature (°C)	90

Dimensions	
Wiring diagram – see example K on page 19-30	
Casing length (in)	9.05
Casing width (in)	2.60
Casing height (in)	1.65
Mounting Dims (in)	8.66 x 0.95
Weight (lb)	2.27
Lead Exit Type	Side
Input wire length (in)	18.7
Output wire length (in)	18.7

66931 –

Constant Voltage, Class 2 Compliance

100W CV LED Driver. 24V. Potted. Non-Dimming.

General characteristics	
Input voltage	120-277
Input frequency	50-60
Efficiency (%)	83
Output Type	DC
Output current (mA)	4200
Output current range (mA)	42-4200
Output voltage (V)	24.6
Output Wattage Range (W)	0-111.0
Ambient Temperature min (°C)	-30
Ambient Temperature max (°C)	50
Case Temperature (°C)	90

Dimensions	
Wiring diagram – see example K on page 19-30	
Casing length (in)	9.05
Casing width (in)	2.60
Casing height (in)	1.65
Mounting Dims (in)	8.66x0.95
Weight (lb)	2.27
Lead Exit Type	Side
Input wire length (in)	18.7
Output wire length (in)	18.7

Wiring Diagrams
LED Drivers and Halogen Transformers

A

B

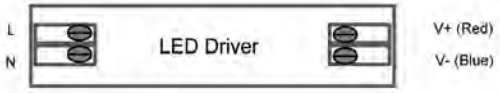

C

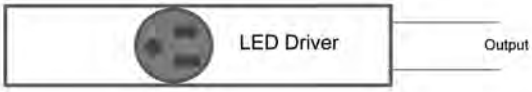

D

E

F

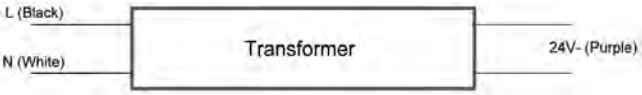

G

H

I

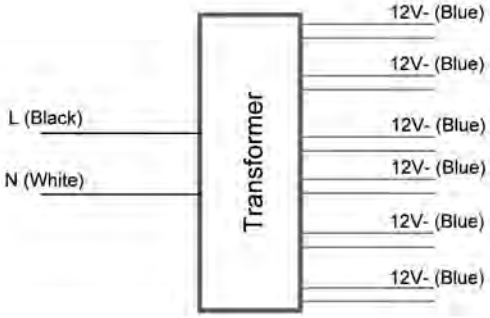

J

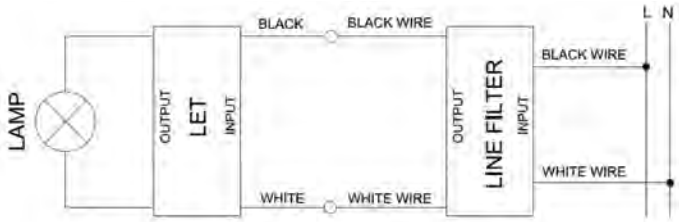

K

Table of Contents
LED Systems

Product Information

Refrigerated Display Lighting

Immersion™ RV60 LED Refrigerated Display Lighting for Vertical Cases (pg. 20-3)

- Up to 65% energy savings vs. T8 LFL Systems
- Up to 50,000 hour lifetime
- An innovative optic design directs light onto merchandise – where it belongs – instead of wasting it on the glass doors
- Cases achieve higher than average lux levels and up to 80% light uniformity across package facings
- The easily hidden light source eliminates distracting glare and light spillage, making aisles feel more spacious and your customers more comfortable

Immersion™ RH30 LED Refrigerated Display Lighting for Horizontal Cases (pg. 20-4)

- Up to 72% energy savings vs. T8 LFL Systems
- Up to 50,000 hour lifetime
- Our new Visual Comfort Lens™ diffuses the light, inhibiting LED hot spots from appearing on merchandise
- Canopy and undershelf lighting solutions work together to produce seamless uniform illumination
- An adjustable clip allows for rotation of the light bar, ensuring the light will angle precisely onto merchandise and bring out the full vibrancy of product packaging
- The slim profile is more discreet than fluorescent tubes, making sure customers see well-lit products and not the light source

Lumination™ LED Downlights (pg. 20-6)

The Lumination RS LED downlights install in just minutes into most four or six-inch recessed housings, making them ideal for use in both retrofit and new construction applications. The GE LED downlight delivers 700 or 1000 lumens at 70+ lumens per watt, bringing significant energy savings to residential, light commercial, and hospitality environments. All downlights in the RS family have instant-on, standard 120V dimming, and a uniform lit appearance, delivering premium performance in a compact, economical package.

- 5 years, limited systems warranty
- ENERGY STAR® qualified
- 35,000 hour life rating

LED Refrigerated Display Lighting
LED Systems

	Product Code (Single)	Product Code (10-Pack)	Description	Item	Color Temp (K)*	Light Output (Lumens)**	LPW	Lumens Per ft (m)	Life (Hours)	CRI (Min)	Power (Watts)***		Length (L)	Width (W)	Depth (D)
LED Refrigerated Display Lighting															
Immersion RV60 Series															
5000K	85742	85745	GELT604850CTR-SY/ SB	48" LED Light - Center	5000	896	80	222 (727)	50,000	80	11.2	(in) (mm)	48.53 1232.6	2.58 65.5	1.28 32.5
5000K	85744 85743	85747 85746	GELT604850EDL-SY/ SB GELT604850EDR-SY/ SB	48" LED Light - Left End 48" LED Light - Right End	5000	559	81	138 (454)	50,000	80	6.9	(in) (mm)	48.53 1232.6	2.09 53.1	1.59 40.4
5000K	85699	85702	GELT606050CTR-SY / SB	60" LED Light - Center	5000	1020	73	203 (665)	50,000	80	13.9	(in) (mm)	60.36 1533.1	2.58 65.5	1.28 32.5
5000K	85701 85700	85704 85703	GELT606050EDL-SY / SB GELT606050EDR-SY / SB	60" LED Light - Left End 60" LED Light - Right End	5000	569	81	113 (371)	50,000	80	7.0	(in) (mm)	60.36 1533.1	2.09 53.1	1.59 40.4
5000K	85717	85722	GELT606750CTR-SY / SB	67" LED Light - Center	5000	1227	80	218 (716)	50,000	80	15.4	(in) (mm)	67.47 1713.76	2.58 65.5	1.28 32.5
5000K	85721 85720	85724 85723	GELT606750EDL-SY / SB GELT606750EDR-SY / SB	67" LED Light - Left End 67" LED Light - Right End	5000	745	85	133 (435)	50,000	80	8.8	(in) (mm)	67.47 1713.76	2.09 53.1	1.59 40.4
4000K	85748	85751	GELT604840CTR-SY/ SB	48" LED Light - Center	4000	844	76	209 (685)	50,000	80	11.2	(in) (mm)	48.53 1232.6	2.58 65.5	1.28 32.5
4000K	85750 85749	85753 85752	GELT604840EDL-SY/ SB GELT604840EDR-SY/ SB	48" LED Light - Left End 48" LED Light - Right End	4000	534	77	132 (433)	50,000	80	6.9	(in) (mm)	48.53 1232.6	2.09 53.1	1.59 40.4
4000K	85705	85708	GELT606040CTR-SY / SB	60" LED Light - Center	4000	1023	74	203 (667)	50,000	80	13.9	(in) (mm)	60.36 1533.1	2.58 65.5	1.28 32.5
4000K	85707 85706	85710 85709	GELT606040EDL-SY /SB GELT606040EDR-SY / SB	60" LED Light - Left End 60" LED Light - Right End	4000	577	82	115 (376)	50,000	80	7.0	(in) (mm)	60.36 1533.1	2.09 53.1	1.59 40.4
4000K	85725	85728	GELT606740CTR-SY / SB	67" LED Light - Center	4000	1142	74	203 (666)	50,000	80	15.4	(in) (mm)	67.47 1713.76	2.58 65.5	1.28 32.5
4000K	85727 85726	85735 85734	GELT606740EDL-SY / SB GELT606740EDR-SY / SB	67" LED Light - Left End 67" LED Light - Right End	4000	683	78	121 (399)	50,000	80	8.8	(in) (mm)	67.47 1713.76	2.09 53.1	1.59 40.4
3500K	85754	85757	GELT604835CTR-SY/ SB	48" LED Light - Center	3500	813	73	201 (660)	50,000	80	11.2	(in) (mm)	48.53 1232.6	2.58 65.5	1.28 32.5
3500K	85756 85755	85759 85758	GELT604835EDL-SY/ SB GELT604835EDR-SY/ SB	48" LED Light - Left End 48" LED Light - Right End	3500	500	72	124 (406)	50,000	80	6.9	(in) (mm)	48.53 1232.6	2.09 53.1	1.59 40.4
3500K	85711	85714	GELT606035CTR-SY / SB	60" LED Light - Center	3500	908	65	181 (592)	50,000	80	13.9	(in) (mm)	60.36 1533.1	2.58 65.5	1.28 32.5
3500K	85713 85712	85716 85715	GELT606035EDL-SY / SB GELT606035EDR-SY / SB	60" LED Light - Left End 60" LED Light - Right End	3500	516	74	103 (337)	50,000	80	7.0	(in) (mm)	60.36 1533.1	2.09 53.1	1.59 40.4
3500K	85736	85739	GELT606735CTR-SY / SB	67" LED Light - Center	3500	1105	72	197 (645)	50,000	80	15.4	(in) (mm)	67.47 1713.76	2.58 65.5	1.28 32.5
3500K	85738 85737	85741 85740	GELT606735EDL-SY / SB GELT606735EDR-SY / SB	67" LED Light - Left End 67" LED Light - Right End	3500	667	76	119 (389)	50,000	80	8.8	(in) (mm)	67.47 1713.76	2.09 53.1	1.59 40.4

* Color temp (CCT) +/- 10%
**Based on typical in-store conditions.
***System AC watts based on typical in-store conditions.

Product Code	Description	Item		Length (L)	Width (W)	Depth (D)
Accessories						
LED Drivers						
13798	GEPS6100NCCON-SY	100W LED Driver	(in)	10.75	1.65	1.1
			(mm)	273	42	28
68595	GEPS6500NCMUL-SY	50W LED Driver	(in)	10.75	1.65	1.1
			(mm)	273	42	28
79814	GE-CV-4060CTR	Wire Cover	(in)	1.77	1.42	1.19
			(mm)	45.01	36	30.23

LED Refrigerated Display Lighting
LED Systems

	Product Code	Description	Package Quantity	Item	Color Temp (K)**	Light Output (Lumens)*	LPW	Lumens Per ft	Life (Hours)	CRI (Min)	Power (Watts)*		Length (L)	Width (W)	Depth (D)
	LED Refrigerated Display Lighting														
	Immersion RH30 LED Standard Series														
5000K	69644	48" Canopy	1	GEMT304850CAN-SY	5000	1440	67	360	50,000	80	21.5	(in)	45.0	1.3	0.9
	69645		10	GEMT304850CAN-SB								mm)	1144.0	33.7	23.2
	69650	48" Undershelf	1	GEMT304850USL-SY	5000	500	70	125	50,000	80	7.1	(in)	45.0	1.3	0.9
	69651		10	GEMT304850USL-SB								mm)	1144.0	33.7	23.2
	69642	36" Canopy	1	GEMT303650CAN-SY	5000	1078	68	359	50,000	80	15.9	(in)	34.4	1.3	0.9
	69643		10	GEMT303650CAN-SB								mm)	874.0	33.7	23.2
	69648	36" Undershelf	1	GEMT303650USL-SY	5000	371	69	124	50,000	80	5.4	(in)	34.4	1.3	0.9
	69649		10	GEMT303650USL-SB								mm)	874.0	33.7	23.2
	69640	24" Canopy	1	GEMT302450CAN-SY	5000	737	71	369	50,000	80	10.4	(in)	23.8	1.3	0.9
	69641		10	GEMT302450CAN-SB								mm)	604.0	33.7	23.2
	69646	24" Undershelf	1	GEMT302450USL-SY	5000	245	68	123	50,000	80	3.6	(in)	23.8	1.3	0.9
	69647		10	GEMT302450USL-SB								mm)	604.0	33.7	23.2
4000K	69662	48" Canopy	1	GEMT304840CAN-SY	4000	1400	65	350	50,000	80	21.5	(in)	45.0	1.3	0.9
	69663		10	GEMT304840CAN-SB								mm)	1144.0	33.7	23.2
	69668	48" Undershelf	1	GEMT304840USL-SY	4000	560	79	140	50,000	80	7.1	(in)	45.0	1.3	0.9
	69669		10	GEMT304840USL-SB								mm)	1144.0	33.7	23.2
	69660	36" Canopy	1	GEMT303640CAN-SY	4000	1020	64	340	50,000	80	15.9	(in)	34.4	1.3	0.9
	69661		10	GEMT303640CAN-SB								mm)	874.0	33.7	23.2
	69666	36" Undershelf	1	GEMT303640USL-SY	4000	420	78	140	50,000	80	5.4	(in)	34.4	1.3	0.9
	69667		10	GEMT303640USL-SB								mm)	874.0	33.7	23.2
	69652	24" Canopy	1	GEMT302440CAN-SY	4000	773	74	387	50,000	80	10.4	(in)	23.8	1.3	0.9
	69653		10	GEMT302440CAN-SB								mm)	604.0	33.7	23.2
	69664	24" Undershelf	1	GEMT302440USL-SY	4000	240	67	120	50,000	80	3.6	(in)	23.8	1.3	0.9
	69665		10	GEMT302440USL-SB								mm)	604.0	33.7	23.2
3500K	69713	48" Canopy	1	GEMT304835CAN-SY	3500	1300	60	325	50,000	80	21.5	(in)	45.0	1.3	0.9
	69714		10	GEMT304835CAN-SB								mm)	1144.0	33.7	23.2
	69719	48" Undershelf	1	GEMT304835USL-SY	3500	515	73	129	50,000	80	7.1	(in)	45.0	1.3	0.9
	69720		10	GEMT304835USL-SB								mm)	1144.0	33.7	23.2
	69711	36" Canopy	1	GEMT303635CAN-SY	3500	960	60	320	50,000	80	15.9	(in)	34.4	1.3	0.9
	69712		10	GEMT303635CAN-SB								mm)	874.0	33.7	23.2
	69717	36" Undershelf	1	GEMT303635USL-SY	3500	385	71	128	50,000	80	5.4	(in)	34.4	1.3	0.9
	69718		10	GEMT3036350USL-SB								mm)	874.0	33.7	23.2
	69709	24" Canopy	1	GEMT302435CAN-SY	3500	738	71	369	50,000	80	10.4	(in)	23.8	1.3	0.9
	69710		10	GEMT302435CAN-SB								mm)	604.0	33.7	23.2
	69715	24" Undershelf	1	GEMT302435USL-SY	3500	250	69	125	50,000	80	3.6	(in)	23.8	1.3	0.9
	69716		10	GEMT302435USL-SB								mm)	604.0	33.7	23.2
3000K	69687	48" Canopy	1	GEMT304830CAN-SY	3000	1200	56	300	50,000	80	21.5	(in)	45.0	1.3	0.9
	69688		10	GEMT304830CAN-SB								mm)	1144.0	33.7	23.2
	69695	48" Undershelf	1	GEMT304830USL-SY	3000	450	63	113	50,000	80	7.1	(in)	45.0	1.3	0.9
	69696		10	GEMT304830USL-SB								mm)	1144.0	33.7	23.2
	69685	36" Canopy	1	GEMT303630CAN-SY	3000	900	57	300	50,000	80	15.9	(in)	34.4	1.3	0.9
	69686		10	GEMT303630CAN-SB								mm)	874.0	33.7	23.2
	69691	36" Undershelf	1	GEMT303630USL-SY	3000	350	65	117	50,000	80	5.4	(in)	34.4	1.3	0.9
	69694		10	GEMT303630USL-SB								mm)	874.0	33.7	23.2
	69682	24" Canopy	1	GEMT302430CAN-SY	3000	600	58	300	50,000	80	10.4	(in)	23.8	1.3	0.9
	69684		10	GEMT302430CAN-SB								mm)	604.0	33.7	23.2
	69689	24" Undershelf	1	GEMT302430USL-SY	3000	150	42	75	50,000	80	3.6	(in)	23.8	1.3	0.9
	69690		10	GEMT302430USL-SB								mm)	604.0	33.7	23.2

*Lumens and DC watts based on typical in-store installed conditions.
**Color temp, lumens, LPW, and watts +/-10%.

LED Refrigerated Display Lighting
LED Systems

	Product Code	Description	Package Quantity	Item	Color Temp (K)**	Light Output (Lumens)*	LPW	Lumens Per ft	Life (Hours)	CRI (Min)	Power (Watts)*		Length (L)	Width (W)	Depth (D)
	LED Refrigerated Display Lighting (continued)														
	Immersion RH30 LED Premium Series														
4000K	69674	48" Canopy	1	GEMT314840CAN-SY	4000	937	44	234	50,000	75	21.5	(in)	45.7	1.3	0.9
	69675		10	GEMT314840CAN-SB								mm)	1160.0	33.7	23.2
	69680	48" Undershelf	1	GEMT314840USL-SY	4000	357	50	89	50,000	75	7.1	(in)	45.7	1.3	0.9
	69681		10	GEMT314840USL-SB								mm)	1160.0	33.7	23.2
	69672	36" Canopy	1	GEMT313640CAN-SY	4000	730	46	243	50,000	75	15.9	(in)	35.0	1.3	0.9
	69673		10	GEMT313640CAN-SB								mm)	890.0	33.7	23.2
	69678	36" Undershelf	1	GEMT313640USL-SY	4000	274	51	91	50,000	75	5.4	(in)	35.0	1.3	0.9
	69679		10	GEMT313640USL-SB								mm)	890.0	33.7	23.2
	69670	24" Canopy	1	GEMT312440CAN-SY	4000	481	46	160	50,000	75	10.4	(in)	23.8	1.3	0.9
	69671		10	GEMT312440CAN-SB								mm)	604.0	33.7	23.2
	69676	24" Undershelf	1	GEMT312440USL-SY	4000	181	50	60	50,000	75	3.6	(in)	23.8	1.3	0.9
	69677		10	GEMT312440USL-SB								mm)	604.0	33.7	23.2
3000K	69701	48" Canopy	1	GEMT314830CAN-SY	3000	812	38	203	50,000	72	21.5	(in)	45.7	1.3	0.9
	69702		10	GEMT314830CAN-SB								mm)	1160.0	33.7	23.2
	69707	48" Undershelf	1	GEMT314830USL-SY	3000	320	45	80	50,000	72	7.1	(in)	45.7	1.3	0.9
	69708		10	GEMT314830USL-SB								mm)	1160.0	33.7	23.2
	69699	36" Canopy	1	GEMT313630CAN-SY	3000	630	40	158	50,000	72	15.9	(in)	35.0	1.3	0.9
	69700		10	GEMT313630CAN-SB								mm)	890.0	33.7	23.2
	69705	36" Undershelf	1	GEMT313630USL-SY	3000	242	45	61	50,000	72	5.4	(in)	35.0	1.3	0.9
	69706		10	GEMT313630USL-SB								mm)	890.0	33.7	23.2
	69697	24" Canopy	1	GEMT312430CAN-SY	3000	427	41	142	50,000	72	10.4	(in)	23.8	1.3	0.9
	69698		10	GEMT312430CAN-SB								mm)	604.0	33.7	23.2
	69703	24" Undershelf	1	GEMT312430USL-SY	3000	160	44	53	50,000	72	3.6	(in)	23.8	1.3	0.9
	69704		10	GEMT312430USL-SB								mm)	604.0	33.7	23.2

*Lumens and DC watts based on typical in-store installed conditions.
**Color temp, lumens, LPW, and watts +/-10%.

Product Code	Description	Item		Length (L)	Width (W)	Depth (D)
Accessories						
LED Drivers						
13798	GEPS6100NCCON-SY	100W LED Driver	(in)	10.75	1.65	1.1
			(mm)	273	42	28
68595	GEPS6500NCMUL-SY	50W LED Driver	(in)	10.75	1.65	1.1
			(mm)	273	42	28
Mounting Clips						
69721	GEMT3000NCM1-SY	Universal Mounting Clip - L	(in)	1.058	1.024	1.18
69723	GEMT3000NCM1-SB		(mm)	27	26	29.9

Lumination™ LED Downlights
LED Systems

Product Code	Description	Recessed Can Size	CCT	Base Type	CRI	Lumens	Watts	LPW	Rated Life L70 (Hrs.)	Dimmable	Location Rating	Base Attachment
Lumination™ LED Downlights												
4-Inch LED Downlights												
95853	LED10RS4/827E26P	4"	2700K	E26	80	700	10	70	35,000	Yes	Damp	Pigtail
95854	LED10RS4/830E26P	4"	3000K	E26	80	700	10	70	35,000	Yes	Damp	Pigtail
95855	LED10RS4/827GUP	4"	2700K	GU24	80	700	10	70	35,000	Yes	Damp	Pigtail
95856	LED10RS4/830GUP	4"	3000K	GU24	80	700	10	70	35,000	Yes	Damp	Pigtail
6-Inch LED Downlights												
85153	LED10RS6/827E26P	6"	2700K	E26	80	700	10	70	35,000	Yes	Damp	Pigtail
85160	LED10RS6/830E26P	6"	3000K	E26	80	700	10	70	35,000	Yes	Damp	Pigtail
95851	LED10RS6/827GUP	6"	2700K	GU24	80	700	10	70	35,000	Yes	Damp	Pigtail
95852	LED10RS6/830GUP	6"	3000K	GU24	80	700	10	70	35,000	Yes	Damp	Pigtail
70120	LED13RS6/827E26P	6"	2700K	E26	80	1,000	13	75	35,000	Yes	Damp	Pigtail
70122	LED13RS6/830E26P	6"	3000K	E26	80	1,000	13	75	35,000	Yes	Damp	Pigtail
70124	LED13RS6/827GUP	6"	2700K	GU26	80	1,000	13	75	35,000	Yes	Damp	Pigtail
70127	LED13RS6/830GUP	6"	3000K	GU26	80	1,000	13	75	35,000	Yes	Damp	Pigtail

Table of Contents
Controls

Introduction

The design of the room and the amount of activity happening within the space will determine the level of sensitivity you need in your sensor. GE Aware™ Occupancy Sensors are available in three distinct technologies, so that you can be sure to find the appropriate solution for your space.

Ultrasonic (US)

Ultrasonic sensors detect occupancy by emitting a high-frequency signal and interpreting changes in frequency as motion. Ultrasonic sensors do not require a direct line of sight, meaning they can "see" around corners and objects. They are also highly sensitive to motion – even minor hand movement. They are most suitable for open spaces, spaces with obstacles in the sensor's line of sight, restrooms and spaces with hard surfaces.

Passive Infrared (PIR)

Designed to detect motion from a heat-emitting source, PIR sensors switch lights On and Off when a person enters or exits their field of view. They are best for applications that offer a direct line of sight to the source that creates the motion, such as enclosed spaces, areas where the sensor has a view of activity, outdoor areas and warehouse aisles.

Dual Tech (DT)

Dual Tech sensors combine PIR and ultrasonic technology. Lights are only activated when both sensors detect occupancy – eliminating false activation – and require one of the technologies to keep the lights on, significantly reducing the possibility of a false deactivation. They are suited for classrooms, conference rooms, areas with heavy airflow or other conditions where a higher degree of detection is preferred.

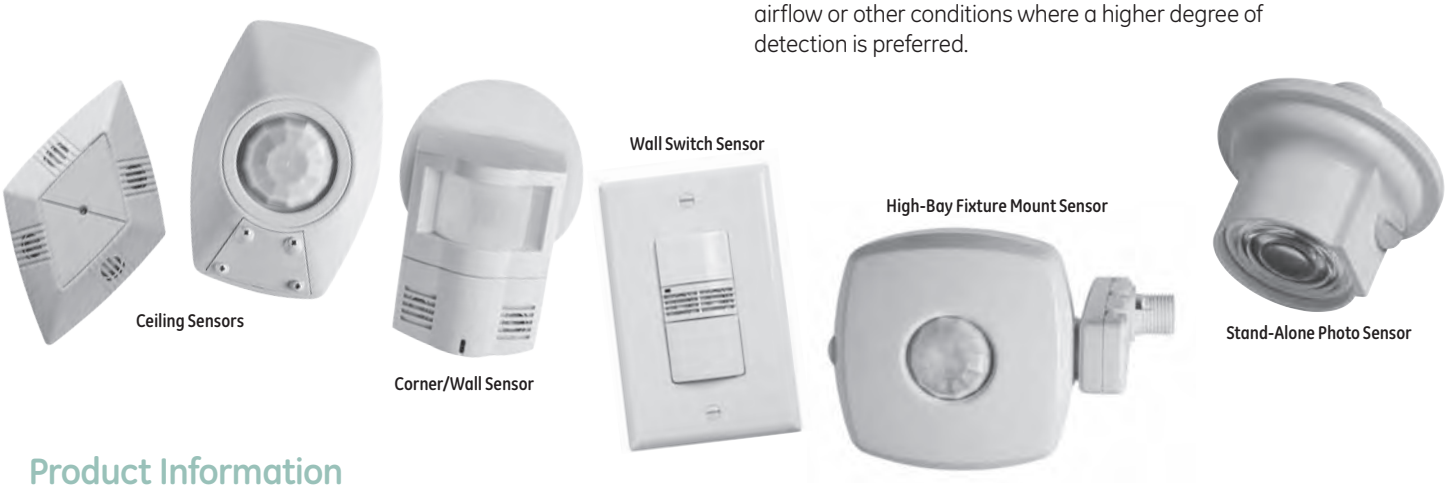

Product Information

Occupancy Sensors

Ceiling (pg. 21-3)

- Ultrasonic, Infrared and Dual Tech sensing
- 180- or 360-degree viewing area
- Small, medium or large room options
- Photocell capability
- Form C relay
- Extreme temperature and open air options (max. height 25')

Corner/Wall (pg. 21-3)

- Infrared and Dual Tech sensing
- 180-degree viewing area
- Photocell capability
- Long (hallway) or wide (room) composition
- Form C relay

Wall Switch (pg. 21-3)

- Infrared and Dual Tech sensing
- Line voltage (directly replaces wall switch) or low voltage (for switchpacks or GE LightSweep™)
- Single or dual relay
- Photocell capability
- Five colors available: white, ivory, light almond, gray, black

High-Bay Fixture Mount (pg. 21-4)

- Fixture mount
- Passive Infrared
- Line voltage (120–277V)
- Single and dual relay options
- Optional photocell

GE Aware™ Photo Sensors

Stand-Alone Photo Sensor (pg. 21-4)

- For retrofit applications (indoor use only)

Product Code	Description	Sensing Technology	Viewing Angle	Coverage Area	Additional Information
Occupancy Sensor					
GE Aware™ Ceiling Sensors - Low Voltage					
63270	CIR-05-360-D	PIR	360°	500 sq. ft.	with photocell
63272	CIR-15-360-D	PIR	360°	1500 sq. ft.	with photocell
63275	CUS-05-180	US	180°	500 sq. ft.	
63276	CUS-05-180-R	US	180°	500 sq. ft.	with aux. relay
63277	CUS-10-180	US	180°	1000 sq. ft.	
63278	CUS-10-180-R	US	180°	1000 sq. ft.	with aux. relay
63279	CUS-20-360	US	360°	2000 sq. ft.	
63280	CUS-20-360-R	US	360°	2000 sq. ft.	with aux. relay
63268	CDT-20-360-R	DT	360°	2000sq. ft.	with aux. relay
63273	CIR-15-360-D-T	PIR	360°	1500 sq. ft.	with photocell
63274	CIR-2H-360-D-T	PIR	360°	2 x mount height	with photocell
GE Aware™ Corner/Wall Sensors - Low Voltage					
63293	SIR-WIDE-D	PIR		1200 sq. ft.	with photocell
63292	SIR-WIDE	PIR		1200 sq. ft.	
63290	SIR-LONG	PIR		90 ft. linear	
63291	SIR-LONG-D	PIR		90 ft. linear	with photocell
63288	SDT-WIDE	DT		1200 sq. ft.	
63289	SDT-WIDE-D	DT		1200 sq. ft.	with photocell

Product Code	Description	Sensing Technology	Relay	Coverage Area	Voltage	Color	Additional Information
GE Aware™ Wall Switch Sensors - Line Voltage							
63295	WDT-10-SR-G-D-W	DT	Single	1000 sq. ft.	120/277	White	with photocell
63296	WDT-10-SR-G-D-V	DT	Single	1000 sq. ft.	120/277	Ivory	with photocell
63297	WDT-10-SR-G-D-A	DT	Single	1000 sq. ft.	120/277	Light Almond	with photocell
63298	WDT-10-SR-G-D-G	DT	Single	1000 sq. ft.	120/277	Gray	with photocell
63299	WDT-10-SR-G-D-B	DT	Single	1000 sq. ft.	120/277	Black	with photocell
63308	WDT-10-DR-G-D-W	DT	Dual	1000 sq. ft.	120/277	White	with photocell
63309	WDT-10-DR-G-D-V	DT	Dual	1000 sq. ft.	120/277	Ivory	with photocell
63313	WDT-10-DR-G-D-A	DT	Dual	1000 sq. ft.	120/277	Light Almond	with photocell
63314	WDT-10-DR-G-D-G	DT	Dual	1000 sq. ft.	120/277	Gray	with photocell
63315	WDT-10-DR-G-D-B	DT	Dual	1000 sq. ft.	120/277	Black	with photocell
63324	WIR-10-SR-G-D-W	PIR	Single	1000 sq. ft.	120/277	White	with photocell
63325	WIR-10-SR-G-D-V	PIR	Single	1000 sq. ft.	120/277	Ivory	with photocell
63326	WIR-10-SR-G-D-A	PIR	Single	1000 sq. ft.	120/277	Light Almond	with photocell
63327	WIR-10-SR-G-D-G	PIR	Single	1000 sq. ft.	120/277	Gray	with photocell
63328	WIR-10-SR-G-D-B	PIR	Single	1000 sq. ft.	120/277	Black	with photocell
63335	WIR-10-SR-C-D-W	PIR	Single	1000 sq. ft.	347	White	with photocell
63336	WIR-10-SR-C-D-V	PIR	Single	1000 sq. ft.	347	Ivory	with photocell
63337	WIR-10-SR-C-D-A	PIR	Single	1000 sq. ft.	347	Light Almond	with photocell
63338	WIR-10-SR-C-D-G	PIR	Single	1000 sq. ft.	347	Gray	with photocell
63339	WIR-10-SR-C-D-B	PIR	Single	1000 sq. ft.	347	Black	with photocell
63344	WIR-10-DR-G-D-W	PIR	Dual	1000 sq. ft.	120/277	White	with photocell
63345	WIR-10-DR-G-D-V	PIR	Dual	1000 sq. ft.	120/277	Ivory	with photocell
63346	WIR-10-DR-G-D-A	PIR	Dual	1000 sq. ft.	120/277	Light Almond	with photocell
63347	WIR-10-DR-G-D-G	PIR	Dual	1000 sq. ft.	120/277	Gray	with photocell
63348	WIR-10-DR-G-D-B	PIR	Dual	1000 sq. ft.	120/277	Black	with photocell

Product Code	Description	Sensing Technology	Viewing Angle	Color	Additional Information
Occupancy Sensor (continued)					
GE Aware™ Wall Switch Sensors - Low Voltage					
63393	WIR-10-LV-W	PIR	1000 sq. ft.	White	
63394	WIR-10-LV-V	PIR	1000 sq. ft.	Ivory	
63395	WIR-10-LV-A	PIR	1000 sq. ft.	Light Almond	
63396	WIR-10-LV-G	PIR	1000 sq. ft.	Gray	
63397	WIR-10-LV-B	PIR	1000 sq. ft.	Black	
63398	WIR-10-RR7-D-W	PIR	1000 sq. ft.	White	for RR7 Relay
63399	WIR-10-RR7-D-V	PIR	1000 sq. ft.	Ivory	for RR7 Relay
63401	WIR-10-RR7-D-A	PIR	1000 sq. ft.	Light Almond	for RR7 Relay
63403	WIR-10-RR7-D-G	PIR	1000 sq. ft.	Gray	for RR7 Relay
63405	WIR-10-RR7-D-B	PIR	1000 sq. ft.	Black	for RR7 Relay
GE Aware™ High-Bay Fixture Mount Sensors - Line Voltage					
64131	HB-12-SR	PIR	Single	120/277	
64132	HB-12-SR-D	PIR	Single	120/277	with photocell
64135	HB-12-DR	PIR	Dual	120/277	
64136	HB-12-DR-D	PIR	Dual	120/277	with photocell

Photo Sensor

GE Aware™ Stand-Alone Photo Sensor					
65368	PCD-IN-SA				

Coverage Diagrams

CIR-05-360-D

TOP VIEW

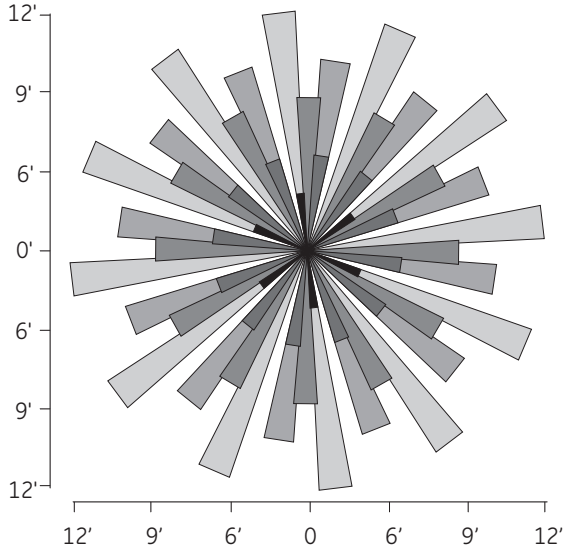

SIDE VIEW

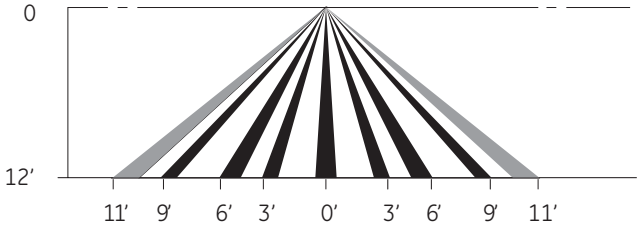

CIR-15-360-D

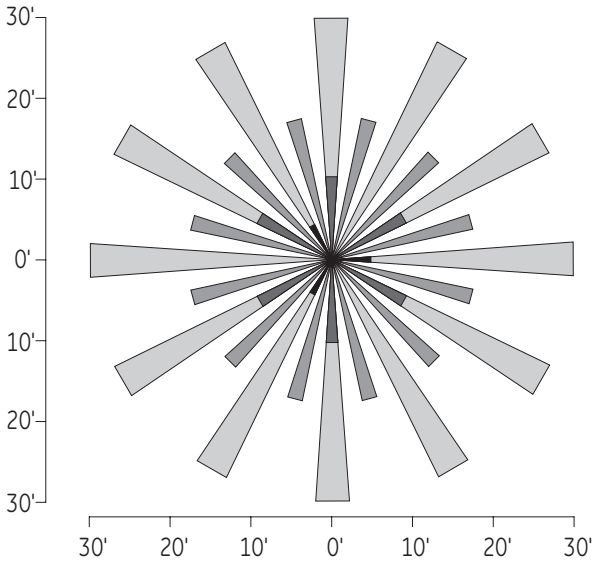

SIDE VIEW

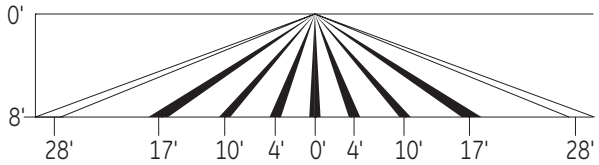

CUS-05-180(-R)

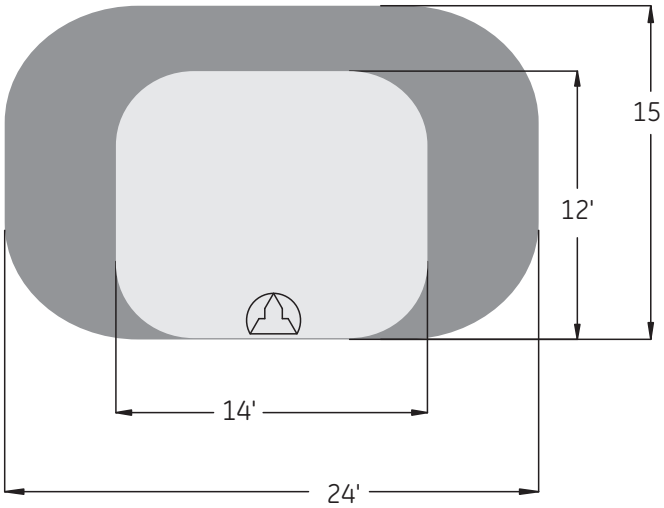

CUS-10-180(-R)

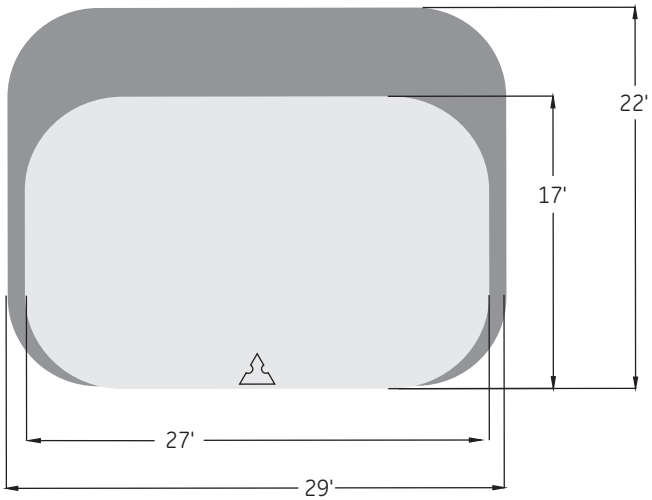

CUS-20-360(-R)

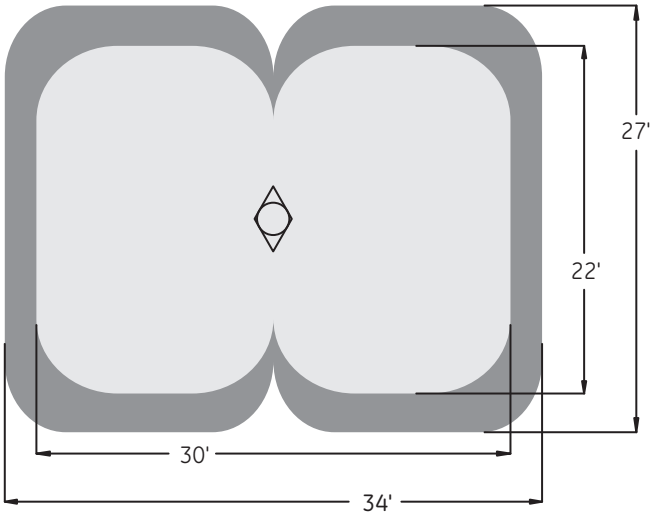

CDT-20-360-R

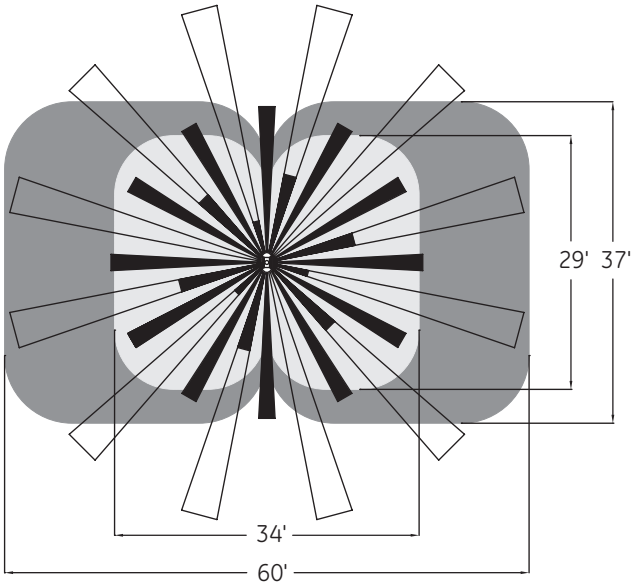

CIR-15-360-D-T

TOP VIEW

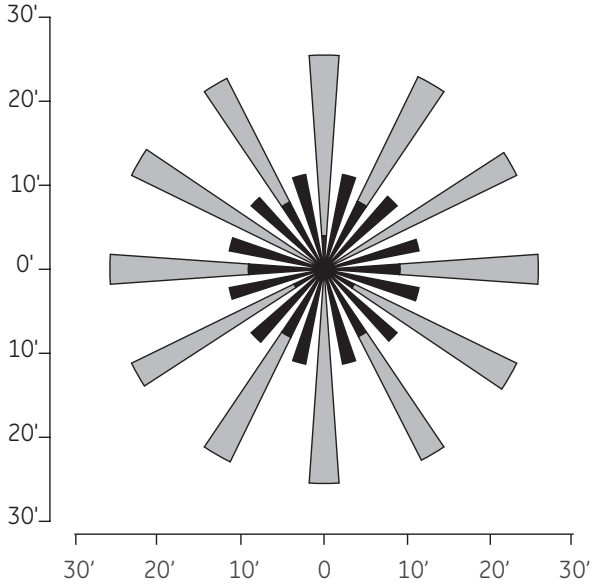

SIDE VIEW

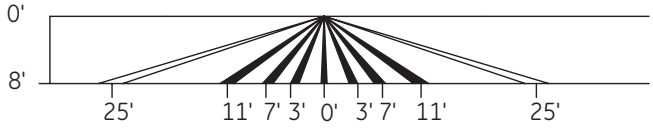

SDT-WIDE (-D)

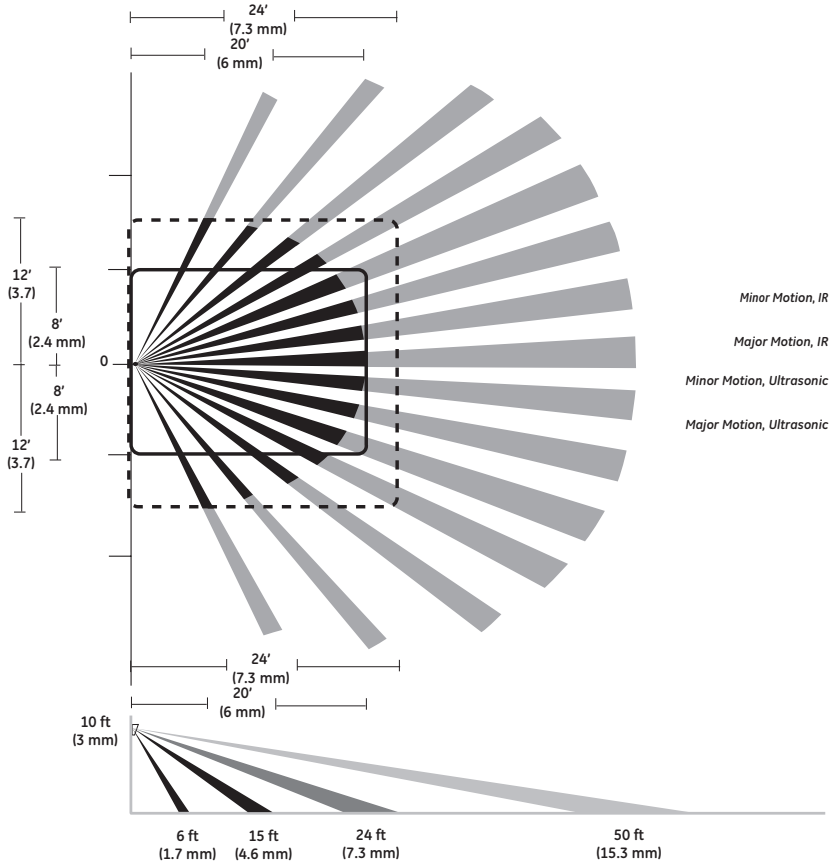

Minor Motion, IR

Major Motion, IR

Minor Motion, Ultrasonic

Major Motion, Ultrasonic

Maximum coverage area may vary somewhat according to room shape and the presence of obstacles.

The NEMA WD 7 Guide and robotic method were utilized to verify coverage patterns.

SIR-LONG (-D)

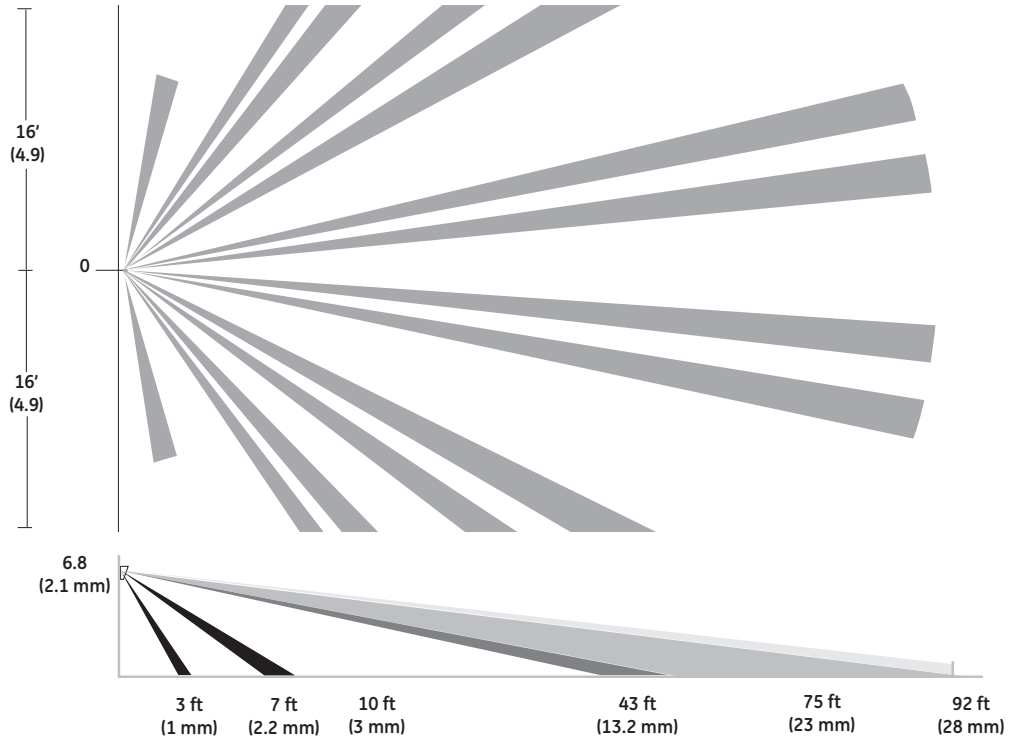

SIR-WIDE (-D)

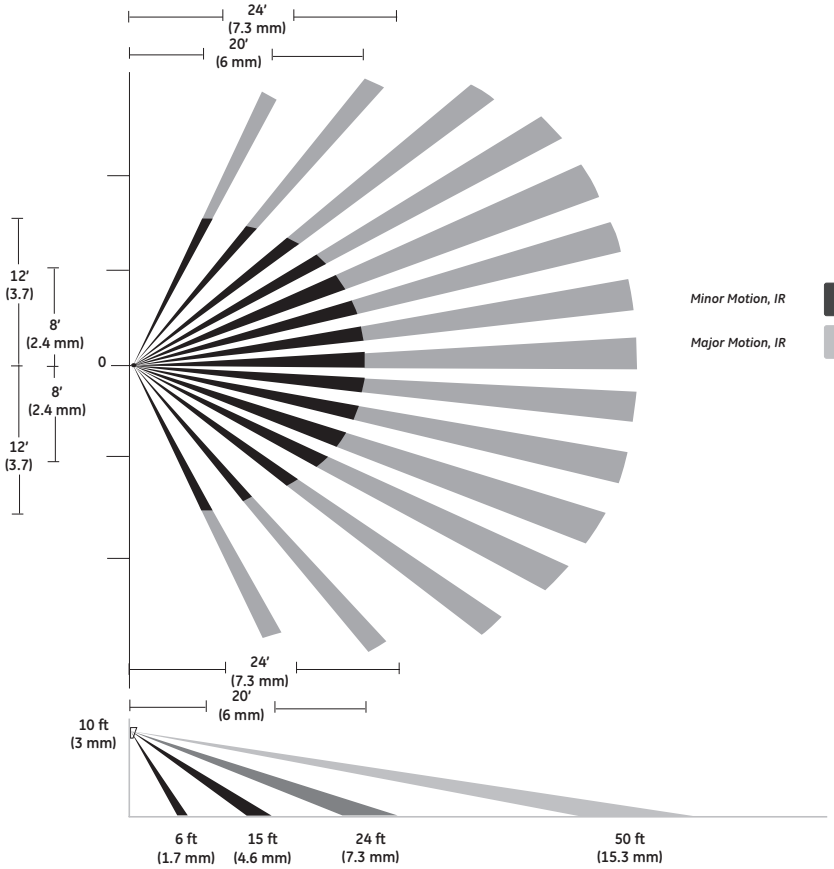

Minor Motion, IR

Major Motion, IR

Maximum coverage area may vary somewhat according to room shape and the presence of obstacles.

The NEMA WD 7 Guide and robotic method were utilized to verify coverage patterns.

WIR/WDT (all)

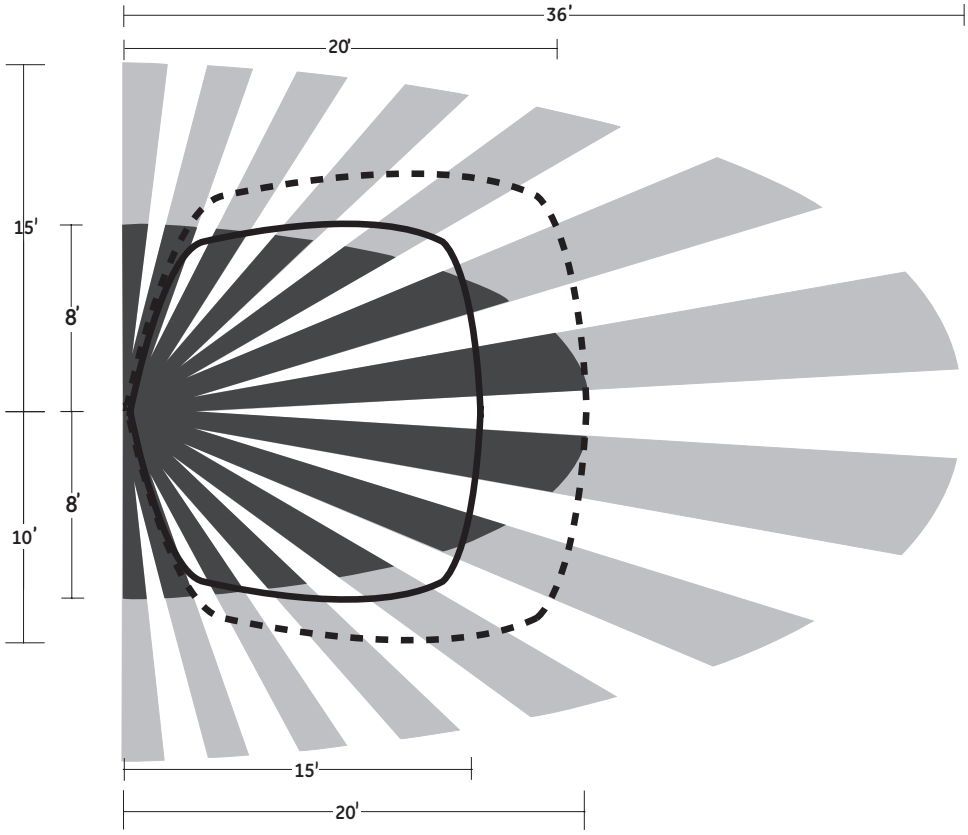

Minor Motion, IR

Major Motion, IR

Minor Motion, Ultrasonic

Major Motion, Ultrasonic

Maximum coverage area may vary somewhat according to room shape and the presence of obstacles.

The NEMA WD 7 Guide and robotic method were utilized to verify coverage patterns.

WIR(all)

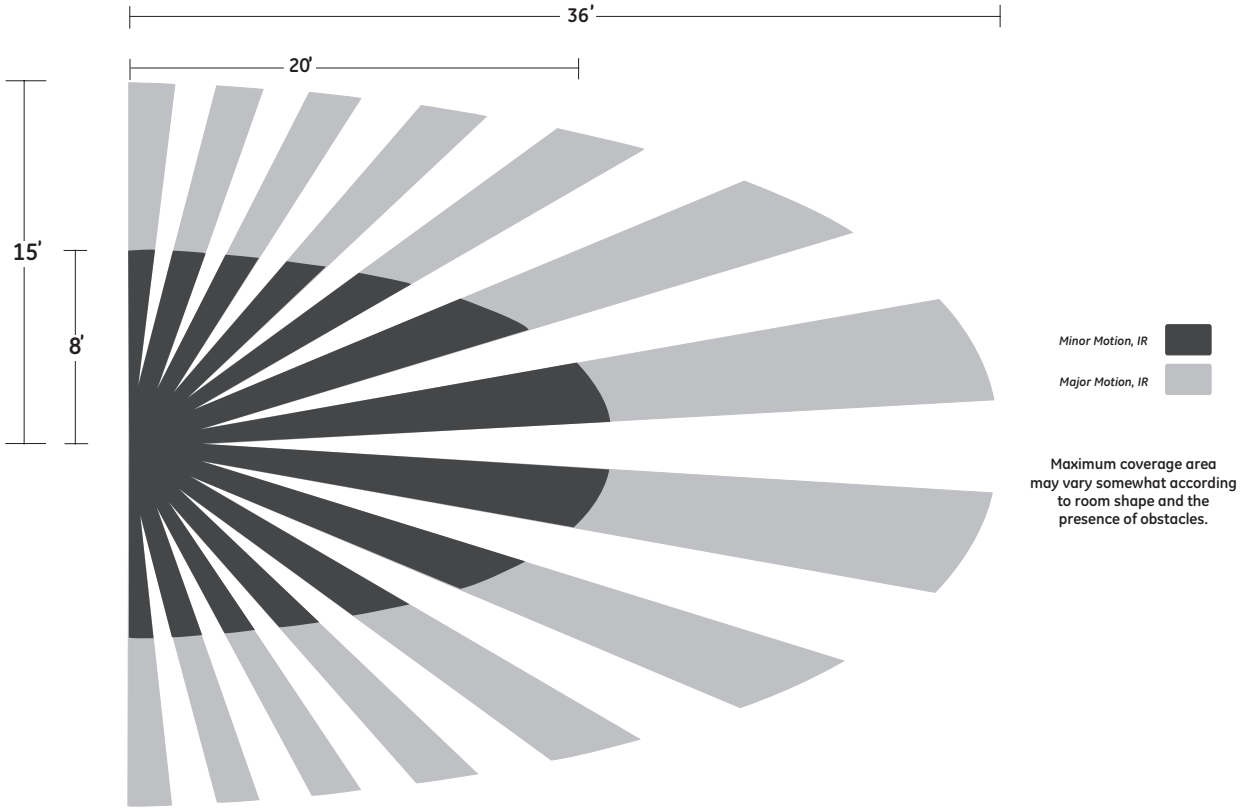

Maximum coverage area may vary somewhat according to room shape and the presence of obstacles.

Notes

Appendix

Lamp Sizing Guide

Lamp Size/Diameter

The diameter of a lamp, at its maximum dimension, is expressed in eighths of an inch. Examples: The diameter of an A19 lamp is 19-eighths of an inch, or 2-3/8", at its widest point. A T8 lamp has a diameter of 8-eighths, or one inch.

Light Center Length (L.C.L.)

The distance between the center of the filament, or arc tube, and a reference plane — usually the bottom of the lamp base. See L.C.L. Reference Plane Location chart below.

L.C.L. Reference Plane Location

Base Type	Location
All Screw Bases (except Mini-Can.)	Bottom of base contact
Mini-Can	Where diameter of ceramic base insulator is .531 inches
3-Contact Medium	Bottom of base contact
Mogul Medium Prefocus	Top of base fins
Mogul Prefocus	Top of base fins
Medium BiPost	Base end of bulb (Glass lamps) Bottom of ceramic base (Quartz lamps)
Mogul BiPost	Shoulder of posts (Glass lamps) Bottom of ceramic base (Quartz lamps)
2-Pin Prefocus	Bottom of ceramic base.
S.C. or D.C. Bayonet Candelabra	Top of base pins
Medium Bayonet	Top of base pins
S.C. or D.C. Prefocus	Plane of locating bosses on prefocus collar
Medium 2-Pin	Bottom of metal base shell

Maximum Overall Length (M.O.L.)

The end-to-end measurement of a lamp, expressed in inches or millimeters.

Important Notice

This catalog is a compilation of accumulated data. Additional information is constantly being uncovered through research and testing, which may modify the data given herein. This is particularly true of newer lamps and ballasts. Accordingly, SPECIFICATIONS ARE SUBJECT TO CHANGE WITHOUT NOTICE. For the latest lamp and ballast design data and information, contact your GE Representative.

The data and suggested applications contained in this catalog, as well as any additional information our representative may be able to furnish, are for general information only and are not intended and should not be taken as representations or warranties as to the suitability of a lamp or ballast for any particular application or use in any particular equipment, nor are our representatives authorized to make any such warranties. Applications and conditions of use are many and varied, and beyond our control. We cannot possibly have the same degree of knowledge that the purchaser has with respect to the design of his equipment and the conditions of its use. Therefore, it is up to the purchaser to make its own determination as to the suitability of a lamp or ballast for his intended application or use and to assume the responsibility for that determination.

General Electric desires to supply the best possible products at all times. For this reason, General Electric reserves the right to make changes in its products, and to introduce new products or discontinue existing ones without notice.

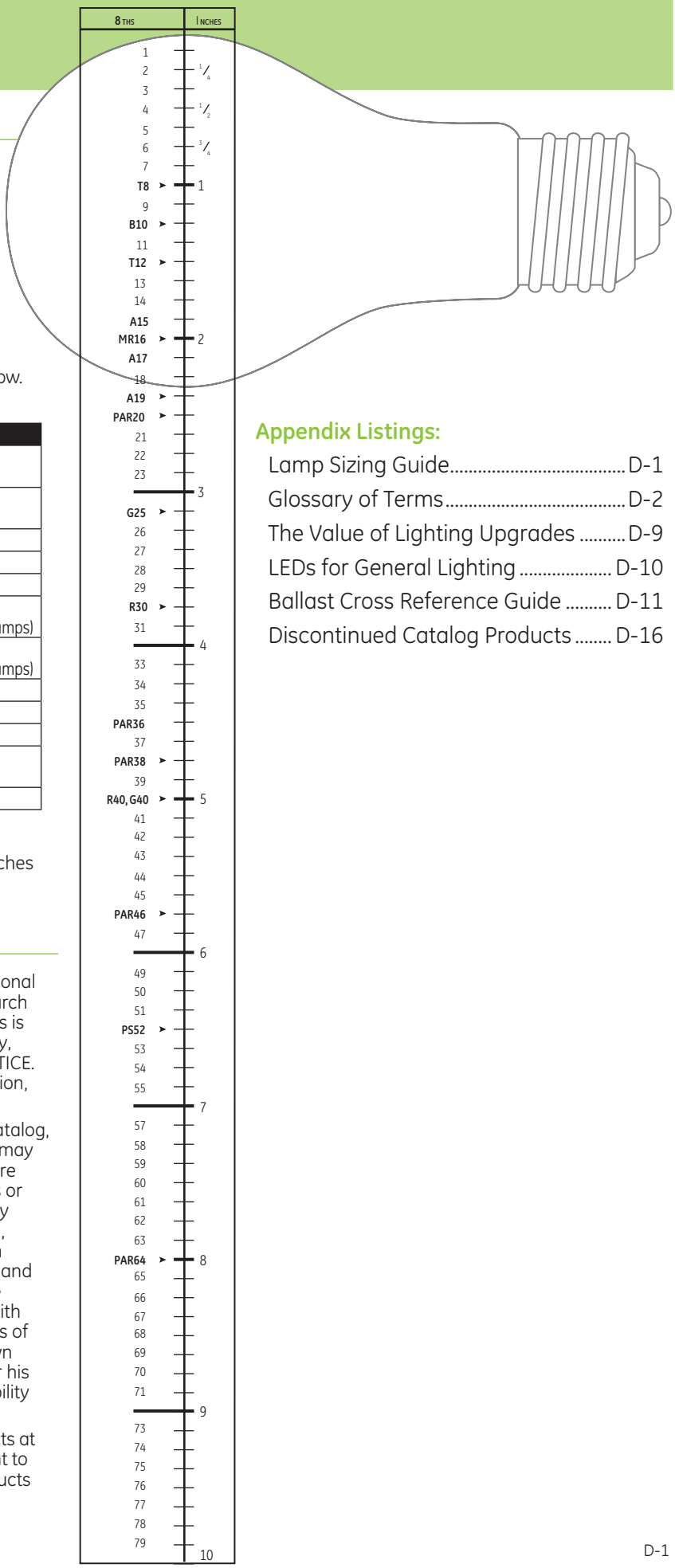

Appendix Listings:

Glossary of Terms

Ambient Temperature
Ambient temperature which refers to the temperature inside the fixture in the air surrounding the fluorescent lamp or LED. Fluorescent lamp light output and LED life are affected by the ambient temperature.

Amperes
("Amps") A measure of electrical current. In incandescent lamps, the current is related to voltage and power as follows: Watts (power) = Volts x Amps (current).

ANSI (American National Standards Institute)
A consensus-based organization which coordinates voluntary standards for the physical, electrical and performance characteristics of lamps, ballasts, luminaires and other lighting and electrical equipment.

ANSI Ballast Type
A reference to the ANSI document describing the lamp which also lists the characteristics of the ballast required to operate the lamp. Technically, therefore, it is incorrect to refer to "Ballast Type" with the ANSI code but this misuse is common. The following naming system is used: H – mercury lamps; M – metal halide lamps; S – high pressure sodium lamps; L – low pressure sodium lamps.

ANSI Codes
These are 3-letter codes assigned by the American National Standards Institute. They provide a system of assuring mechanical and electrical interchangeability among similarly coded lamps from various manufacturers. General Electric uses the assigned ANSI Codes as lamp ordering codes for most projection lamps.

Auto Reset Shutdown Circuit
Circuit senses lamp end life and will automatically shut off power to the lamp(s). When a new lamp is inserted in the socket, the ballast resets, and turns on the lamp automatically. Some shutdown circuits require the power to be cycled before a new lamp will re-light.

Ballast
An auxiliary piece of equipment required to start and to properly control the flow of current to gas discharge light sources such as fluorescent and high intensity discharge (HID) lamps. Typically, magnetic ballasts (also called electromagnetic ballasts) contain copper windings on an iron core while electronic ballasts are smaller and more efficient and contain electronic components.

Ballast Efficacy Factor (BEF)
Defined as ballast factor x 100 divided by input watts. The value is used to evaluate various lighting systems based on light output and power input. The BEF can only be used to compare systems operating the same type and quantity of lamps.

Ballast Factor (BF)
This is the percentage of a lamp's rated lumen output that can be expected when operated on a specific, commercially available ballast. Note that the "rated output" is sometimes measured on a reference ballast unlike ones that actually operate the lamp in the field. For example, a ballast with a ballast factor of 0.93 will result in the lamp's emitting 93% of its rated lumen output. A ballast with a lower BF results in less light output and also generally consumes less power.

Ballast Hum
Sound generated by the vibration of laminations in the iron core of the transformer or inductor present in the ballast.

Ballast Losses
Power or energy dissipated in the ballast as heat and not converted to lamp energy.

Ballast Luminous Efficiency (BLE)
A new (2011) metric measuring the ratio of total fluorescent lamp arc power to the input power supplied to the ballast.

Base Temperature (Maximum)
The maximum operating temperature permitted for the base in Celsius. Fixture manufacturers need to ensure that these conditions are satisfied in their fixture.

Beam Angle
The angular dimension of the cone of light from reflectorized lamps (such as R and PAR types) encompassing the central part of the beam out to the angle where the intensity is 50% of maximum. The beam angle (sometimes called "beam spread") is often part of the ordering code for reflectorized lamps. Example: The 50PAR30/HIR/NFL25 is a 50 watt PAR30 narrow flood lamp with a beam angle of 25 degrees, i.e. 12.5 degrees on either side of the center (see FIELD ANGLE).

Bi-Pin
Any base with two metal pins for electrical contact. This is the typical base for a fluorescent tube of 1 to 4 feet in length. It consists of 2 prong contacts that connect into the fixture. Medium bi-pins are used with type T-8 and T-12 tubular fluorescent lamps, and miniature bi-pins are used for tubular T-5 fluorescent lamps.

Biax®
GE trademark for its biaxial family of high-efficiency and long-life compact fluorescent lamps. DBX (Double Biax), TBX (Triple Biax) and QBX (Quad Biax) refer to the number of U-shaped legs present in the lamp.

Bright from the Start™
A GE brand name for a family of hybrid compact fluroescent lamps (CFL) that eliminate the warm up time to full brightness associated with traditional CFLs.

British Thermal Unit (BTU)
Unit of energy used in HVAC calculations.
1 BTU = 1055 joules; 1kWh = 3412 BTU.

Bulb Size
Bulb shape followed by its size (the maximum diameter of the bulb expressed in eighths of an inch). For Compact Fluorescent products, "S", "D", "T", and "Q" are used to represent Single, Double, Triple and Quad Biax® sizes. The code also includes a reference such as T4 to represent the size of the tube. Rectangular headlamps are designated as "Rect" and the number of millimeters horizontally.

Canadian Energy Standards
Indicates ballast complies with Canadian Energy Standards and meets the requirements of CAN/CSA C654-M91.

Canadian Standards Association (CSA)
Association that generates product performance and safety standards for many Canadian industries.

Candela (cd)
The measure of luminous intensity of a source in a given direction. The term has been retained from the early days of lighting when a standard candle of a fixed size and composition was defined as producing one candela in every direction. A plot of intensity versus direction is called a candela distribution curve and is often provided for reflectorized lamps and for luminaires with a lamp operating in them.

Candlepower
An obsolete term for luminous intensity; current practice is to refer to this simply as candelas (see CANDELA).

Candlepower Distribution Curve
A graphical presentation of the distribution of light intensity of a light source, usually a reflector lamp or luminaire.

Capacitor
Device in ballast that stores electrical energy. Often used for power factor correction and lamp regulation.

Cathode
Metal filaments that emit electrons in a fluorescent lamp. Negatively charged free electrons emitted by the cathode are attracted to the positive electrode (anode), creating an electric current between the electrodes (see ELECTRODE).

Cathode Resistance
Resistance of the cathode in a Fluorescent lamp. It is measured "cold" before the lamp is turned on (Rc) or "hot" after the lamp is turned on (Rh). The ratio of the hot resistance to the cold resistance is also measured (Rh/Rc).

Center Beam Candlepower (CBCP)
Refers to the luminous intensity at the center of the beam of a blown or pressed reflector lamp (such as a PAR lamp). Measured in candelas (see CANDELA).

Ceramic Metal Halide
A type of metal halide lamp that uses a ceramic material for the arc tube instead of glass quartz, resulting in better color rendering (>80 CRI) and improved lumen maintenance. GE ConstantColor® CMH® lamps feature a 3-piece arc tube design that delivers excellent color consistency and lamp reliability.

ChromaFit™
A GE brand name for metal halide lamps designed to operate on HPS ballasts, allowing a user to switch from the yellowish color of HPS to the white color of metal halide without retrofitting ballasts. These products are available in both quartz metal halide and ceramic metal halide (CMH®) versions.

Class P Thermal Protector
A switching device sensitive to current and heat that automatically disconnects ballast if the temperature exceeds UL temperature limitations.

Coefficient of Utilization (CU)
In general lighting calculations, the fraction of initial lamp lumens that reach the work plane. CU is a function of luminaire efficiency, room surface reflectances and room shape.

Coil
Windings of copper or aluminum wire surrounding the steel core in ballast. Also refers to the entire assembly comprising the inductor or transformer.

Color Quality Scale (CQS)
A new color metric proposed by NIST (US National Institute of Standards) based on fifteen color chips instead of the eight used in CRI.

Color Rendering Index (CRI)
A measure of the ability of a light source to render object colors faithfully in comparison with a designated standard light source. Incandescent objects and daylight are both considered "standard" sources. Note that "standard" is defined for convenience in reproducibility rather than being based on user preference.

Color Temperature (Correlated Color Temperature – CCT)
A number indicating the degree of "yellowness" or "blueness" of a white light source. Measured in Kelvins, CCT represents the temperature an incandescent object (like a filament) must reach to mimic the color of the lamp. Yellowish-white ("warm") sources, like incandescent lamps, have lower color temperatures in the 2700K–3000K range; white and bluish-white ("cool") sources, such as cool white (4100K) and natural daylight (6000K), have higher color temperatures. The higher the color temperature the whiter, or bluer, the light will be.

Compact Fluorescent Lamp (CFL)
The general term applied to fluorescent lamps that are single-ended and that have smaller diameter tubes that are bent to form a compact shape. Some CFLs have integral ballasts and medium or candelabra screw bases for easy replacement of incandescent lamps.

ConstantColor®
A GE registered name for lamp families that show very little color shift over life, such as GE's Precise™ MR16 lamps and GE's ceramic metal halide (CMH®) lamps.

Cool White
A term loosely used to denote a color temperature of around 4100K. The Cool White (CW) designation is used specifically for T12 and other fluorescent lamps using halophosphors and having a CRI of 62.

Core
Component of electromagnetic ballast that is surrounded by the coil. Core is comprised of steel laminations or solid ferrite material.

Core & Coil Ballast
A ballast that uses a "Core & Coil" assembly to operate fluorescent or HID lamps. Refers to copper or aluminum windings on a steel core.

Cost of Light
Usually refers to the cost of operating and maintaining a lighting system on an ongoing basis. The 88-8-4 rule states that (typically) 88% is the cost of electricity, 8% is labor and only 4% is the cost of lamps.

covRguard®
A GE lamp encased by a plastic sleeve or coating to help contain glass fragments if the lamp breaks.

Crest Factor (Lamp Current Crest Factor)
Ratio of peak to RMS for any AC waveform. Crest factor can refer to voltage crest factor or current crest factor.

Current Type (AC/DC)
Whether the operational voltage is based on Alternating Current or Direct Current.

Daylight Harvesting
Lighting design for building interiors that makes use of daylight as a way of reducing energy consumption.

Dimmer, Dimming Control
A device used to lower the light output of a source, usually by reducing the wattage it is being operated at. Dimming controls are increasing in popularity as energy conserving devices.

Discharge Lamp
A lamp where light is emitted from an electrical discharge between two electrodes as opposed to a filament lamp. Examples are: Fluorescent lamps and HID (High Intensity Discharge) lamps like Metal Halide, Mercury and High Pressure Sodium. All discharge lamps require some kind of current-limiting device, e.g. a ballast, to operate them.

Ecolux®
A brand for GE lamps that have reduced mercury content and pass the TCLP test.

Edison
GE's trademark for a wide range of halogen lamps for the consumer market.

Efficacy
A measurement of how effective the light source is in converting electrical energy to lumens of visible light. Expressed in lumens-per-watt (LPW), this measure gives more weight to the yellow region of the spectrum and less weight to the blue and red regions where the eye is not as sensitive. The efficiency of a light source is simply the fraction of electrical energy converted to light, i.e. watts of visible light produced for each watt of electrical power with no concern about the wavelength where the energy is being radiated. For example, a 100-watt incandescent lamp converts 7% of the electrical energy into light; discharge lamps convert 25% to 40% into light.

Efficiency
The efficiency of a light source is simply the fraction of electrical energy converted to light, i.e. watts of visible light produced for each watt of electrical power with no concern about the wavelength where the energy is being radiated. For example, a 100-watt incandescent lamp converts 7% of the electrical energy into light; discharge lamps convert 25% to 40% into light. The efficiency of a luminaire or fixture is the percentage of the lamp lumens that actually comes out of the fixture (see LUMINAIRE EFFICIENCY).

Efficiency of Ballast
See Ballast Luminous Efficiency.

e-HID ballast (see ELECTRONIC HID BALLAST).

Electrical Discharge
A condition under which a gas becomes electrically conducting and becomes capable of transmitting current, usually accompanied by the emission of visible and other radiation. An electric spark in air is an example of an electrical discharge, as is a welder's arc and a lightning bolt.

Electrical Testing Laboratory (ETL)
Independent testing laboratory that performs ballast tests and certifies accuracy of performance data.

Electrode
Any metal terminal emitting or collecting charged particles, typically inside the chamber of a gas discharge lamp. In a fluorescent lamp, the electrodes are typically metal filaments coated with special powders called emission mix. Negatively charged free electrons emitted by one electrode are attracted to the positive electrode (anode), creating an electric current and arc between electrodes.

Electrodeless Lamps
Light sources where the discharge occurs in a chamber with no electrodes (no metal). The energy for the discharge is supplied by radio frequency excitation, e.g. microwaves (see INDUCTION LIGHTING and GENURA®).

Electromagnetic Ballast (see MAGNETIC BALLAST).

Electromagnetic Spectrum
A continuum of electric and magnetic radiation that can be characterized by wavelength or frequency. Visible light encompasses a small part of the electromagnetic spectrum in the region from about 380 nanometers (violet) to 770 nanometers (red) by wavelength.

Electromagnetic Interference (EMI)
High-frequency electronic ballasts and other electronic devices can produce a small amount of radio waves that can interfere with radio and TV. Federally-mandated requirements must be met for EMI levels before an electronic device is considered FCC compliant (FCC is the Federal Communications Commission).

Electronic Ballast
A short name for a fluorescent high-frequency electronic ballast. Electronic ballasts use solid-state electronic components and typically operate fluorescent lamps at frequencies greater than 25 kHz. The benefits are: increased lamp efficacy, reduced ballast losses and lighter, smaller ballasts compared to electromagnetic ballasts. Electronic ballasts may also be used with HID (high intensity discharge) lamps (see MAGNETIC BALLASTS).

Electronic HID Ballast
An electronic ballast capable of operating an HID lamp. GE's UltraMax® (electronic HID ballast) operates PulseArc® (metal halide) and CMH® (ceramic metal halide) lamps between 250W and 400W and provides higher efficiency and significantly improved lumen maintenance over magnetic ballasts.

Elliptical Reflector (ER) Lamp
An incandescent lamp with a built-in elliptically shaped reflecting surface. This shape produces a focal point directly in front of the lamp which reduces light absorption in some types of luminaires. It is particularly effective at increasing the efficiency of baffled downlights.

Energy Policy Act (EPACT)
Comprehensive energy legislation passed by the U. S. Congress. The lighting portion includes lamp labeling and minimum energy efficacy (lumens/watt) requirements for many commonly used incandescent and fluorescent lamp types. Federal Canadian legislation sets similar minimum energy efficacy requirements for incandescent reflector lamps and common linear fluorescent lamps. Provisions for Tax Deductions expiring at the end of 2013.

ENERGY STAR®
As of this publication (2012) U.S. Department of Energy (DOE) designation for products meeting certain energy efficiency and performance standards. Among manufacturers of LEDs, GE has the largest number of ENERGY STAR® products as listed on the Federal Government's website.

EOL (End-of-Life Protection)
A circuit that senses that a lamp has reached

end of life (compact fluorescent lamps and small-diameter linear fluorescent lamps) and turns off power to the lamp. Continuing to power the lamp beyond end of life can result in overheating of the lamp ends.

Federal Communications Commission (FCC)
The U. S. federal agency that regulates emissions in the radio frequency portion of the electromagnetic spectrum. Part 18 of the FCC rules specifies electromagnetic interference (EMI) from lighting devices at frequencies greater than 450 kilohertz (kHz). A consumer-rated Class B ballast is designed for use in the home near TV and radio receivers. It produces less electrical noise that could interfere with consumer products. A Class A-rated ballast is designed for use in commercial and industrial applications that are not in the vicinity of TV and radio receivers.

Field Angle
The angular dimension of the cone of light from reflectorized lamps (such as R and PAR types) encompassing the central part of the beam out to the angle where the intensity is 10% of maximum (see BEAM ANGLE).

Flicker
The periodic variation in light level caused by AC operation that can lead to strobe effects.

Fluorescent HO
Fluorescent HO and VHO lamps require special ballasts that generate higher currents than standard ballasts and operate the lamps at higher wattage than standard lamps. These lamps are generally less efficient than the standard product. Metal Halide HO and XHO lamps operate on the same ballasts as standard lamps and at the same wattage but are more efficient and produce higher light output than standard lamps.

Fluorescent Lamp
A high efficiency lamp utilizing an electric discharge through low pressure mercury vapor to produce ultra-violet (UV) energy. The UV excites phosphor materials applied as a thin layer on the inside of a glass tube which makes up the structure of the lamp. The phosphors transform the UV to visible light.

Footcandle (fc)
A unit of illuminance or light falling onto a surface. It stands for the light level on a surface one foot from a standard candle. One footcandle is equal to one lumen per square foot (see LUX).

Forward Current
The current in milliamperes or amperes that the driver is pushing through the LED. For a given LED package, the higher the forward current, the higher the light output, the lower the efficacy and the poorer the lumen maintenance and expected life.

Four-Pin Compact Fluorescent Lamps
A "plug-in" compact fluorescent lamp with 4 pins in the base to make electrical contact with the ballast. Four-pin lamps can be dimmed on appropriate dimming ballasts while two-pin lamps cannot.

Frequency
Rate of alternation in an AC current. Expressed in cycles per second or Hertz (Hz).

Full Spectrum Lighting
A marketing term, typically associated with light sources that are similar to some forms of natural daylight (5000K and above, 90+ CRI), but sometimes more broadly used for lamps that have a smooth and continuous color spectrum.

Genura®
GE's electrodeless compact fluorescent lamp, Genura®, uses induction to power the discharge. The chamber generates UV (just like a discharge in a regular fluorescent lamp) that is converted by phosphors to visible light. Because Genura® uses no electrodes, the life of this unique reflector lamp is longer than typical compact fluorescent products (see INDUCTION LIGHTING).

Glare
Visual discomfort caused by excessive brightness is called discomfort glare. If task performance is affected it is called disability glare. Glare can be direct glare or indirect (reflected) glare.

Group Relamping
The practice of replacing all the lamps at an installation at one time with new lamps when the lamps have operated for (typically) 65% to 70% of rated life. The two benefits of group relamping are: (1) reduced maintenance costs because of the expense and inconvenience of replacing failing lamps one at a time, and (2) improved appearance and performance since older lamps are often degrading in brightness and color as they age.

Halogen Lamp
A halogen lamp is an incandescent lamp with a filament that is surrounded by halogen gases, such as iodine or bromine. Halogen gases allow the filaments to be operated at higher temperatures and higher efficacies. The halogen participates in a tungsten transport cycle, returning tungsten to the filament and prolonging lamp life. All halogen lamps have a tungsten filament and, often, a quartz envelope.

HIR™
GE designation for high-efficiency tungsten halogen lamps. HIR lamps utilize shaped filament tubes coated with numerous layers of materials that transmit light but reflect the heat (infrared) back onto the filament. This reduces the power needed to keep the filament hot.

Harmonic
An integral multiple of the fundamental frequency (60 Hz) that becomes a component of the current.

Harmonic Distortion (see TOTAL HARMONIC DISTORTION or THD).

Hertz (Hz)
Unit used to measure frequency of alteration of current or voltage, in cycles per second.

Highbay Lighting
Lighting designed for (typically) industrial locations with a ceiling height of 25 feet and above.

High Intensity Discharge (HID) Lamp
A general term for mercury, metal halide (GE ConstantColor® CMH®, Multi-Vapor®, MXR or Arcstream®) and high-pressure sodium (GE Lucalox®) lamps. HID lamps contain compact arc tubes which enclose various gases and metal salts operating at relatively high pressures and temperatures.

High Output/Very High Output (HO, VHO) Lamps
Designation for lamps generating more light than standard lamps.

High Power Factor
A ballast whose power factor is corrected to 90% or greater.

High-Pressure Sodium (HPS) Lamp
HPS lamps are high intensity discharge light sources that produce light by an electrical discharge through sodium vapor operating at relatively high pressures and temperatures. GE markets these lamps under the trade name of Lucalox®.

Hot Restart Time
If there is a momentary power interruption and the HID lamp goes out, there will be a delay of 10 to 15 minutes before the lamp has cooled down sufficiently to start again. This is called the Hot Restart time. PulseArc® lamps have a significantly shorter Hot Restart time (typically 3–5 minutes) than standard metal halide lamps. Lucalox® Standby lamps will start up immediately while standard Lucalox® lamps require a few minutes.

Ignitor
An electronic device providing a high voltage pulse to initiate an electrical discharge. Typically, the ignitor is paired with or is a part of the ballast.

Illuminance
The "density" of light (lumens/area) incident on a surface; i.e. the light level on a surface. Illuminance is measured in footcandles or lux.

Incandescent Lamp
A light source that generates light utilizing a thin filament wire (usually of tungsten) heated to white heat by an electric current passing through it.

Indirect Lighting
The method of lighting a space by directing the light from luminaires upwards towards the ceiling. The light scattered off the ceiling produces a soft, diffuse illumination for the entire area.

Induction Lighting
Gases can be excited directly by radio-frequency or microwaves from a coil that creates induced electromagnetic fields. This is called induction lighting and it differs from a conventional discharge, which uses electrodes to carry current into the arc. Induction lamps have no electrodes inside the chamber and generally, therefore, have longer life than standard lamps, but slightly reduced efficiency.

Infrared Radiation
Electromagnetic energy radiated in the wavelength range of about 770 to 1,000,000 nanometers. Energy in this range cannot be seen by the human eye, but can be sensed as heat by the skin.

Input Voltage
Power supply voltage required for proper operation of fluorescent or HID ballast.

Input Watts
The total power input to the ballast that includes lamp watts and ballast losses. The total power input to the fixture is the input watts to the ballast or ballasts and is the value to be used when calculating cost of energy and air conditioning loads. More than 90% of the input watts is wattage or power delivered to the lamp load with typical ballast.

Instant Start
A type of ballast designed to start fluorescent lamps as soon as the power is applied. Most T8 fluorescent lamps are being operated on electronic instant-start ballasts. Slimline fluorescent lamps operate only on instant-start circuits.

Instant-Start Lamp
A fluorescent lamp, usually with a single pin at each end, approved to operate on instant-start ballasts. The lamp is ignited by a high voltage without any filament heating.

Integral
A popular term for a compact fluorescent lamp that includes a built-in ballast (see CFL).

Joule
The fundamental unit of energy equal to 1 watt-second.

Kelvins (see COLOR TEMPERATURE).

Kilowatt (kW)
A measure of electrical power equal to 1000 watts.

Kilowatt Hour (kWh)
The standard measure of electrical energy and the typical billing unit used by electrical utilities for electricity use. A 100-watt lamp operated for 10 hours consumes 1000 watt-hours (100 x 10) or one kilowatt-hour. If the utility charges $.10/kWh, then the electricity cost for the 10 hours of operation would be 10 cents (1 x $.10).

L70, L85, etc.
L70 (or L85, etc.): The elapsed operating time over which a population of LED light sources will maintain 70% (or 85%) of its initial light output. This 70% number represents the expected median light output (which is close to the average light output) of the tested LED light source population. The value is often stated using the form L70(10K)= 50,000 Hours; this means that the LED light source's median light output reaches 70% of the initial light output at 50,000 Hours based on 10,000 hours of test data using TM-21 projection methods. When the L70 value is stated as "Reported" it means that tests have gone to at least 1/6th of the reported time as required by IESNA's TM-21 methodology. On the other hand, manufacturers will sometimes state a "Calculated" value of L70 which means they are using mathematical curve fitting and projection methods of TM-21 to project beyond 6 times the available test hours.

Laminations
Layers of steel, making up the "core" that is surrounded by the coils in a core & coil ballast.

Lamp
The term used to refer to the complete light source package, including the inner parts as well as the outer bulb or tube. "Lamp," of course, is also commonly used to refer to a type of small light fixture such as a table lamp.

Lamp Current Crest Factor
Ratio of peak lamp current to RMS or average lamp operating current.

Lamp Types

Filament lamps:	Incandescent, Halogen, Halogen-IR®.
Discharge Lamps:	Fluorescent, HID (High Intensity Discharge)
HID Lamps:	Mercury, HPS (High-Pressure Sodium), MH (Metal Halide) and CMH® (Ceramic Metal Halide)
LED	Solid State Lighting Devices

Lamp Watts
Power dissipated in the lamp—some of which is converted to light, some to heat and some to ultraviolet.

LED
Light Emitting Diode used as the primary light source in a wide array of LED lighting products. LEDs operate on low voltage DC. Also referred ot as SSL (Solid State Lighting).

Life (see RATED LAMP LIFE).

Light
Radiant energy that can be sensed or seen by the human eye. Visible light is measured in lumens.

Light Center Length (L.C.L.)
The distance between the center of the filament, or arc tube, and a reference plane—usually the bottom of the lamp base.

Light Emitting Diode (LED)
A solid that directly converts electrical impulses into light. Some LEDs today incorporate fluorescent materials to change the color characteristics of the emitted light.

Light Loss Factor (LLF)
The product of all factors that contribute to lowering the illumination level including reflector degradation, dirt, lamp depreciation over time, voltage fluctuations, temperature effects, burn-out factor, etc.

LM79
Test procedures specified by the Illuminating Engineering Society for measurements on LED products (complete assembled systems) of lumens, watts and color in actual operating environments.

LM80
Test procedures specified by the Illuminating Engineering Society for measuring lumen depreciation of LED sources, arrays and modules—not luminaires. 6000 hour testing is minimum, but this standard does not provide methods for estimating life.

Lucalox®
The GE brand name for high-pressure sodium lamps.

Lumen
A measure of luminous flux or quantity of light emitted by a source. For example, a dinner candle provides about 12 lumens. A 60-watt Soft White incandescent lamp provides 840 lumens.

Lumen Depreciation, Lumen Maintenance
A measure of how well a lamp maintains its light output over time. It may be expressed numerically or as a graph of light output vs. time. The "mean lumens" of a lamp is the lumens at 40% of rated life (50% for HPS lamp).

Lumens Per Watt (LPW)
A ratio expressing the luminous efficacy of a light source.

Typical lamp efficacies:

Edison's first lamp	1.4 LPW
Incandescent lamps	10-20
Halogen lamps	15-30
Fluorescent lamps	35-105
LED Products	45-100
Mercury lamps	50-60
Metal halide lamps	60-120
High-pressure sodium lamps	60-140

Note: The values above for discharge lamps do not include the effect of the ballasts, which must be used with those lamps. Taking ballast losses into account reduces "system" or lamp ballast efficacies typically by 10-20% depending upon the type of ballast used.

Luminaire
A complete lighting unit consisting of a lamp (or lamps), ballast (or ballasts) as required together with the parts designed to distribute the light, position and protect the lamps and connect them to the power supply. A luminaire is often referred to as a fixture.

Luminaire Efficiency
The ratio of total lumens emitted by a luminaire to those emitted by the lamp or lamps used in that luminaire.

Luminance
A photometric measure of "brightness" of a surface as seen by the observer, measured in candelas per square meter.

Luminous Efficacy
The light output (lumens) of a light source divided by the total power input (watts) to that source. It is expressed in lumens per watt (see LUMENS PER WATT).

Lux (lx)
A unit of illuminance or light falling onto a surface. Lux stands for the light level on a surface one meter from a standard candle. One lux is equal to one lumen per square meter. Ten lux approximately equals one footcandle (see FOOTCANDLE).

Magnetic Ballast
A ballast used with discharge lamps that consists primarily of transformer-like copper or aluminum windings on a steel or iron core. Also called "Core & Coil" (see ELECTRONIC BALLASTS).

Maximum Overall Length (M.O.L.)
The end-to-end measurement of a lamp, expressed in inches or millimeters.

Mean Lumens
The average light output of a lamp over its rated life. Based on the shape of the lumen depreciation curve, for fluorescent and metal halide lamps, mean lumens are measured at 40% of rated lamp life. For mercury, high-pressure sodium and incandescent lamps, mean lumen ratings refer to lumens at 50% of rated lamp life (see LUMEN MAINTENANCE).

Medium Base
Usually refers to the screw base typically used in household incandescent lamps. There is also the medium bi-pin base commonly used in T12 and T8 fluorescent lamps.

Mercury Lamp
A high-intensity discharge light source operating at a relatively high pressure (about 1 atmosphere) and temperature in which most of the light is produced by radiation from excited mercury vapor. Phosphor coatings on some lamp types add additional light and improve color rendering.

Metal Cases
Case design used in both magnetic and electronic ballasts. These ballasts are grounded once they are mounted to the fixture. They meet all safety codes, some of which do not allow plastic in open plenum areas.

Metal Halide Lamp
A high-intensity discharge light source in which the light is produced by the radiation from mercury, plus halides of metals such as sodium, scandium, indium and dysprosium. Some lamp types may also utilize phosphor coatings. GE trade names include: Multi-Vapor®, ConstantColor® CMH®, PulseArc®, Staybright®, Watt-Miser®, ChromaFit™ and Arcstream®.

Mogul Base
A screw base used on larger lamps, e.g. many HID lamps.

Mortality Curve
Lamps have a rated or expected life but individual failures occur earlier and some lamps will last

longer. The mortality curve depicts the expected percent surviving in a group of lamps at various points between zero hours and rated life or beyond. The curve starts with 100% at zero hours and goes to 50% surviving at the rated life (e.g. 3000 hours or 20,000 hours, etc.) However, the shape of the curve between these two end points can vary depending on the lamp type. LEDs have a very different mortality curve from traditional products. See L70, L85 etc. Well-manufactured LEDs are expected to have very little actual "failures" in the traditional sense.

Mounting Height
Distance from the bottom of the fixture to either the floor or work plane, depending on usage.

Multi-Vapor®
A GE brand name for metal halide lamps.

Nanometer
A unit of wavelength equal to one billionth of a meter.

National Energy Standards for Fluorescent Ballasts
A federal law enacted in 1988 that sets energy standards for ballasts consistent throughout the United States.

National Electric Code (NEC)
A nationally accepted electrical installation code to reduce the risk of fire, developed by the National Fire Protection Association.

National Stock Number
The standardized part number used by the U.S. Government for procurement.

NOM
Laboratory that sets safety standards for building materials, electrical appliances and other products for Mexico.

Non-PCB Capacitor
Capacitor used in ballasts to help provide power factor correction. Contains no polychlorinated biphenyls and meets EPA requirements.

Normal Power Factor
Ballasts with power factor less than .90 that do not incorporate any means of Power Factor Correction.

Open Circuit Voltage (OCV)
Open Circuit Voltage measured across the socket the lamp screws into, with the ballast powered on. It is dangerous to stick a voltmeter into such a socket without precise knowledge of the ballast because high voltages and voltage pulses could be present.

Operating Voltage
For electrical discharge lamps, this is the voltage measured across the discharge when the lamp is operating. It is governed by the contents of the chamber and is somewhat independent of the ballast and other external factors.

PAR Lamp
PAR is an acronym for parabolic aluminized reflector. A PAR lamp, which may utilize either an incandescent filament, a halogen filament tube or an HID arc tube, is a precision pressed-glass reflector lamp. PAR lamps rely on both the internal reflector and prisms in the lens for the control of the light beam. Today it is common to refer to LED replacement products for PAR lamps as "LED PAR Lamps" even though there may be no parabolic reflector in the package.

Parallel Lamp Operation/Parallel Wiring
Refers to ballasts that employ multiple output current paths from a single ballast to allow lamps to operate independent of one another, allowing other lamps operated by the ballast to remain lit should companion lamp(s) fail (see SERIES LAMP OPERATION).

PCB (Polychlorinated Biphenyls)
Chemical pollutant formerly used in ballast capacitors that were part of ballasts. It is now illegal to use PCBs and most such ballasts have been replaced over time.

Phosphor
An inorganic chemical compound processed into a powder and deposited on the inner glass surface of fluorescent tubes and some mercury and metal-halide lamp bulbs. Phosphors are designed to absorb short-wavelength ultraviolet radiation and to transform and emit it as visible light.

Photometry
The measurement of light and related quantities.

Photopic (see SCOTOPIC/PHOTOPIC).

Potting
Material used to completely surround and cover components of some magnetic and electronic ballasts. Potting compound fulfills functions of protecting components, dampening sound, and dissipating heat.

Power Factor (PF)
A measure of the phase difference between voltage and current drawn by an electrical device, such as a ballast or motor. Power factors can range from 0 to 1.0 with 1.0 being ideal. Power factor is sometimes expressed as a percent. Incandescent lamps have power factors close to 1.0 because they are simple "resistive" loads. The power factor of a fluorescent and HID lamp system is determined by the ballast used. "High" power factor usually means a rating of 0.9 or greater. Power companies may penalize users for using low-power-factor devices.

Power Factor Corrected
Ballasts that incorporate a means of Power Factor Correction yielding power factor of 90% or greater.

Precise™
The GE trade name for the compact MR-16 and MR-11 low-voltage halogen dichroic cool beam reflectorized spot and flood lamps.

Preheat Circuit
A type of fluorescent lamp-ballast circuit used with the first commercial fluorescent lamp products. A push button or automatic switch is used to preheat the lamp cathodes. Starting the lamp can then be accomplished using simple "choke" or reactor ballasts. A preheat fluorescent lamp is one in which the filament must be heated by use of a starter before the arc is created. These lamps are typically operated with electromagnetic ballasts.

Product Code
It is important to use this five-digit code when ordering to ensure that you receive the exact product you require.

Programmed Rapid Start
Lamp starting method which preheats the lamp filaments while not allowing the lamp to ignite and then applies the open circuit voltage (OCV) to start the lamp. The user may experience a half- to one-second delay after turning on the lamps while the preheating takes place. This type of starting circuit keeps lamp end blackening to a minimum and improves lamp life performance, especially in applications where the lamps are frequently switched on and off.

PulseArc®
GE metal halide lamp that provides improved lumen maintenance for longer useful life and extended relamp cycles. These products are designed to operate on ballasts that have ignitors to help with lamp starting.

Pulse Start
A lamp that requires an HID ballast with a high-voltage ignitor to start the lamp.

Quartz
A name for fused silica or melted sand from which many high-temperature containers are fashioned in the lighting industry. Quartz looks like glass but can withstand the high temperatures needed to contain high-intensity arc discharges.

Quartz-Halogen Lamp (see HALOGEN LAMP).

Quartzline®
A GE registered trademark term for some types of halogen lamps.

Radiation
A general term for the release of energy in a "wave" or "ray" form. All light is radiant energy or radiation, as is heat, UV, microwaves, radio waves, etc.

Rapid Start
Lamp starting method in which lamp filaments are heated while open circuit voltage (OCV) is applied to facilitate lamp ignition. A Rapid Start fluorescent lamp has two pins at each end connected to the filament. Some rapid start lamps may be instant-started without filament heat, for example, the F32T8 lamp.

Rapid Start Circuit
A fluorescent lamp-ballast circuit that utilizes continuous cathode heating, while the system is energized, to start and maintain lamp light output at efficient levels. Rapid start ballasts may be either electromagnetic, electronic or of hybrid designs. Full-range fluorescent lamp dimming is only possible with rapid start systems.

Rare Earths
A family of natural elements in the Periodic table. Rare earth compounds form an important part of the modern phosphors used in fluorescent lamps and LEDs.

Rated Lamp Life
For most lamp types, rated lamp life is the length of time of a statistically large sample between first use and the point when 50% of the lamps have died. It is possible to define "useful life" of a lamp based on practical considerations involving lumen depreciation, color shift and also on the need to reduce lamp replacement costs (see GROUP RELAMPING).

Reflector Lamp (R)
A light source with a built-in reflecting surface. Sometimes, the term is used to refer specifically to blown bulbs like the "R" and "ER" lamps; at other times, it includes all reflectorized lamps like PAR and MR.

Room Cavity Ratio (RCR)
A shape factor (for a room, etc.) used in lighting calculations.
RCR = 5H (L+W) / L x W, or, alternately,
RCR = (2.5) Total Wall Area / Floor Area.

Where H = height, L = length and W = width of the room. A cubical room will have an RCR of 10; the flatter the room the lower the RCR.

RP
A series of "Recommended Practices" issued by the Illuminating Engineering Society for various lighting applications, e.g. RP 1 for Office Lighting, RP 8 for Roadway Lighting, RP 29 for Museum Lighting, etc.

Scotopic/Photopic (S/P) Ratio
This measurement accounts for the fact that of the two light sensors in the retina, rods are more sensitive to blue light (scotopic vision) and cones to yellow light (photopic vision). The Scotopic/Photopic (S/P) Ratio is an attempt to capture the relative strengths of these two responses. S/P is calculated as the ratio of scotopic lumens to photopic lumens for the light source on an ANSI reference ballast. Cooler sources (higher-color-temperature lamps) tend to have higher values of the S/P Ratio compared to warm sources.

Self-Ballasted Lamps
A discharge lamp with an integral ballasting device allowing the lamp to be directly connected to a socket providing line voltage (see CFL).

Series Lamp Operation
Refers to ballasts that employ a single current path passing through all lamps operated by the ballast. If one lamp should fail, companion lamps operated by the same ballasts will also extinguish or dim.

Spacing to Mounting Height Ratio
Ratio of fixture spacing (distance apart) to mounting height above the work plane; sometimes called spacing criterion. It is OK to have fixture spaced closer than the spacing criterion suggested by the manufacturer but not farther, or you will get dark spots in-between fixtures.

Specification Series (SP) Colors
Energy-efficient, all-purpose tri-phosphor fluorescent lamp colors that provide good color rendering. The CRI for SP colors is 70 or above and varies by specific lamp type. See Lamp Color Chart on inside back cover.

Specification Series Deluxe (SPX) Colors
Energy-efficient tri-phosphor fluorescent lamp colors that provide better color rendering than Specification Series (SP) colors. The CRI for SPX colors is 80 or higher and varies by specific lamp type. All GE CFL products use SPX phosphors. See Lamp Color Chart on inside back cover.

Specification Series Deluxe eXtreme (SPXX) Colors
A color designation for GE ceramic metal halide lamps with superior color rendering ~ 90.

Specular Reflection
Reflection from a smooth, shiny surface, as opposed to diffuse reflection.

Spectral Power Distribution (SPD)
A graph of the radiant power emitted by a light source as a function of wavelength. SPDs provide a visual profile or "fingerprint" of the color characteristics of the source throughout the visible part of the spectrum. Also called "spectral curve" or "spectrum."

Spiral® Lamp
GE trademark for its helical family of high-efficiency, long-life compact fluorescent lamps.

Starcoat®
GE's special barrier coating applied on the inside of all GE T8 fluorescent lamps, as well as some other lamp types, to enhance lamp life and deliver superior lumen maintenance.

Starter
An electronic module or device used to assist in starting a discharge lamp, typically by providing a high-voltage surge (see IGNITOR).

Starting Temperature (Minimum)
The minimum ambient temperature at which the lamp will start reliably on the ballast.

T12, T8, T5
A designation for the diameter of a tubular bulb in eighths of an inch; T12 is 12 eighths of an inch, or 1-1/2 inches; T8 is 1 inch, and so on.

Task Lighting
Supplemental lighting provided to assist in performing a localized task, e.g. a table lamp for reading or an inspection lamp for fabric inspection.

Terminal-to-Terminal Starting Lamp Voltage (VRMS) (Minimum or Maximum)
The minimum or maximum voltage allowed into lamp from ballast under varying conditions as specified.

TCLP Test
The Toxicity Characteristic Leaching Procedure (TCLP) test, specified in the Resource Conservation and Recovery Act (RCRA) of 1990, is used to characterize fluorescent lamp waste as hazardous or nonhazardous waste. The TCLP test measures the ability of the mercury and/or lead in a lamp to leach from a landfill into ground water.

THD (see TOTAL HARMONIC DISTORTION).

TM21
Technical Memorandum developed by the Illuminating Engineering Society to provide method for projecting lumen maintenance of an LED source, array or module as a function of temperature. This will allow LED Luminaire manufacturers to predict lumen depreciation in their fixtures, based on the operating temperature of the LED in that package. See also, "L70, L85, etc."

Total Harmonic Distortion (THD)
A measure of the distortion of the input current on alternating current (AC) power systems caused by higher order harmonics of the fundamental frequency (60Hz in North America). THD is expressed in percent and may refer to individual electrical loads (such as a ballast) or a total electrical circuit or system in a building. ANSI C82.77 recommends THD not exceed 32% for individual commercial electronic ballasts, although some electrical utilities may require lower THDs on some systems. Excessive THDs on electrical systems can cause efficiency losses as well as overheating and deterioration of system components.

Transients
High voltage surges through an electrical system caused by lightning strikes to nearby transformers, overhead lines or the ground. May also be caused by switching of motors or compressors, as well as by short circuits or utility system switching. Can lead to premature ballast failure (see TVSS).

TRIAC
Genericized tradename for "Triode for Alternating Current," a device at the heart of many common residential dimmers. TRIACS reduce the current by "chopping off" portions of the AC waveform, and may adversely affect ballasts and drivers that are not designed to accept such waveform inputs.

Troffer
A long, recessed lighting unit, usually installed in an opening in the ceiling.

Tungsten Halogen Lamp (see HALOGEN LAMP).

TVSS
Transient Voltage Surge Suppressors, which will protect ballasts and other electronic equipment from transient high-voltage spikes that may be present in the power line.

Two-Pin Compact Fluorescent Lamps
Type of lamps that have the glow bottle starter built into the base of the lamp. Traditionally 2-pin lamps are designed to work with electromagnetic ballasts (see FOUR-PIN COMPACT FLUORESCENT LAMPS).

Ultra
A common way of referring to high-efficiency GE T8 family of lamps and Ballast that performs better than standard T8 lamps. Also refers to the system.

UltraMax® Ballast
A family of high-efficiency GE instant-start electronic linear fluorescent ballasts designed to optimize GE's T8 Ultra lamps for enhanced system energy savings. UltraMax® ballasts have a low lamp current crest factor and virtually "read" and adapt to incoming voltage from 108V to 305V. Other features include UL Type CC Anti-Arc Rating and anti-striation control to eliminate lamp striations and spiraling. GE also has an UltraMax® HID ballast which can operate PulseArc® and CMH® lamps anywhere from 250 watts to 400 watts and provides greatly improved lumen maintenance.

UltraStart® Ballast
A family of high-efficiency GE Program Start electronic linear fluorescent ballasts designed to optimize GE's T8 Ultra lamps in frequently switched applications. Instant-start ballast provides 10,000 starts. UltraStart® provides 100,000 to 200,000 starts. Use program start ballast to ensure long lamp life when turning lamps on and off more that twice a day.

Ultraviolet (UV) Radiation
For practical purposes, any radiant energy within the range of 100–380 nanometers. It is beyond the blue or violet region of the spectrum, and is invisible to the eye just like the silent "ultrasound" dog whistle is inaudible to the ear.

UV is divided into 3 regions:

UVC	100 to 280 nm
UVB	280 to 315 nm
UVA	315 to 400 nm

Some wavelengths (180–220) produce ozone, some (220–300) are bactericidal, some (280–320) erythemal (redden human skin); others (320–400) cause secondary luminance (black light).

Ultra Watt-Miser®
GE's family of energy-saving T8 fluorescent lamps.

Underwriters Laboratories (UL)
A private organization which tests and lists electrical (and other) equipment for electrical and fire safety according to recognized UL and other standards. A UL listing is not an indication of overall performance. Lamps are not UL listed except for compact fluorescent lamp assemblies – those with screw bases and built-in ballasts.

Glossary of Terms

Uniform Product Code (UPC)
The 12-digit code on the saleable unit that is used for scanning at the register.

Veiling Reflection
Effective reduction in contrast between task and its background caused by the reflection of light rays; sometimes called "reflected glare." You might have dealt with veiling reflections when you have to tilt a shiny magazine to avoid glare so as to read it, or struggled with reading a computer monitor because of the reflection of a window or a light fixture.

Visual Comfort Probability (VCP)
For a given lighting scheme, VCP is a ratio expressed as a percent of people who, when viewing from a specific location and in a specified direction, find the system acceptable in terms of glare (see GLARE).

Volt
A measure of "electrical pressure" between two points. The higher the voltage, the more current will be pushed through a resistor connected across the points. The volt specification of an incandescent lamp is the electrical "pressure" required to drive it at its designed point. The "voltage" of a ballast (e.g. 277 V) refers to the line voltage it must be connected to.

Voltage
A measurement of the electromotive force in an electrical circuit or device expressed in volts. Voltage can be thought of as being analogous to the pressure in a waterline.

Voltage Surge
Transient spikes in line voltage that can be harmful to electronic equipment like computers and electronic ballasts. Surge suppressors are often used to protect against such transients.

Wall Temperature (Maximum Bulb)
The maximum operating bulb wall temperature in Celsius.

Warm-Up Time
HID lamps typically take a few minutes to warm up to full brightness after starting.

Warm-Up Time to 90%
The time it takes for a High Intensity Discharge lamp to reach 90% of light output after being turned on.

Warm White
Refers to a color temperature around 3000K, providing a yellowish-white light.

Watt
A unit of electrical power. Lamps are rated in watts to indicate the rate at which they consume energy (see KILOWATT HOUR).

Wattage Indicator Reduced
Indicates that this is a reduced wattage option for lamps normally used in this application. Be sure to check wattage, lumens and life to determine which lamp is best suited to your needs.

Watt-Miser®
A Watt-Miser® lamp is a term used by GE to indicate a reduced-wattage lamp with performance characteristics (life, light output, etc.) such that it can usually directly replace a higher-wattage product. Watt-Miser® lamps are available in a wide range of incandescent, fluorescent and HID lamp types.

Wavelength
The distance between two neighboring crests of a traveling wave. The wavelength of light is between 400 and 700 nanometers.

The Value of Lighting Upgrades

About 35% of the electricity bill of commercial and industrial buildings is lighting. Upgrading to more energy-efficient lighting is an easy way to significantly reduce the overhead costs of running a business. Additional savings can be realized from using long-life lamps that reduce maintenance costs. Further, energy-efficient lighting also reduces the air-conditioning load on the HVAC system and provide greater energy savings.

Users need to be reminded that energy is usually the highest portion of the cost of lighting. A single T12 lamp will use about $100 of energy over its life; a single 400W metal halide lamp will use over $1000 in energy over life.

Remember, the products currently used in many buildings today are using products that are effectively obsolete due to technology improvements that have occurred over the last few years. There are several additional reasons to consider lighting upgrades today.

1) Legislation: many less-efficient products are being phased out by Government regulation. In each case there are better, more efficient, longer life replacements available that bring benefit both to the end-user and to the national economy because of energy savings.
2) Energy Reduction, both direct and indirect HVAC
3) Improvements in ambiance, productivity and user-satisfaction
4) Maintenance savings from longer life products
5) Environmental benefits from reduced energy consumption leading to reduced emissions, reduced or no-mercury, longer life.
6) Rebates offered by many utility companies. These rebates may go away as more and more inefficient products are eliminated
7) Tax deduction provisions of the Energy Policy Act (EPASCT) for lighting upgrades completed by end of 2013

Upgrades can involve something as simple as unscrewing the old bulb and screwing in the new bulb. However, in many cases ballasts and lamps are replaced in the existing fixture, or a retrofit kit is used to insert new holders and reflectors. Sometimes it is economically justified to replace the entire fixture with e new fixture.

Affected products that have been eliminated by legislation or are facing elimination in the immediate future based on efficiency requirements are listed in the next column:

Products Eliminated by Legislation

Incandescent Bulbs: Incandescent bulbs convert only 4% to 7% of the electrical energy into light; the rest is wasted as heat. Legislation in the US and many other countries is progressively banning the use of incandescent bulbs in most regular applications. A single incandescent 100-watt bulb operated for an entire year (8760 hrs.) will require the burning of over 1000 pounds of coal in a coal-fired power plant to generate the electricity it uses. Replacing it with an efficient LED or CFL (Compact Fluorescent Lamp) will cut energy consumption and greenhouse gas emission by 75% in addition to saving over $70 per socket at the prevailing average national energy rate of 11 cents per kWh. These products also last 10 times to 30 times longer!

Halogen Reflector Lamps: Although more efficient than standard incandescent lamps, halogen lamps are still using a hot tungsten filament to generate light. The latest HIR+ product s from GE use an infra-red reflecting film in the filament tube, and silverized reflectors to increase performance. Upgrading to these HIR+ products or to significantly more efficient, long life LED products provide significant energy savings. In many cases CMH (ceramic Metal Halide) reflector lamps can be considered, either with integral ballasts or with external ballasts. Halogen floods can be replaced with CFLs.

T12 Linear Fluorescent Lamps and some lower-performing T8s: These have been legislated away since very efficient, high-performance T8 systems are available. Also, LED fixtures are becoming a viable option to be considered for offices and classrooms. It is possible to obtain up to 45% energy savings with out loss of light when upgrading from T12 systems.

Standard Metal Halide lamps and ballasts: The old "probe start" metal halide lamps on magnetic ballasts are now eliminated by legislation for new construction, although replacement products for existing installations are still available. Upgrade options include Pulse-Start or CMH (Ceramic Metal Halide) on magnetic or electronic ballasts. For Industrial and High-bay attractive financial returns can be obtained by going to multi-lamp T8 or T5/HO fixtures. In outdoor lighting applications like parking lots and roadway, many users are upgrading from HID to LED fixtures for energy and maintenance savings.

Contact your GE distributor or GE sales rep for a simple lighting audit and a financial analysis of the benefits of lighting upgrades at your facility.

LEDs for General Lighting

LED (Light Emitting Diode) is a semiconductor chip that emits visible light when energized. LEDs are also referred to as solid state lighting (SSL) devices.

One of the first references to LEDs came in 1907 when Marconi's assistant Henry Round reported it in a letter to Electrical World after observing light emission from carborundum (silicon carbide, SiC). Round was experimenting with cat's whisker detectors, a device used in early crystal radios. Later, in 1920 the Russian scientist Oleg Losov studied the phenomenon in greater detail, publishing a number of papers on the current-voltage characteristics of SiC.

However the modern father of visible LEDs is considered to be Nick Holonyak who invented a red LED in 1962 while working at a GE lab in Syracuse, NY. Later, he moved to the University of Illinois at Urbana and a student of his, George Craford went on to invent yellow, orange and green LEDs. Finally, in the 1990s, several researchers at Nichia laboratories in Japan found ways to make efficient blue LEDs and the modern white LED was born.

Light emission from LEDs

LEDs are made of semiconducting material, not unlike what is found in transistors and computer chips. Electrons from the "n" or negative material flow into the "p" or positive material across a junction, where they encounter "holes" . When an electron falls into a hole a photon is emitted corresponding in energy to the energy lost by the electron.

If this primary photon is in the blue region of he spectrum, it is possible to add phosphors that absorb the high energy blue photon and re-emit lower energy photons of green, yellow, orange or red colors. Based on the thickness and composition of the phosphor, the color of the LED source can be changed from blue to cool white to very warm white. In general, the higher color temperature LEDs (cool color) have less phosphors and are more efficient with higher lumens per watt (LPW). Warm LEDs have to use more phosphor and pay a small price in LPW if the warmer color is desired.

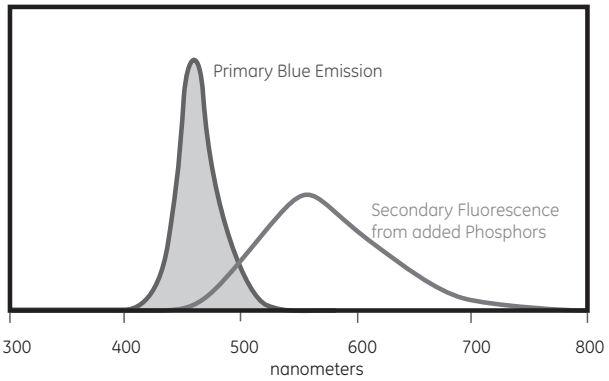

Obtaining white light from blue LEDs

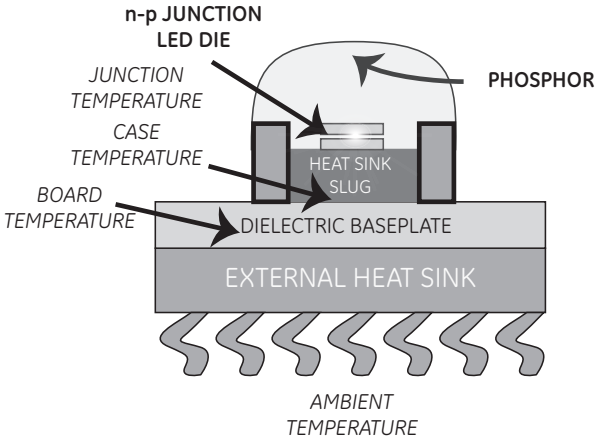

Schematic of an LED Device

Key determinants of performance

Long-term performance of LEDs is critically determined by the junction temperature of the LED—the junction being the layer where most of the primary light emission is occurring. Even though each individual LED generates only about a watt of heat, this heat can destroy the semiconductor material if it is not rapidly conducted away.

The LED chip manufacturer will often rate the LED at 100,000 hours based on the junction temperature being kept below a specified point. If overheated, a 100,000 hour LED can easily die in 10,000 hours or 1000 hours, or even 100 hours.

Thermal management of the LED, achieved through well designed heat-sinks and conduction paths is the key factor that determines LED longevity. Reliable life testing of LEDs in the finished configuration under field conditions is the only way to determine how long an actual lamp or fixture is likely to last. ANSI standard TM21 specifies how to test and rate LED life and all reputable LED manufacturers will refer to this document to validate their life ratings.

Sorting (binning) of LEDs

LED manufacturers constantly work to manage process variation and maximize yield. To this end, LEDs are sorted by three criteria—forward voltage, light output and color—and placed in appropriate "bins." ANSI requirements call for roughly a "seven step" equivalent cell, each step being the minimum color difference perceptible to the human eye. However, for more demanding applications, it is possible to pay a little more and require tighter binning, e.g. to three-steps.

The Future of LEDs

LEDs are the most promising breakthrough in Lighting in half a century. The boundaries of efficiency and life are being extended almost on a daily basis. The US Department of Energy says, "... Light Emitting Diodes (LEDs), has the potential to revolutionize the efficiency, appearance, and quality of lighting as we know it." Some experts estimate that LEDs might approach 200 lumens per watt within a few years.

Ballast cross reference matrix

Prod Code	Description	Advance P/N	Universal P/N	OSI P/N
T8 Fluorescent Ballasts				
T8 INSTANT START BALLASTS				
UltraMax® Professional Series Instant Start Multi-Voltage High Efficiency				
72258	GE132MAXP-L/ULTRA	IOP-1P32LW-SC	B132IUNVEL-A	QHE1X32T8/UNV ISL-SC-1
72259	GE132MAXP-N/ULTRA	IOP-1P32-SC	B132IUNVHE-A	QHE 1X32T8/UNV ISN-SC-1
63885	GE132MAXP-H/ULTRA	IOP-1P32HL-SC		NA
73190	GE232MAXP-H/ULTRA	IOP-2P32HL-SC	B232IUNVHEH-A	QHE2X32T8/UNV-HT-SC-1
72262	GE232MAXP-L/ULTRA	IOP-2P32LW-SC	B232IUNVEL-A	QHE2X32T8/UNV ISL-SC-1
72266	GE232MAXP-N/ULTRA	IOP-2P32-SC	B232IUNVHE-A	QHE 2X32T8/UNV ISN-SC-1
71421	GE232MAXP-N+		NA	QHE 2X32T8/UNV ISM-SC
71714	GE332MAXP-H/ULTRA	IOP-3P32HL-90C-SC	B332IUNVHEH-A	NA
71717	GE332MAXP-L/ULTRA	IOP-3P32LW-SC	B332IUNVEL-A	QHE3X32T8/UNV ISL-SC-1
71719	GE332MAXP-N/ULTRA	IOP-3P32-SC	B332IUNVHE-A	QHE 3X32T8/UNV ISN-SC-1
71422	GE332MAXP-N+			QHE 3X32T8/UNV ISM-SC
71723	GE432MAXP-H/ULTRA	IOP-4P32HL90CG		QHE4X32T8/UNV-HT-SC-1
71725	GE432MAXP-L/ULTRA	IOP-4P32LW-SC	B432IUNVEL-A	QHE4X32T8/UNV ISL-SC-1
71727	GE432MAXP-N/ULTRA	IOP-4P32-SC	B432IUNVHE-A	QHE 4X32T8/UNV ISN-SC-1
74117	GE632MAXP-H90		NA	NA
71423	GE432MAXP-N+		NA	QHE 4X32T8/UNV ISM-SC
72261	GE159MAXP-N/ULTRA	IOP-2P59-SC	NA	NA
73199	GE259MAXP-L/ULTRA		B259I120HPL / B259I277HPL	QHE 2x59T8/UNV-ISI-SC
49767	GE259MAXP-N/ULTRA	IOP-2P59-SC	NA	QHE 2x59T8/UNV ISN-SC-B
UltraMax® Professional Series Instant Start 347V High Efficiency				
67435	GE232MAXP347-N+	NA	NA	
74093	GE232MAXP347-N	GOPA-2P32-SC		QHE2X32T8/347 ISN-SC
74094	GE332MAXP347-N	GOPA-3P32-SC		QHE3X32T8/347 ISN-SC
74095	GE432MAXP347-N	GOPA-4P32-SC		QHE4X32T8/347 ISN-SC
74096	GE232MAXP347-L	GOPA-2P32-LW-SC	B232I347L-A, B232I347HPL	QHE2X32T8/347 ISL-SC, QT2X32T8/347 ISL-SC
74097	GE332MAXP347-L	GOPA-3P32-LW-SC	B332I347L, B332I347HPL	QHE3X32T8/347 ISL-SC
74098	GE432MAXP347-L	GOPA-4P32-LW-SC	B432I347L, B432I347HPL	QHE4X32T8/347 ISL-SC, QT4X32T8/347 ISL-SC
74109	GE232MAXP347-H			QT2X32T8/347 ISH-SC
74111	GE332MAXP347-H		B332IHRVH-E, B332IHRVHB-E	
74113	GE432MAXP347-H			
UltraMax® Professional Series T8 Instant Start 480V High Efficiency				
62718	GE232MAXP480-H			
62719	GE332MAXP480-H		B332IHR VHB-E	
62720	GE432MAXP480-H			QHE4X32T8/347-480 ISH-HT
UltraMax® General Series T8 Multivolt 120V - 277V				
72269	GE132MAX-G-N	ICN-1P32-SC / IOPA-1P32-SC	B132IUNVHP-B	QTP 1X32T8/UNV ISL-SC/ QHE 1X32T8/UNV ISN-SC
74803	GE232MAX-G-H	IOPA-2P32-HL	B232I120RHH-A/B232I277RHH-A	QTP 2X32T8/UNV ISH-SC/ QHE 2X32T8/UNV ISH-SC
67911	GE432MAX-G-H	IOP-4P32HL-SC	B4321277HEH	
72273	GE232MAX-G-L	ICN-2P32LW-SC / IOPA-2P32LW	B232I120L-A/B232I277L-A	QTP 2X32T8/UNV ISL-SC/ QHE 2X32T8/UNV ISL-SC
72275	GE232MAX-G-N	ICN-2P32-SC / IOPA-2P32-SC	B232IUNVHP-B	QTP 2X32T8/UNV ISN-SC/ QHE 2X32T8/UNV ISN-SC
74461	GE332MAX-G-H	IOPA-3P32-HL	B332I120RHH-A/B332I277RHH-A	QTP 3X32T8/UNV ISH-SC/ QHE 3X32T8/UNV ISH-SC
74459	GE332MAX-G-L	ICN-3P32LW-SC / IOPA-3P32LW	B332I120L-A/B332I277L-A	QTP 3X32T8/UNV ISL-SC/ QHE 3X32T8/UNV ISL-SC
74456	GE332MAX-G-N	ICN-3P32-SC / IOPA-3P32-SC	B332IUNVHP-B	QTP 3X32T8/UNV ISN-SC/ QHE 3X32T8/UNV ISN-SC
69711	GE432MAX-G-H	IOPA-4P32-HL	B432I120RHH-A/B432I277RHH-A	QHE 4X32T8/UNV ISH-SC
74466	GE432MAX-G-L	ICN-4P32LW-SC / IOPA-4P32LW	B432I120L-A/B432I277L-A	QTP 4X32T8/UNV ISL-SC/ QHE 4X32T8/UNV ISL-SC
30193	GE432MAX-G-N	ICN-4P32-SC IOPA-4P32SC	B432IUNVHP-B	QTP 4X32T8/UNV ISN-SC/ QHE 4X32T8/UNV ISN-SC
72271	GE159MAX-G-N			
74469	GE259MAXP-G-N	NA	B259IUNVHP-B	QTP 2X59T8/UNV ISN-SC/ QHE 2X59T8/UNV-ISN-SC
UltraMax® Professional Series T8 Instant Start High Output				
63888	GE286MAXP-HO-N	ICN-2S86	B286I120RH / B286I277RH	QHE 2X86T8HO/UNV-PSN-HT-SCL/ QHE2X59T8/UNV-ISH
UltraMax® General Series T8 Multivolt 347V				
74101	GE132MAX-G-N-347		B132I347HP, B132I347RH	QHE1X32T8/347 ISN-SC, QTP1X32T8/347 /ISN-SC
74103	GE232MAX-G-N-347		B232I347HP-A, B232I347RH-A	QTP2X32T8/347 ISN-SC
74105	GE332MAX-G-N-347		B332I347HP	QT3X32T8/347 ISN-SC
74107	GE432MAX-G-N-347		B432I347HP, B432I347RH	QT4X32T8/347 ISN-SC
74099	GE259MAX-G-N-347		B259I347HP	QT2X59/347 IS

See page E-1 for warranty information.

Ballast cross reference matrix (cont.)

Prod Code	Description	Advance P/N	Universal P/N	OSI P/N
T8 Fluorescent Ballasts - Continued				
T8 INSTANT START BALLASTS - CONTINUED				
Residential Grade ProLine® T8 120V				
97782	GE232-120-RES	REB232-SC	B232I120RES-A	QTR 2x32T8/120 ISN-SC
97783	GE432-120-RES	REB4P32-SC	B432I120RES-A	QTR 4x32T8/120 ISN-SC
Electromagnetic T8 Ballasts				
87125	GEM232T8RS120	R-2P32-TP	M232SR120C	
T8 PROGRAM START BALLASTS				
UltraStart® T8 Program Rapid Start				
75952	GE132-MVPS-L	IOP-1S32-LW-SC		QTP 1x32T8/UNV PSX-TC
75953	GE132-MVPS-N	IOP-1S32-SC	B132PUNVHP-A	QTP 1X32T8/UNV PSN-TC
75954	GE132-MVPS-H			
96714	GE232-MVPS-N	IOP-2S32-SC	B232PUNVHP-A	QTP 2X32T8/UNVPSN-TC
96720	GE232-MVPS-L	IOP-2S32-LW-SC		QTP 2X32T8/UNV PSX-TC
29675	GE-232-MVPS-H			QHE2x32T8/UNV-PSH-HT
29671	GE-232-MVPS-XL			
29676	GE-332-MVPS-H			
96715	GE332-MVPS-N	IOP-3S32-SC	B332PUNVHP-A	QTP 3X32T8/UNVPSN-SC
96721	GE332-MVPS-L	IOP-3S32-LW-SC		QTP 3X32T8/UNV PSX-SC
29672	GE-332-MVPS-XL			QHE3x32T8/UNV-PSH-HT
96716	GE432-MVPS-N	IOP-4S32-SC	B432PUNVHP-A	QTP 4X32T8/UNVPSN-SC
71832	GE432-MVPS-L	IOP-4S32-LW-SC		QTP 4X32T8/UNV PSX-SC
29678	GE-432-MVPS-H			QHE4x32T8/UNV-PSH-HT
T8 Bi-Level Instant Start Step Dimming 100% to 60%				
73233	GE232MAXP90-S60			
73231	GE332MAXP90-S60			
73229	GE432MAXP90-S60			
71497	GE632MAXP-H90-S60			
T8 Bi-Level Instant Start Load Shedding 100% to 60%				
73234	GE232MAXP90-V60			
73232	GE332MAXP90-V60			
73230	GE432MAXP90-V60			
71731	GE632MAXP-H90-V60			
T8 Bi-Level Program Start Step Dimming 100% to 30%				
68966	GE132MVPS-N-S30			
68967	GE232MVPS-N-S30	IOP-232-SC-SD	B232PUS50PLA	QHES2x32T8PSN
68968	GE132MVPS-L-S30			QHES2x32T8PSL
T8 Program Start 0-10v Dimming 100% to 3%				
75379	GE132MVPS-N-V03	IZT-132-SC	B132R120V5 / B132SR277V5	
75380	GE232MVPS-N-VO3	IZT-232-SC/ ILV-2S32-SC	B232SR120V5 / B232SR277V5	
75381	GE332MVPS-N-VO3	IZT-332-SC	B332SR120V5 / B332SR277V5	
75382	GE432MVPS-N-VO3	IZT-432-SC/ ILV-4S32-G	B423SR120V5/ B432SR277V5	QTP 4x32T8/ 277 DIM PLUS-TCL
75383	GE232MVPS-H-V03			
75384	GE332MVPS-H-V03			
75385	GE432MVPS-H-V03			
T5 Fluorescent Ballasts				
T5 ELECTRONIC PROGRAMMED START BALLASTS				
UltraStart® T5 Programmed Rapid Start				
68994	GE228MVPSH-MC-H	IOP2S28115SC	B228PUNV115-D	QTP2X28T5/UNVPSN NL
68993	GE228MVPS-MC	IOP2S2895SC	B228PUNV95-D	QTP2X28T5/UNVPSN-E
68976	GE-224MVPS-N	ICN-2S24	B224PUNV-D	QTP2X39-24T5HO/UNVPSN NL
47540	B239PUNV-D	ICN-2S39	B239PUNV-D	QTP2X39-24T5HO/UNVPSN NL
67562	GE254MVPS90-A	ICN-2S54-90C	B254PUNV-D	QTP 2X54T5HO/UNV PSN HT
33957	GE254MVPS-D-1	ICN-2S54	B254PUNV-D	QTP2X54T5HO/UNVPSN NL
94131	GE454MVPS90-E-S	ICN4S5490C2LSG	B454PUNV-E	QTP 4X54T5HO/UNV PSN HTW NL
67566	GE454MVPS90-F	ICN4S5490C2LS		QTP 4X54T5HO/UNV PSN HT
72280	GE180MVPS-D	ICN-1S80-120V / ICN-1S80-277V	ES4515K	QTP1X80T5HO/UNVPSN NL
UltraStart® T5 Programmed Rapid Start 347-480V				
62728	GE254PS347/480-F	HOP2PSP54L/347-480V	B254PHRVHB-E	QHE2x54T5HO/347-480PSN-HT
62729	GE254PS347-F	HOP2PSP54L/347V		
62730	GE454PS347/480-E	HOP4PSP542LSG/347-480V		QHE4x54t5HO/347-480PSN-HT-SCL
62731	GE454PS347-F	HOP4PSP542LSG/347V		

See page E-1 for warranty information.

Prod Code	Description	Advance P/N	Universal P/N	OSI P/N
T12 Fluorescent Ballasts				
T12 ELECTRONIC BALLASTS				
ProLine® T12 Multivolt 120V - 277V				
74472	GE-240-RS-MV-N	ICN-2S40-N	B240R120HP/B240R277HP	QTP2X40T12/120RSN-SC / QTP2x40T12/277 RSN-SC
97498	GE240RS120	REL-2S40-SC/RELB-2S40-SC	B234SR120M-A	QTP2X40T12/120RSN-SC
75672	GE140RS120	REL-1S40-SC	B134SR120M-A	QTP1X40T12/120/277RSN-SC
74474	GE-260-IS-MV-N	R2E75STP	B260IUNVHP	QT2x96/120IS/QT2x96/277IS
75671	GE296HO-MV-N	REL/VEL-2P60-S-A/REL/VEL-2S110	B295SR UNVHP/120HP/277HP	QT2x96/120HO/QT2x96/277HO
Magnetic Ballast				
68190	GEM1FC16T9RS120	RMS-3240-TP-W	726VLHWSTCP	
68193	GEM1FC8T9RS120IP	RLQS-122-TP-W	547RSWSTCP	
89717	GEM1FC12T9RS120	RS-22-32-TP-W	449LRWSTCP	
68192	GEM220TS120DIY	RS-2SP20-TP	447LRVLHTCP	
T12 Electronic for Magnetic				
72110	GE140RS120 DIY RES	LC-14-20-C-TP/ HM1P30TPI	200H2	
72110	GE140RS120 DIY RES	RLQ-120-TP	546BTCP	
72110	GE140RS120 DIY RES	R-140-TP	412LSLHTCP	
72110	GE140RS120 DIY RES	RL-140-TP	413CTCP	
97498	GE240RS120 RES	R2S34-TPI/ RS240TPI	420LTCP	
97498	GE240RS120 RES	RM2SP30TPI	446LSLHTCP	
74472	GE-240-RS-MV-N	V2S40TP / V2S34TPI/ V140TPI	443LSLHTCP	
74472	GE-240-RS-MV-N	MTM-2S40-TP	754LTCP	
74474	GE-260-IS-MV-N	RSM175STP/ SM140STPI / SM2E40STPI	822BRTCP	
74474	GE-260-IS-MV-N	VSM175STP	828BRTCP	
74474	GE-260-IS-MV-N	R2E75STP	806SLHTCP	
74474	GE-260-IS-MV-N	V2E75STP	827SLHTCP	
75671	GE296HO-MV-N	R-2S110-TP/ RC2S85TPM	480SLHTCP	
75671	GE296HO-MV-N	V-2S110-TP/ VC2S85TPM	487SLHTCP	
Sign Ballasts				
72103	GESB-0412-12-IP	ASB-0412-12-BL-TP	USB-0412-12-IP	MSB-12-0412-TP
72104	GESB-0620-24-IP	ASB-0620-24-BL-TP	USB-0816-14-IP	MSB-24-0620-TP
72105	GESB-1224-24-IP	ASB-1224-24-BL-TP	USB-1024-14-IP	MSB-24-1224-TP
72106	GESB-1240-46-IP	ASB-1240-46-BL-TP	USB-2036-46-IP	MSB-46-1240-TP
72107	GESB-2040-46-IP	ASB-2040-24-BL-TP	USB-1632-24-IP	MSB-24-2040-TP
72108	GESB-2448-46-IP	ASB-2448-46-BL-TP	USB-2048-46-IP	MSB-46-2448-TP
Compact Fluorescent Ballasts				
CFL ELECTRONIC				
63091	GEC213-MVPS-BES	ICF-2S13-BS	C213UNVBS	QTP1/2X13CF/UNVBS
63092	GEC213-MVPS-SE	ICF-2S13-LD	C213UNVBES	QTP1/2X13CF/UNVTS
63089	GEC213-MVPS-3W	ICF-2S13-H1-LD-K	C213UNVME00K	QTP 1/2x13CF/UNV
63094	GEC218-MVPS-BES	ICF-2S18-BS	C218UNVBS	QTP1/2X18CF/UNVBS
63096	GEC218-MVPS-SE	ICF-2S18-LD	C218UNVBES	QTP1/2X18CF/UNVTS
63093	GEC218-MVPS-3W	ICF-2S18-H1-LD-K	C218UNVME000K	QTP 1/2x18CF/UNV
63098	GEC226-MVPS-BES	ICF-2S26-BS	C2642UNVBES-IP	QTP2X26CF/UNVBS
63099	GEC226-MVPS-SE	ICF-2S26-LD	C2642UNVSE-IP	QTP2X26CF/UNVTS
63097	GEC226-MVPS-3W	ICF-2S26-H1-LD-K		QTP 1/2x26CF/UNV
63101	GEC242-MVPS-BES	ICF-2T42-M5-BS	C2642UNVBE	QTP2X26/32/42CF/UNVPM
63102	GEC242-MVPS-SE	ICF-2T42-M5-LS	C2642UNVSE	QTP2X26/32/42CF/UNVTM
63100	GEC242-MVPS-3W	ICF-2T42-M5-BS	C2642UNVSE	QTP2X26/32/42CF/UNVTM
75948	GEC140MAX-A	ICN-1TTP40		
75950	GEC225MVPS-A			
71437	GEC240MVPS-A	REL-2TTS40	C240PUNVHP-B-IP	QHE 1x40/UNV DL ISN-SC
71435	GEC240MAX-A	RCN-2TTP40-SC / VCN2TTP40-SC / ICN-2TTP40-SC	C240SI120RH-IP / C240SI277RH-IP	QHE 2x40/UNV DL ISN-SC
71436	GEC340MAX-A	RCN-3TTP40-SC / VCN-3TTP40-SC/ ICN3TTP40-SC	C340SI120RH-IP/C340SI277RH-IP	QHE 3x40/UNV DL ISN-SC
87533	GEM1CF13PH120	LC-13-TP	4111H2P	
87655	GEM2CF13PH277	VH-2B13-TP-BLS	4214PBES	

See page E-1 for warranty information.

Ballast cross reference matrix (cont.)

Prod Code	Description	Advance P/N	Universal (Vossloh Schwabe)	OSI P/N
HID Electronic Ballasts				
87490	GEMH20-MLF-120	RMH-G20-K	M2012CK-7EUN-F	QTP1X20MH/UNV F
74115	GEMH20-MC-120	RMH-G20-K	M2012CK-7EUN-F	
63042	GEMH20-MSJ-MV	IMH-G20-G	M2012-27CK-6EU-J	
63043	GEMH20-MSF-MV	IMH-G20-G	M2012-27CK-5EU-F	
75378	GEMH39-MCM-120	RMH-39-K	M3912CK-7EUN	
74116	GEMH39-MC-120	RMH-39-K	M3912CK-6EUN-F	
87501	GEMH39-MSF-120	RMH-39-K	M3912CK-7EUN	QTP1X39MH/UNV F
63044	GEMH39-MSJ-MV	IMH-39-G	M3912-27CK-5EU	
63045	GEMH39-MSF-MV	IMH-39-E	M3912-27CK-6EU-F	
87531	GEMH70-MSF-120	IMH-70-G	M7012CK-6EUN-F	QTP1X70MH/UNV F
87546	GEMH70-SLJ-MV	IMG-70-G	M7012-27CK-5EU	QTP1X70MH/UNV J
87561	GEMH100-SLJ-MV	IMG-100-A-BLS	M10012-27CK-5EU-F	QTP1X100MH/UNV J
87576	GEMH150-SLJ-MV	IMG-150-H-BLS	M15012-27CK-5EU-J	
HID Electromagnetic Ballasts				
Metal Halide				
63073	GEM50MLTLA3D-5	71A5181-500D	M50MLTLC3M500K	M50/MULTI-KIT
86847	GEM70MLTLA3D-5	71A5280-500D	M70MLTLC3M500K	M70/MULTI-KIT
78517	GEM70TRILC3-5	71A52A2-001D	M70TRILC3M502K	
67337	GEM7048TLA3D-5	NA	M7048TLC3M500K	
86675	GEM100MLTLA3D-5	71A5390-001D	M100MLTLC3M500K	M100/MULTI-KIT
78519	GEM100TRILC3-5	71A53A0-001D	M100TRIL3M502K	
67333	GEM10048TLA3D-5	71A5340-500DT	M10048TLC3M500K	
86718	GEM150MLTLC3D-5	71A5492-500D	M150MLTLC3M500K	M150/MULTI-KIT
78520	GEM150TRILC3-5	71A54A2	M150TRIL3M502K	
86711	GEM15048TLC3D-5	71A5442-500DT	M15048TLC3M500K	
63078	GEM175ML5AA3-5	71A3042-001D	M175ML5AC3M500K	
78521	GEM175TRIAC3-5	71A55A0-0001D	M175TRIAC30502K	
86741	GEM175MLTAA3-5	71A5570-001D	M175MLTAC3M500K	M175/MULTI-KIT
87211	GEM250ML5AC3-5	71A5750-001D	M250ML5AC3M500K	
86741	GEM250MLTAA3-5	71A3542-001D	M250MLTAC3M500K	M1250/MULTI-KIT
78522	GEM250TRIAC4-5	71A56A0-001D	M250TRIAC4M502K	
87212	GEM250ML5AA4-5	71A5750	M250ML5AC4M500K	
72300	GEM400ML5AA4-5	71A6051-001D	M400ML5AC4M500K	
72149	GEM400MLTAA4-5	71A6071-001D	M400MLTAC4M500K	M400/MULTI-KIT
78523	GEM400TRIAC4-5	71A60A1-001D	M400TRIAC4M502K	
63070	GEM40048TAA4-5	71A6042-500DT	M40048TAC4M500K	
78524	GEM1000TRIAC5-5	71A67A2-001	M1000TRIAC5M502K	
63069	GEM100048TAA5-5	71A6542-001	M100048TAC5M500K	M1000/480-KIT
87213	GEM1000ML5AA5-5	71A6552-001	M1000ML5AC5M500K	
86655	GEM1000MLTAA5-5	71A6572-001	M1000MLTAC5M500K	M1000/MULTI-KIT
86693	GEM150048TAC5-5	71A6742-001	M150048TAC5M500K	M1500/480-KIT
86698	GEM1500MLTAC5-5	71A6772-001	M1500MLTAC5M500K	M1500/MULTI-KIT
Pulse Start				
67335	GEP175MLTAA3-5	71A5593-001D	P175MLTAC3M500K	
78525	GEP175TRIAC3-5	71A55A3	P175TRIAC3M502K	
86876	GEP17548TAC3-5	71A5543-500DT	P17548TAC3M500K	
78526	GEP200TRIAC3-5	71A56A2	P200TRIAC3M502k	
67344	GEP250MLTAA4-5	71A5792-001D	P250MLTAC4M500K	M250/MULTI-PS-KIT
78527	GEP250TRIAC4-5	71A57A2	P250TRIAC4M502K	
86926	GEP25048TAC4-5	71A5742-500DT	P25048TAC4M500K	M250/480-PS
86959	GEP320MLTAC4-5	71A5892-001D	P320MLTAC4M500K	M320/MULTI-PS-KIT
78528	GEP320TRIAC4-5	71A59A2	P320TRIAC4M502K	
67342	GEP32048TAA4-5	71A5842-500DT	P32048TAC4M500K	M320/480-PS-KIT
78529	GEP350TRIAC4-5	71A59A3	P350MLTAC4M500K	
67346	GEP350MLTAA4-5	71A5993-001D	P350MLTAC4M500K	
78530	GEP400TRIAC4-5	71A60A2	P400TRIAC4M502K	
67341	GEP40048TAA4-5	71A6042-500DT	P40048TAC4M500K	M400/480-PS-KIT
67347	GEP400MLTAA4-5	71A6092-001D	P400MLTAC4M500K	M400/MULTI-PS-KIT
78531	GEP750TRIAC5-5	71A64F0-T	P750TRIAC5M502K	M750/120/277/347/480-PS-KIT
67343	GEP75048TAA5-5	71A64F2-500DT	P75048TAC5M500K	
67350	GEP750MLTAA5-5	71A64E2-500D	P750MLTAC5M500K	
78532	GEP1000TRIAC5-5	71A65F1-T		M1000/120/277/347/480-PS-KIT
67348	GEP1000MLTAA5-5	71A6593-500	P1000MLTAC5M500K	
67349	GEP1000ML5AA5-5	71A6553-500	P1000ML5AC5M500K	

See page E-1 for warranty information.

Prod Code	Description	Advance P/N	Universal (Vossloh Schwabe)	OSI P/N
HID Electromagnetic Ballasts - Continued				
High Pressure Sodium				
87152	GES50MLTLC3D-5	71A7801-001D	S50MLTLC3M500K	LU50/DUAL-KIT
78533	GES50TRILC3-5			
86587	GES70MLTLC3D-5	71A7971-001D	S70MLTLC3M500K	LU70/MULTI-KIT
78534	GES70TRILC3-5	71A79A1-001D	S70TRILC3M502K	
86456	GES7048TLC3D-5	71A7941-001D	S7048TLC3M500K	
87074	GES100MLTLC3D-5	71A8001-001D	S100MLTLC3M500K	LU100/MULTI-KIT
78535	GES100TRILC3-5	71A80A1-001D	S100TRILC3M502K	
87068	GES10048TLC3D-5		S10048TLC3M500K	LU100/480-KIT
87094	GES150MLTLC3D-5	71A8172-001D	S150MLTLC3M500K	LU150/MULTI-KIT
78536	GES150TRILC3-5	71A81A2-001D	S150TRILC3M502K	
67339	GES15048TLC3D-5	71A8142-001D	S15048TLC3M500K	LU150/480-KIT
87214	GES250ML5AA4-5	71A8251-001D	S250ML5AC4M500K	
78537	GES250TRIAC4-5	71A82A1-001D	S250TRIAC4M502K	
87121	GES250MLTAA4-5	71A8271-001D	S250MLTAC4M500K	LU250/MULTI-KIT
63066	GES400ML5AC4-5	71A8453-001DF	S400ML5AC4M500K	
87164	GES400MLTAA4-5	71A8473-001D	S400MLTAC4M500K	LU400/MULTI-KIT
78539	GES400TRIAC4-5	71A84A3-001D	S400TRIAC4M502K	
87198	GES40048TAA4-5	71A8443-001D	S40048TAC4M500K	LU400/480-KIT
78540	GES1000TRIAC5-5	71A87A3-001	S1000TRIAC5M502K	
67351	GES100048TAA5-5	71A8743-001	S100048TAC5M500K	LU1000/480-KIT
87218	GES1000ML5AA5-5	71A8753-001	S1000ML5AC5M500K	
67352	GES1000MLTAA5-5	71A8773-001	S1000MLTAC5M500K	LU1000/MULTI-KIT
HID Lamp - Ballast Kits				
71701	GEM175ML5AC3-55	77L5570-001D		
71702	GEM250ML5AC3-55	77L5770-001D		
71703	GEM400ML5AC4-55	77L6051-001D		
71704	GEM1000ML5AC4-55	77L6552-001		
71705	GES100MLTLC3D-55	77L8071-001D-MED		
71706	GES250ML5AC4-55	77L8251-001D		
71707	GES400ML5AC4-55	77L8453-001D		
F-Can & Post Mount Metal Halide				
63046	GEMH50MVR-F	72C5181-NP	1120236CTC	
86576	11210277CTC000C	72C5280-NP	11210277CTC	
63047	GEMH70MVR-F	72C5282-NP	11210277CTC	
86578	11210506CTC000C	72C5282-NP	11210506CTC	
63048	GEMH100MVR-F	72C5381-NP	11210239CTC	
63049	GEMH150MVR-F	72C5482-NP	11210539CTC	
63050	GEMH175MVA-F	72C5581-NP	1110245SCTC	
63051	GEMH250MVA-F	72C5782-NP	1110246CTC	
63052	GEMH400MVA-F	72C6082-NP	1111-247SCTC	
80728	1111-247SCTC000I	72C6082-NP	1111-247SCTC	
F-Can & Post Mount HPS				
86605	1233142U000I	71A7907-001DB	1233142U000I	
86596	12210237CTC000I	72C7984-NP	12210237CTC000I	
86606	1233154U000I	71A8107-001DB	1233154U000I	
HID Ignitors				
75440	MH350-1A	LI553-H4-IC		
75441	MH750-1B	LI573-H5-IC		
86606	HPS150-3A	LI551-J4-IC		
86607	HPS400-3A	LI501-H4-IC		
HID CAPACITORS				
75434	GECAP-15/440V-O	7C150P40-R		
75435	GECAP-24/400V-O	7C240P40-R		
75668	GECAP-24/480V-O	MD2409-00		
75669	GECAP-12/280V-O			
75422	GECAP-35/240V-O	7C350P24RA		
75423	GECAP-5/240V-O	7C550P24RA		
75437	GECAP-12/280V-O			

See page E-1 for warranty information.

Discontinued Catalog Products

Prod Code	Description	Suggested Replacement	Prod Code
23671	GE-232-120-N	GE232MAX-G-N	72275
23672	GE-232-277-N	GE-232-MV-N	72275
23674	GE-332-277-N	GE-332-MV-N	74456
23675	GE-432-120-N	GE432MAX-G-N	74463
23676	GE-432-277-N	GE-432-MV-N	74463
23678	GE-259-277-N	GE259MV-N	74469
23680	GE-132-120-N	GE132MAX-G-N	72269
23681	GE-132-277-N	GE-132-MV-N	72269
23939	GE132MAX-N-DIY	NA	
23940	GE232MAX-N-DIY	NA	
23942	GE432MAX-N-DIY	NA	
24162	GE-132-277-N-84T	GE-132-MV-N-42T	72240
24164	GE-232-277-N-84T	GE-232-MV-N-42T	72276
24166	GE-332-277-N-84T	GE-332-MV-N-42T	74457
24168	GE-432-277-N-84T	GE-432-MV-N-42T	74464
24170	GE-259-277-N-84T	GE-259MV-N-42T	74470
24774	GE340RS-MV-N-DIY	NA	
29621	GE-232-120-PS-N	GE-232-MVPS-N	96714
29622	GE-232-277-PS-N	GE-232-MVPS-N	96714
29623	GE-332-120-PS-N	GE-232-MVPS-N	96714
29624	GE-332-277-PS-N	GE-332-MVPS-N	96715
29625	GE-432-120-PS-N	GE-432-MVPS-N	96716
29627	GE-432-277-PS-N	GE-432-MVPS-N	96716
29630	GE-232-120PS-N-T	GE-232-MVPS-N	96714
29632	GE-232-277PS-N-T	GE-232-MVPS-N	96714
29633	GE-332-120PS-N-T	GE-332-MVPS-N	96715
29634	GE-332-277PS-N-T	GE-332-MVPS-N	96715
29635	GE-432-120PS-N-T	GE-432-MVPS-N	96716
29650	GE-432-277PS-N-T	GE-432-MVPS-N	96716
29656	GE-332-MV-PS-H-T	GE332-MVPS-H-84TS	72753
29665	GE-232-MVPS-XL-T	GE-232-MVPS-XL	29671
29666	GE-332-MVPS-XL-T	GE-332-MVPS-XL	29672
73192	GE454MVPS90-G	GE454MVPS90-E-S	94131
29717	GE454MVPSN1-B	GE454MVPS90-G	73192
30187	GE-286-HO-MV-N-P	GE-286-HO-MV-N-P	30176
30189	GE-132-MV-N	GE-132-MV-N	72269
30191	GE-232-MV-N	GE-232-MV-N	72275
30219	GE432MV-H	GE432MV-H	78629
30247	GE-232-MV-L	GE-232-MV-L	72272
30268	GE-132-MV-N-42T	GE-132-MV-N-42T	72240
30269	GE-232-MV-N-42T	GE-232-MV-N-42T	72276
30303	GE-432-MV-H-42T	GE-432-MV-N-42T	74464
30308	GE-232-MV-L-42T	GE-232-MV-L-42T	72274
31052	GE232MAX-N-42T	GE232MAX-N-42T	72267
31053	GE332MAX-N-42T	GE332MAX-N-42T	71721
31054	GE432MAX-N-42T	GE432MAX-N-42T	71729
31055	GE332MAX-L-42T	GE332MAX-L-42T	71718
42670	1110-247SC-TC	NA	
42692	P350277RCEM500K	GEP350MLTAC4-5	86984
47532	B132PUNVHP-A	GE-132-MV-N	72269
99655	GE228MVPS-A	GE228MVPS-MC	68993
47536	B228PUNV-C0G1C	GE228MVPS-A	99655
47546	GE232MAX-L-42T	GE232MAX-L-42T	72274
47547	GE432MAX-L-42T	GE432MAX-L-42T	71726
47549	GE332MAX-H-42T	GE332MAX-H-42T	71715
47550	GE432MAX-H-42T	GE432MAX-H-42T	71724
49706	GE132MAX-L/ULTRA	GE132MAX-L/ULTRA	72258
49707	GE232MAX-L/ULTRA	GE232MAX-L/ULTRA	72262
49708	GE332MAX-L/ULTRA	GE332MAX-L/ULTRA	71717
49709	GE432MAX-L/ULTRA	GE432MAX-L/ULTRA	71725
49771	GE132MAX-N/ULTRA	GE132MAX-N/ULTRA	72259
49772	GE232MAX-N/ULTRA	GE232MAX-N/ULTRA	72262
49773	GE332MAX-N/ULTRA	GE332MAX-N/ULTRA	71719

Prod Code	Description	Suggested Replacement	Prod Code
49774	GE432MAX-N/ULTRA	GE432MAX-N/ULTRA	71727
49775	GE232MAX-H/ULTRA	GE232MAXP-H/ULTRA	73190
49776	GE332MAX-H/ULTRA	GE332MAX-H/ULTRA	71714
49777	GE432MAX-H/ULTRA	GE432MAX-H/ULTRA	71723
71281	GE232MAX-N/AMP	GE232MAX-N/AMP	72264
71424	GE332-MVPS-HSL84	GE332-MVPS-H-84TS	72753
71425	GE432-MVPS-HSL42	GE432MVPS-H-42T	74477
71426	GE432MAX-HSL84T	GE432MAX-H-42T	71724
71502	GE632MAXH90-S60T	GE632MAX90-S60	71497
71714	GE332MAX-H/ULTRA	GE332MAX-H/ULTRA	78619
71715	GE332MAX-H-48T	GE332MAX-H-48T	78620
71717	GE332MAX-L/ULTRA	GE332MAX-L/ULTRA	78621
71718	GE332MAX-L-48T	GE332MAX-L-48T	78622
71719	GE332MAX-N/ULTRA	GE332MAX-N/ULTRA	78623
71721	GE332MAX-N-48T	GE332MAX-N-48T	78624
71725	GE432MAX-L/ULTRA	GE432MAX-L/ULTRA	78625
71726	GE432MAX-L-48T	GE432MAX-L-48T	78626
71727	GE432MAX-N/ULTRA	GE432MAX-N/ULTRA	78627
71729	GE432MAX-N-42T	GE432MAX-N	78628
71732	GE632MAXH90-V60T	GE632MAX90-V60	71731
72260	GE132MAX-N-DIY	NA	
80136	B332I347HP	GE332-N-347	74105
80148	B259I120RHH	NA	
80149	B259I277RHH	NA	
80162	B295SR120HP	GE296HO-MV-N	75671
80163	B295SR277HP	GE296HO-MV-N	75671
80277	B332I347HPL 347	NA	
80353	B132R120V5	GE132MVPS-N-V03	75379
80355	B232SR120V5	GE232MVPS-N-V03	75380
80356	B232SR277V5	GE232MVPS-N-V03	75380
80357	B332SR120V5	GE332MVPS-N-V03	75381
80358	B332SR277V5	GE332MVPS-N-V03	75381
80362	B232SR277S50	GE232MAX90-S60	73233
80630	480XLHTCP-CON 120	GE296HO-MV-N	75671
80631	487XLHTCP-CON	GE296HO-MV-N	75671
80633	487SLHTCP-CON	GE296HO-MV-N	75671
80635	822BRTCP-CON	GE-260-IS-MV-N	74474
80637	420LTCP-CON	GE-240RS-MV-N	74472
80640	447LRVLHTCP-CON	GE-240RS-MV-N	74472
80644	GEM230RS120DIY	GE-240RS-MV-N DIY	74473
80664	493B2	NA	
80669	C213UNVBE-IP	GEC213-MVPS-SE	71429
80671	C213UNVBES-IP	GEC213-MVPS-BES	71428
80672	C213UNVSE-IP	GEC213-MVPS-SE	71429
80673	C218UNVBEIP	GEC218-MVPS-SE	71433
80677	C218UNVBES-IP	GEC218-MVPS-BES	71432
80679	C218UNVSE-IP	GEC218-MVPS-SE	71433
80680	C240SI120RH-IP	GEC240MAX-A	71435
80681	C240SI277RH-IP	GEC240MAX-A	71435
80683	C240PUNVHP-B-IP	GEC240MVPS-A	75950
80685	C2642UNVBE-IP	GEC226-MVPS-SE	71444
80687	C2642UNVBES-IP	GEC226-MVPS-BES	71443
80689	C2642UNVSE-IP	GEC226-MVPS-SE	71444
80690	C340SI120RH-IP	GEC340MAX-A	71436
80691	C340SI277RH-IP	GEC340MAX-A	71436
80824	480XLHTCP-DIY	GE296HO-MV-N	75671
86071	200CSP-IP	GE-240RS-MV-N	74472
86073	200H2-IP	GE-240RS-MV-N	74472
86078	202BTCP-IP	GE-240RS-MV-N	74472
86080	202SBTCP-IP	GE-240RS-MV-N	74472
86085	213TCP-IP	GE-260-IS-MV-N	74474
86101	412LSLHTCP-IP	GE-240RS-MV-N	74472
86105	413CTCP-IP	GE-240RS-MV-N	74472

Prod Code	Description	Suggested Replacement	Prod Code
86110	420LTCP-IP	GE-240RS-MV-N	74472
86123	443LSLHTCP	GE-240RS-MV-N	74472
86124	GEM240RS277IP	GE-240RS-MV-N	74472
86132	445RSWSTCP-IP	GE240RS120	97498
86137	446LSLHTCP	GE-240RS-MV-N	74472
86139	GEM240RS120IP	GE-240RS-MV-N	74472
86144	447LRTCP-IP	GE-240RS-MV-N	74472
86158	458LSLHTCP-IP	GE-240RS-MV-N	74472
86164	GEM296HORS120IP	GE296HO-MV-N	75671
86167	480XLHTCP-IP	GE296HO-MV-N	75671
86171	GEM296HORS277IP	GE296HO-MV-N	75671
86173	487XLHTCP-IP	GE296HO-MV-N	75671
86176	490XLHTCP-IP	GE296HO-MV-N	75671
86185	502ATCP-IP	GE232MVPS-N-VO3	75380
86206	532BRTCP-IP	GE-260-IS-MV-N	74474
86208	537LTCP-IP	GE-240RS-MV-N	74472
86222	546BTCP-IP	GE140RS120	75672
86231	548H2-IP	NA	
86240	554LTCP-IP	NA	
86243	562LTCP-IP	NA	
86245	564LTCP-IP	GE-240RS-MV-N	74472
86251	573LTCP-IP	GE-240RS-MV-N	74472
86253	588LTCP-IP	GE-240RS-MV-N	74472
86264	627LHTCP-IP	GE296HO-MV-N	75671
86287	697LTCP-IP	GE-240RS-MV-N	74472
86341	GEM240RS220IP	NA	
86351	798XLHTCP-IP	GE296HO-MV-N	75671
86359	806SLHTCP	GE-260-IS-MV-N	74474
86360	GEM296IS120IP	GE-260-IS-MV-N	74474
86372	GEM196IS120IP	GE-260-IS-MV-N	74474
86378	827SLHTCP	GE-260-IS-MV-N	74474
86379	GEM296IS277IP	GE-260-IS-MV-N	74474
86381	GEM196IS277IP	GE-260-IS-MV-N	74474
86396	881BRTCP-IP	GE-260-IS-MV-N	74474
86402	930KTCP-IP	NA	
86411	937KTCP-IP	NA	
86430	957STCP-IP	NA	
86432	960VLHTCP-IP	NA	
86519	H100MLTAC3M500K	GEM100MLTLC3D-5	86675
86527	H175MLTAC3M500K	GEM175MLTAC3-5	86741
86542	H400MLTAC4M500K	GEM400MLTAA4-5	72149
86624	2BMB1000C	NA	
86808	M400ML5AC4M500K	GEM400ML5AA4-5	72300
86814	M400MLTAC4M500K	GEM400MLTAA4-5	72149
86968	P320TRIAC4M502K	GEP320MLTAC4-5	86959
87175	S400MLTAC5M500K	GES400ML5AC4-5	87215
87206	S40048TAC5M500K	GES40048TAC4-5	87198
87217	S400ML5AC5M500K	GES400ML5AC4-5	87215
87621	GE-454-MV-PS-NL	GE454MVPS90-G	73192
87634	GEM1CF579PH277	NA	
72279	GE254MVPS-D	GE254MVPS-D-1	33957
87666	GE-254-MV-PS-NLB	GE254MVPS-D	72279
87700	GEM2CF24PH277	NA	
88918	USB-0218-16-IP	NA	
88931	USB-0816-14-IP	GESB-620-24-IP	72104
88934	USB-1632-24-IP	GESB-2040-46-IP	72107
88936	USB-1024-14-IP	GESB-1224-24-IP	72105
89707	GEM240RS120DIY72	GE240RS120-DIY	97499
89708	GEM296IS120DIY48	GE-260-IS-MV-N-DIY	74475
89709	GEM140RS120DIY	GE140RS120-DIY	72110
89710	GEM240HRS120DIY	GE240RS120-DIY	97499
89714	GEM140HRS120DIY	GE140RS120-DIY	72110
89716	445RSWSTCP-DIY	GE240RS120-DIY	72110

Prod Code	Description	Suggested Replacement	Prod Code
89723	213TCP-DIY	GE-260-IS-MV-N-DIY	74475
89724	458LSLHTCP-DIY	GE240RS-MV-N-DIY	74473
89725	532BRTCP-DIY	GE-260-IS-MV-N-DIY	74475
89726	487SLHTCP-DIY	GE296HO-MV-N-DIY	72109
90019	GE259MAX-N/CTR	NA	
96717	GE232-MVPS-N-42T	GE-232-MVPS-N	96714
96718	GE332-MVPS-N-42T	GE-332-MVPS-N	96715
96719	GE432-MVPS-N-42T	GE-432-MVPS-N	96716
97656	GE232MAX-N/CTR	GE232MAX-N/CTR	72265
97657	GE332MAX-N/CTR	GE332MAX-N/CTR	71720
97658	GE432MAX-N/CTR	GE432MAX-N/CTR	71728
97709	GE-232MV-N-DIY	GE-232MV-N-DIY	72277
97713	GE332MAX-HSL84T	GE332MAX-HSL84T	72752

Product Warranty

GE
Lighting

Light your world with a brand you can trust—GE.

GE has been a leader in innovative lighting technologies for over 100 years. Our name on the label is virtually synonymous with dependable, efficient, high-quality products—and that is why we are totally confident in the system performance and reliability of our lamps and ballasts. Also it is why we are willing to back them with a limited warranty that provides excellent coverage against defects in materials and workmanship.

If your GE lamp or ballast, when installed and used properly, fails during its warranty period because of defects in materials or workmanship, our warranties provide for purchase price credits or replacement. Of course, every lamp, ballast and system is different and warranty details vary, so check the individual warranty for your product at www.gelighting.com/warranty.

System Limited Warranty
(See the GE Lighting System and Ballast Limited Warranty at **www.gelighting.com/warranty** for full details and specific lamp cycle requirements.)

GE Lamps Operating on GE Ballasts

		Lamp Warranty[2]		Electronic Ballast Warranty[3, 5]	Electromagnetic Ballast Warranty[5]
Compact Fluorescent Lamp[4]		**When Operated on GE Programmed Rapid-Start Ballasts**	**When Operated on GE Instant-Start Ballasts**		
Double Biax®: 13-, 18-, 26-watt: "DBX" (4-pin base types only)		2 years	–	5 years	–
Triple Biax®: 13-, 18-, 26-, 32-, 42-watt "TBX"		2 years	–	5 years	–
High-Output Biax®: 57-watt and 70-watt "QBX"		2 years	–	5 years	–
High Lumen Biax® 27 W and 39 W		1 year	–	5 years	–
High Lumen Biax® 55 W[6]		2 years	–	5 years	–
High Lumen Biax® Watt-Miser® 25 W (F40/25BX)		3 years	2.5 years	5 years	–
High Lumen Biax® 40 W (F40/30BX)		2 years	1 year	5 years	–
Linear Fluorescent Lamp[1,4]		**When Operated on GE Programmed Rapid-Start Ballasts**	**When Operated on GE Instant-Start Ballasts**	**Electronic Ballast Warranty[3, 5]**	**Electromagnetic Ballast Warranty[5]**
F17T8/XL, F25T8/XL, F32T8 (SP, SPP & SPX)		3 years	2.5 years	5 years	2 years
F17T8/XL/WM, F25T8/XL/WM		3 years	3 years	5 years	2 years
F28T8/XL/SPP, F32T8/25W/SPP, F32T8/XL (SP & SPX)		4 years	3 years	5 years	2 years
F32T8/XL/HL		4 years	4 years	5 years	2 years
F28T8/XL/SPX, F32T8/SXL, F32T8/25W/SPX		5 years	4 years	5 years	2 years
F28T8/SXL, F32T8/25W/SXL		7 years	5 years	5 years	2 years
F96T8, F96T8/HO		–	2 years	5 years	–
F96T8/XL (SP, SPP & SPX); F96T8/XL/WM; F96T8/XL/WMP; F96T8/54W/SPP; F96T8/49W (SPP & SPX)		–	3 years	5 years	–
F28WT5/HL		3 years	–	5 years	–
F14T5/WM, F21T5/WM, F28T5/WM, F35T5/WM		3.5 years	–	5 years	–
F14T5HE, F21T5HE, F28T5HE, F35T5HE, F54T5/47W, F24T5HO, F39T5HO, F54T5HO, F80T5HO, F54T5/WM		4 years	–	5 years	–
F54T5/XL		5 years	–	5 years	–
HID High Watt Lamps[4]		**When Operated on GE Ballasts**		**Electronic Ballast Warranty[3, 5]**	**Electromagnetic Ballast Warranty[5]**
CMH® ConstantColor® SPXX: 250-, 320-, 350-, 400-watt		1 year	–	5 years	2 years
PulseArc®: 250-, 320-, 350-, 400-watt		1 year	–	5 years	2 years
HID Low Watt Lamps[4]	**Wattage/Type**	**When Operated on GE Ballasts**		**Electronic Ballast Warranty[3, 5]**	**Electromagnetic Ballast Warranty**
CMH® PAR	PAR20, PAR30L, PAR38, PAR64	6 months	–	5 years	–
CMH® MR16	All	6 months	–	5 years	–
CMH® GU6.5	All	6 months	–	5 years	–
CMH® G8.5	20 W	6 months	–	5 years	–
	39 W, 70 W	1 year	–	5 years	–
CMH® G12	20 W, 150 W	6 months	–	5 years	–
	39 W, 70 W	1 year	–	5 years	–
CMH® Double-ended	All	1 year	–	5 years	–
CMH® Elliptical	70 W	1 year	–	5 years	–
	150 W	9 months	–	5 years	–
	100 W	6 months	–	5 years	–

Visit www.gelighting.com/warranty for all warranty provisions and details
[1] Includes GE covRguard® lamps
[2] After date of purchase
[3] Contingent upon maximum rated case temperature; 36 or 60 months as specified on www.gelighting.com
[4] Linear fluorescent and compact fluorescent operating at 4,000 hours per year, high intensity discharge at 5,000 hours per year.
[5] From date of manufacture
[6] Applies to F55BX lamps rated at 20,000 hours life

Ballast Remedy: GE will, at its option, either (1) provide a credit to Purchaser equal to the current price GE charges Purchaser for the ballast, or (2) provide a free replacement ballast to Purchaser. GE reserves and has the right to examine failed lamps and/or ballasts to determine the cause of failure and patterns of usage.

Index

Index (cont.)

Index (cont.)

Index (cont.)

Index (cont.)

Index (cont.)

Index (cont.)

Index (cont.)

Index (cont.)

Index (cont.)

Index (cont.)

Index (cont.)